भारत हेवी इलेक्ट्रिकल्स लिमिटेड / **BHARAT HEAVY ELECTRICALS LIMITED**

(A Government of India Undertaking) | Heavy Power Equipment Plant, Ramachandrapuram, Hyderabad – 502 032

GT PURCHASE DEPARTMENT

SPECIAL CONDITIONS OF CONTRACT (SCC) AND SCHEDULE OF REQUIREMENTS

Enquiry No.	R7G1Z71020 and R6AZX00001
Item	Electrically Operated Guillotine Damper (Frame 6B) with Mandatory Spares and Supervision of Erection & Commissioning
Project / Site	8 x Frame 6B – DPRP Expansion Project (DEP), Dangote, Lekki Free Trade Zone, Lagos, Nigeria
Attachments	1. Instructions To Bidder (ITB-Rev-19) 2. Price Bid Format

1. SCHEDULE OF REQUIREMENTS

BHEL REQUIREMENTS											SUPPLIER CONFIRMATION (Refer Clauses 2 to 6)		
Enq Sl No.	**Purchase Requisition**	**Item**	**Qty**	**MU**	**Material Code**	**Description**	**Consol. Qty**	**Spec No. / Rev**	**Spec and Scope of Supply**	**Delivery Date Reqd at BHEL Hyderabad Stores**	**Confirmation to Spec & Scope of Supply (Clauses 3, 4 & 5)**	**Confirmation on Make (YES / NO / NOT APPLICABLE)**	**Delivery Period in Weeks from Date of PO**
1	1900170928	10	1	EA	GT9754277117	ELECTRIC OPER GUILOTINE DAMPER-FR6B	1	GT54277-11	As per Clause 3 (Scope of Supply) and Clause 4 (Unit-Wise Delivery & Identification Requirements)	Nov '27			
2	1900170926	10	1	EA	GT9754277117	ELECTRIC OPER GUILOTINE DAMPER-FR6B	1	GT54277-11		Oct '27			
3	1900170970	10	1	EA	GT9754277117	ELECTRIC OPER GUILOTINE DAMPER-FR6B	1	GT54277-11		May '28			
4	1900170968	10	1	EA	GT9754277117	ELECTRIC OPER GUILOTINE DAMPER-FR6B	1	GT54277-11		Apr '28			
5	1900170966	10	1	EA	GT9754277117	ELECTRIC OPER GUILOTINE DAMPER-FR6B	1	GT54277-11		Mar '28			
6	1900170964	10	1	EA	GT9754277117	ELECTRIC OPER GUILOTINE DAMPER-FR6B	1	GT54277-11		Feb '28			
7	1900170962	10	1	EA	GT9754277117	ELECTRIC OPER GUILOTINE DAMPER-FR6B	1	GT54277-11		Jan '28			
8	1900170960	10	1	EA	GT9754277117	ELECTRIC OPER GUILOTINE DAMPER-FR6B	1	GT54277-11		Dec '27			
9	1900171020	10	1	EA	GT9756940050	DP GAUGE USED IN GD SYSTEM (GT54277-11)	2	GT56940-05		10-06-2028			
10	1900171034	10	1	EA	GT9756940050	DP GAUGE USED IN GD SYSTEM (GT54277-11)		GT56940-05		13-07-2028			
11	1900171021	10	1	EA	GT9756940069	DP TRANSMITTER IN GD SYSTEM (GT54277-11)	2	GT56940-06		10-06-2028			
12	1900171035	10	1	EA	GT9756940069	DP TRANSMITTER IN GD SYSTEM (GT54277-11)		GT56940-06		13-07-2028			
13	1900171022	10	1	SET	GT9756940077	ACTUATOR(MOV) USED IN GD SYSTEM	2	GT56940-07		10-06-2028			
14	1900171036	10	1	SET	GT9756940077	ACTUATOR(MOV) USED IN GD SYSTEM		GT56940-07		13-07-2028			
15	1600035652	10	1	AU	NA	SUPERVISION OF ERECTION AND COMMISSIONING OF GUILLOTINE DAMPER (GT14074)	1	GT14074 Rev 00	As per Spec GT14074 Rev 00 and Clause 5 (Special Conditions for Supervision of	One month prior intimation will be given by BHEL Purchase for			
16	1600035653	10	1	AU	NA	SUPERVISION OF ERECTION AND COMMISSIONING OF GUILLOTINE DAMPER (GT14074)	1	GT14074 Rev 00					
17	1600035616	10	1	AU	NA	SUPERVISION OF ERECTION AND COMMISSIONING OF GUILLOTINE DAMPER (GT14074)	1	GT14074 Rev 00					

भारत हेवी इलेक्ट्रिकल्स लिमिटेड / **BHARAT HEAVY ELECTRICALS LIMITED**

(A Government of India Undertaking) | Heavy Power Equipment Plant, Ramachandrapuram, Hyderabad – 502 032

GT PURCHASE DEPARTMENT

SPECIAL CONDITIONS OF CONTRACT (SCC) AND SCHEDULE OF REQUIREMENTS

18	1600035617	10	1	AU	NA	SUPERVISION OF ERECTION AND COMMISSIONING OF GUILLOTINE DAMPER (GT14074)	1	GT14074 Rev 00	5 (Special Conditions for Supervision of Erection & Commissioning)	Purchase for deputation of Service Engineer to site (refer Clause 5)			
19	1600035618	10	1	AU	NA	SUPERVISION OF ERECTION AND COMMISSIONING OF GUILLOTINE DAMPER (GT14074)	1	GT14074 Rev 00					
20	1600035619	10	1	AU	NA	SUPERVISION OF ERECTION AND COMMISSIONING OF GUILLOTINE DAMPER (GT14074)	1	GT14074 Rev 00					
21	1600035690	10	1	AU	NA	SUPERVISION OF ERECTION AND COMMISSIONING OF GUILLOTINE DAMPER (GT14074)	1	GT14074 Rev 00					
22	1600035691	10	1	AU	NA	SUPERVISION OF ERECTION AND COMMISSIONING OF GUILLOTINE DAMPER (GT14074)	1	GT14074 Rev 00					

2. BASIS OF EVALUATION

Sl.	Description	Supplier Confirmation (YES / NO / NOT APPLICABLE)
1	The tender shall be finalized on L1 landed cost on lump sum basis on FOB MUMBAI (with container, packing & preservation in supplier's scope).	YES

3. SCOPE OF SUPPLY – APPLICABLE SPECIFICATIONS AND DOCUMENTS (Clause A)

Sl.	Description	Supplier Confirmation (YES / NO / NOT APPLICABLE)
1	GT54277-Rev 17 – Main Guillotine Damper Ordering Specification	
2	GT55484-Rev 00 – GD-Electrical, C&I Specification	
3	GT56940-Rev 00 – Mandatory Spares	
4	GT14074-Rev 00 – Specification for Supervision of Erection & Commissioning of Guillotine Damper	
5	GT14024-Rev 03 – Packing, Preservation and Shipping Instructions including Containerization Requirements	
6	23650261001 Rev 02 – Guillotine Damper Interface Drawings	
7	HY0490563 – Preservation Specification	

4. UNIT-WISE DELIVERY AND IDENTIFICATION REQUIREMENTS (Clause B)

Sl.	Description	Supplier Confirmation (YES / NO / NOT APPLICABLE)
1	As the order is for 8 units, the supplier shall ensure that all items pertaining to each individual unit, including the main assembly, associated loose items, accessories, and spares, are delivered together as one complete unit-wise consignment.	
2	Partial or incomplete delivery of items pertaining to any individual unit, or mixing of items belonging to different units, shall not be permitted.	
3	The supplier shall ensure proper unit-wise identification, segregation, containerization, packaging, marking, and documentation in accordance with GT14024, so as to maintain complete traceability of all items pertaining to each individual unit throughout packing, dispatch, receipt, and subsequent installation.	

5. SPECIAL CONDITIONS FOR SUPERVISION OF ERECTION AND COMMISSIONING (Spec GT14074 Rev 00) – Clause C

Sl.	Description	Supplier Confirmation (YES / NO / NOT APPLICABLE)
1	Site: DPRP Expansion Project (DEP), Lekki Free Trade Zone, Lagos, Nigeria. Scope covers supervision of erection and commissioning of guillotine dampers for 8 units (Var. No. 01).	
2	The lump sum price at Sl. No. 5 is for 21 working days at site per unit, excluding onward and return travel days, and shall include visa processing, service charges, local transportation, food expenses and insurance. Only this lump sum price will be considered for L1 evaluation.	
3	Overseas / international medical insurance of the service representative is in the L1 supplier's scope.	

SPECIAL CONDITIONS OF CONTRACT (SCC) AND SCHEDULE OF REQUIREMENTS

4	Per diem charges apply only if the stay extends beyond 21 working days, from the day the supervisor reaches site up to the day he leaves site. No per diem is payable for travel days. Per diem rates shall exclude to-and-fro air tickets.	
5	To-and-fro economy class air tickets from the nearest international airport in India to Lagos, Nigeria, and suitable accommodation within or near the site, will be arranged or reimbursed at actuals by BHEL. These shall not be included in the quoted price.	
6	BHEL Purchase will intimate the supplier one month prior to mobilization of the service representative.	
7	On receipt of the intimation, the supplier shall share the service representative's details, travel plan, passport copy, medical fitness certificate and international insurance details with BHEL Purchase.	
8	Payment will be released at actuals against actual man-days at site, as certified by the BHEL site engineer.	
9	Any services required for proper installation and safe, reliable operation of the guillotine damper shall be identified and provided by the supplier	
10	The supplier shall be solely responsible for its service representative from entry into the country / site until exit after completion of the service job and return to the supplier's location. The supplier shall be fully responsible for any illegal or abnormal activities of its representative during this period. An undertaking letter to this effect shall be submitted along with the quotation; otherwise, the signed tender documents shall be deemed as acceptance of this condition.	

6. GENERAL NOTES

Sl.	Description	Supplier Confirmation (YES / NO / NOT APPLICABLE)
Note 02	All tests as per Spec/Drgs are deemed as confirmed unless specific deviations are taken.	
Note 03	Drawings/catalogues/model nos. etc. shall be enclosed with the bid by the vendor.	
Note 04	In case BHEL Spec/Drg No./GE Part No. & Make Model No. (as applicable) are not confirmed, BHEL reserves the right to reject the offer without further correspondence/notice.	
Note 05	Prices should be quoted only in the Price Bid format.	
Note 06	Against each clause of NIT, vendor has to provide their confirmation. If nothing is mentioned, it will be deemed as confirmation by vendor.	

	Inspection:												
	Indegenous vendors: Third Party Inspection Vendor should book inspection call to the agency through http://cqir.bhel.in , at least 10 days in advance for arranging inspection. Charges for inspection will be paid by BHEL. The name of the agency will be indicated in the purchase order (PO).Vendor to intimate by email to BHEL Purchase Department regarding inspection call with proof of web booking for verification. Customer Inspection: In case customer inspection is applicable (Stage/ Final) apart from BHEL/ BHEL appointed Third Party, vendor shall be informed accordingly.												
	Foreign vendors: Test and Inspection Certificates : Normally, 3rd party inspection is not envisaged, hence, vendor to furnish Test and Guarantee Certificates as per Specification/ QAP.												

भारत हेवी इलेक्ट्रिकल्स लिमिटेड / **BHARAT HEAVY ELECTRICALS LIMITED**

(A Government of India Undertaking) | Heavy Power Equipment Plant, Ramachandrapuram, Hyderabad – 502 032

GT PURCHASE DEPARTMENT

SPECIAL CONDITIONS OF CONTRACT (SCC) AND SCHEDULE OF REQUIREMENTS

	Foreign vendors : Please confirm to submit the NO-PE Certificate (if not already submitted) if PO is placed .Else, Please furnish the Tax withholding Certificate from the Income Tax Dept of India . This is required to make the payment to you through the BANK as per the changes in the TDS Provisions - brought out in the Indian Finance Act 2015 .Due to this the signed "No PE Certificate " document is mandatory . Format is enclosed herewith. Kindly expedite sending the scanned copy of NO-PE Certificate . Please treat the matter important. You may please send us the Original by courier in due course. A business connection in India is defined as any business activity carried out through a person who, acting on behalf of the non-resident (read "your company"), 1. has power to conclude contracts on behalf of the non-resident or 2. if he doesn't have the power, maintains stock of goods in India on behalf of the non-resident from which he delivers the goods to the non-resident's customers or 3. secures orders in India for the non-resident. To clarify on the above, specific exemption is given to any activity carried out through the following in normal course of business: a. broker b. commission agent c. or any agent having independent status To summarise, even if your company does have any agent, broker or even Indian subsidiary who don't have the power to conclude contracts on behalf of your company, it is not a business connection. We will be glad to provide any clarification / help / advise you may need in this regard.			
Note 06	Against each clause of NIT, vendor has to provide their confirmation. If nothing is mentioned, it will be deemed as confirmation by vendor.			

BIDDER'S DECLARATION

We confirm that we have read and understood all the above Special Conditions of Contract and accept them without any deviation, except as specifically stated in our deviation schedule.

Signature	
Name & Designation	
Company Name	
Date	
Stamp / Seal	

Annexure -I

SL No	Terms & Conditions	Supplier confirmation (YES/ NO/NOTED / NA)	
1	For complete techno-commercial conditions of the tender, vendors are requested to refer to the following documents:		
2	**Delivery Period :**		
	Supplier to indicate delivery period in terms of no. of Weeks from the date of PO. **Delivery is the essence of contract**. BHEL reserves the right to reject offers with unsuitable delivery.		
3	**Inspection:**		
3a	**Indegenous vendors: Third Party Inspection**		
3b	**Foreign vendors: Test and Inspection Certificates :**		
4	**Foreign vendors : Please confirm to submit the NO-PE Certificate** (if not already submitted) if PO is placed .Else, Please furnish the Tax withholding Certificate from the Income Tax Dept of India . This is required to make the payment to you through the BANK as per the changes in the TDS Provisions - brought out in the Indian Finance Act 2015 .Due to this the signed "No PE Certificate " document is mandatory . Format is enclosed herewith. Kindly expedite sending the scanned copy of NO-PE Certificate . Please treat the matter important. You may please send us the Original by courier in due course. A business connection in India is defined as any business activity carried out through a person who, acting on behalf of the non-resident (read "your company"), 1. has power to conclude contracts on behalf of the non-resident or 2. if he doesn't have the power, maintains stock of goods in India on behalf of the non-resident from which he delivers the goods to the non-resident's customers or 3. secures orders in India for the non-resident. To clarify on the above, specific exemption is given to any activity carried out through the following in normal course of business: a. broker b. commission agent c. or any agent having independent status To summarise, even if your company does have any agent, broker or even Indian subsidiary who don't have the power to conclude contracts on behalf of your company, it is not a business connection. We will be glad to provide any clarification / help / advise you may need in this regard.		

Special Conditions of Contract (SCC)
AS PER ITB 19

Sl.No	ITB Clause	Clause	Available Options	BHEL requirements		Bidder response
				Indegenous Supplier	Foreign Supplier	
1	3	Mode of Submission	Conventional / E-Procurement	Conventional E mail	Conventional E mail	
2	5	Type of Bid	Single part / Two Part / Three Part	Two Part	Two Part	
3	6	Indigenous purchase - Destination	BHEL, RCPuram, Hyderabad / Site	FOB MUMBAI (With Container, packing & preservation in supplier scope)		
4			Destination in case of Site		NA	
		Mode of Shipment	FCA Air / CIP Sea	FOB MUMBAI (With Container, packing & preservation in supplier scope)		
5		Imports purchase - Destination	Mumbai / Navasheva / Hyderabad / Others			
6		Freight	Customer / BHEL / Vendor	vendor	Not applicable	
7		Insurance	Customer / BHEL / Vendor	vendor	Not applicable	
8		Basic Custom Duty	Project Imports/ Concessional Duty / Merit Duty / Nil / Others	Not applicable	Merit Duty	
			_____Duty Structure	Not applicable		
9	9	Price validity	_____ days	90 days	90 DAYS	
		Optional Spares price validity	_____ Months / years from the date of _____	Not applicable	Not applicable	Not applicable
10	8	Delivery Period	___ weeks / ___ Months (Staggered delivery to be detailed)	staggered delivery date		

11	18	Evaluation basis	Itemwise / Total	Lumpsum		
12	Others	Quantity Split	Splittable / Non-Splittable	Non-Splittable	Non-Splittable	
13			(Tabulation for splitting to be detailed)	Not applicable	Not applicable	Not applicable
14	9	Price Variation Clauser (PVC)	Applicable / Not applicable	Not applicable	Not applicable	Not applicable
15	12	Payments Terms		ITB CLAUSE 12 A	ITB CLAUSE 12 B	
16		Tender cost	Applicable / Not applicable	Not applicable	Not applicable	Not applicable
17		Earnest Money Deposit (EMD)	__% of tender value / Not applicable	Not applicable	Not applicable	Not applicable
19			If applicable , max 2% of Total contract value .	Not applicable	Not applicable	Not applicable
20		Bank Guarantee against milestone payment	(If envisaged to be detailed with %)	Not applicable	Not applicable	Not applicable
21	Others	Contract execution Bank Guarantee	__% of PO Value to be submitted after receipt of PO / Not Applicable	Not applicable	Not applicable	Not applicable
22	17	Performance Bank Guarantee	The successful Bidder must deposit Security Deposit 5% of the contract (Purchase Order) within 14 days from the issuance of purchase order. It should remain valid for a period of 60 (sixty) days beyond the date of completion of all contractual obligations of the supplier, including warranty obligations.	ReferAnnexure-A and Annexure-VII For mode of submission & other details		
	7	Additional documentation for payment	Test / Warranty / Guaranty / O&M Manual etc.,	TPI/CQIR,TC,GC,WC	Test / Warranty / Guaranty , etc.,	
24	13	Max Penalty applicable on	Delayed portion / Order value	Order value		
25	Others	Contract Specific Penalty Clause	including Documentation delay , Performance , E&C	Not applicable	Not applicable	Not applicab
26	16	Guarantee / Warranty Period	Applicable Clause a/b/c	Applicable	Applicable	
27		Contract Specific Guarantee / Warranty Period	Specific period if any to be detailed	Not applicable	Not applicable	Not applicable
28	Others	Expected commissioning period	___ months from the date of supply	Not applicable	Not applicable	Not applicable
29	48	Detailed Billing Breakup (BBU)	Applicable / Not applicable	NOT Applicable	NOT Applicable	
30			(If applicable , Bidder shall provide detailed billing break-up in respect of the major items/components (stipulated in the tender) as part of offer)	NOT Applicable	NOT Applicable	
31	Others	Customer approval of vendor	Applicable / Not applicable	Not applicable	Not applicable	Not applicable
32		Drawing approval	Applicable / Not applicable	Applicable	Not applicable	
33		QAP approval	Applicable / Not applicable	Applicable	Not applicable	
34	36	Inspection by	BHEL / BHEL TPI / Vendor TPI / Customer	BHEL TPI	Not applicable	
35	Others	Financial / Commercial PQC	Applicable / Not applicable	Not applicable	Not applicable	Not applicable
36			if Applicable to be detailed	Not applicable	Not applicable	Not applicable
Signature						
Name						
Vendor Stamp /Seal						

(Attachment to Enquiry No. XXXXXXXXXX Due on Date XX.XX.XXXX for submission by 11.00 hrs to open from 14.00 hrs.)

INSTRUCTIONS TO BIDDER (ITB)

NOTE: Bidder to confirm in affirmative by typing "YES" or "Applicable Data" in the response column. Deviations, if any shall be recorded in deviations/comments column (Separate sheet can be attached if needed). Non deviatable clauses are indicated as "NON DEVIATABLE".

Sl. No.	DETAILED TERMS & CONDITIONS	BIDDER RESPONSE (YES/NO)	DEVIATIONS / COMMENT
1	**SCOPE OF SUPPLY:**		
	Signed & Sealed offers are invited for the Scope of Supply of goods or services or both as detailed in the enquiry. Relevant enclosures/supporting documents / catalogue, if any shall be enclosed to the technical offer.		
2	**DEFINITIONS**		
A	'The Buyer' means BHEL-HPEP, Ramachandrapuram, Hyderabad-502 032 of Bharat Heavy Electricals Limited (A Govt. of India Undertaking) incorporated under the companies Act having its registered office at BHEL House, Siri fort, New Delhi-110049, India and shall be deemed to include its successors and assigns. It may also be referred to as BHEL.		
B	'The Bidder' means the persons, firm, company or organization on whom the Purchase order is placed and shall be deemed to include the bidder's successors, representatives, heirs, executors and administrator as the case may be. It may also be referred to as Contractor, supplier or bidder.		
C	'Contract' shall mean and include the Purchase order incorporating various documents viz., Notice Inviting Tender (NIT), Offer, Letter Of Intent/Acceptance (LOI/LOA), Instruction to Bidders (ITB) and Special Conditions of Contract (SCC), specifications, inspection/quality plan, schedule of prices and quantities, drawings, if any, enclosed by Bidder/ provided by the Buyer or his authorized nominee and the samples or patterns if any to be provided under the provision of the contract. In case of any inconsistency or contradiction between any of the documents, the order of precedence shall be Purchase Order, LOI/LOA followed by Minutes Of Meeting (MOM), NIT, SCC, ITB.		
D	'Parties to the contract' shall mean the bidder and the buyer as named in the main body of the Purchase Order.		
E	'Goods/Material' shall include Works and Services which are incidental or consequential to supply.		
3	**GENERAL INSTRUCTIONS:**		
A	Mode of submission of offer shall be as indicated in SCC		**Non Deviatable**
B	The quotation should be neatly typed and free from over writing/ erasures. Any correction or addition must be authenticated. The offer including annexures and brochures should be submitted in English / Hindi. All Pages of Techno Commercial Bids (Main Pages), ITB, SCC should be signed and Stamped. If there is a conflict in case of bilingual submission, the submission in English will be final. Prices shall be quoted both in figures and words. In case of any discrepancy in value, the prices quoted in words shall be considered for evaluation and establishing L1 Status. Any discount / revised offer / bids submitted by a bidder on his own shall be considered, provided it is received on or before the due date and time of offer / bid submission (Part-1). Conditional discounts shall not be considered for evaluation of tenders.		**Non Deviatable**
C	Incomplete offers are liable for rejection.		**Non Deviatable**
D	Bidders to please note that the Terms & conditions contained in this document and SCC are to be read fully before submission of quotations.		**Non Deviatable**
E	Bidders are advised to comply with ITB and SCC, should there be any deviations (where deviations are permitted), it shall be entered in the deviation column. BHEL reserves the right to reject such offers or load the bid suitably for evaluation.		**Non Deviatable**
F	Offers shall be submitted directly, only by the bidder or by their authorized representative / agent and the offer should be in line with the regulatory guidelines (i.e. A valid Agency agreement between principal bidder and agent / representative shall be attached and the agreement shall cover the scope of services rendered by Agent, Agency Commission and any other information called for as per the regulatory guidelines). OEM / Mill details shall be provided if bidder is not a manufacturer. Bid envelops shall bear the name of Bidder. In case of submission through authorized representative/agent, the name of representative/agent should also be mentioned apart from bidder name.		**Non Deviatable**
G	Offer received after the specified time and date of submission will be rejected. No further correspondence shall be entertained.		**Non Deviatable**
H	Unsolicited offers will not be considered.		**Non Deviatable**
4	**OTHER PARTICULARS (Please indicate applicable data)**		
A	Name of the Bid currency (freely tradable foreign currency for imports and Indian Rupees for indigenous purchase).		
B	Name of the Port of loading and Port of Discharge (applicable to imports).		

5	**BID SUBMISSION PROCEDURE FOR CONVENTIONAL TENDER:**		
A	**For Single Part Bids:**		
	The complete bid shall be submitted in a single sealed cover superscribing the Tender number and due date, addressed to Sr DGM/CMM, 4th Floor Administrative Building, BHEL, Hyderabad and sent by appropriate mode to above address or dropped in tender box located at Admin II Gate on or before the specified time and date of submission of offers, preferably in the bidder's envelope. E- mail bids shall be sent to mail ID pricebid_hyd@bhel.in only as an attachment.		**Non Deviatable**
B.	**For two-Part Bids:**		
i	The offer is to be submitted in two parts viz., Techno-commercial Bid - (Part-I), with all technical specification & scope including bill of material etc., Earnest Money Deposit (EMD)(wherever applicable) and unpriced bid with all applicable Commercial Terms and Conditions, rates of agency commission, duties, taxes and other charges, Signed and Stamped ITB and SCC, except the price, shall be kept in a separate sealed cover, superscribing enquiry No. (Techno-Commercial Bid) and due date AND Price Bid (Part-II), containing ONLY the price (including agency commission, if any) and the applicable duties/taxes/other charges shall be kept in a separate sealed cover superscribing Enquiry no. (Price bid) & due date. Both the above covers (Part –I & II) shall be kept in a Third cover superscribing Enquiry no. & due date. Bidder can also submit offer through email. Technical offer to be submitted to mail ID technicalbid_hyd@bhel.in, and price bid to be submitted to mail ID pricebid_hyd@bhel.in only as an attachment. Interchanging the information in the mails may lead to rejection of the offer. Bidder shall have no claim on e-mail offers sent to any other e-mail ID. In case of e-mail offers, the mail subject should contain Enquiry Number, Due date and Bidder name. Bidder address including contact details shall be mentioned in the content of the mail. Without these details, the offer is liable for rejection. All techno commercial terms & conditions mutually agreed prior to price bid opening shall prevail and supersede any terms and conditions specified otherwise in price bid.		**Non Deviatable**
ii	The bidders whose bids are techno commercially not accepted will be informed and EMD shall be returned wherever submitted.		
iii	Bidders will be allowed to submit the impact on their quoted prices due to changes in technical scope, specifications, and commercial terms/conditions as specified in NIT which in the opinion of BHEL , warrant changes in prices.		**Non Deviatable**
C	Bids shall be opened on due time and date in the presence of bidders who may like to be present. Only one representative of each bidder shall be permitted to attend the bid opening. Only the price bids of bidder (in case of two part bid) whose techno commercial bids are accepted will be opened later on a specified date.		**Non Deviatable**
6	**DELIVERY TERMS**		
A	**Indigenous Purchase**		
	a. Terms of Delivery for dispatches to BHEL Hyderabad (HPEP) shall be FOR Destination. b. Terms of Delivery for Direct Dispatch (DD) items shall be Ex Works. i. Incase specified in SCC that insurance is in customer/BHEL scope, price quoted shall include Freight charges up to Destination. ii. Otherwise, price quoted shall include Freight and Insurance upto Destination. However, beneficiary for insurance shall be BHEL.		
B.	**Imports**		
	The goods shall be delivered on FCA capital airport basis in case of freight by Air and CIP basis in case of freight by Sea.		
7	**Documentation for Payment**		
A	**Indigenous Purchase**		
	Following documents shall be submitted immediately on dispatch of material to BHEL HPEP / Site a. Two numbers of Original Tax Invoice (Refer ITB clause no 11 for Tax Compliance)/ e-invoice of GST Portal if applicable) b. Packing List - clearly showing number of packages, gross weight and net weight. c. Test/Warranty/Guarantee certificates, O&M Manual (If specified in SCC) d. Insurance intimation/declaration certificate e. Pre-dispatch Inspection report /Third Party Inspection Certificates. f. Consignee copy of LR signed & stamped by Customer/Site representative for DD Items g. e-waybill h. Any other documents as specified in SCC.		**Non Deviatable**

B	Softcopies of the above documents shall be uploaded in SUVIDHA portal https://suvidha.bhel.in/suvidha/ or https://hpep.bhel.com/mm/main.jsp Vendor Bills tab. immediately after dispatch of the material. Upload of Documents is mandatory for material Entry. **Imports** i) Bidder shall inform BHEL the readiness of material along with packing details 30 days in advance from the date of delivery. For Hazardous cargo/DG cargo, supplier must provide the following documents prior to handing over shipment to freight forwarder, wherever freight is in BHEL scope: 1. Valid MSDS 2. DGD certificate with appropriate UN numbers. 3. Labelling and marking on DG cargo along with photo of packaging. 4. Self-declaration for consignment 5. Packaging Certificate as per DG Standards 6. TSA Approved Truckers details to be provided to forwarder at the time of shipment In addition to the above, supplier should ensure to comply all IATA DG regulations, if any new requirement is added in future. ii). Bidder shall also upload the soft copy of the dispatch documents consisting of BL / AWB, Invoice, delivery note, packing list, country of origin & Test certificates and other documents as specifically indicated in the SCC in PRADAN Portal (https://hpep.bhel.com/mm) within Five days from the B/L date for sea shipment and One day from AWB date for Air shipment and sent to email ids: mssea@bhel.in, msair@bhel.in, cmmfe@bhel.in. iii) AWB/BL must contain the information of BHEL GST no., and PAN no. iv) **Air Shipments:** Bidder shall ensure the following a) Port of discharge -- Mumbai/Chennai/Hyderabad (as indicated in SCC). b) Consignee shall be BHEL, Hyderabad. Material shall be air freighted through cargo mode only and not through Courier. c) Upon handing over the cargo to the forwarder, bidder shall ensure the acknowledgement receipt with wordings" Cargo handed over in sound condition for Air freighting". Note: Warehouse receipt will not be considered for penalty calculations. d) In case of CIF/ shipments, bidder shall also inform BHEL the information about discharge port agent details and cargo arrival information within one day from the date of Shipment. e) Following dimensions of single package may be noted. i). Maximum dimension of the cargo(ODC) -- 125" x 88" x 63" ii). Maximum weight of the cargo -- 3.5 MT. If any package dimension or weight exceeds the above set limits, it will be treated as Over Dimension Cargo (ODC) or Over Weight Cargo and bidder shall inform BHEL 30 days in advance to the delivery date to enable BHEL to finalize the freight forwarder. f). If package falls under Hazardous category, bidder shall communicate BHEL 30 days in advance period with document support. v) **Sea Shipments:-** bidder shall ensure the following a). Port of discharge -- Nhavaseva/Mumbai/Chennai. b). Place of Delivery / Final Destination for CIP shipments - Nhavaseva CFS / Chennai CFS. c). In case of FOB shipments, bidder shall handover the material to BHEL nominated forwarder and obtain the cargo receipt. d). If the material cannot be containerized in 20 or 40 GP containers, an advance information of 30 days prior to the delivery date shall be communicated to BHEL for necessary arrangements and finalisation of freight forwarder. e). **For CIP shipments** 1. In case of FCL shipments, Detention free period must be 14 days. 2. Bidder shall also inform BHEL the information about discharge port agent details and cargo arrival information within 5 days from the date of Shipment. 3. No charges for the services rendered till place of destination will be payable by BHEL. Incase liner / forwarder insist for charges, not in the scope of BHEL, the same will be adjusted from bidder account. 4. In case of CIF shipments -- Bidder must select a forwarder/liner whose discharge port published tariff for THC and other services is available. Any charges over and above the published tariff will not be borne by BHEL or will be adjusted from the bidder's bill. 5. bidder must insure the cargo for 110% of material value including the freight amount. (vi). Recovery charges for non-submission of documents: - Bidder shall submit all the required documents to BHEL as prescribed in the Purchase order and NIT.		

If BHEL incurs any charges such as Penalty, demurrage, container detention, wharfage, storage, Ground rent etc., due to non - compliance / non - submission of documents prescribed in Purchase Order/ NIT/Letter of credit, the same shall be recovered from the bidder as under:
1. EUROPE/USA/Black Sea/ Far East/Middle East/South East sector
A. **For FOB Sea Consignments:-**

Penalty for late submission / negotiation of documents beyond 14 days shall be as under:

Sl. no	Period (From Date of Bill of Lading)	Recoverable Charges	Recoverable Charges per day per container	
		LCL per week/ Break bulk cargo per day	20FT Container	40FT Container
i	Upto 14th day	Nil	Nil	Nil
ii	15th day onward	USD 10	USD 110	USD 200

B. **For CIP Sea Shipments: -**
Bidder shall provide rates for detention charges after free period at the time of offer itself in case of engagement of 20FT Container and 40FT category. In case of late presentation of documents to the bank recovery will be effected from the Bidder as per the rates quoted by the Bidder at the time of offer in this regard.
In case of Break bulk cargo and LCL, Demurrage charges shall be recovered at the rate of USD 1 per Ton per day and storage charges at the rate of USD 10 per week respectively shall be charged as late presentation charges.

(vii) Description of items in invoice, packing list, BL / AWB or LR shall be same as PO item description. Bidders shall ensure that invoice shall contain PAN nos. of both bidder and BHEL along with other tax related numbers. BHEL PAN AAACB4146P and BHEL TAN HYDB00086C Any other additional documents sought by the statutory authorities, the same shall be produced by the bidder on priority basis.
(viii) Bidder shall provide package details including number of packages, gross weight, net weight etc.

(ix) The bidder shall provide the following documents at the time of submission of offer:
a) No Business Connection in India declaration issued by the bidder as per the format specified. (or)
b) (i) No Permanent Establishment in India declaration issued by the bidder as per the format specified.
(ii) Tax Residence Certificate issued by the bidder's tax authorities.
(iii) Form 10F, as attached in Annexure V, to be issued by the bidder.
c) In case the bidder has a Business Connection in India as per Section 9 of Income Tax Act or significant economic presence in India as per rule 11 UD of IT Act or Permanent Establishment in India as per Article 5 of Double Taxation Avoidance Agreement between India and the bidder's country, the bidder shall provide a withholding tax order issued by the Indian Income Tax authority for recovery of applicable tax.

8	**Delivery Schedule**		
	The tendered goods shall be delivered within the period stipulated in NIT/ SCC as accepted. Inordinate delay/early supply are liable for rejection/Hold on payment.		**Non Deviatable**
9	**Pricing Terms**		
	Quoted price shall be inclusive of Packing & Forwarding and shall remain firm and valid during the execution of PO. Offers with PVC will be rejected outright except in cases where specifically called for in the SCC.		**Non Deviatable**
10	**PRICE VALIDITY :**		
	Unless otherwise specified, offer shall be valid for a period of 90 days from the date of bid opening (Technical bid /part-I in case of two part bid). However the prices quoted for spare parts of the Main equipment shall be kept valid for a period as specified in SCC.		**Non Deviatable**

11	**Taxes & Duties (RATE TO BE INDICATED by the bidder against the space provided)**		
A	**Indigenous Purchase** i) Only valid GST registered bidders will be considered for the tender. The GSTIN of the bidder should be clearly mentioned in the offer. ii) If bidder is exempted from GST registration under any provision of the GST Law, a declaration with due supporting documents should be furnished for considering the offer. iii) Bidder to quote the applicable taxes in the following manner: - Harmonized System of Nomenclature (HSN) of Goods - Services Accounting Code(SAC) of Services. - IGST/CGST/SGST/UTGST: Rate of Tax to be quoted as extra in % against the space provided iv) Bidders to ensure correct applicability of IGST/CGST/SGST/UTGST based on the Inter / Intra state movement of goods/services. v) In case Bidder has opted for GST Composition Scheme, the same may be stated explicitly both in their technical and price bids. An undertaking to the effect that any change in the status of the bidder will be intimated. vi) Any other taxes & duties not covered anywhere above may be indicated separately. **Taxes deducted at source:** - TDS as per the extant statutes shall be deducted. - In case bidder does not provide PAN details, higher rate of tax shall be deducted as per the Act. - Concessional certificates, if any, should be provided well in time for lower deduction of tax.		**Non Deviatable**
	Terms & Conditions to be complied 1. All invoices (incl. Credit Notes, Debit Notes) to contain BHEL HPEP GSTIN ie 36AAACB4146P1ZG. Invoices submitted should be in the format as specified under GST Law. All details as mentioned in Invoice Rules including Dealer GST registration number (GSTIN), invoice number with date of issue, quantity, rate, value, taxes with nomenclature – CGST, SGST, UGST, IGST mentioned separately, HSN Code / SAC Code etc. 2. Reimbursement of GST amount will be made only upon completion of the following: i. Bidder declaring such invoice in their GSTR-1 Return/ IFF ii. Receipt of Goods or Services and Submission of Tax invoice by BHEL iii. The tax invoice is reflected in the GSTR2B of BHEL, HPEP (buyer). Payment of GST will be made only if it is matching with data uploaded by the Bidder in GST portal. 3. In case of discrepancy in the data uploaded by the bidder in the GSTN portal vis-a-vis the tax invoice or in case of any shortages or rejection in the supply, then BHEL will not be able to avail the tax credit. The same would be available in PRADAN Portal for the bidder's information. Bidder has to rectify the data discrepancy in the GSTN portal or issue credit note or debit note (details also to be uploaded in GSTN portal) for the shortages or rejections in the supplies or additional claims for processing of such invoices. 4. In cases where invoice details have been uploaded by the bidder but failed to remit the GST amount to GST Department within stipulated time, then GST on the invoices in default will be recovered from the bidder along with the applicable interest. 5. In case GST credit is delayed/denied to BHEL due to non/delayed receipt of goods and/or tax invoice or expiry of timeline prescribed in GST law for availing such ITC, or any other reasons not attributable to BHEL, such GST amount will be recoverable from bidder along with interest levied/ leviable on BHEL. 6. GST TDS deducted as per GST Act, is uploaded in GSTN portal along GSTR7. Bidders can directly download the GST TDS Certificate from the GSTN Portal. 7. Bidders to note that Rules & Regulations pertaining to E-way bill system are to be strictly adhered to, as and when notified by Govt. authorities. 8. Vendors who fall under the E-Invoice regulations, i.e., having an annual turnover of Rs. 10 crores **(Rs 5 crore w.e.f 01.08.2023)** in the previous year shall issue e-invoice in line with Rule 48(4) of CGST Rules failing which GST amount will not be reimbursed to the vendor even if the other requirements are fulfilled. 9. In case the vendor is exempted by the GST department under the Rule 48(4) of CGST Rules from issuing E-invoice, a declaration as prescribed in the Notification 17/2022 - Central Tax dated 01-08-2022 shall be provided on the invoice. 10. Vendors who do not fall under the E-Invoice regulations, i.e., whose annual turnover is less than Rs. 10 crores **(Rs 5 crore w.e.f 01.08.2023)** in the previous year have to give an undertaking indemnifying BHEL that the vendor is not falling under the E-invoice requirement category and that in case of any breach of this E-invoicing requirement, the vendor indemnifies BHEL of any consequences that may arise due to such a breach. 11. No GST shall be levied on liquidated damages / penalty.		

B.	**Foreign Purchase (Imports)**		
	The offered price shall be inclusive of all the Taxes and duties as applicable in country of export / country of dispatch for the quoted price. Taxes deducted at source: a. In case of goods or services subject to Income tax in India, such tax as per the extant statute shall be recovered. b. In case bidder does not provide necessary documents for beneficial taxation (Refer clause 7-B-(ix) a-c of ITB), the TDS deduction shall be at the maximum percentage stipulated as per the provisions of Income Tax Act.		**Non Deviatable**
12	**Payment Terms: Unless otherwise specified in SCC, following shall be the terms of Payment.**		
A	Indigenous: a. Micro & Small Enterprises (MSEs) - 100% EFT payment within 45 days b. Medium Enterprises - 100% EFT payment within 60 days c. Non MSME Bidders - 100% Direct EFT Payment within 90 Days Note A. Above due date is reckoned from the date of Receipt of material or 15 days from the date of submission of complete set of documents as per PO whichever is later. Objections, if any on the invoice, available on SUVIDHA portal need to be closed. In such instances, due date is reckoned from the closure of objections. Vendors are advised to get familiarized with the document exchange feature on SUVIDHA portal. Payment will be made for Material accepted value. B. MSEs (covered under MSME Act) need to register and renew periodically and update the same with BHEL C. The taxes that are reimbursed are limited to applicable taxes as on the Purchase Order delivery date or the amount actually paid whichever is less. D. Adherence to the above time schedule of payment is contingent upon Bidder complying with GST provisions and availment of Input Tax Credit by BHEL before the date of payment. E. In case of packaged items, 10% of supply value will be retained till completion of total supplies. F. Bidders to comply with clause 11 on GST requirements G. MSE benefits are not applicable to Traders / Wholesalers registered as MSEs. H. . In respect of procurement of goods or services from Micro, Small and Medium enterprises (MSMEs), the settlement of invoice shall be only through any of the TReDS platform ((i.e RXIL, MI xchange, Invoicemart, KReDX), authorised by the Reserve Bank of India. Supplier will have the option to change the TReDS platform from the drop down menu on Suvidha portal of BHEL, at the time of invoice submission. Wherever the Trade Receivable is accepted by BHEL, the same shall be validated by the Unit on the respective TReDS platform selected by the supplier. The routing of invoices through the TReDS platform shall not be construed as mandating discounting of such invoices and the MSMEs supplier shall have the option to avail or not avail financing or discounting of its receivables on the TReDS platform. In case discounting is not availed by the supplier on TReDS, the trade receivables will be paid through TReDS as per the payment timelines indicated in the contract."		
B	**Imports:** i) 100% payment (less Indian Agency Commission, if any) shall be through Wire Transfer with a credit period of *45* days - Cash Against Documents (CAD) ii) In case Bidder opts for Letter of Credit payment, the LC Usance period shall be 90 days with respective bank charges to respective accounts and loading of 0.50% iii) Indian Agency commission if payable and so specified in the Purchase order shall be paid in Indian Rupees, considering the SBI TT selling exchange rate, as on the date of payment after successful completion of the contract.		
C	**Conditions for LC:** a. LC validity period will be 90 days and for any extension, applicable charges will be to bidder's account. b. LC will be opened after successful completion of pre dispatch inspection prior to the scheduled / agreed delivery date. LC will be opened within 15 bank working days from the date of request.		**Non Deviatable**
D	**Conditions for both Indigenous & Foreign Bidders:** a. In case Bidders insist for lesser Credit period and BHEL accepts, a loading of 0.60% for every 15 days reduction will be applicable. b. In case PBG as required is not furnished, Payment will be released deducting the BG amount, which will be paid after expiry of warranty period against submission of supplementary claim. c. Payment does not imply in any respect whatsoever a waiver of Buyer's right to performance of the Order. Buyer is entitled to set off claimable debts against claimable liabilities with the bidder by means of a setoff Note.		**Non Deviatable**

13	**Penalty clause:**		
	In the event of delay in supply /part-supply of goods, Penalty as detailed below is leviable a. Penalty of 0.5% per week or part there of shall be levied, limited to a max of 10% (ten percent) of delayed portion value / order value (as specified in SCC). b. Penalty applicable for delay in documentation is as per SCC. c. Date Reckoned for Penalty - Indigenous Orders with delivery terms FOR HPEP: C Note date. - Indigenous Orders (Others): Date of e-waybill. - Imports: For CIP/CIF Orders: IGM date - Imports: For FOB Orders: AWB / BL date - Imports: For FCA Orders: Date of acknowledgement from Freight Forwarder. For Ex Work Orders (both air and sea): Latest of Air Freight Request (AFR), Invoice, Packing List, Inspection date (if applicable) or any other documentary evidence confirming material readiness. d. In case of Deviation to above Penalty clause, loading applicable to the extent to which not agreed by Bidder. e. Timelines as mentioned in the Annexure 1 will be considered for reckoning delivery.		
14	**Excess materials** supplied beyond tolerance limit as specified in PO will not be paid and bidder may raise credit note for the excess/unaccepted material as per GST law.		**Non Deviatab**
15	**Rejected materials**, if any, shall be collected by the bidder within 90 days of such communication to the bidder. Beyond this period the bidder forfeits their right to the materials.		**Non Deviatab le**
16	**Guarantee / Warranty Period:** Wherever required, and so provided in the specifications/SCC/Purchase Order, the bidder shall guarantee that the goods supplied shall comply with the specifications laid down, for materials, workmanship and performance. a. Guarantee period shall be 12 months from the date of commissioning or 18 months from the date of supply whichever is earlier. b. In case erection & commissioning is involved, guarantee period shall be 12 months from the date of commissioning. c. In case of equipment bought as a package which are intended to be incorporated in installations or systems, the guarantee period shall be 12 months from the date of commissioning of such equipment. The guarantee period shall be extended by the period during which the goods are not in compliance. If the delivery is found to be non-complaint, bidder shall replace, repair or re-execute the as requested by BHEL. If the bidder defaults on his obligations, buyer has the right to proceed to replace, repair or re-execute at the bidder's expense. A guarantee period as described above shall apply afresh to replaced, repaired or re-executed parts of a delivery. **Loading for deviation:** In case warranty specified in SCC is over and above the period mentioned in b & c above; loading will be 1% per annum for the deviation in warranty end period, on the contract value. Expected commissioning period is as indicated in SCC.		**Non Deviatab le**
17	**PERFORMANCE BANK GUARANTEE (PBG) (Applicable in case mentioned in SCC)** In case enquiry specifically spells out PBG requirement, PBG is to be submitted by Bidder in requisite format as per Annexure VII. Further detailing on PBG as specified in SCC. The PBG shall be for the performance of the goods and shall remain binding not withstanding such variations, alterations or extensions of item as may be made, give, conceded or agreed to between the Bidder and BHEL under these Terms and conditions or otherwise.		**Non Deviatab le**

NOTE: Deviations (Commercial as well as Technical) from the tender specifications and conditions are generally not acceptable. However, deviation if any, shall be brought out clearly with proper justification in the offer. The deviation, if considered by BHEL, shall be loaded for comparison, while evaluating the offer. If a bidder unconditionally withdraws any deviation before price bid opening, the same shall not be loaded. Loading criteria in respect of major commercial conditions where deviations if any are accepted shall be as per clause No.18.
The Bidders may specifically note the following.

18 Evaluation and Loading Criteria:

i) Evaluation Currency for this tender shall be “INR”.
ii) Evaluation of prices shall be done item-wise unless otherwise specified in the SCC.
iii) Evaluation shall be on the basis of delivered cost, i.e. “Total Cost to BHEL” w.r.t the finalized technical scope and commercial conditions (after considering incidence of applicable taxes and duties and loading).
iv) In the course of evaluation, if more than one Bidder happens to occupy L1 status, effective L1 will be decided by soliciting discounts from the respective L1 Bidders. In case more than one Bidder happens to occupy the L1 status even after soliciting discounts, the L1 Bidder shall be decided by a toss/draw of lots, in the presence of the respective L1 Bidders or their representatives. Ranking will be done accordingly. BHEL decision in such situations shall be final and binding.

INDIGENOUS
a. Bidder shall ensure to indicate the applicable taxes against each line item, failing which the same will be considered as inclusive/NIL.
b. Ex-works offers received (as against FOR Destination mentioned in enquiry) shall be loaded by 2% of Ex-works value.
c. GST and any other charges quoted will be added to the base price. However, in case input credit is available for GST (SGST, CGST/IGST), the same shall be excluded for arriving at “Total Cost to BHEL"

IMPORTS
For evaluation of offers in foreign currency, exchange rate (TT selling rate of State Bank of India) as on the date of bid opening (Part-I, in case of two-part bids) shall be considered. If the relevant day happens to be a bank holiday, then the forex rate as on the previous bank (SBI) working day shall be taken.
In case of foreign Bidders, the quoted price shall be loaded by the following factors to arrive at “Total Cost to BHEL":
- Import duty as applicable on the date of Part-I bid opening.

- Loading will be as per the table below

	Ex Works	FOB/FCA	CIF/CFR	CIP
Foreign Inland freight and insurance	2%			
Marine freight and marine insurance	3%	3%		
Destination Port handling charges	0.50%	0.50%	0.50%	
clearing charges & inland freight and insurance	2%	2%	2%	2%

COMMON LOADING FOR IMPORTS & INDIGENOUS that will be added for arriving the "Total Cost to BHEL"
A. Loading on Deviated Penalty clause shall be 10% or to the extent to which the bidder has opted for deviation.
B. Loading for payment terms as per clause 12 of ITB
C. Loading for deviation in Warranty & PBG as per clause 16,17.

19 Procurement directly from the manufacturers/ suppliers shall be preferred. However, no agent shall be allowed to represent more than one manufacturer/ supplier in the same tender. Moreover, either the agent could bid on behalf of the manufacturer/ supplier or the manufacturer / supplier could bid directly but not both. In case bids are received from both from the manufacturer/ supplier and the agent, bid received from the agent shall be ignored.

20 **RIGHT OF REJECTION /NON- PLACEMENT OF PO:** BHEL reserves the right to accept or reject any or all bid/s in full or part without assigning any reason whatsoever.

21 INTEGRITY PACT
Bidders shall have to enter into Integrity Pact with BHEL as per Annexure VI - for Tender value of rupees two crores and above and shall be signed by the authorized signatory along with the offer, failing which Bidder’s offer will be rejected.

22 Public Procurement

A Make in India
For this Procurement, the local content to categorize a bidder as a Class I local bidder / Class II local bidder / Non-Local bidder and purchase preference to Class I local bidder, is as defined in Public Procurement (Preference to Make in India) order No P-45021/2/2017-PP(BE-II) dated 04-06-2020 issued by DPIIT as amended from time to time.
Proforma for self-certification for minimum local content and auditor’s certification is given in Annexure III.

B	Any Bidder from a country which shares a land border with India will be eligible to bid in this tender only if the bidder is registered with competent authority. GOI website https://www.mea.gov.in/ to be referred for latest details of competent authority and exemptions . Proforma for self-certification for compliance is given in Annexure IV.
C	**Startups:** For Start-ups duly registered with DPIIT (Copy of certificate to be provided), condition of prior turnover and prior experience in Public Procurement may be relaxed subject to meeting of Quality and Technical Specifications. Startups are exempt from paying EMD.
23	**Benefits earmarked for Purchase from Micro & Small Enterprises (MSEs) – Indigenous Purchase**
A	All Micro and Small Enterprises (MSEs) as defined in MSE Procurement Policy are exempt from Paying EMD. NSIC/UDYAM registered bidders shall submit NSIC/UDYAM Certificate along with bid documents. **Any Bidder falling under MSE category shall furnish the following details & submit documentary evidence/ Govt. Certificate etc. in support of the same along with their techno-commercial offer.** **Type under MSE** | **SC/ST Owned** | **Women Owned** | **Others (excluding SC/ST & Women Owned)** **Micro** | | | **Small** | | | **Note: If the bidder does not furnish the above in the tender, offer shall be processed construing that the bidder is not falling under MSE category.** Date to be reckoned for determining the deemed validity will be the last date of Technical bid submission. Non- submission of such document will lead to consideration of their bid, at par with other bidders and MSE status of such bidders shall be shifted to Non- MSE Category till the bidder submits these documents.
B	MSE suppliers can avail the intended benefits in respect of the procurements related to the Goods and Services only (Definition of Goods and Services as enumerated by Govt. of India vide Office Memorandum F. No. 21(8)/2011-MA dtd. 09/11/2016 office of AS & DC, MSME) and subsequent amendments & clarifications, if any. Documents NSIC/UDYAM Certificate submitted by the bidder shall be verified by BHEL for rendering the applicable benefits.
C	If an enterprise falling under MSME category as defined in the Act, graduates to a higher category from its original category or beyond the purview of the Act, it shall continue to avail all non-tax benefits of its original category notified by the Ministry of Micro, Small and Medium Enterprise for a period of three years from the date of such graduation to the higher category.
D	BHEL HPEP is registered with TReDS (RXIL , M1XCHANGE , InvoiceMart) platform. MSME bidders are requested to get registered with TReDS(RXIL / M1XCHANGE / InvoiceMart/ exchanges added from time to time) platform to avail the facility as per the GOI guidelines.
24	Inspection Measuring and Test Equipment (IMTE) used by the Bidder/ Contractor or sub-contractor shall be calibrated, maintained and controlled. Calibration shall be valid and IMTE maintained in sound condition during usage.
25	ISO-9001, ISO14001 & OHSMS 45001 shall be complied.
26	If BHEL registered supplier is not quoting against this NIT, supplier shall send regret letter positively with valid reasons for not participating. Repeated lack of response on the part of supplier may lead to deletion of such registered supplier from BHEL's approved supplier's list as per BHEL SEARP Guidelines.
27	**BREACH OF CONTRACT, REMEDIES AND TERMINATION** **27.1 BREACH OF CONTRACT:** The following shall amount to breach of contract: i. Non-supply of material/ non-completion of work by the Supplier/Vendor within scheduled delivery/ completion period as per contract or as extended from time to time. ii. The Supplier/Vendor fails to perform as per the activity schedule and there are sufficient reasons even before expiry of the delivery/ completion period to justify that supplies shall be inordinately delayed beyond contractual delivery/ completion period. iii. The Supplier/Vendor delivers equipment/ material not of the contracted quality. iv. The Supplier/Vendor fails to replace the defective equipment/ material/ component as per guarantee clause. v. Withdrawal from or abandonment of the work by the Supplier/Vendor before completion as per contract. vi. Assignment, transfer, subletting of Contract by the Supplier/Vendor without BHEL's written permission resulting in termination of Contract or part thereof by BHEL. vii. Non-compliance to any contractual condition or any other default attributable to Supplier/Vendor. viii. Any other reason(s) attributable to Vendor towards failure of performance of contract. In case of breach of contract, BHEL shall have the right to terminate the Purchase Order/ Contract either in whole or in part thereof without any compensation to the Supplier/Vendor. ix. Any of the declarations furnished by the contractor at the time of bidding and/ or entering into the contract for supply are found untruthful and such declarations were of a nature that could have resulted in non-award of contract to the contractor or could expose BHEL and/ or Owner to adverse consequences, financial or otherwise. x. Supplier/Vendor is convicted of any offence involving corrupt business practices, antinational activities or any such offence that compromises the business ethics of BHEL, in violation of the Integrity Pact entered into with BHEL has the potential to harm the overall business of BHEL/ Owner. Note- Once BHEL considers that a breach of contract has occurred on the part of Supplier/Vendor, BHEL shall notify the Supplier/Vendor by way of notice in this regard. Contractor shall be given an opportunity to rectify the reasons causing the breach of contract within a period of 14 days. In case the contractor fails to remedy the breach, as mentioned in the notice, to the satisfaction of BHEL, BHEL shall have the right to take recourse to any of the remedial actions available to it under the relevant provisions of contract

	27.2 **Remedies in case of Breach of Contract**.: i. Wherein the period as stipulated in the notice issued under clause 27.1 has expired and Supplier/Vendor has failed to remedy the breach, BHEL will have the right to terminate the contract on the ground of "Breach of Contract" without any further notice to contractor. ii. Upon termination of contract, BHEL shall be entitled to recover an amount equivalent to 10% of the Contract Value for the damages on account of breach of contract committed by the Supplier/Vendor. This amount shall be recovered by way of encashing the security instruments like performance bank guarantee etc available with BHEL against the said contract. In case the value of the security instruments available is less than 10% of the contract value, the balance amount shall be recovered from other financial remedies (i.e. available bills of the Supplier/Vendor, retention amount, from the money due to the Supplier/Vendor etc. with BHEL) or the other legal remedies shall be pursued. iii. Wherever the value of security instruments like performance bank guarantee available with BHEL against the said contract is 10% of the contract value or more, such security instruments to the extent of 10% contract value will be encashed. In case no security instruments are available or the value of the security instruments available is less than 10% of the contract value, the 10% of the contract value or the balance amount, as the case may be, will be recovered in all or any of the following manners: iv. In case the amount recovered under sub clause (a) above is not sufficient to fulfil the amount recoverable then; a demand notice to deposit the balance amount within 30 days shall be issued to Supplier/Vendor. v. If Supplier/Vendor fails to deposit the balance amount within the period as prescribed in demand notice, following action shall be taken for recovery of the balance amount: a). from dues available in the form of Bills payable to defaulted Supplier/Vendor against the same contract. b). If it is not possible to recover the dues available from the same contract or dues are insufficient to meet the recoverable amount, balance amount shall be recovered from any money(s) payable to Supplier/Vendor under any contract with other Units of BHEL including recovery from security deposits or any other deposit available in the form of security instruments of any kind against Security deposit or EMD. vi. In-case recoveries are not possible with any of the above available options, Legal action shall be initiated for recovery against defaulted supplier/Vendor. vii. It is an agreed term of contract that this amount shall be a genuine pre-estimate of damages that BHEL would incur in completion of balance contractual obligation of the contract through any other agency and BHEL will not be required to furnish any other evidence to the Supplier/Vendor for the purpose of estimation of damages. viii. In addition to the above, imposition of liquidated damages, debarment, termination, de-scoping, short-closure, etc., shall be applied as per provisions of the contract. ix. Non-performance of contract attracts penal provisions in line with BHEL guidelines for Suspension of Business Dealings (SBD). Note: 1) The defaulting Supplier/Vendor shall not be eligible for participation in any of the future enquiries floated by BHEL to complete the balance work. The defaulting contractor shall mean and include: (a) In case defaulted Supplier/Vendor is the Sole Proprietorship Firm, any Sole Proprietorship Firm owned by same Sole Proprietor. (b) In case defaulted Supplier/Vendor is The Partnership Firm, any firm comprising of same partners/ some of the same partners; or sole proprietorship firm owned by any partner(s) as a sole proprietor.
28	Any other terms and conditions of the bidder attached / referred against the tender enquiry will not be considered.
29	All drawings, patterns and tools supplied by BHEL or made at BHEL's expense are BHEL's property. These cannot be used or referred to any other party and must be used only in the execution of BHEL's orders.
30	Any amount payable by the bidder under any of the conditions of this contract shall be liable to be adjusted against any amount payable to the bidder under any other work / contract awarded by BHEL HPEP or any other BHEL Units. This is without prejudice to any other action as may be deemed fit by BHEL.
31	The bids of the bidders who are on the banned list and also the bids of the bidders, who engage the services of the banned firms, will be rejected. The list of firms banned by BHEL is available on BHEL web site: www.bhel.com
32	**Ordering and confirmation of order**
	The bidder shall send the order acceptance within one week from the date of LOI/Purchase order or such other period as specified/agreed by the Buyer. Buyer reserves the right to revoke the order placed if the order confirmation differs from the original order placed. Buyer shall be legally bound, only if agreed for any deviation explicitly in writing. The acceptance of deliverables or supplies by Buyer as well as payments made in this regard shall not imply acceptance of any deviations. The Purchase order will be deemed to have been accepted if no communication to the contrary is received within one week (or the time limit as specified /agreed by the Buyer) from the date of P.O. Buyer, is at liberty to send signed P.O. through electronic media such as e-mail and the receipt of which shall be treated as receipt of order.
33	**Execution**
	The whole contract is to be executed in the most workman like manner, substantial and approved as per the contracted terms.
34	**Progress Report**
	The bidder shall render such report as to the progress of work and in such form as may be called for by the Buyer from time to time. The submission and acceptance of such reports shall not prejudice the rights of the buyer in any manner. Bidder shall communicate to BHEL immediately, the change of address, ownership, contact person(s), the mobile numbers and e-mail of the dealing person concerned. Milestones shall be periodically updated by bidder through PRADAN Portal **(https://hpep.bhel.com/mm/).** Non updation will adversely affect service rating of bidder performance.

35	**Non-disclosure Obligations**
	Drawings, technical documents or other technical information received by one party shall not without the consent of the other party, be used for any other purpose than that for which they were provided. They may not, without the consent of the submitting party, otherwise be used or copied, reproduced, transmitted or communicated to third parties. All information and data contained in general product documentation, whether in electronic or any other form, are confidential and binding only to the extent that they are by reference expressly included in the contract. The bidder shall, as per agreed date/s but not later than the date of delivery, provide free of charge any information and/or drawings which are necessary to permit the Buyer to erect, commission, operate and maintain the product. Such information and drawings shall be supplied as specified in technical specification. All intellectual properties, including designs, drawings and product information etc. exchanged during the formation and execution of the contract shall continue to be the property of the submitting party. The bidder shall provide Buyer with all information pertaining to the delivery in so far as it could be of importance to Buyer. The bidder shall not reveal confidential information to its own employees not involved with the tender/contract and its execution and delivery or to third parties, unless Buyer has agreed to this in writing beforehand. The bidder shall not be entitled to use the Buyer's name in advertisements and other commercial publications including website without prior written permission from Buyer. In the event of violation of the confidentiality as agreed, BHEL will take legal action as deemed fit. Non-disclosure agreement to be entered as per **Annexure- II** wherever applicable.
36	**Inspection and Testing**
A	The goods and stores shall be manufactured by approved quality system and each part/component may be inspected and ested by the Buyer prior to shipment and shall comply with relevant requirements. Buyer has the right to inspect at any stage during manufacture/ delivery.
B	Buyer or his authorized representative shall be entitled at all reasonable times during execution to inspect, examine and test at the bidder's premises the material and workmanship of all stores to be supplied under the contract, and if the part of the stores are being manufactured at other premises, the bidder shall obtain for buyer or his authorized representative permission o inspect, examine and test as if the said stores are being manufactured at the bidder's premises. Such inspection, examination and testing, if made shall not release the bidder from any obligation under the contract. For indigenous bidders all costs related to first inspection request shall be borne by the buyer and the cost of subsequent nspections due to non-readiness of material/rework/ rejections shall be borne by the bidder. In case of imports all inspection charges including third party inspections if any shall be borne by the bidder. The cost of inspection staff/third party specified by he Buyer shall be borne by bidder unless otherwise specifically agreed. If the contract provides for tests on the premises of he bidder or any of his sub-contractor/s, bidder shall be responsible to provide such assistance, labor, materials, electricity, uels, stores, apparatus, instruments as may be required and as may be reasonably demanded to carry out such tests efficiently. Cost of any type test or such other special tests shall be borne by the bidder unless otherwise specifically agreed in the contract. The Bidder shall give the authorized representative of the buyer reasonable notice in writing of the date on and the place at which any stores will be ready for inspection/ testing as provided in the Contract. Annexure – I, may strictly be complied with or the time lines. Any delay in submission of the documents by the bidder will not alter the delivery date.
37	**Quality and Condition of the Deliverables**
	The bidder shall be responsible for compliance with applicable technical, safety, quality, environmental requirements and other regulations in relation to products, packaging and raw and ancillary materials.
38	**Packaging and Dispatch**
	The bidder shall package the deliverables safely and carefully and pack them suitably in all respects considering the peculiarity of the material for normal safe transport by sea/air/rail/road to its destination suitably protected against loss, damage, corrosion in transit and the effect or tropical salt laden atmosphere. The packages shall be provided with fixtures/hooks and sling marks as may be required for easy and safe handling by mechanical means. Special packaging conditions/ environmental conditions as defined in the NIT shall be fully complied. Each package must be marked with consignee name, address, P.O. number, Package Number, gross weight & net weight, dimensions (Lx B x H) and bidder's name. The packing shall allow for easy removal and checking of goods on receipt and comply with carrier's conditions of packing or established trade practices. Packing list for goods inside each package with P.O. item No. & quantity must also be fixed securely outside the box to indicate the contents. If any consignment needs special handling instruction, the same shall be clearly marked with standard symbols/instructions. Hazardous material should be notified as such and their packing, transportation and other protection must conform to relevant regulations.
39	**Contract variations; Increase or decrease in the scope of supply**
	Buyer may vary the contracted scope during execution due to exigencies of project requirement. If the bidder is of the opinion that the variation has an effect on the agreed price or delivery period, Buyer shall be informed of this immediately in writing along with technical details, and in the event of additional work, submit a quotation with regards to the price and period involved, as well as the effect this additional work will have on the other work to be performed by the bidder. Wherever unit rates are available in the contract, the same shall be applied to such additional work. The bidder shall not perform additional work before buyer has issued written instructions/amendment to the purchase order to that effect. The work which the bidder should have or could have anticipated in terms of delivering the service (s) and functionality (ies) as described in this agreement should be executed by the bidder without any price implication. In case of no change in the scope / technical specifications, bidder shall endeavor to keep the material ready and intimate the same to BHEL within the contractual delivery date, failing which, the delay if any will be attributed to supplier, and any upward price variation thereof for delivery at a later date is not admissible.
40	**Rejected/Short shipments/ warranty/guarantee replacements**
	In case of any short shipment during initial supply which is subsequently dispatched by the bidder or any guarantee / warranty replacements shall be dispatched on "DDP-Delivered duty paid BHEL stores" basis for imported items and "FOR-BHEL Stores/designated destination" basis for indigenous items.

41	**Export Administration Regulations**
	If a delivery includes such technology and / or supply that is subjected to the export regulations the bidder shall obtain due permissions, approvals, license etc.
42	**Force Majeure**
	The bidder shall not be considered in default if delay occurs due to causes beyond their control such as Acts of God, Natural calamities, Fire, Frost, Flood, Civil War, civil commotion, riot, Government Restrictions. Only those causes that have duration of more than seven days shall be considered cause of force majeure. Notification to this effect duly certified by local chamber of commerce/statutory authorities with supporting documents shall be given by the bidder to BHEL by registered letter/courier service immediately without loss of time. In the event of delay due to such causes the delivery schedule shall be extended for a length of time equal to the period of Force Majeure or at the option of BHEL the order may be cancelled. Such cancellation would be without any liability whatsoever on the part of BHEL. In the event of such cancellation the bidder shall refund any amount advanced or paid to the bidder by BHEL and deliver back any material issued to him by BHEL and release facilities, if any provided by BHEL.
43	**Non-waiver of Defaults**
	If any individual provision of the contract is invalid, the other provisions shall not be affected.
44	**Settlement of Disputes**
	Except as otherwise specifically provided in the contract, all disputes concerning questions of the facts arising under the contract, shall be decided by the Buyer, subject to written appeal by the bidder to the buyer, whose decision shall be final. Any disputes of differences shall to the extent possible be settled amicably between the parties thereto, failing which the disputed issues shall be settled through arbitration The bidder shall continue to perform the contract, pending settlement of disputes(s).
45	**Conciliation clause**
	CONCILIATION CLAUSE FOR CONDUCTING CONCILIATION PROCEEDINGS UNDER THE BHEL CONCILIATION SCHEME, 2018: The Parties agree that if at any time (whether before, during or after the arbitral or judicial proceedings), any Disputes (which term shall mean and include any dispute, difference, question or disagreement arising in connection with construction, meaning, operation, effect, interpretation or breach of the agreement, contract or the Memorandum of Understanding, penalty deduction, time extension), which the Parties are unable to settle mutually, arise inter-se the Parties, the same may, be referred by either party to Conciliation to be conducted through Independent Experts Committee to be appointed by competent authority of BHEL from the BHEL Panel of Conciliators. The proceedings of Conciliation shall broadly be governed by Part-III of the Arbitration and Conciliation Act 1996 or any statutory modification thereof and as provided in Procedure in http://www.bhel.com/index.php/story_details?story=2454 . The Procedure together with its Formats will be treated as if the same is part and parcel hereof and shall be as effectual as if set out herein in this ITB
46	**ARBITRATION**
	46.1 Except as provided elsewhere in this Contract, in case Parties are unable to reach amicable settlement (whether by Conciliation to be conducted as provided in Clause 45 herein above or otherwise) in respect of any dispute or difference; arising out of the formation, breach, termination, validity or execution of the Contract; or, the respective rights and liabilities of the Parties; or, in relation to interpretation of any provision of the Contract; or. in any manner touching upon the Contract (hereinafter referred to as the 'Dispute'), then, either Party may, refer the disputes to IAMC (International Arbitration and Mediation Centre, Hyderabad) and such dispute to be adjudicated by Sole Arbitrator appointed in accordance with the IAMC Rules. 46.2 A party willing to commence arbitration proceeding shall invoke Arbitration Clause by giving notice to the other party in terms of section 21 of the Arbitration & Conciliation Act, 1996 (hereinafter referred to as the 'Notice') before referring the matter to IAMC. The Notice shall be addressed to the Head of the Unit, BHEL, executing the Contract and shall contain the particulars of all claims to be referred to arbitration with sufficient detail and shall also indicate the monetary amount of such claim including interest, if any. 46.3 After expiry of 30 days from the date of receipt of aforesaid notice, the party invoking the Arbitration shall submit that dispute to IAMC and that dispute shall be adjudicated in accordance with their respective Arbitration Rules. The matter shall be adjudicated by a Sole Arbitrator who shall necessarily be a Retd Judge having considerable experience in commercial matters to be appointed/nominated by the respective institution. The cost/expenses pertaining to the said Arbitration shall also be governed in accordance with the Rules of the respective Arbitral Institution. The decision of the party invoking the Arbitration for reference of dispute to a specific Arbitral institution for adjudication of that dispute shall be final and binding on both the parties and shall not be subject to any change thereafter. The institution once selected at the time of invocation of dispute shall remain unchanged. 46.4 The fee and expenses shall be borne by the parties as per the Arbitral Institutional rules. 46.5 The Arbitration proceedings shall be in English language and the seat and venue of Arbitration shall be Hyderabad. 46.6 Subject to the above, the provisions of Arbitration & Conciliation Act 1996 and any amendment thereof shall be applicable. All matters relating to this Contract and arising out of invocation of Arbitration clause are subject to the exclusive jurisdiction of the Court(s) situated at Hyderabad. 46.7 Notwithstanding any reference to the Designated Engineer or Conciliation or Arbitration herein, a. the parties shall continue to perform their respective obligations under the Contract unless they otherwise agree. Settlement of Dispute clause cannot be invoked by the Contractor, if the Contract has been mutually closed or 'No Demand Certificate' has been furnished by the Contractor or any Settlement Agreement has been signed between the Employer and the Contractor. 46.8 It is agreed that Mechanism of resolution of disputes through arbitration shall be available only in the cases where the

	value of the dispute is less than Rs. 10 Crores. 46.9 In case the disputed amount Claim, Counter claim including interest is Rs. 10 crores and above, the parties shall be within their rights to take recourse to remedies other than Arbitration, as may be available to them under the applicable laws after prior intimation to the other party. Subject to the aforesaid conditions, provisions of the Arbitration and Conciliation Act, 1996 and any statutory modifications or re-enactment thereof as amended from time to time, shall apply to the arbitration proceedings under this clause. 46.10 In case, multiple arbitrations are invoked (whether sub-judice or arbitral award passed) by any party to under this contract, then the cumulative value of claims (including interest claimed or awarded) in all such arbitrations shall be taken in account while arriving at the total claim in dispute for the subject contract for the purpose of clause 46.9. Disputes having cumulative value of less than 10 crores shall be resolved through arbitration and any additional dispute shall be adjudicated by the court of competent jurisdiction. In the event of any dispute or difference relating to the interpretation and application of the provisions of commercial contract(s) between Central Public Sector Enterprises (CPSEs)/ Port Trusts inter se and also between CPSEs and Government Departments/Organizations (excluding disputes concerning Railways, Income Tax, Customs & Excise Departments), such dispute or difference shall be taken up by either party for resolution through AMRCD (Administrative Mechanism for Resolution of CPSEs Disputes) as mentioned in DPE OM No. 05/0003/2019-FTS-10937 dated 14-12-2022 as amended from time to time.
47	**Applicable Laws and jurisdiction of Courts**
	This contract shall be governed by the Law for the time being in force in the Republic of India. Subject to clause 46 of this contract, the Civil Court having original Civil Jurisdiction at Hyderabad, shall alone have exclusive jurisdiction in regard to all matters in respect of the Contract."
48	**BHEL-Fraud prevention policy shall be adhered to.**
	The Bidder along with its associate/ Collaborators/ Sub-contractors/ sub-bidders/ consultants/ service providers shall strictly adhere to BHEL Fraud Prevention policy displayed on BHEL Website http://www.bhel.com and shall immediately bring to the notice of BHEL management about any fraud or suspected fraud as soon as it comes to their notice. List of nodal officers is hosted on BHEL Hyderabad website https://hpep.bhel.com/.
49	**Suspected Cartel Formation**
	The Bidder declares that they will not enter into any illegal or undisclosed agreement or understanding, whether formal or informal with other Bidder(s). This applies in particular to prices, specifications, certifications, subsidiary contracts, submission or non-submission of bids or any other actions to restrict competitiveness or to introduce cartelization in the bidding process. In case , the Bidder is found having indulged in above activities, suitable action shall be taken by BHEL as per extant policies / guidelines .
50	**Treatment of cases regarding conflict of interest:** The bidder notes that a conflict of interest would said to have occurred in the tender process and execution of the resultant contract, in case of any of the following situations: i) If its personnel have a close personal, financial, or business relationship with any personnel of BHEL who are directly or indirectly related to the procurement or execution process of the contract, which can affect the decision of BHEL directly or indirectly; ii) The bidder (or his allied firm) provided services for the need assessment/procurement planning of the Tender process in which it is participating; iii) Procurement of goods directly from the manufacturers/ suppliers shall be preferred. However, if the OEM/ Principal insists on engaging the services of an agent, such agent shall not be allowed to represent more than one manufacturer/ supplier in the same tender. Moreover, either the agent could bid on behalf of the manufacturer/ supplier or the manufacturer/ supplier could bid directly but not both. In case bids are received from both the manufacturer/supplier and the agent, bid received from the agent shall be ignored. However, this shall not debar more than one Authorized distributor (with/ or without the OEM) from quoting equipment manufactured by an Original Equipment Manufacturer (OEM) in procurements under a Proprietary Article Certificate. iv) A bidder participates in more than one bid in this tender process. Participation in any capacity by a Bidder (including the participation of a Bidder as a partner/ JV member or sub-contractor in another bid or vice-versa) in more than one bid shall result in the disqualification of all bids in which he is a party. However, this does not limit the participation of an entity as a subcontractor in more than one bid if he is not bidding independently in his own name or as a member of a JV. The Bidder declares that they have read and understood the above aspects, and the bidder confirms that such conflict of interest does not exist and undertakes that they will not enter into any illegal or undisclosed agreement or understanding, whether formal or informal with other Bidder{s), in this regard. This applies in particular to prices, specifications, certifications, subsidiary contracts, submission or non-submission of bids or any other actions to restrict competitiveness or to introduce cartelization in the bidding process. **In case, the Bidder is found having indulged in above activities, the same will be considered as a violation of the tender conditions, and suitable action shall be taken by BHEL as per extant policies/guidelines.**
51	**Escalation Matrix**

	Details	**Name**	**Contact Number**
	Authorised representative		
	Technical In-charge		
	Finance and Taxation		
	Escalation for above		

52	**Grievance Redressal Mechanism**
	To promote transparency and ensure fair treatment of all bidders, a structured Grievance Redressal Mechanism is in place to address any concerns or issues arising during the tendering process or in subsequent business dealings with the company. Suppliers/Contractors are requested to follow the below escalation process for grievance resolution: 1. First Level: Any grievance should initially be addressed to the designated Dealing Officer, whose contact details are provided in the Notice Inviting Tender (NIT)/Contract. 2. Second Level: If the issue remains unresolved, it may be escalated by lodging a formal grievance through the SUVIDHA Portal: https://suvidha.bhel.in/suvidha/. Responses will be provided in accordance with the defined escalation matrix.”

Note: Purchase officer has to fill Annexure-I while sending enquiry

Annexure-I			
Major Activity timelines shall be considered for indegenous purchases			
S No	Activity	Agency	Timeline
1	PO acknowledgement	Vendor	_____days from PO
2	Submission of Drawings and QP	Vendor	_____days from PO
3	Approval of Drawings and QP	BHEL/Customer	_____days from PO
4	Raising of Inspection Call	Vendor	_____days from PO
5	Inspection completion	Self/BHEL/Third party inspection agency	_____ days from inspection call date
6	Despatch Instructions	BHEL	_____days from inspection report
7	Reciept of Material	Vendor	_____days from Despatch instructions

Above is illustrative only.Purchase department can add more activities depending on nature of prodcut/contracts

However absence of this annexure in NIT will entail non processing of delivery extention cases in case of delay in supplies of goods owing to reason attributable to BHEL.

Annexure - III

Proforma for self-certification by Supplier for minimum local content on their letter head for tender value less than Rs 10 Crore

"We _____ (Name of Manufacturer) undertake that we meet the mandatory minimum Local Content (LC) requirement i.e. _____ (to be filled as notified in the policy) for claiming Purchase Preference linked with Local Contents under the Govt. policy against tender no. _____."

Auditor's certification with respect to minimum local content on the letter head of Statutory Auditor/Cost Auditor for tender value above Rs.10 crore

"We _____ the statutory auditor/Cost Auditor of M/s _____ (name of the bidder) hereby certify that M/s_____ (name of manufacturer) meet the mandatory Local Content requirements of the Goods and/or Services i.e. _____ (to be filled as notified in the policy) quoted vide offer No._____ dated _____ against BHEL's tender No._____ by M/s _____ (Name ofthe bidder).=

Annexure - IV

Proforma for self-certification by Supplier for Compliance to Clause No 20 (B)

I have read the clause regarding restrictions on procurement from a bidder of a country which shares a land border with India and I certify that M/s.... (Name of firm) is **not from such a country/is from such a country (**delete whichever is NOT applicable**)** and has been duly registered with the Competent authority (delete if NOT applicable) . I hereby certify M/s ..... fulfills all requirements in this regard and is eligible to be considered . (where applicable , valid registration by the competent authority shall be attached)

Sd/-
Authorised Signatory with Stamp

Annexure V

(On Company Letter Head)

FORM NO. 10F
[See sub-rule (1) of rule 21AB]
Information to be provided under sub-section (5) of section 90 or sub-section (5) of section 90A of the Income-tax Act, 1961

I……. son/daughter of Mr ……. in the capacity of……. (Designation) do provide the following information, relevant to the previous year **2021-22** in case of …….. for the purposes of sub-section (5) of section 90/section 90A:-

Sl.No.	Nature of information	Details
(i)	Status (individual; company, firm etc.) of the assesse	Company
(ii)	Permanent Account Number (PAN) of the assessee if allotted	
(iii)	Nationality (in the case of an individual) or Country or specified territory of incorporation or registration (in the case of others)	……
(iv)	Assessee's tax identification number in the country or specified territory of residence and if there is no such number, then, a unique number on the basis of which the person is identified by the Government of the country or the specified territory of which the assessee claims to be a resident	……

(v)	Period for which the residential status as mentioned in the certificate referred to in sub-section (4) of section 90 or sub-section (4) of section 90A is applicable	**2022-23**
(vi)	Address of the assessee in the country or territory outside India during the period for which the certificate, mentioned in (v) above, is applicable	…….. ……. ……

I have obtained a certificate to in sub-section (4) of section 90 of sub-section (4) of section 90A from the Government of……. (name of country or specified territory outside India)

Signature:…….
Name:…….
Address:…….
Email ID:……
Contact Number…….
Permanent Account Number:…….

Verification

I……. do hereby declare that to the best of my knowledge and belief what is stated above is correct complete and is truly stated. Verified today the……. day of……..…….

In case the M/s Bharat Heavy Electricals Limited, HPEP, Ramachandrapuram, Hyderabad is declared as an assessee in default due to any misstatement or incorrect declaration, we indemnify M/s Bharat Heavy Electricals Limited from any ensuing consequences thereunder.

Signature of the person providing the information

Place:…….

(On Company Letter Head)

No Business Connection or Permanent Establishment Certificate

Date

To

Bharat Heavy Electricals Limited
Ramachandrapuram, Hyderabad
India - 502032

Sir,

Sub: No Business Connection or Permanent Establishment declaration for FY **2021-22**

This is to certify that …… (Name of the supplier) is a company incorporated in ……(country) and does not have any business connection in India as per the provision of Section 9 of the Income Tax Act 1961 or any Permanent Establishment as defined in Article 5 of the India and …….(country) DTAA.

We hereby certify that we will notify BHEL in case of any change in the status as certified above.

For ……

Authorised Signatory

(Note – Please refer definition of the Business Connection on reverse and Permanent Establishment in the relevant DTAA)

"Business connection" as defined in Section 9 of the Income Tax Act the shall include any business activity carried out through a person who, acting on behalf of the non-resident,—

(a) has and habitually exercises in India, an authority to conclude contracts on behalf of the non-resident or habitually concludes contracts or habitually plays the principal role leading to conclusion of contracts by that non-resident and the contracts are—

(i) in the name of the non-resident; or

(ii) for the transfer of the ownership of, or for the granting of the right to use, property owned by that non-resident or that non-resident has the right to use; or

(iii) for the provision of services by the non-resident; or

(b) has no such authority, but habitually maintains in India a stock of goods or merchandise from which he regularly delivers goods or merchandise on behalf of the non-resident; or

(c) habitually secures orders in India, mainly or wholly for the non-resident or for that non-resident and other non-residents controlling, controlled by, or subject to the same common control, as that non-resident:

Provided that such business connection shall not include any business activity carried out through a broker, general commission agent or any other agent having an independent status, if such broker, general commission agent or any other agent having an independent status is acting in the ordinary course of his business :

Provided further that where such broker, general commission agent or any other agent works mainly or wholly on behalf of a non-resident (hereafter in this proviso referred to as the principal non-resident) or on behalf of such non-resident and other non-residents which are controlled by the principal non-resident or have a controlling interest in the principal non-resident or are subject to the same common control as the principal non-resident, he shall not be deemed to be a broker, general commission agent or an agent of an independent status

For the removal of doubts, it is hereby clarified with explanation-2A, that the significant economic presence of a non-resident in India shall constitute "business connection" in India and "significant economic presence" for this purpose, shall mean—

(a) transaction in respect of any goods, services or property carried out by a non-resident in India including provision of download of data or software in India, if the aggregate of payments arising from such transaction or transactions during the previous year exceeds such amount as may be prescribed; or

(b) systematic and continuous soliciting of business activities or engaging in interaction with such number of users as may be prescribed, in India through digital means:

Provided that the transactions or activities shall constitute significant economic presence in India, whether or not,—

(i) the agreement for such transactions or activities is entered in India; or

(ii) the non-resident has a residence or place of business in India; or

(iii) the non-resident renders services in India:

Thresholds for the purposes of significant economic presence.

11UD. (1) For the purposes of clause (a) of Explanation 2A to clause (i) of sub-section (1) of section 9, the amount of aggregate of payments arising from transaction or transactions in respect of any goods, services or property carried out by a non-resident with any person in India, including provision of download of data or software in India during the previous year, shall be two crore rupees;

(2)For the purposes of clause (b) of Explanation 2A to clause (i) of sub-section (1) of section 9, the number of users with whom systematic and continuous business activities are solicited or who are engaged in interaction shall be three lakhs.

Annexure- VI

INTEGRITY PACT

Between

Bharat Heavy Electricals Ltd. (BHEL), a company registered under the Companies Act 1956 and having its registered office at "BHEL House", Siri Fort, New Delhi - 110049 (India) hereinafter referred to as "The Principal", which expression unless repugnant to the context or meaning hereof shall include its successors or assigns of the ONE PART

and

_____, (description of the party along with address), hereinafter referred to as "The Bidder/ Contractor" which expression unless repugnant to the context or meaning hereof shall include its successors or assigns of the OTHER PART

Preamble

The Principal intends to award, under laid-down organizational procedures, contract/s for _____

_____

_____ (hereinafter referred to as "Contract"). The Principal values full compliance with all relevant laws of the land, rules and regulations, and the principles of economic use of resources, and of fairness and transparency in its relations with its Bidder(s)/ Contractor(s).

In order to achieve these goals, the Principal will appoint panel of Independent External Monitor(s) (IEMs), who will monitor the tender process and the execution of the contract for compliance with the principles mentioned above.

Section 1- Commitments of the Principal

1.1 The Principal commits itself to take all measures necessary to prevent corruption and to observe the following principles: -

1.1.1 No employee of the Principal, personally or through family members, will in connection with the tender for, or the execution of a contract, demand, take a promise for or accept, for self or third person, any material or immaterial benefit which the person is not legally entitled to.

1.1.2 The Principal will, during the tender process treat all Bidder(s) with equity and reason. The Principal will in particular, before and during the tender process, provide to all Bidder(s) the same information and will not provide to any Bidder(s) confidential/ additional information through which the Bidder(s) could obtain an advantage in relation to the tender process or the contract execution.

1.1.3 The Principal will exclude from the process all known prejudiced persons.

1.2 If the Principal obtains information on the conduct of any of its employees which is a penal offence under the Bharatiya Nyaya Sanhita (BNS) 2023 and Prevention of Corruption Act 1988 or any other statutory penal enactment, or if there be a substantive suspicion in this regard, the Principal will inform its Vigilance Office and in addition can initiate disciplinary actions.

Section 2 - Commitments of the Bidder(s)/ Contractor(s)

2.1 The Bidder(s)/ Contractor(s) commit himself to take all measures necessary to prevent corruption. The Bidder(s)/ Contractor(s) commits himself to observe the following principles during participation in the tender process and during the contract execution.

2.1.1 The Bidder(s)/ Contractor(s) will not, directly or through any other person or firm, offer, promise or give to the Principal or to any of the Principal's employees involved in the tender process or the execution of the contract or to any third person any material, immaterial or any other benefit which he/ she is not legally entitled to, in order to obtain in exchange any advantage of any kind whatsoever during the tender process or during the execution of the contract.

2.1.2 The Bidder(s)/ Contractor(s) will not enter with other Bidder(s) into any illegal or undisclosed agreement or understanding, whether formal or informal. This applies in particular to prices, specifications, certifications, subsidiary contracts, submission or non-submission of bids or any other actions to restrict competitiveness or to introduce cartelization in the bidding process.

2.1.3 The Bidder(s)/ Contractor(s) will not commit any penal offence under the relevant Bharatiya Nyaya Sanhita (BNS) and Prevention of Corruption Act; further the Bidder(s)/ Contractor(s) will not use improperly, for purposes of competition or personal gain, or pass on to others, any information or document provided by the Principal as part of the business relationship, regarding plans, technical proposals and business details, including information contained or transmitted electronically.

2.1.4 Foreign Bidder(s)/ Contractor(s) shall disclose the name and address of agents and representatives in India and Indian Bidder(s)/ Contractor(s) to disclose their foreign principals or associates. The Bidder(s)/ Contractor(s) will, when presenting his bid, disclose any and all payments he has made, and is committed to or intends to make to agents, brokers or any other intermediaries in connection with the award of the contract.

2.2 The Bidder(s)/ Contractor(s) will not instigate third persons to commit offences outlined above or be an accessory to such offences.

2.3 The Bidder(s)/ Contractor(s) shall not approach the Courts while representing the matters to IEMs and shall await their decision in the matter.

Section 3 - Disqualification from tender process and exclusion from future contracts

If the Bidder(s)/ Contractor(s), before award or during execution has committed a transgression through a violation of Section 2 above, or acts in any other manner such as to put his reliability or credibility in question, the Principal is entitled to disqualify the Bidder(s)/ Contractor(s) from the tender process , terminate the contract, if already awarded, exclude from future business dealings and/ or take action as per the separate "Guidelines on Banning of Business dealings with Suppliers/ Contractors", framed by the Principal.

Section 4 - Compensation for Damages

4.1 If the Principal has disqualified the Bidder (s) from the tender process before award / order acceptance according to Section 3, the Principal is entitled to demand and recover the damages equivalent to Earnest Money Deposit/ Bid Security.

4.2 If the Principal is entitled to terminate the Contract according to Section 3, or terminates the Contract in application of Section 3 above , the Bidder(s)/ Contractor (s) transgression through a violation of Section 2 above shall be construed breach of contract and the Principal shall be entitled to demand and recover from the Contractor an amount equal to 5% of the contract value or the amount equivalent to Security Deposit/ Performance Bank Guarantee , whichever is higher, as damages, in addition to and without prejudice to its right to demand and recover compensation for any other loss or damages specified elsewhere in the contract.

Section 5 - Previous Transgression

5.1 The Bidder declares that no previous transgressions occurred in the last 3 (three) years (to be reckoned from date of bid submission) with any other company in any country conforming to the anti-corruption approach in India that could justify his exclusion from the tender process. The date of such transgression, for the purpose of disclosure by the bidders in this regard, would be the date on which cognizance of the said transgression was taken by the competent authority. The transgression(s), for which cognizance was taken even before the said period of three years, but are pending conclusion, shall also be reported by the bidders.

5.2 If the Bidder makes incorrect statement on this subject, he can be disqualified from the tender process or the contract, if already awarded, can be terminated for such reason or action can be taken as per the separate "Guidelines on Banning of Business dealings with Suppliers/ Contractors", framed by the Principal.

Section 6 - Equal treatment of all Bidder (s)/ Contractor (s) / Sub-contractor (s)

6.1 The Principal will enter into Integrity Pacts with identical conditions as this Integrity Pact with all Bidders and Contractors.

6.2 In case of a joint venture, all the partners of the joint venture should sign the Integrity Pact. In case of Sub-contracting, the Principal Contractor shall be solely responsible for the adherence to the provisions of IP by the sub-contractor(s).

6.3 The Principal will disqualify from the tender process all Bidders who do not sign this Integrity Pact or violate its provisions.

Section 7 - Criminal Charges against violating Bidders/ Contractors /Subcontractors

If the Principal obtains knowledge of conduct of a Bidder, Contractor or Subcontractor, or of an employee or a representative or an associate of a Bidder, Contractor or Subcontractor which constitutes corruption, or if the Principal has substantive suspicion in this regard, the Principal will inform the Vigilance Office.

Section 8 -Independent External Monitor(s)

8.1 The Principal appoints competent and credible panel of Independent External Monitor (s) (IEMs) for this Integrity Pact. The task of the IEMs is to review independently and objectively, whether and to what extent the parties comply with the obligations under this Integrity Pact on receipt of any complaint by them from the bidder(s).

8.2 The IEMs are not subject to instructions by the representatives of the parties and performs his functions neutrally and independently. He reports to the CMD, BHEL.

8.3 The IEMs shall be provided access to all documents/ records pertaining to the Contract, for which a complaint or issue is raised before them as and when warranted. However, the documents/records/information having National Security implications and those documents which have been classified as /Top Secret are not to be disclosed.

8.4 The Principal will provide to the IEMs sufficient information about all meetings among the parties related to the Contract provided such meetings could have an impact on the contractual relations between the Principal and the Contractor. The parties offer to the IEMs the option to participate in such meetings.

8.5 The role of IEM is advisory and the advice of IEM is non- binding on the Organization. However, as IEMs are invariably persons with rich experience who have retired as senior functionaries of the government, their advice would help in proper implementation of the IP.

8.6 For ensuring the desired transparency and objectivity in dealing with the complaints arising out of the tendering process, the matter should be examined by the full panel of IEMs jointly, who would look into the records, conduct an examination, and submit their joint recommendations to the Management. In case the full panel is not available due to some unavoidable reasons, the available IEM(s) will conduct examination of the complaints. Consent of the IEM(s), who may not be available, shall be taken on record.

8.7 The IEMs shall examine all the representations/grievances/ complaints received by them from the bidders or their authorized representative related to any discrimination on account of lack of fair play in modes of procurement and bidding systems, tendering method, eligibility conditions, bid evaluation criteria, commercial terms & conditions, choice of technology/ specifications etc.

8.8 The CMD, BHEL shall decide the compensation to be paid to the IEMs and its terms and conditions.

8.9 IEMs should examine the process integrity, they are not expected to concern themselves with fixing of responsibility of officers. Complaints alleging mala fide on the part of any officer of the Principal should be looked into by the CVO of the Principal.

8.10 If the IEMs have reported to the CMD, BHEL, a substantiated suspicion of an offence under relevant Bharatiya Nyaya Sanhita (BNS)/ Prevention of Corruption Act, and the CMD, BHEL has not, within reasonable time, taken visible action to proceed against such offence or reported it to the Vigilance Office, the IEMs may also transmit this information directly to the Central Vigilance Commissioner, Government of India.

8.11 After award of work, the IEMs shall look into any issue relating to execution of Contract, if specifically raised before them. As an illustrative example, if a Contractor who has been awarded the Contract, during the execution of Contract, raises issue of delayed payment etc. before the IEMs, the same shall be examined by the panel of IEMs.

8.12 However, the IEMs may suggest systemic improvements to the management of the Principal, if considered necessary, to bring about transparency, equity and fairness in the system of procurement.

8.13 The word `Monitor' would include both singular and plural.

Section 9 - Pact Duration

9.1 This Integrity Pact shall be operative from the date this Integrity Pact is signed by both the parties. Any violation of the same would entail disqualification of the bidders and exclusion from future business dealings.

9.2 If any claim is made/ lodged during currency of this Integrity Pact, the same shall be binding and continue to be valid despite the lapse of this Pact as specified above, unless it is discharged/ determined by the CMD, BHEL.

Section 10 - Other Provisions

10.1 This Integrity Pact is subject to Indian Laws and exclusive jurisdiction shall be of the competent Courts as indicated in the Tender or Contract, as the case may be.

10.2 Changes and supplements as well as termination notices need to be made in writing.

10.3 If the Bidder(s)/ Contractor(s) is a partnership or a consortium or a joint venture, this Integrity Pact shall be signed by all partners of the partnership or joint venture or all consortium members.

10.4 Should one or several provisions of this Integrity Pact turn out to be invalid, the remainder of this Integrity Pact remains valid. In this case, the parties will strive to come to an agreement to their original intentions.

10.5 Only those bidders / contractors who have entered into this Integrity Pact with the Principal would be competent to participate in the bidding. In other words, entering into this Integrity Pact would be a preliminary qualification.

10.6 In the event of any dispute between the Principal and Bidder(s)/ Contractor(s) relating to the Contract, in case, both the parties are agreeable, they may try to settle dispute through Mediation before the panel of IEMs in a time bound manner. If required, the Principal may adopt any mediation rules for this purpose. However, not more than five meetings shall be held for a particular dispute resolution. The fees/expenses on dispute resolution shall be equally shared by both the parties. In case, the dispute remains unresolved even after mediation by the panel of IEMs, either party may take further action as the terms & conditions of the Contract.

---	---
For & On behalf of the Principal (Office Seal)	For & On behalf of the Bidder/ Contractor (Office Seal)
Place _____ Date _____	
Witness:_____ (Name & Address) _____ _____	Witness:_____ (Name & Address) _____ _____

Annexure-A

1. **Security Deposit/ Performance Security**

   The successful Bidder must deposit Security Deposit 5% of the contract (Purchase Order) within 14 days from the issuance of purchase order. It should remain valid for a period of 60 (sixty) days beyond the date of completion of all contractual obligations of the supplier, including warranty obligations.

   Modes of deposit:

   i. Local cheques of Scheduled Banks (subject to realization) Pay Order/ Demand Draft/ Electronic Fund Transfer in favour of BHEL
   ii. Bank Guarantee from Scheduled Banks / Public Financial Institutions as defined in the Companies Act. The Bank Guarantee format is attached with the Tender.
   iii. Fixed Deposit Receipt issued by Scheduled Banks/ Public Financial Institutions as defined in the Companies Act (FDR should be in the name of the Contractor, a/c BHEL)
   iv. Securities available from Indian Post offices such as National Savings Certificates, Kisan Vikas Patras etc. (held in the name of Contractor furnishing the security and duly endorsed/ hypothecated/ pledged, as applicable, in favour of BHEL).
   v. Insurance Surety Bonds

   (Note: BHEL will not be liable or responsible in any manner for the collection of interest or renewal of the documents or in any other matter connected therewith)

2. **Forfeiture of Security Deposit/Performance Security:**

   The performance security will be forfeited and credited to BHEL's account in the events of a breach of contract by the supplier.

Refund of Security Deposit/Performance Security:

Security Deposit /Performance Security shall be refunded to the supplier without any interest, after due performance and completion of the contractual obligations in all respects but not later than 60 (sixty) days of completion of all such obligations including the warranty under the contract.

BANK GUARANTEE FOR PERFORMANCE SECURITY

Bank Guarantee No: .....

Date:

To

NAME

& ADDRESSES OF THE BENEFICIARY

Dear Sirs,

In consideration of Bharat Heavy Electricals Limited (hereinafter referred to as the 'Employer' which expression shall unless repugnant to the context or meaning thereof, include its successors and permitted assigns) incorporated under the Companies Act, 1956 and having its registered office at _____ through its Unit at.....(name of the Unit) having awarded to (Name of the Vendor / Contractor / Supplier) with its registered office at_____ hereinafter referred to as the ' Vendor / Contractor / Supplier ', which expression shall unless repugnant to the context or meaning thereof, include its successors and permitted assigns), a contract Ref No.....dated ..... valued at Rs..... (Rupees ----------)/FC.....(in words.....) for ..... (hereinafter called the 'Contract') and the Vendor / Contractor / Supplier having agreed to provide a Contract Performance Bank Guarantee, equivalent to .....% (.... Percent) of the said value of the Contract to the Employer for the faithful performance of the Contract,

we, ... (hereinafter referred to as the Bank), having registered/Head office at ..... and inter alia a branch at ..... being the Guarantor under this Guarantee, hereby, irrevocably and unconditionally undertake to forthwith and immediately pay to the Employer any sum or sums upto a maximum amount of Rs ---------- (Rupees ----------) without any demur, immediately on first demand from the Employer and without any reservation, protest, and recourse and without the Employer needing to prove or demonstrate reasons for its such demand.

Any such demand made on the Bank shall be conclusive as regards the amount due and payable by the Bank under this guarantee. However, our liability under this guarantee shall be restricted to an amount not exceeding Rs. _____.

We undertake to pay to the Employer any money so demanded notwithstanding any dispute or disputes raised by the Vendor / Contractor / Supplier in any suit or proceeding pending before any Court or Tribunal, Arbitrator or any other authority, our liability under this present being absolute and unequivocal.

The payment so made by us under this Guarantee shall be a valid discharge of our liability for payment thereunder and the Vendor / Contractor / Supplier shall have no claim against us for making such payment.

We the .....bank further agree that the guarantee herein contained shall remain in full force and effect during the period that would be taken for the performance of the said Contract/satisfactory completion of the performa Hyderabad ee period as per the terms of the Contract and that it shall continue to be enforceable till all the dues of the Employer under or by virtue of the said Contract have been fully paid and its claims satisfied or discharged.

We .....BANK further agree with the Employer that the Employer shall have the fullest liberty without our consent and without affecting in any manner our obligations hereunder to vary any of the terms and conditions of the said Contract or to extend time of performance by the said Vendor / Contractor / Supplier from time to time or to postpone for any time or from time to time any of the powers exercisable by the Employer against the said Vendor / Contractor / Supplier and to forbear or enforce any of the terms and conditions relating to the said Contract and we shall not be relieved from our liability by reason of any such variation, or extension being granted to the said Vendor / Contractor / Supplier or for any forbearance, act or omission on the part of the Employer or any indulgence by the Employer to the said Vendor / Contractor / Supplier or by any such matter or thing whatsoever which under the law relating to sureties would but for this provision have effect of so relieving us.

The Bank also agrees that the Employer at its option shall be entitled to enforce this Guarantee against the Bank as a principal debtor, in the first instance without proceeding against the Vendor / Contractor / Supplier and notwithstanding any security or other guarantee that the Employer may have in relation to the Vendor / Contractor / Supplier 's liabilities.

This Guarantee shall remain in force upto and including..... and shall be extended from time to time for such period as may be desired by Employer.

This Guarantee shall not be determined or affected by liquidation or winding up, dissolution or change of constitution or insolvency of the Vendor / Contractor / Supplier but shall in all respects and for all purposes be binding and operative until payment of all money payable to the Employer in terms thereof.

Unless a demand or claim under this guarantee is made on us in writing on or before the .....we shall be discharged from all liabilities under this guarantee thereafter.

This Bank Guarantee shall be governed, construed and interpreted in accordance with the laws of India.

Courts at Hyderabad shall alone have exclusive jurisdiction over any matter arising out of or in connection with this Bank Guarantee

We, ... BANK lastly undertake not to revoke this guarantee during its currency except with the previous consent of the Employer in writing.

Notwithstanding anything to the contrary contained hereinabove:

a) The liability of the Bank under this Guarantee shall not exceed.....

b) This Guarantee shall be valid up to .....

c) Unless the Bank is served a written claim or demand on or before _____ all rights under this guarantee shall be forfeited and the Bank shall be relieved and discharged from all liabilities under this guarantee irrespective of whether or not the original bank guarantee is returned to the Bank.

We, _____ Bank, have power to issue this Guarantee under law and the undersigned as a duly authorized person has full powers to sign this Guarantee on behalf of the Bank.

For and on behalf of

(Name of the Bank)

Dated.....

Place of Issue.....

[1] *NAME AND ADDRESS OF EMPLOYER I.e Bharat Heavy Electricals Limited*

[2] *NAME AND ADDRESS OF THE VENDOR / CONTRACTOR / SUPPLIER.*

[3] *DETAILS ABOUT THE NOTICE OF AWARD / CONTRACT REFERENCE*

[4] *CONTRACT VALUE*

[5] *PROJECT / SUPPLY DETAILS*

[6] *BG AMOUNT IN FIGURES AND WORDS*

[7] *VALIDITY DATE*

[8] *DATE OF EXPIRY OF CLAIM PERIOD*

Notes:

1. It is advised that expiry of claim period may be kept 3-6 months after validity date. It may be ensured that the same is in line with the agreement/ contract entered with the Vendor.

2. The BG should be on Non-Judicial Stamp paper/e-stamp paper of appropriate value as per Stamp Act prevailing in the State(s) where the BG is submitted or is to be acted upon or the rate prevailing in the State where the BG was executed, whichever is higher. The Stamp Paper/e-stamp paper shall be purchased in the name of Contractor/sub-contractor /vendor/ Bank issuing the guarantee.

3. **In Case of Bank Guarantees submitted by Foreign Vendors-**

   a. From Nationalized/Public Sector / Private Sector/ Foreign Banks (BG issued by Branches in India)
   can be accepted subject to the condition that the Bank Guarantee should be enforceable in the town/city or at nearest branch where the Unit is located i.e. Demand can be presented at the Branch located in the town/city or at nearest branch where the Unit is located.

   b. From Foreign Banks (wherein Foreign Vendors intend to provide BG from local branch of the Vendor country's Bank)

   b.1 In such cases, in the Tender Enquiry/ Contract itself, it may be clearly specified that Bank Guarantee issued by **any of the Consortium Banks only** will be accepted by BHEL. As such, Foreign Vendor needs to make necessary arrangements for issuance of Counter- Guarantee by Foreign Bank in favour of the Indian Bank's (BHEL's Consortium Bank) branch in India. It is advisable that all charges for issuance of Bank Guarantee/ counter- Guarantee should be borne by the Foreign Vendor. The tender stipulation should clearly specify these requirements.

   b.2 In case, Foreign Vendors intend to provide BG from Overseas Branch of our Consortium Bank (e.g. if a BG is to be issued by SBI Frankfurt), the same is acceptable. However, the procedure at **sl.no. b.1** will required to be followed.

   b.3 The BG issued may preferably be subject to Uniform Rules for Demand Guarantees (URDG) 758 (as amended from time to time). The BG Format provided to them should clearly specify the same.

Standardization of Bank Guarantee Formats- ADVANCE

With reference to Director HR letter No. AA/DHR/LAW/2024 dated 21.08.2024 regarding the standardization of legal documents/agreements related to company's business, find enclosed the modified Proforma Of Bank Guarantee for ADVANCE. All are advised to follow the same.

Notes:

1. It is advised that expiry of claim period may be kept 3-6 months after validity date. It may be ensured that the same is in line with the agreement/ contract entered with the Vendor.

2. The BG should be on Non-Judicial Stamp paper/e-stamp paper of appropriate value as per Stamp Act prevailing in the State(s) where the BG is submitted or is to be acted upon or the rate prevailing in the State where the BG was executed, whichever is higher. The Stamp Paper/e-stamp paper shall be purchased in the name of Contractor/sub-contractor /vendor/ Bank issuing the guarantee.

3. In exceptional circumstances where advance payment is to be made to a vendor and the Unit has contractually agreed with the Contractor/ Vendor for periodic reduction in Advance Bank Guarantee, if required the following clause may be added in the BG Text-

   "The liability under this Guarantee shall stand reduced proportionally on periodic basis, in accordance with the value of effected shipment/dispatches/services completed on written confirmation by BHEL."

4. **In Case of Bank Guarantees submitted by Foreign Vendors-**

   a. From Nationalized/Public Sector / Private Sector/ Foreign Banks (BG issued by Branches in India)
   can be accepted subject to the condition that the Bank Guarantee should be enforceable in the town/city or at nearest branch where the Unit is located i.e. Demand can be presented at the Branch located in the town/city or at nearest branch where the Unit is located.

   b. From Foreign Banks (wherein Foreign Vendors intend to provide BG from local branch of the Vendor country's Bank)

   b.1 In such cases, in the Tender Enquiry/ Contract itself, it may be clearly specified that Bank Guarantee issued by **any of the Consortium Banks only** will be accepted by BHEL. As such, Foreign Vendor needs to make necessary arrangements for issuance of Counter- Guarantee by Foreign Bank in favour of the Indian Bank's (BHEL's Consortium Bank) branch in India. It is advisable that all charges for issuance of Bank Guarantee/ counter- Guarantee should be borne by the Foreign Vendor. The tender stipulation should clearly specify these requirements.

b.2 In case, Foreign Vendors intend to provide BG from Overseas Branch of our Consortium Bank (e.g. if a BG is to be issued by SBI Frankfurt), the same is acceptable. However, the procedure at **sl.no. b.1** will required to be followed.

b.3 The BG issued may preferably be subject to Uniform Rules for Demand Guarantees (URDG) 758 (as amended from time to time). The BG Format provided to them should clearly specify the same.

Vendor/ Sub Contractor to ensure that Bank Guarantees shall be confirmed by the issuing bank directly to Beneficiary Bank through SFMS (Structured Financial Messaging System) as it provides an RBI supported integrated platform for Bank Guarantee verification. SBI Bank (BHEL township branch IFSC Code SBIN0020075) has been designated as BHEL's bank for receiving the SFMS messages.

For SFMS, BHEL's Bank details are as follows;

BHEL Account No: 62048154115

Bank Name: State Bank of India

Branch Name: BHEL Township Branch, Ramachandra Puram, Hyderabad.

IFSC Code: SBIN0020075

Same Process has to be followed for any verification of BG amendment as well.

Henceforth, only SFMS compliant BGs shall be accepted.

Bharat Heavy Electricals Limited
RAMACHANDRAPURAM, HYDERABAD - 502 032. WEB : www.bhelhyderabad.com
PHONE: 040-23182269, FAX: 040-23021953, E-mail:finance@bhelhyd.co.in
FINANCE & ACCOUNTS DEPARTMENT

HY/FIN/CM/2021-22/1

DATE: 04/09/2021

BANK ACCOUNT DATA FOR RTGS/NEFT MODE OF PAYMENT

1. Party Code :
2. Option : RTGS / NEFT/ IMPS
3. **Beneficiary Details**:

A) **Name of Beneficiary : BHARAT HEAVY ELECTRICALS LIMITED**

B) Address : RAMACHANDRAPURAM, HYDERABAD- 502032.

C) PAN of the Beneficiary : AAACB4146P

D) GSTIN Beneficiary : 36AAACB4146P1ZG

E) Bank Name : STATE BANK OF INDIA

F) BRANCH NAME : BHEL TOWNSHIP, R C PURAM, HYDERABAD- 32.

G) Account no. : 62048154115

H) Account type : Current A/c

I) Bank IFSC Code : SBIN0020075

J) Bank MICR Code : 500002370

Signature of Party:
Name : V.VISHWANATHAM
Designation: Dy.Manager/Finance
Cash Management

वी. विश्वनाथम
VISHWANATHAM
उप प्रबंधक (वित्त) / वित्त एवं लेखा विभाग
Dy Manager (Finance) / Finance & Accounts
बी.एच.ई.एल.-रामचंद्रापुरम, हैदराबाद-32, BHEL- HPEP, HYD-32

TO WHOM SO EVER IT MAY CONCERN

Certified that the above particulars are found to be correct and matching with our records in respect of the above Beneficiary. This account is utilized for the purpose of collections through **RTGS/NEFT/IMPS** only and the account is not having a valid **Cheque Facility.**

State Bank of India
BHEL Township, R.C.Puram
20075

(Signature of the Bank Manager)
Seal of Bank:

COPYRIGHT AND CONFIDENTIAL
The information on this document is the property of BHARAT HEAVY ELECTRICALS LIMITED.
It must not be used directly or indirectly in any way detrimental to the interest of the company.

PACKING, PRESERVATION AND SHIPPING INSTRUCTIONS FOR VENDOR SUPPLIED ITEMS

1.0 **Description**

This specification specifies the packing, preservation and shipping requirements for Gas Turbine vendor supplied items. For Dangote and all other export projects, in addition to 3-layer packing and closed packing case, all the items shall be shipped in containers (refer clause 20.0).

2.0 **Following are the minimum requirements to be followed for packing, preservation and shipping**

1) Packing crate drawings (with details like materials used, arrangement of items, material handling instruction for site etc.) with packing list, list of deliverables, details of no. of packages, package dimensions and weight shall be submitted for BHEL approval during detail engineering for dispatch clearance. No item shall be dispatched without BHEL approved packing drawing.

2) Packing shall be accomplished in accordance with acceptable seaworthy packing and commercial practices for all shipments. Vendor shall prepare shipment of all the equipment, such that they will be protected from damage in handling and transit. All items shall reach site in good conditions.

3) It is the responsibility of the vendor to determine that the packaging done is adequate to assure that all equipment shall arrive at destination in good condition and ready for the intended use.

4) Packing together components of dissimilar metals shall be avoided. Carbon steel material and stainless steel material shall be packed in separate packing cases.

5) Packing shall provide suitable protection for storage on site for a period of 1 year under the high humid and hot conditions specified without any further protection.

6) All electrical, instrumentation items, panels and fragile items shall be de-mounted, preserved and packed separately. Bubble packing for individual items shall be ensured before placing in the packing box.

7) Commissioning spares and mandatory spares shall be packed separately and distinctly marked as “CS” and “MS” respectively on the top of each box in red color.

8) Vendor to provide detail instructions for special requirements required for preservation of the electrical and mechanical equipment to be taken care at site for proper function of the item.

9) All the components, sub-assemblies and assemblies shall be packed seal tight. All the opening of the components, sub-assemblies and assemblies shall be blanketed to prevent the ingress of dust and moisture.

10) All surfaces requiring corrosion protection shall be thoroughly cleaned using suitable solvents (Naphtha/Acetone). The components shall then be packed with layers of VCI paper, followed by bubble wrap and VCI stretch film.

11) **3 – Layer Wrapping**

Each item shall be wrapped with the following 3 layers minimum.

- Layer 1 - Polythene sheet of 100 GSM.
- Layer 2 - Two layers of stretch film sheet of 70 GSM (each).
- Layer 3 - HDPE Tarpaulin sheet of 150 GSM.

COPYRIGHT AND CONFIDENTIAL
The information on this document is the property of BHARAT HEAVY ELECTRICALS LIMITED.
It must not be used directly or indirectly in any way detrimental to the interest of the company.

12) Each loose item shall be tagged with identification number and its assembly drawing. All equipment shall be identified at the shop with a metal tag or other permanent material securely attached to the equipment. Where equipment is not shipped as an assembled unit, each component or sub-assembly shall be properly tagged.

13) Each shipping container shall contain two packing lists, listing all contents of the particular container with one copy in a waterproof envelope inside the container and other copy shall be kept in a metallic pocket in a secure manner outside the container.

14) Inner walls of the package shall be covered with HDPE Tarpaulin sheet of 150 GSM.

15) Desiccant (silica gel to spec IS: 3401) filled in dust free air permeable linean bags shall be provided inside the packing consignments to absorb the moisture during transit. The desiccant quantity shall be minimum 15 TEH (525 g) for 1m3 of air within the packing case.

16) All packages shall be marked with weight and center of gravity. Lifting points for lifting the package shall be clearly marked on the package.

17) All the openings of the equipment shall be closed with 10mm thick plywood sheet and the edges shall be sealed with GI sheet.

18) Sufficient battens (lined with water proof bituminised paper/HDPE Tarpaulin 150 GSM together with rubber sheet) shall be provided at appropriate places to arrest the movement of the goods inside the package during transit. The movement of the equipment in the packing case shall be firmly arrested by firmly fixing the equipment to the bottom of the packing case.

19) All open piping ends on the skid and all open ends of loose-shipped interconnecting piping shall be treated with ‘Shell Ensis Fluid SDC’ and closed off by metal or wooden blanks. The blanks shall be of the same rating as the piping and shall be bolted with a minimum of 4 bolts. A gasket shall be used. Plastic blanks shall not be permitted, except for piping and tubing of 20 mm and smaller.

20) Tube ends and other similar open ends shall be protected from both external damage and ingress of dirt and moisture during transit and while awaiting erection at Site. Flanged pipes shall have their open ends protected by adhesive tape or jointing and then be covered with a wooden blank flange secured by service bolts.

21) Cabinets and panels shall be suitably protected against damage by (sea) water, sand, rough handling and pilferage. They shall be completely enveloped as mentioned in Sl. No. 7 and hermetically sealed. Moisture absorbing silica gel envelopes shall be securely fixed to both the inside and outside of each cabinet\panel.

22) All stencil markings on the outside of casing shall be either of a waterproof material or protected by shellac or varnish to prevent obliteration in transit.

23) The equipment and packing must be provided with greater use of shock absorbent materials to with stand the rough conditions of the road during transport.

COPYRIGHT AND CONFIDENTIAL
The information on this document is the property of BHARAT HEAVY ELECTRICALS LIMITED.
It must not be used directly or indirectly in any way detrimental to the interest of the company.

24) All shipping containers shall be identified with the Work order No, BHEL Purchase order No, serial order No. / Case No. as identified in the deliverable list, component part, BHEL material (when applicable), Net weight & Gross weight, packing dimensions (L x W x H), markings showing the upright position, sling position, C.G., marking showing the fragile contents and shipping number. On all the shipping containers following shall be marked with bold letters “GAS TURBINE ITEMS” and equipment name (like VENT FAN, INLET DUCT, GT ENCLOSURE etc.).

25) On the packing list, the applicable drawing number, components and part number of the equipment shall be clearly marked. Each component that is shipped shall be identified and keyed to the packing list.

26) All equipment shall leave the Vendor’s facility in a clean and dry condition both inside and outside.

27) Shipping braces, covers etc. to be removed at installation, shall be painted yellow.

28) Un-protected surfaces of steel and cast iron components, tools, bearings, shaft seals etc. shall be covered with VCI paper.

29) When more than one shipping container is required, vendor shall provide suitable container marking for identification of the parts at site. Assembly instructions shall be included with each shipment.

30) Instruments, impulse lines and tubing, where removed, shall be tagged and crated. Open ends shall be properly sealed. Tubing between skids shall be provided with unions at the skid edge, cabling between skids shall be coiled and clearly tagged.

31) All sharp corners and edges shall be protected by covering with rubber mats to prevent damage to the packing.

32) The timber used shall be of non-coniferous type as per specification HY51463 for Beams & Runners. Ply Wood planks as per specification IS:303 Gr. “MR” Type A,B shall be used for the Sides, Top & Bottom of the Packing Cases.

33) Adequate preservation for 6 months shall be provided while packing.

34) **Closed Packing Case**

Closed packing case shall be constructed as per the following minimum. The packing shall be seal tight.

- Bottom 20mm thick PLYWOOD with beading.
- All sides and top 12mm thick PLYWOOD with beading.
- Adequate battens lined with HDPE Tarpaulin 150 GSM and rubber sheet to prevent the movement of equipment/component inside the packing case.
- Inner surface of the packing case covered with HDPE Tarpaulin 150 GSM.
- Outer surface of the packing case covered with 0.3 to 0.4 mm thick GI sheet to spec IS: 277 GR 450.
- Adequate wooden pieces and rubber sheets shall be provided between the components, around sharp corners & edges to prevent damage.
- Window shall be provided on the packing case for customs inspection.

COPYRIGHT AND CONFIDENTIAL
The information on this document is the property of BHARAT HEAVY ELECTRICALS LIMITED.
It must not be used directly or indirectly in any way detrimental to the interest of the company.

35) **Steel Crate Packing**

Steel crate packing shall be constructed as per the following minimum.

- Steel structural frame using beams, channels around the ducts / structures (designed for the lifting load).
- All sides of the steel frame shall be closed with 12 mm thick plywood.
- Outer surface covered with 0.4 mm thick GI sheet to spec IS: 277 GR 450.
- Adequate wooden pieces and rubber sheets shall be provided between the ducts / structures, around sharp corners & edges.
- Provision for lifting shall be provided on the steel crates.
- Window shall be provided on the packing for customs inspection.

3.0 **Vent Fan**

1) All the flange openings of the fan shall be closed with 10mm thick plywood sheet and the edges shall be sealed with GI sheet.
2) Fan & drive motor assembly and all other components (dampers, transition ducts, rain hoods, bird screen, silencer, CO2 latch, tubing, connectors, limit switch, gaskets; fasteners etc.) shall be wrapped with minimum **3 – Layer Wrapping**.
3) All the components including fan & drive motor assembly shall be packed in **Closed Packing Case**.

CLOSED PACKING CASE

4) Fan & drive motor assembly shall be rigidly fixed to the bottom of the packing case with screws. Adequate battens lined with HDPE Tarpaulin 150 GSM and rubber sheet shall be provided around the fan assembly to arrest the movement.
5) The packing of fan and drive motor must be designed to sustain transportation and handling effect loads of up to 2g.

COPYRIGHT AND CONFIDENTIAL
The information on this document is the property of BHARAT HEAVY ELECTRICALS LIMITED.
It must not be used directly or indirectly in any way detrimental to the interest of the company.

6) Stainless steel material like tubing, CO2 latch, bird mesh shall be packed in separate packing case.

7) Adequate wooden pieces and rubber sheets shall be provided between the components, around sharp corners & edges to prevent damage.

4.0 Vent Duct

1) All the flange openings of the duct shall be closed with 10mm thick plywood sheet and the edges shall be sealed with GI sheet.

2) All the components (ducts, expansion joint, structural members, dampers, CO2 latch, rain hood, bird mesh, gaskets, fasteners etc.) shall be wrapped with minimum **3 – Layer Wrapping**.

3) Expansion joint, dampers, CO2 latch, rain hood, bird mesh, gaskets, fasteners etc. shall be packed in **Closed Packing Case**.

4) Stainless steel material like CO2 latch, bird mesh shall be packed in separate packing case.

5.0 Inlet duct

1) All the flange openings of the ducts, silencer duct, elbow ducts, transition duct, plenum covers shall be closed with 12 mm thick plywood sheet and the edges shall be sealed with GI sheet.

DUCT OPENINGS CLOSED WITH 12 MM THICK PLYWOOD SHEET AND EDGES SEALED WITH GI SHEET

2) All the components (ducts, silencer duct, silencer panels, elbow ducts, transition duct, plenum covers, expansion joints, structural members, bleed heat piping, trash screen, gaskets, fasteners, foundation bolts etc.) shall be wrapped with minimum **3 – Layer Wrapping**.

COPYRIGHT AND CONFIDENTIAL
The information on this document is the property of BHARAT HEAVY ELECTRICALS LIMITED.
It must not be used directly or indirectly in any way detrimental to the interest of the company.

3) Silencer panels, expansion joints, structural members etc. shall be packed in **Steel Crate Packing**. Silencer panels shall be stacked vertically in the steel crates.
4) Structural members should not protrude outside the steel crates.
5) Stainless steel material like bleed heat piping, trash screen etc. shall be packed in separate packing case.
6) Bleed heat piping, gussets, foundation plates, gaskets, fasteners, foundation bolts, guide blocks etc. shall be packed in **Closed Packing Case**.

INLET DUCT PACKING

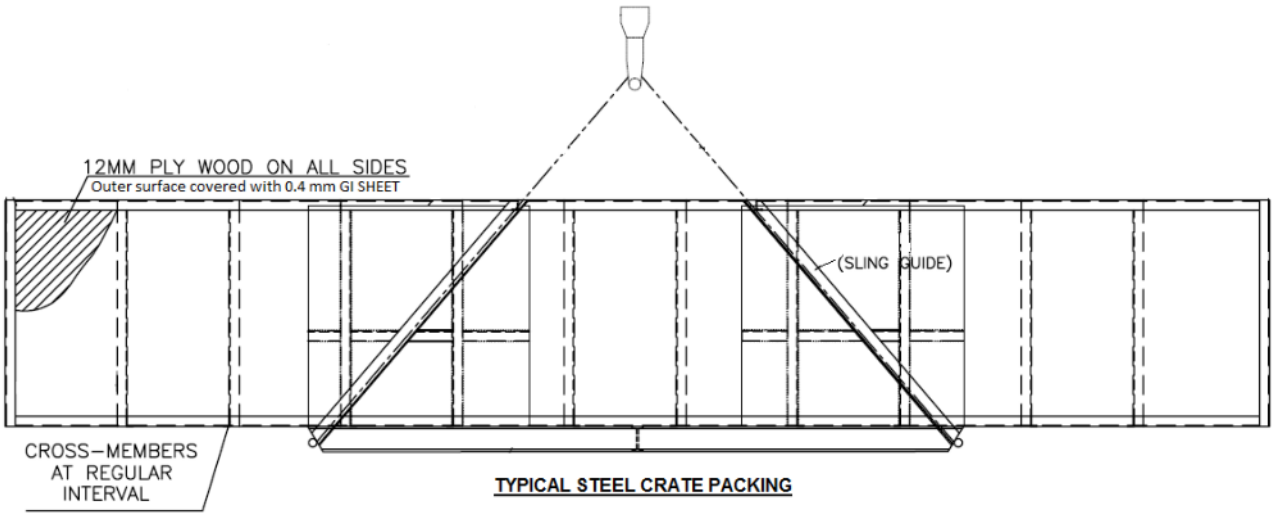

TYPICAL STEEL CRATE PACKING

COPYRIGHT AND CONFIDENTIAL
The information on this document is the property of BHARAT HEAVY ELECTRICALS LIMITED.
It must not be used directly or indirectly in any way detrimental to the interest of the company.

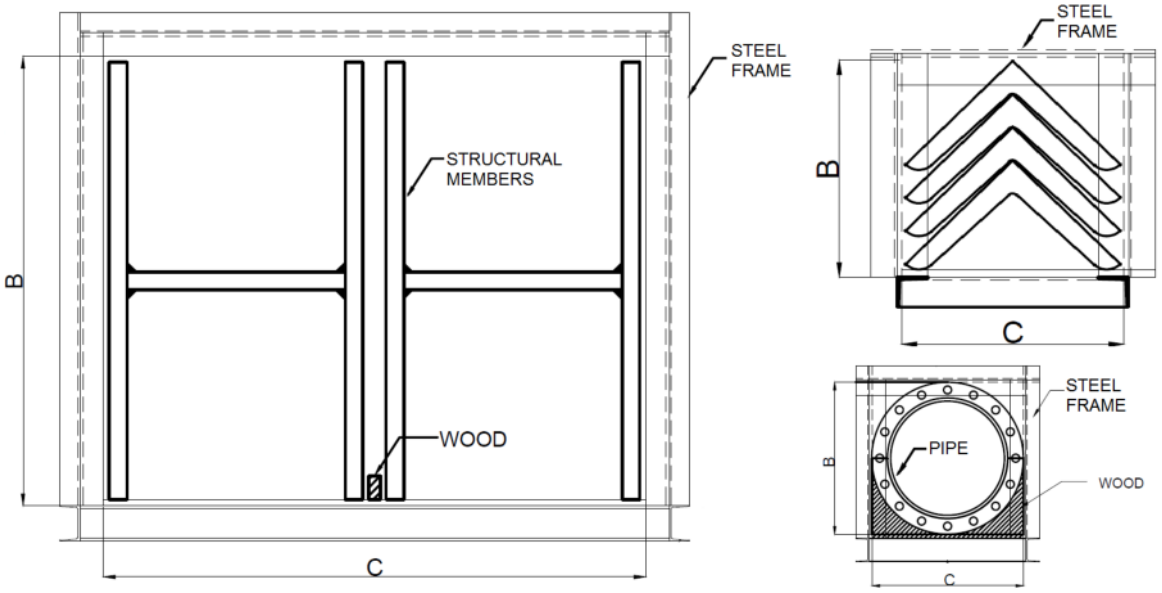

6.0 **GT & Generator Enclosure, GVM Enclosure, Water injection skid Enclosure**

1) All the components (wall panels, door panels, roof panels, dampers, ducts, rain hood, ladder, cage, grating, platforms, structural members, railing, chequered plates, CO2 piping & nozzles, electrical conduit & fittings, limit switches, junction boxes, light fixtures, switches, cables, gaskets, fasteners, foundation items etc.) shall be wrapped with minimum **3 – Layer Wrapping**.
2) Wall panels, door panels, roof panels, ladder, cage, grating, platforms, structural members etc. shall be packed in **Steel Crate Packing**. Panels shall be **stacked vertically** in the steel crates.
3) Panels, structural members should not protrude outside the steel crates.
4) Dampers, ducts, rain hood, railing, CO2 piping & nozzles, electrical conduit & fittings, limit switches, junction boxes, light fixtures, switches, cables, gaskets, fasteners, foundation items etc. shall be packed in **Closed Packing Case**.
5) Stainless steel material like CO2 latch, tube & fittings etc. shall be packed in separate packing case.

COPYRIGHT AND CONFIDENTIAL
The information on this document is the property of BHARAT HEAVY ELECTRICALS LIMITED.
It must not be used directly or indirectly in any way detrimental to the interest of the company.

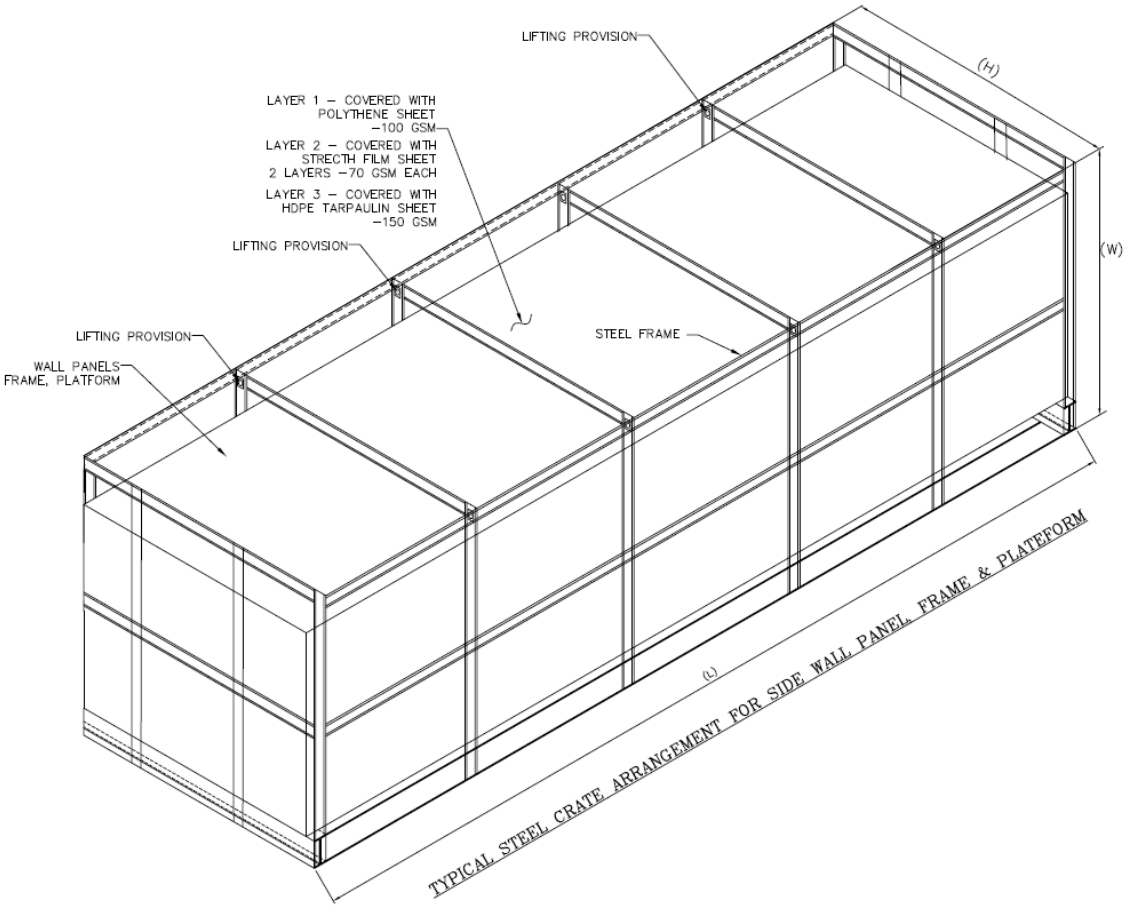

7.0 **Exhaust duct & Bypass stack**

1) All the flange openings on the plenum extension covers, horizontal ducts, silencer duct, elbow duct, transition duct etc. shall be closed with 12 mm thick plywood sheet and the edges shall be sealed with GI sheet.

2) All the components (plenum extension covers, horizontal ducts, vertical ducts, silencer duct, silencer panels, elbow duct, transition ducts, expansion joints, structural members, platforms, ladders, hand railing, junction box, aviation lamp, lightening arrester, cabling, GI strip, gaskets, fasteners, foundation plates & bolts etc.) shall be wrapped with minimum **3 – Layer Wrapping**.

COPYRIGHT AND CONFIDENTIAL
The information on this document is the property of BHARAT HEAVY ELECTRICALS LIMITED.
It must not be used directly or indirectly in any way detrimental to the interest of the company.

Layer 1 - Polythene sheet of 100 GSM

Layer 2 - Two layers of stretch film sheet of 70 GSM (each)

COPYRIGHT AND CONFIDENTIAL
The information on this document is the property of BHARAT HEAVY ELECTRICALS LIMITED.
It must not be used directly or indirectly in any way detrimental to the interest of the company.

Layer 3 - HDPE Tarpaulin sheet of 150 GSM

3) Silencer panels, expansion joints, structural members etc. shall be packed in **Steel Crate Packing**. Silencer panels shall be **stacked vertically** in the steel crates.
4) Structural members should not protrude outside the steel crates.
5) Hand railing, junction box, aviation lamp, lightening arrester, cabling, GI strip, gaskets, fasteners, foundation plates & bolts etc. shall be packed in **Closed Packing Case**.
6) Stainless steel material like bleed heat piping, trash screen etc. shall be packed in separate packing case.

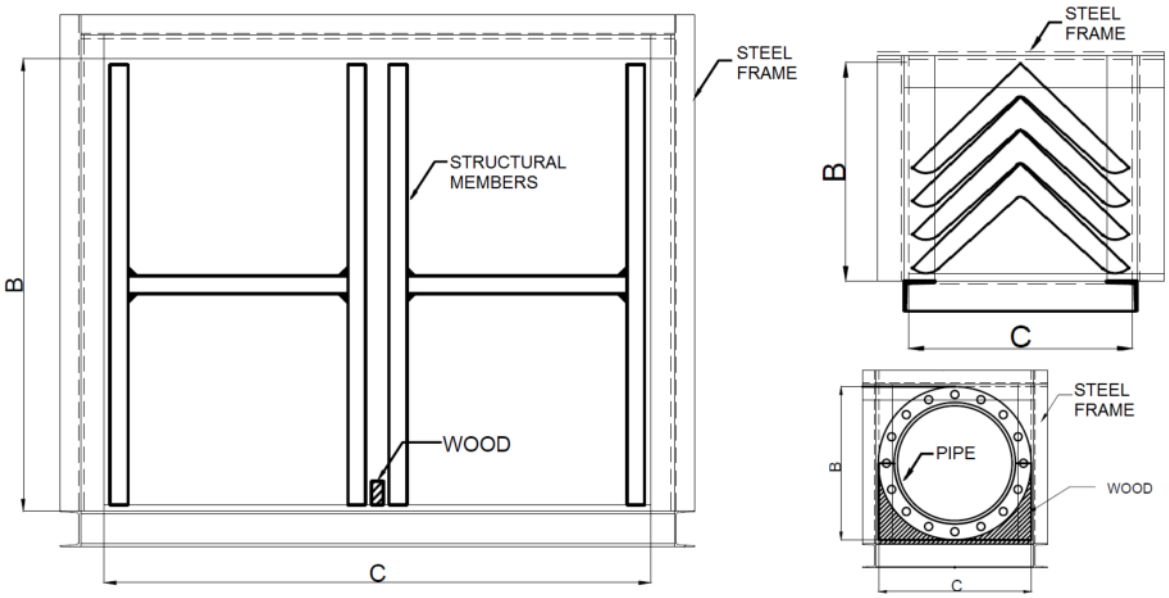

COPYRIGHT AND CONFIDENTIAL
The information on this document is the property of BHARAT HEAVY ELECTRICALS LIMITED.
It must not be used directly or indirectly in any way detrimental to the interest of the company.

8.0 **Exhaust frame blower**

1) All the flange openings on the blower shall be closed with 10mm thick plywood sheet and the edges shall be sealed with GI sheet.
2) Blower & drive motor assembly and all other components (dampers, transition duct, silencer, rain hoods, supports, gaskets; fasteners, foundation bolts etc.) shall be wrapped with minimum **3 – Layer Wrapping**.
3) All the components including blower & drive motor assembly shall be packed in **Closed Packing Case**.
4) Blower & drive motor assembly shall be rigidly fixed to the bottom of the packing case with screws. Adequate battens lined with HDPE Tarpaulin 150 GSM and rubber sheet shall be provided around the fan assembly to arrest the movement.
5) The packing of blower and drive motor must be designed to sustain transportation and handling effect loads of up to 2g.
6) Adequate wooden pieces and rubber sheets shall be provided between the components, around sharp corners & edges to prevent damage.

9.0 **Diverter Damper**

1) All the flange openings on the Diverter damper shall be closed with 12 mm thick plywood sheet and the edges shall be sealed with GI sheet.
2) All the components (Diverter damper casing, blade, flap arm, shafts, tie rods, toggle arm, drive assembly, gear boxes, valves, actuators, flap pivot, seals, bearings, insulation, cladding sheet, butterfly damper, seal air fans, piping, expansion bellow, support legs, brackets, junction boxes, limit switches, pressure switch, position transmitter, gaskets, fasteners, foundation plates & bolts etc.) shall be wrapped with minimum **3 – Layer Wrapping**.
3) Components like flap arm, shafts, tie rods, gear boxes, drive assembly, connecting rods, toggle arm, valves, actuators, flap pivot, seals, bearings, insulation, cladding sheet, hand railing, butterfly damper, seal air fans, piping, expansion bellow, support legs, brackets, junction boxes, limit switches, pressure switch, position transmitter, gaskets, fasteners, foundation plates & bolts etc. shall be packed in **Closed Packing Case**.
4) Adequate quantity of thermo coal shall be provided all around the control panel and electronic items packing.
5) Diverter casing, damper blade, shaft and drive units shall be packed in **Steel Crate Packing**.
6) The packing of drive assembly, actuators, gear boxes etc. must be designed to sustain transportation and handling effect loads of up to 2g.
7) Stainless steel material shall be packed in separate packing case.
8) Adequate wooden pieces and rubber sheets shall be provided between the components, around sharp corners & edges to prevent damage.

COPYRIGHT AND CONFIDENTIAL
The information on this document is the property of BHARAT HEAVY ELECTRICALS LIMITED.
It must not be used directly or indirectly in any way detrimental to the interest of the company.

10.0 **Guillotine Damper**

1) All the flange openings on the Guillotine damper shall be closed with 12 mm thick plywood sheet and the edges shall be sealed with GI sheet.
2) All the components (Guillotine damper frame, blade, rack, shaft, sprocket, rack enclosure, drive assembly, gear box, shut off valve, actuators, flap pivot, seals, bearings, insulation, cladding sheet, butterfly damper, seal air fans, piping, expansion bellow, support legs, brackets, junction boxes, limit switches, pressure switch, position transmitter, gaskets, fasteners, foundation plates & bolts etc.) shall be wrapped with minimum **3 – Layer Wrapping**.
3) Components like flap arm, shafts, tie rods, gear boxes, drive assembly, connecting rods, toggle arm, shut off valve, actuators, flap pivot, seals, bearings, insulation, cladding sheet, hand railing, butterfly damper, seal air fans, piping, expansion bellow, support legs, brackets, junction boxes, limit switches, pressure switch, position transmitter, gaskets, fasteners, foundation plates & bolts etc. shall be packed in **Closed Packing Case**.
4) Adequate quantity of thermo coal shall be provided all around the control panel and electronic items packing.
5) Guillotine damper casing, damper blade, shafts and drive units shall be packed in **Steel Crate Packing**.
6) The packing of drive assembly, actuators, gear boxes etc. must be designed to sustain transportation and handling effect loads of up to 2g.
7) Stainless steel material shall be packed in separate packing case.
8) Adequate wooden pieces and rubber sheets shall be provided between the components, around sharp corners & edges to prevent damage.

11.0 **Inlet Air filter**

1) All the components (Filter modules, roof panels, air cooler modules, transition duct, Inlet hood, Filter elements, filter pads, hoist, Hooper, control panel, electronic items, cable, piping, valves, support structure, platforms, railing, staircase, fasteners, foundation bolt etc.) shall be wrapped with minimum **3 – Layer Wrapping**.
2) Filter elements, filter pads, electronic items, control panel shall be packed in **non-refundable shipping containers**.
3) Adequate quantity of thermo coal shall be provided all around the control panel and electronic items packing.
4) All other components (Filter modules, roof panels, air cooler modules, Inlet hood, hoist, Hooper, cables, piping, valves, support structure, platforms, railing, staircase, fasteners, foundation bolt etc.) shall be packed in **Closed Packing Case**.
5) Flange openings of the ducts shall be closed with 12 mm thick plywood sheet and the edges shall be sealed with GI sheet.
6) Stainless steel material shall be packed in separate packing case.
7) Adequate wooden pieces and rubber sheets shall be provided between the components, around sharp corners & edges to prevent damage.

COPYRIGHT AND CONFIDENTIAL
The information on this document is the property of BHARAT HEAVY ELECTRICALS LIMITED.
It must not be used directly or indirectly in any way detrimental to the interest of the company.

12.0 **CO2 fire fighting system**

1) All the components (CO2 cylinder container, CO2 cylinders, solenoid valve, hoses, NRVs, SRVs, CO2 enclosure, lockout valves, AC indoor & outdoor units, control panel, battery and battery charger, junction boxes, hooters, EPBs, strobe lights, pressure switch, battery, glands, EOL Resister, limit switch, electronic modules, online weighing device, directional valve, CO2 nozzles etc.) shall be wrapped with minimum **3 – Layer Wrapping**. Wrapping near the valve part of the CO2 cylinder shall be avoided.
2) Except CO2 cylinder container & CO2 cylinders, all other components like solenoid valve, hoses, NRVs, SRVs, CO2 enclosure, lockout valves, AC indoor & outdoor units, control panel, battery and battery charger, junction boxes, hooters, EPBs, strobe lights, pressure switch, battery, glands, EOL Resister, limit switch, electronic modules, online weighing device, directional valve, CO2 nozzles etc. shall be packed in **Closed Packing Case**. Adequate quantity of thermo coal shall be provided all around the control panel and electronic items packing.
3) CO2 cylinder container shall be packed in **Steel Crate Packing**.
4) CO2 cylinders shall be packed in steel crate covered by wooden plank of 200 mm width on all sides. Adequate rubber sheets shall be provided between the cylinders and between cylinders & steel crate to protect the cylinder surface.

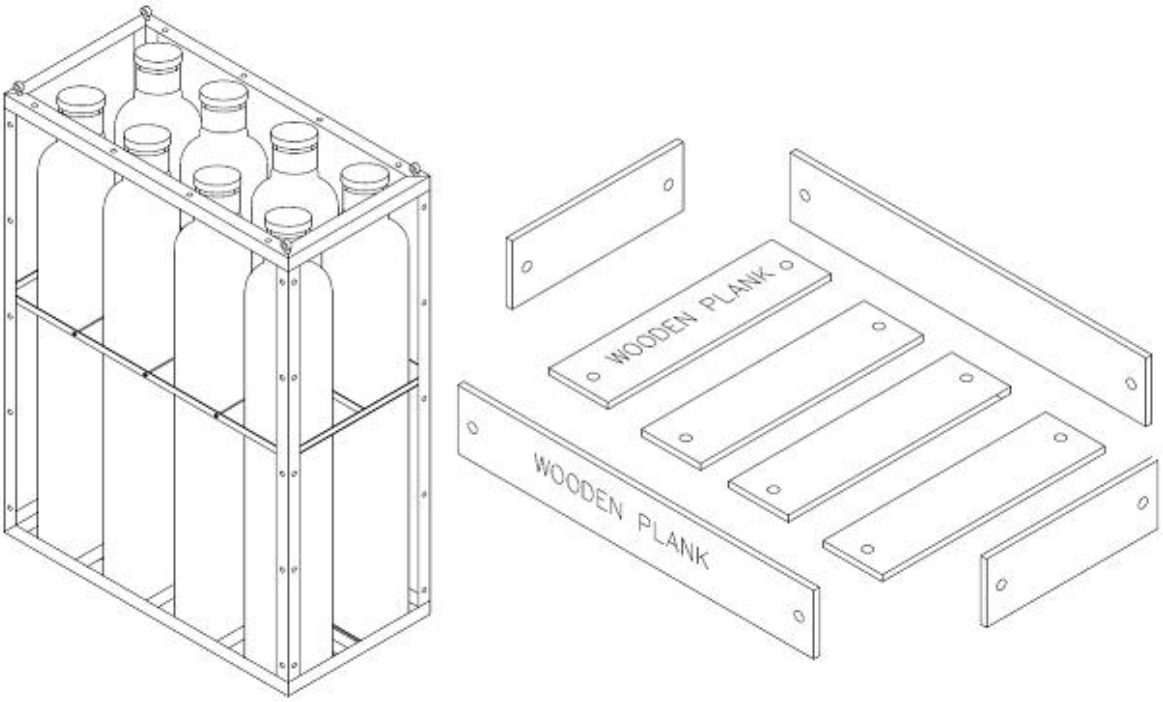

5) Stainless steel material shall be packed in separate packing case.
6) Adequate wooden pieces and rubber sheets shall be provided between the components, around sharp corners & edges to prevent damage.

COPYRIGHT AND CONFIDENTIAL
The information on this document is the property of BHARAT HEAVY ELECTRICALS LIMITED.
It must not be used directly or indirectly in any way detrimental to the interest of the company.

13.0 **Oil Mist eliminator**

1) Mist eliminator unit and other loose items shall be wrapped with minimum **3 – Layer Wrapping**.
2) Mist eliminator unit and other loose items shall be packed in **Closed Packing Case**.

14.0 **Air processing unit / Air dryer unit.**

1) Air processing unit and other loose items shall be wrapped with minimum **3 – Layer Wrapping**.
2) Air processing unit and other loose items shall be packed in **Closed Packing Case**.

15.0 **Fin tube cooler**

1) Fin tube cooler unit and other loose items shall be wrapped with minimum **3 – Layer Wrapping**.
2) Fin tube cooler unit and other loose items shall be packed in **Closed Packing Case**.

16.0 **Portable lube oil drain pump**

1) Portable drain pump unit and other loose items shall be wrapped with minimum **3 – Layer Wrapping**.
2) Portable drain pump unit and other loose items shall be packed in **Closed Packing Case**.

17.0 **Lube oil centrifuge**

1) Lube oil centrifuge unit and other loose items shall be wrapped with minimum **3 – Layer Wrapping**.
2) Lube oil centrifuge unit and other loose items shall be packed in **Closed Packing Case**.

18.0 **Compressor water wash skid**

1) Water wash skid, foundation and other loose items shall be wrapped with minimum **3 – Layer Wrapping**.
2) Foundation and other loose items shall be packed in **Closed Packing Case**.

19.0 **Forced feed lube oil system**

1) Forced feed lube oil system and other loose items shall be wrapped with minimum **3 – Layer Wrapping**.
2) Foundation and other loose items shall be packed in **Closed Packing Case**.

COPYRIGHT AND CONFIDENTIAL
The information on this document is the property of BHARAT HEAVY ELECTRICALS LIMITED.
It must not be used directly or indirectly in any way detrimental to the interest of the company.

20.0 **Containerisation for Dangote and other export projects**

1. After packing the items as specified in clause 1.0 to 19.0, all the items shall be securely placed inside the ISO container to ensure protection during handling and transportation. Only those items which are dimensionally does not fit in standard ISO containers are excluded. Vendor to clearly indicate in the offer for BHEL review during technical scrutiny.
2. All boxes/packages shall be properly secured inside the container using standard lashing, straps, chocks, timber blocking or suitable supports to prevent shifting, sliding, tipping or impact during handling and transportation.
3. Heavy packages shall be placed at the bottom and the load shall be properly distributed within the container. Stacking shall be permitted only where the package is designed for stacking.
4. Adequate clearance and protection shall be maintained between packages and container walls/doors to prevent damage, rubbing or impact during transportation. No fastening shall be made directly on sensitive or finished surfaces.
5. The container shall be clean, dry and free from water ingress or damage before loading.
6. Containerisation shall be planned to minimise the total number of containers, while maintaining safe packing, handling and transportation requirements.
7. Packing shall be designed considering the maximum permissible dimensions, weight and payload of the selected ISO container.
8. Container shall be suitable for outdoor storage at site until installation.
9. Each container shall have a container-wise packing list/manifest identifying the BHEL PO number, material codes, package number, equipment description, quantity and weight of all packages loaded inside.
10. Before closing the container, the vendor shall verify the packing, securing, load distribution and identification, and shall maintain photographs of the loaded container as part of the dispatch records.
11. Numbers of containers and respective packing list shall be informed to BHEL before dispatch clearance to site.
12. The container floor shall be with anti-skid covers.
13. Vendor shall provide the box layout with this container with reference to the packing list box reference. The same shall be pasted in and out of the container.
14. Vendor shall provide container wise uniform weight distribution and provide the lifting arrangement drawing with CG details.

15. One hand held torch with clamp shall considered in each container for usage during material retrieval.
16. Container shall be painted in and out .BHEL shall provide the pre-defined package tags and container tags to be maintained by vendor.
17. ”BHEL” logo shall be stencilled on either side of each container. Unit number and container number shall be written on the opening door of container. This will help to stack all container of one unit at same location. Also Container serial numbers will confirm the completeness.
18. Refer BHEL spec HY7842007 for requirements of general cargo containers.

COPYRIGHT AND CONFIDENTIAL
The information on this document is the property of BHARAT HEAVY ELECTRICALS LIMITED.
It must not be used directly or indirectly in any way detrimental to the interest of the company.

RECORD OF REVISIONS

Rev. No.	Date	Revision Details	Revised	Approved
00	24.07.13	First Made	-	-
01	24.10.15	Clause 19.0 added.	VSH	ECS
02	31.07.26	Generally revised	CHK	SRIKANTH
03	05.09.26	Containerisation requirements added for export projects (Pg 15&16)	PARVATHI	SRIKANTH

COPYRIGHT AND CONFIDENTIAL
The information on this document is the property of BHARAT HEAVY ELECTRICALS LIMITED.
It must not be used directly or indirectly in any way detrimental to the interest of the company.

Ref. Doc

COPYRIGHT AND CONFIDENTIAL
The information on this document is the property of BHARAT HEAVY ELECTRICALS LIMITED.
It must not be used directly or indirectly in any way detrimental to the interest of the company.

SPECIFICATION FOR SUPERVISION OF ERECTION AND COMMISSIONING OF GUILLOTINE DAMPER

1.0 Scope

This specification covers the scope of services to be provided by the Guillotine damper supplier for Supervision of Erection and commissioning of Guillotine Damper at the Dangote Project, Nigeria.

2.0 Site Details-

DPRP EXPANSION PROJECT (DEP), NIGERIA
LEKKI FREE TRADE ZONE, NIGERIA
APAPA PORT, NIGERIA
MURTALA MUHAMMED INTERNATIONAL AIRPORT
LAGOS, NIGERIA

3.0 Scope of the Work:

3.1 Supervision of Erection and Commissioning of the Guillotine damper supplied/ to be supplied against BHEL PO/PR as indicated in variant table-1.
3.2 The duration of this work is 21 Working days at site (Excluding onward & return days) unless no of working days are specified separately in the Variant Table.
3.3 Any services that are required for proper installation and safe reliable operation of the Guillotine Damper shall be identified and provided by the Supplier.

4.0 Vendor should quote for the following:

4.1 The Lump sum price to be quoted for Supervision of Erection and commissioning of the Guillotine damper for 21 Working days shall include the Visa Processing, Service charges, Local Transportation, Food expenses and insurance. This Lump sum price will be considered for L1 vendor Evaluation.
4.2 Overseas medical Insurance is in vendor's scope.
4.3 Vendor has to quote per diem charges separately. These charges will come into effect, if stay is extended beyond the stipulated 21 Working days limit. The vendor may quote an escalation rate for supervision charges if the supervision requirement extends beyond the 2-year validity period from the date of Dispatch of main Equipment.
4.4 Per Diem rates shall apply from the day the supervisory personal reach site and up to the day he leaves site. No per diem payment will be made for travel period.
4.5 Per diem rates shall exclude the to and fro air Tickets.
4.6 Payment (at actuals) will be released based on site certification.

4.7 To and fro air tickets (economy class) from the nearest International Airport in India to International Airport at Lagos, Nigeria will be arranged by BHEL or reimbursed by BHEL at actuals.

4.8 Suitable accommodation within site premises / nearby site will be arranged by BHEL or reimbursed by BHEL at actuals

4.9 Vendor to indicate idling charges on per diem basis.

4.10 The Vendor shall clearly indicate the minimum mobilization period required for deployment of the required personnel at site. The mobilization period shall be considered from the date of receipt of the Employer's / BHEL's formal instruction to mobilize.

COPYRIGHT AND CONFIDENTIAL
The information on this document is the property of BHARAT HEAVY ELECTRICALS LIMITED.
It must not be used directly or indirectly in any way detrimental to the interest of the company.

VARIANT TABLE-1

Var. No.	GT Frame/ Services to	PO/PR (As applicable)	Site Information	Service PR details
01	8XFR-6B DANGOTE NIGERIA	Main Equipment PR: 1900170926 (Unit#1) 1900170928 (Unit#2) 1900170960 (Unit#3) 1900170962 (Unit#4) 1900170964 (Unit#5) 1900170966 (Unit#6) 1900170968 (Unit#7) 1900170970 (Unit#8)	DPRP EXPANSION PROJECT (DEP), NIGERIA	1600035652 (Unit#1) 1600035653(Unit#2) 1600035616 (Unit#3) 1600035617 (Unit#4) 1600035618 (Unit#5) 1600035619 (Unit#6) 1600035690 (Unit#7) 1600035691(Unit#8) Payment will be made against actual man-days at site & as certified by BHEL site engineer

COPYRIGHT AND CONFIDENTIAL
The information on this document is the property of BHARAT HEAVY ELECTRICALS LIMITED.
It must not be used directly or indirectly in any way detrimental to the interest of the company.

RECORD OF REVISIONS

Rev. No.	Date	Revision Details	Revised By	Approved By
00	03.09.26	First made.	KRANTHI	Suresh V

COPYRIGHT AND CONFIDENTIAL
The information on this document is the property of BHARAT HEAVY ELECTRICALS LIMITED.
It must not be used directly or indirectly in any way detrimental to the interest of the company.

COPYRIGHT AND CONFIDENTIAL
The information on this document is the property of BHARAT HEAVY ELECTRICALS LIMITED.
It must not be used directly or indirectly in any way detrimental to the interest of the company.

GT GUILLOTINE DAMPER ELECTRIC MOTOR OPERATED

1.0 DESCRIPTION

This specification defines the requirements of Guillotine Damper used in the Gas Turbine exhaust system of Combined Cycle/Cogen Gas Power Plants. The Guillotine damper is used to isolate Heat recovery steam generator (HRSG) from Gas Turbine.

The Guillotine damper is a key component of the gas turbine exhaust system. The damper being offered by vendors shall be highly reliable for gas turbine service. The damper shall be suitable for daily starts and shutdowns.

2.0 SCOPE:

The scope shall include Design, manufacturing, Testing, Packing and Transport of guillotine damper. The scope consists complete guillotine damper with drive assembly, sealing system, controls, instrumentations, all accessories and commissioning spares as required. Supply shall be as per Variant Table-2 for variant number mentioned in enquiry.

2.1 One set of special tools if required for erection of the equipment quoted shall be included part of scope.

2.2 Bolts, nuts, washers, taper washers for structural flanges, high temperature gaskets, etc. for connections to mating ductwork flanges, support sole plates, and foundation bolting materials etc. shall be included part of scope.

2.3 Spare parts for erection and commissioning for the above damper as per given clause.

3.0 APPLICABLE DOCUMENTS

The following are the applicable Specifications and Standards with latest effective issues on the date of invitation for bids or request for proposal and will form part of the specification of the Product Standard as listed herein below.

3.1 SPECIFICATIONS AND STANDARDS

GENERAL: Nothing in this specification shall be construed to relieve the seller / supplier of his responsibility for his compliance with all applicable codes and regulations.

3.2 The following standards shall apply:

American Federation of Bearing Manufacturers Association (AFBMA)

American Gear Manufacturers Association (AGMA)

Instrument Society of America (ISA)

American Institute of Steel Construction (AISC)

Uniform Building Code (UBC)

American Welding Society (AWS)

American National Standards Institute (ANSI)

American Society for Testing and Materials (ASTM)

American Society of Mechanical Engineers (ASME)

Sections-II – ASME Boiler and Pressure Vessel Code – Material Specifications, Part A – Ferrous and Part C.

Section VIII – Division I – ASME Boiler and Pressure Vessel Code – Unfired Pressure Vessel.

Sections-IX – ASME – Boiler and Pressure Vessel Code Welding Qualifications.

American Society of Non-Destructive Testing (ASNT)

COPYRIGHT AND CONFIDENTIAL
The information on this document is the property of BHARAT HEAVY ELECTRICALS LIMITED.
It must not be used directly or indirectly in any way detrimental to the interest of the company.

IS-1893 – Criteria for earthquake resistant designs of Structures.

Structural Steel Painting Council (SSPC)

IS:875-Code of practice for structural safety of building loading standards

IS:2148 or equivalent: Flameproof enclosures, for electrical apparatus (if applicable)

IS:2147 or equivalent: Weather proof enclosures, for electrical apparatus. (if applicable)

IS:4894 Specification for Centrifugal fans

BS: 848 Fans for general purposes (all parts)

IS: 325 Specification of three phase induction motors.

IS:4691 Degree of Protection provided by enclosures for rotating electrical machinery.

IS: 4729 Measurement of vibration (Fans)

IS:800 Code of practice for general construction in steel.

SIS-S900 (Swedish Standard) Surface Cleaning.

IS:1477 (Part-1) Surface Cleaning.

National Electric code (NEC) (USA).

4.0 TECHNICAL REQUIREMENTS

The following are the general and basic requirements to be followed in the design, manufacture, testing, witnessing, proper packing and despatch of the damper but not in any way limited to adoption of advanced and latest state of art in design or technology.

GENERAL

The centre line of the damper along the flow path shall match with the exhaust duct mating centre line. The unit shall be supported on adequately designed suitable support structure which is mounted on buyer's concrete foundation. Exact centre line height of the damper from support point will be indicated after the contract is finalised.

The damper shall also need adequate supporting points to be connected with GT Bypass stack structure. Provision location of such support points & necessary hardware shall be provided in the supply interfacing of which will be intimated after finalising the contract.

For large size damper with flow area size greater than 3048x3048 mm, the damper shall be designed in Bolt able modular construction, the assembly of which shall be indicated in the offer and details of which shall be explained with figures and Part nos. under the topic Erection, in O&M Manual. The details shall include Quality Control points to be adopted at site with the help of drawings and write ups and formats / tables for recording alignment values in site. All these details shall also appear in the General Arrangement drawing to be submitted for BHEL's approval.

LOCATION

The damper shall be installed outdoors in a gas turbine power plant exhaust duct system where the environment may be dusty, corrosive & adjacent to high temperature condition. Hence the materials, components etc., shall be so chosen to withstand the rigorous environment condition.

COPYRIGHT AND CONFIDENTIAL
The information on this document is the property of BHARAT HEAVY ELECTRICALS LIMITED.
It must not be used directly or indirectly in any way detrimental to the interest of the company.

4.1 **DESIGN:**

Latest in the State of Art and Proven in design and technology.

4.1.1 **TYPE:**

The damper shall be of single blade construction capable of sealing turbine hot exhaust gas to 99.95% efficiency (of flow area) without seal air pressurisation and 100% efficiency with seal air. The same shall be demonstrated (for one gate of each type and size) during shop test and at site after 2000 hrs. of operation on combined cycle mode.

Blade shall be assembled / withdrawn from the top end. No dust / soot shall collect at the bottom or inside periphery of the flow area by adopting good design practice. The damper Bonnet or Hood construction shall be such that operation of above is possible when GT is running. The entire area of damper in the plant falls under hazardous zone (if specified in var. table).

The overall size of the damper and its subassemblies shall be limited in design to that size or made into smaller assemblies that can be transported without violation of Road Rules or without exceeding the maximum transportable size confirmed through road carriers approved by BHEL, list of which can be obtained from Purchase Department, BHEL Hyderabad.

4.1.2 **DRIVE SYSTEM:**

The damper shall be operated by an electric motor using AC power supply. An emergency manual operating provision shall be provided for operating the damper, when the electrical power supply is unavailable.

The electrical actuator for the Guillotine damper shall be capable of controlled/soft closing during last 10 sec. The actuator shall provide adjustable closing speed, with automatic reduction of speed during the final portion of the closing stroke to ensure gradual engagement of the damper sealing surfaces. The actuator shall also incorporate adjustable closing torque limitation to prevent excessive compression, impact, or damage to the seals.

4.1.2.1 The power drive shall be through a worm gear box that shall have positive locking of torsional load on single axis, dismantlable shaft assembly fitted with sprocket / pinion to drive the rack carrying the blade assembly up or down. The entire drive system including the rack, sprocket and all linkages and bearings shall be completely enclosed in **gas tight** enclosure that shall be external to the frame and with facility to permit inspection and maintenance while the turbine is running. Chain drive and screw type systems are not acceptable.

If specified in variant table,

All gear units, motors, limit switches, conduits, junction boxes located outdoors shall be Explosion proof to IS 2148 IIA, IIB, & Protection to IP65. Care is to be taken to prevent unacceptable conduction or radiation of heat to the actuator.

4.1.2.2 Inter locks shall be provided to prevent operation of the main drive while manual operation is being performed & also mechanical locking facility be provided when "closed" with security interlock to stop any unauthorised electrical signal to initiate opening of guillotine damper manually.

4.1.2.3 Electric drive motor & seal air fan motor shall be interlocked electrically in the control panel of IP 55 protection which will approximately by 20 meters away from damper in case damper control panel is in vendor scope.

4.1.3 **TOTAL TIME OF OPENING & CLOSING OF DAMPER** shall be indicated by vendor for each type of operation (i.e., for electric actuator & manual drive).

4.1.4 **HEAT LOSS:** When damper is closed to HRSG the heat transfer through and across the damper not to exceed 20 kilowatt per square meter of the duct cross sectional area.

COPYRIGHT AND CONFIDENTIAL
The information on this document is the property of BHARAT HEAVY ELECTRICALS LIMITED.
It must not be used directly or indirectly in any way detrimental to the interest of the company.

4.1.5 **BLADE AND SHAFT DESIGN:**

4.1.5.1 Blade and shaft sizing shall be based on using no greater than 60 percent of the tensile strength of the material at maximum design temperature and pressure.

4.1.5.2 Shaft deflection must be less than that which can be absorbed by the bearing misalignment capabilities. When calculating shaft deflection, no support can be assumed from the shaft seals to minimize uneven loading and wear of these seals.

4.1.5.3 When Damper Blade is kept open for gas flow the blade shall remain withdrawn into bonnet with provisions to keep the blade in warm enough condition to operate without binding at maximum design conditions of pressure and temperature.

4.1.5.4 The blade shall withdraw clearing off any contact with duct gas in the open position. Internal Blade-guides and stiffeners are required.

4.1.5.4.1 The leading edge of the blade shall be self-cleaning.

4.1.5.4.2 The damper blade shall be constructed with **insulation on both side (min 75mm on each side of the blade**) and the insulation shall be ceramic wool Blanket material with density of min 128 Kg/m^3

4.1.5.5 BEARINGS:

Bearings shall be replaceable without removing the stub shafts.

Bearings shall not require lubrication, be affected by particulate and / or build up of debris, or be affected by the maximum expected temperature. Bearing makes and model / designation numbers shall also be indicated by vendor.

4.1.6 **SEALS:**

4.1.6.1 Seals shall be furnished in segments to compensate for differential expansion between and seal and its mounting.

4.1.6.2 Seals shall be capable of withstanding the turbulence and velocity of the exhaust gas regardless of weather the blade is OPEN/CLOSED or in intermediate position or during travel.

Seals should be capable of sliding within frame assembly details of which shall be included in the mechanical drawings for approval.

4.1.6.3 SEAL MATERIAL: - The seal material shall

i. Maintain adequate mechanical properties for a minimum of four years.

ii. Not be permeable

iii. Not contain asbestos or graphite

iv. Be capable of accommodating distortions in the frame work.

v. Be of Inconel 625only

4.1.7 **SEAL AIR SYSTEM:**

The seal air system shall

i. Be equipped with 2 x 100% seal air system erected on concrete foundation separately at a distance of which shall be indicated during or after enquiry stage and comprise of electric motor driven seal blowers (2 No's) of spark proof construction coupled with AC explosion proof drive motors, suction strainers, air delivery ductwork with isolation valve for each blower. Differential Pressure Transmitter per each drive shall be provided for auto change over to standby fan in case of loss of pressure.

Each Fan inlet shall have inlet silencer and protection guard.

ii. Provide at least 76 mm of water column pressure above operating conditions at to damper.

iii. Seal air system with complete electricals suitably inter locked & connected to control system of main Guillotine Damper, contacts of which shall be connected through a junction box; operation /

COPYRIGHT AND CONFIDENTIAL
The information on this document is the property of BHARAT HEAVY ELECTRICALS LIMITED.
It must not be used directly or indirectly in any way detrimental to the interest of the company.

indication of which shall be included in the control panel and for remote area operation. In case control panel is not in vendor scope as per variant table, all control, signal and power cables are to be located in separate JBS near damper.

4.1.8 **THERMAL INSULATION AND SCOPE:**

4.1.8.1 Insulation shall be internally insulated generally unless otherwise specifically mentioned in variant table. If external insulation is done then all the flange fasteners shall be SS TYPE 409.

4.1.8.2 The damper shall be insulated sufficiently to maintain not greater than 60°C surface temperature at an ambient of 45°C with zero wind velocity.

The insulation shall maintain its integrity at continuous high temperature. Insulation shall be packed inside cladding after covering the glass wool cloth.

Insulation shall be of ceramic type with 128kg/m^3 of density and 250mm minimum thickness.

4.1.9 **INSIDE CLADDING:** Inside cladding material shall be SS 409 sheet of minimum thickness 3.15mm.

4.1.10 **STRUCTURAL DESIGN:**

The damper and all attached equipment will be designed and fabricated in accordance with the applicable documents (Clause 3.0). Exceptions where necessary will be documented by supporting analysis and / or data delineating and engineering logic and provide adequate technical basis for the exception where ***verbatim*** compliance to the said Clause is not possible due to the unique configuration and/or unique design criteria of the exhaust system.

The design shall be capable of sustaining the cyclic operation required by the Clause 4.1.16.

The analysis used in this evaluation shall include the effects of both fatigue and creep.

The method of analysis shall be submitted by the seller to BHEL for approval.

4.1.10.1 The details of this section (ie., 4.1.11), shall apply wherever design analysis is called for in either the specification of the ordering sheet or any reference is made to the applicable documents.

4.1.10.2 Bonnet construction shall be as per IS 2062 with adequate stiffeners with suitable insulation. Strength calculations shall be submitted along with the offer.

4.1.11 **FOUNDATION HARDWARE:**

The vendor shall provide all foundation Hardware's like ***CEMENT*** coated foundation Bolts, galvanized nuts and washers with 10% extra.

4.1.12 **WELDING:**

4.1.12.1 All welding shall be performed by approved welders as per applicable codes.

- Vendor shall follow the all welding's as per the BHEL specification GT54031.
- Vendor shall follow the all pipe welding as per the BHEL specification GT54160.

4.1.13 **FUNCTIONAL REQUIREMENTS:**

I. Design life = 120,000 Hours.

II. Transient operation – To sustain the following start-up transients.

No. of Cycles	Exhaust Temp. Transient Description Exhaust Temp.	Time to Max.
Start-up 5000	30°C Ambient to max. Design Temp.	15 min.

The damper and motor shall function under the following operating conditions:

HRSG Guarantee Maximum Temperature Maximum Flow	}	Please refer Variant Table.
Minimum pressure for structural design is 650mm of Water Column.		

COPYRIGHT AND CONFIDENTIAL
The information on this document is the property of BHARAT HEAVY ELECTRICALS LIMITED.
It must not be used directly or indirectly in any way detrimental to the interest of the company.

4.1.14 **CLEANING AND PAINTING:**

- Refer ANNEXURE -IX for painting schedule.
- Stainless-steel surfaces shall not be painted.

4.2 **PERFORMANCE:**

The complete damper shall be factory assembled and functionally tested.

4.2.1 **SEALING PERFORMANCE:**

The damper shall be guaranteed to provide the following sealing performance for a minimum of 5 years, (Sealing Performance requirement as per scope of supply).

I. Isolation leakage less than or equal to 0.1% of mass flow without sealing air.

or

II. Isolation leakage equal to 0% of mass flow with sealing air.

4.2.2 **PERFORMANCE TESTING**

Details shall be provided of tests previously undertaken preferable certified by an approved organisation, to show that each of damper can achieve the required and/or quoted sealing efficiency. Information's shall be provided on the procedures used to account for variations in temperature and pressure.

Performance testing shall include

a) Damper operation and actuation time.

b) Seal air Fan motor noise level limited to 85db at 1-meter distance in supplier's works environment.

c) Power/Current drawing by all motors including that of all actuators at site operating conditions and

d) Recording of temperature rise in motors to the limit specified elsewhere in this specification and skin temperature on Frame at operating condition at site.

e) Sealing efficiency. (As per BHEL/Customer approved procedure)

4.3 **ENVIRONMENT**

I. The HRSG and damper shall be installed outdoors.

II. For further information if any refer variant table.

4.4 **RELIABILITY, DESIGN LIFE MAINTAINABILITY, AND SAFETY**

BHEL goals are to provide equipment's which maximize reliability, availability, and maintainability of the combined cycle plant. The vendor shall ***demonstrate***, by field experience and/or by calculation, the reliability, design life, maintainability, and safety of the dampers and actuators.

4.4.1 **SAFETY IN DESIGN:**

The vendor shall assess and test the safety of his product and shall provide design operating and maintenance instructions, all warnings and instructions which, in the opinion of the vendor are necessary to preclude occurrence of hazardous conditions or to define and minimise the risk of potentially hazardous conditions. A hazardous condition is defined as one which may cause personnel injury or death due to the installation, operation, failure, servicing, repair of disposal of the vendor products.

4.5 **MATERIALS:**

Materials selected shall be compatible with the requirements of this specification and in addition should be chosen for quality associated with long life and resistance to corrosion wear and other forms of deterioration.

COPYRIGHT AND CONFIDENTIAL
The information on this document is the property of BHARAT HEAVY ELECTRICALS LIMITED.
It must not be used directly or indirectly in any way detrimental to the interest of the company.

4.6 **PHYSICAL REQUIREMENTS:**

4.6.1 **CLEANLINESS AND WORKMANSHIP:**

All parts, components and assemblies shall be thoroughly cleaned prior to and after assembly and test, including removal by smooth grinding of all excess, loose, spattered soldering or welding materials, weld flash, metal chips or other foreign matters, burrs and sharp edges.

All workmanship including packing shall be done in a manner resulting in full compliance with the requirements of this specification and which will provide equipment neat in appearance and ready for intended usage when and as received.

4.6.2 **NAME PLATES AND PRODUCT MARKINGS:**

Equipment's supplied shall be identified by a permanently mounted name plates to which shall include as a minimum the following information's in legible English:

1. Nomenclature	:	
2. Manufactured for	:	BHEL-Hyderabad 502032(INDIA)
3. Serial Number	:	
4. BHEL-Code Number	:	<Material Code>
5. Flow-area dimensions	:	
6. Supplier Name	:	
7. Design temp.	:	<As per Specification>
8. Purchase Order No.	:	

4.6.3 **INTERCHANGEABILITY:**

Individual parts shall be manufactured to standard sizes and gauges to that repair parts, furnished at any time can be installed in the field. Like parts of duplicate units shall be interchangeable.

4.7 **PROPOSAL STAGE DOCUMENTATION:**

4.7.1 INFORMATION TO BE INCLUDED WITH PROPOSAL ARE THE DOCUMENTS REQUIRED TO BE ENCLOSED IN OFFER FOR EVALUATION WITH OUT WHICH THE TECHNICAL OFFER WILL NOT BE CONSIDERED FOR TECHNICAL EVALUATION.

(Vendor must till the check list in Annexure-II for BHEL to consider technical bid).

Information submitted with the proposal shall include but not limited to the following:

I. General arrangement with overall dimensions, centre-line to face and face to face dimensions of damper, control panel, supports and their sizes, foundation locations, their grouting details sole plate size etc.

II. The selection / calculation of load criteria of the actuators, gear boxes, motors, fans with suction filters, air piping pressure drop etc. along with readable copy of the catalogues (makes) of each of bought out items regularly being by the supplier for damper systems.

III. The total time of opening / closing operation for both electric motor operation / manual operation of damper to be given in the General arrangement drawing.

IV. List of Deviations to this specification. Otherwise it will be construed that this specification along with its annexures is fully followed in all respect by the vendor. Deviation or Exceptions must be recorded in the enclosed format, Deviations/Exceptions taken elsewhere will not be considered by BHEL.

V. Structural Calculations.

VI. Foundation detail and loading data.

COPYRIGHT AND CONFIDENTIAL
The information on this document is the property of BHARAT HEAVY ELECTRICALS LIMITED.
It must not be used directly or indirectly in any way detrimental to the interest of the company.

4.7.2 The following paragraphs elaborate the meaning of the requirements of proposal documents under this clause.

4.7.2.1 Complete description of equipment, working, specialties, if any etc. and services offered.

4.7.2.2 Completely Filled in Technical Data Sheets provided in Annexure-I for each damper.

4.7.2.3 All exceptions to these specifications.

4.7.2.4 Complete drawing schedule including approval plan for engineering interface / design review of system integration.

4.7.2.5 Outline drawing showing overall dimensions, and weights, & bill of materials, support arrangement, foot / anchor-points, forces, moments and foundation sole plate & grouting details, connecting duct flange details.

4.7.2.6 List of shipping package – weights, dimensions and handling instructions (see also clause 6.5).

4.7.2.7 Experiences list / copies of similar services with operational hours, size, and conditions with actual data (preferably certified by customers), sealing efficiencies at sites and also actually at test-rig at supplier's works.

4.7.2.8 Engineering / productions fabrication schedule including inspection points.

4.7.2.9 Quality Assurance Certification Plan for comments by BHEL, where BHEL / BHEL's customer may put inspection "Hold" points during stage and final Inspection and to finalize the same (read also clause 5.0) (Xerox copy will not be accepted).

4.7.2.10 Installation requirements and estimated man hours for Installation & Commissioning a quotation for technical personnel assistance by the supplier for the installation and commissioning beyond 15 days of free technical assistance.

4.7.2.11 List of special tools required, if any for installation, erection and / or operation shall be included in offer.

4.7.2.12 List of erection and commissioning spares as minimum envisaged and other recommended spares, if any for the same purpose.

4.7.2.12.1 List of capital spares for start-up and operation for 2 year of service.

4.7.2.13 Utility and consumable requirements for normal operation.

4.7.2.14 Start-up and testing requirements including facilities and utilities.

4.7.2.15 Operating Training - special recommendations, if any.

4.7.2.16 Format to record erection, installation, commissioning, operation and maintenance checks with instructions for measurements reading etc. to fill in the same.

4.7.2.17 AC-loads imposed on the purchaser's power supply (See also clause 4.1.15).

4.7.2.18 Vendor's Company Quality Manual & Product Quality Manual.

4.7.2.19 Confirmation statement for submission of documents after award of contract required as per clause 4.8.

4.8 **INFORMATION AND DOCUMENTATION FOR APPROVAL BY BHEL (AFTER AWARD OF CONTRACT)**

4.8.1 The following information and documentations shall be submitted by the Bidder within 4 weeks of award of Letter of Intent, or placement of purchase order whichever is placed earlier. The documentations will include but not limited to the following.

4.8.2 Final General arrangement and Installation Drawings, Bill of Materials, all Technical Data, Supporting Calculations. Selection Basis of bought out items, Selection and Technical catalogue with makes, model numbers / designation etc. for approval by BHEL / Customer.

4.8.2.1 Electrical Wiring Diagrams, Interconnection diagrams, Details of Control panel & Junction Box, Bill of Materials, Technical Data etc.,

COPYRIGHT AND CONFIDENTIAL
The information on this document is the property of BHARAT HEAVY ELECTRICALS LIMITED.
It must not be used directly or indirectly in any way detrimental to the interest of the company.

4.8.2.2 Insulation mounting plan, quantity, drawing etc. (Refer clause 4.1.9).

4.8.2.3 Sets of preservation, Erection / Installation, Commissioning and Operation & Maintenance Manuals per project within 4 weeks of placements of Letter of Intent (LOI) or Purchase Order (PO) whichever is placed earlier containing complete general arrangement drawings, exploded views of internal assemblies and their Part Numbers Identified in the same drawing, catalogues of all Bought Out Items with used Model Nos. underlined etc. for approval of BHEL.

4.8.2.4 All final information, date and documentation for obtaining construction like supports, forces and moments transmitted by them to foundation, overall equipment location, Swing Door sweep dimensions, cable entry dimensional locations into equipment etc. and for obtaining operating permits by BHEL / BHEL's Customer and also for Civil Construction Planning within 4 weeks of LOI or PO whichever is placed earlier.

4.8.3 20-sets of Preservation, Erection, Operation and Maintenance Manual for each project presenting complete instructions for the damper with spare parts lists shall be included part of scope.

4.8.4 Vendor shall submit the List of Deliverables for Dispatch of the consignment for BHEL Approval.

5.0 QUALITY ASSURANCE PROVISIONS AND INSPECTION

5.1 The supplier shall submit his **QUALITY ASSURANCE PLAN** along with the proposal. BHEL and / or BHEL's customer will review the same and may put "HOLD" points for stage and / or final inspection. The comments / changes marked by BHEL shall be incorporated and submitted again after successful bid along with documents called in clause 4.8.

Access to the supplier's works shall be allowed for BHEL and / or the BHEL's Customer Representative to witness Tests and Inspections as agreed when the quality assurance plan is submitted, with the following as a minimum.

a) Intimation of readiness & date to conduct PERFORMANCE test shall be sent to inspection authority (BHEL / BHEL's Customer) so as to reach BHEL at least 10 days in advance.

b) Visual Inspection

c) Material Test

d) Mockup Assembly

e) Functional test – like opening / closing, seal tightness, efficency etc., (Also read clause 4.2 for more details).

5.2 Vendor shall submit the following Test CERTIFICATES and O&M MANUALS along with the unit for inspection.

- Material test – certificate of all the critical components which are coming into contact / region of hot-gases. This test certificates shall include both physical & chemical properties. 1 copy of preservation, erection, installation and O&M Instruction manuals, erection, drawings shall be submitted to BHEL/Customer Inspector for review of relevance and sufficiency of its contents.
- Test-Certifications as per 5.1.C. above.
- Test-Certificate of items covered under clause 4.1.14 (Third party Certification).
- All electrical and instrumentation items shall have PESO(CCOE) certification.

5.3 **FIELD TESTS:**

5.3.1 Test and inspections will be performed in the field by BHEL and / or BHEL's customer under the direction of the manufacturers Technical Advisor / Technically Trained Personnel as follows:

- Visual inspection
- Review of record of erection, installation and commissioning checks (See clause 4.7.2.16)
- Performance test (see clause 4.2.2)
- Others, if required.

5.3.2 Final acceptance of the unit will be declared at site by BHEL and / or BHEL's customer only after

satisfactory testing & guaranteed performance of the unit at site.

5.4 **GUARANTEE:**

5.4.1 Nothing in this specification shall be constructed to relieve the vendor of his responsibility for his compliance with all the applicable codes of construction & regulations for this unit.

5.4.2 Vendor shall **FURNISH A WARRANTEE** for the complete unit with its performance & trouble free operation for a period of 24 months from the date of dispatch OR 18 months from the date of commissioning whichever is earlier.

6.0 PREPARATION FOR DELIVERY

6.1 **PRESERVATION**

Preservation shall be accomplished in accordance with BHEL specification HY0490563 and acceptable commercial practice (for foreign shipments) unless otherwise indicated on the purchase order or quotation request.

6.2 **PACKING**

Vendor shall submit the shipping plan with Packing Drawings for all the Deliverables. Packing and shipment shall be as per the BHEL Spec GT14024.

Packing shall be accomplished in accordance with acceptable seaworthy packing (when applicable) & commercial practices (for foreign shipments) unless otherwise indicated on the BHEL purchase order or quotation request. All items shall reach site in undamaged conditions.

The supplier shall make shipment using the minimum number of shipping containers consistent with the requirements of safe transit, available modes of transportation and routing. It shall be the suppliers responsibility to determine that package as done in adequate to assure that all equipments shall arrive at destination in an undamaged condition and ready for the intended use.

When more than one shipping container is required, the supplier shall provide suitable relative container markings for recognition of parts of each complete unit. Assembly instructions shall be included with each such shipment.

6.3 **MARKING**

All shipping containers shall be identified with the customer Order Number, BHEL's purchase Order No., Gas Turbine Serial Number (Where specified to the suppliers in PO), General Arrangement drawing Number, BHEL Material Code, Suppliers Packaging List and Shipping Numbers. Each shipping containers shall contain two packing lists, listing all contents of the particular container with one copy attached in a secured manner to the out side. Each part kept inside the packing shall be marked as per packing list by black or aluminium paint or aluminium sheet tagged with above markings for easy identification, verified and signed by Supplier's Inspection/Quality Control Department on the packaging list.

6.4 **SHIPMENT**

As per instructions from BHEL's purchase Department for

I. Shipment of damper, blower, valves, piping, control instrumentation cables and their accessories and 13 copies of (BHEL approved) Preservation, Erection, Installation, Commissioning and Operation and Maintenanace Manual to site under intimation to purchaser.

II. 3 copies test certificates, inspection reports and 7 copies of (BHEL approved) Preservation, Erection, Installation, Commissioning and Operation and Maintenance Manual and soft copy of O&M Manual in CD (2 No's) to purchase department, BHEL Hyderabad.

6.5 **DESPATCH SCHEDULE**

The dispatch of damper shall be done as per the following suggested packing schedule for may be reduced in number by combining 2 or more into one packing.

The same shall be confirmed with size and weight of each packing by submitting the DESPATCH SCHEDULE along with other document for approval.

COPYRIGHT AND CONFIDENTIAL
The information on this document is the property of BHARAT HEAVY ELECTRICALS LIMITED.
It must not be used directly or indirectly in any way detrimental to the interest of the company.

COPYRIGHT AND CONFIDENTIAL
The information on this document is the property of BHARAT HEAVY ELECTRICALS LIMITED.
It must not be used directly or indirectly in any way detrimental to the interest of the company.

1. DAMPER MAIN UNIT WITHOUT DRIVE UNIT
2. DAMPER DRIVE UNIT (GEARBOXES + ACTUATORS ETC.)
3. DRIVE SHAFT ASSEMBLY IF SENT LOOSE.
4. SUPPORT STRUCTURES.
5. SEAL AIR BLOWER / FAN + SKID + MOTORS + SUCTION STRAINER ETC.
6. SEAL AIR PIPING + VALVES WITH ACTUATORS.
7. GAUGES + INSTRUMENTS + LIMIT SWITCHES WITH OPERATING LEVER SPARES.
8. ERECTION & COMMISSIONING SPARES.
9. 2 YEAR MAINTENANCE SPARES IF ORDERED.
10. CONTROL PANELS.
11. JUNCTION BOXES + ALL CABLES.
12. PRESERVATION, ERECTION, INSTALLATION, OPERATION AND COMMISSIONING MANUALS.

7.0 NOTES

In order to comply with the intent and spirit of this specificaion, an item not specifically referred to, but considered to be necessary to the fulfillment of the requirements of this specification shall be included in the supplier's quotation and so noted.

In the evenet of conflict between this specification and associated ordering drawing, outline or reference drawings or referenced specifications and standards, the suppliers shall advise the purchaser immediately upon the recognition of such conflicts so that corrective action may be taken.

7.1 EXCEPTIONS

The supplier shall submit a list of exceptions taken to this specification, or referenced specifications and standards, in preparation of the proposal (otherwise it shall be understood that the supplier has fully complied with the intent of this specification or referenced specificaitons and standards).

7.2 ELIGIBILITY OF VENDOR

Vendor should have supplied similar type & size of damper subjected to similar operating conditions like temperature and flow. They should have logged in at least 2 years of successful operation.

The vendor shall manufacture and supply the equipment as per the proven design and from its authorized manufacturing facilities where similar manufacturing was done previously. List of manufcaturing facilities shall be furnished for BHEL's end customer and / or consultalnt's approval.

TABLE-I

8.0 DAMPER SIZES FOR STANDARD GT FRAMES:

Frame Size	Inlet Size Flow Path (MM)	Outlet Size Flow Path (MM)	ByPAss Size Flow Path (MM)	Typical Flow (kg/hr)	Normal Flow (KG/HR)	Operating Pressure (MM WC)
3	2000x2000	2000x2000	2000x2000	197656	173180	380
5	3048x3048	3048x2500	3048x2500	476690	417670	380
6	3048x3048	3048x3048	3048x3048	624690	445284	380
9	5600x5600	5600x5600	5600x5600	1600000	1504800	380
9FA	6400x6400 Or 6500x6500	6400x6400 Or 6500x6500	6400x6400 Or 6500x6500	2438200	2132400	406

COPYRIGHT AND CONFIDENTIAL
The information on this document is the property of BHARAT HEAVY ELECTRICALS LIMITED.
It must not be used directly or indirectly in any way detrimental to the interest of the company.

TABLE-II

9.0 VARIANT TABLE:

VAR NO	GT Frame Size	Site / Project	Design Conditions	Max. Ex. Flow / Ex. Gas Temp.	BHEL Material Code & Remarks
01	Fr-5	IOC, Mathura	Max. Temp: 46.6°C Min. Temp: 0.7°C RH: 80%-100% Seismic: Zone-IV IS1893 Wind: 168KMPH Outdoor Altitude: 237m above MSL	521000 kgs/hr or 1229644 m^3/hr / 600°C	**GT9754277010** - Vendor to quote for dampers with local push button station and JB's (without control system). - Interface & Foundation as per BHEL Drg. No. 2-365-02-51001 - All Actuators (main drive & valves) with integral starters. - Internally insulated Ex-proof electricals (Ex-d) - All Electricals/Instrumentation shall be Explosion proof (Ex-d) Zone-1 Gas Group IIa, IIB & Temperature class T3 as per IS/IEC60079. - All Electricals / Instrumentation equipment JB's PB Station shall have CCOE/PESO approvals for Explosion proof (Ex-d) applicant. - Differential Pressure Transmitters are applicable for Seal Air fan changeover application.
02	Fr-6	ARKAY/ IOC PANIPAT REGENCY	Max. Temp: 46.6°C Min. Temp: 0.7°C RH: 80%-100% Seismic: Zone-IV IS1893 Wind: 168KMPH Outdoor Altitude: 237m above MSL	624690 kgs/hr / 615°C Design Pressure 650mm WG	**GT9754277028** - Vendor to quote for damper with local push button station and JB's (without control system). - All Actuators (main drive & valves) with integral starters. - Internally insulated - Explosion proof (Ex-d) electricals. - Interface & Foundation as per BHEL Drg. No. 2-365-02-61001
03	Fr-6	RIL, HAZIRA RIL, JAMNAGAR	Max. Temp: 5°C Min. Temp: 45° RH: 60% - 100% Seismic: Zone-IV IS1893 Wind: 168KMPH Outdoor Altitude: 237m above MSL	624690 kgs/hr / 615°C Design Pressure 650mm WG	**GT9754277036** - Vendor to quote for damper with local PB station and JB's.(Control by DCS). - Smart IQ actuators for main drive and valves of make ROTORK. - Internally Insulated - Explosion proof (Ex-d) electricals. - Interface & Foundation as per BHEL Drg. No. 2-365-02-61001.

04	Fr-5	APCL, LAKWA	Max. Temp: 46.6°C Min. Temp: 0.7°C RH: 80%-100% Seismic: Zone-IV IS1893 Wind: 168KMPH Outdoor Altitude: 237m above MSL	521000 kgs/hr or 1229644 m^3/hr / 600°C	**GT9754277044** - Vendor to quote for dampers with local push button station and JB's (without control system). - All Actuators (main drive & valves) with integral starters. - Non Explosion Proof Electricals. - Internally insulated - Interface & Foundation as per BHEL Drg. No. 2-365-02-51001
05	FR-9FA	BAWANA	Max. Temp: 47.2°C Min. Temp: 0.0°C Design RH: 60% Max. RH: 80% Min RH: 21% Seismic: Zone-IV IS1893 Wind: 168KMPH Outdoor Altitude: 237m above MSL	2307600 kgs/hr @ 602°C	**GT9754277052** - Vendor to quote for damper with local push button station and JB's (without control system). - All Actuators (main drive & valves) with integral starters. - Weather proof electrical systems-IP66 - Internally insulated - Interface & Foundation as per BHEL Drg. No. 2-365-02-81004
06	Fr-5	MSIL Gurgaon Retrofit Job. (Fr-6 Size) Damper	Special Requirement	Electrical cum control panel only. *Not complete Damper *	**GT9754277060** - This is to match Maruti Retrofit job (GT9754277028 GA Drg. Approved of M/s Bachmann Dated: 04/12/10) Ref. Drg.: Block Diagram. Drg. No. ECCP-MSIL-GD-01

COPYRIGHT AND CONFIDENTIAL
The information on this document is the property of BHARAT HEAVY ELECTRICALS LIMITED.
It must not be used directly or indirectly in any way detrimental to the interest of the company.

COPYRIGHT AND CONFIDENTIAL
The information on this document is the property of BHARAT HEAVY ELECTRICALS LIMITED.
It must not be used directly or indirectly in any way detrimental to the interest of the company.

07	Fr-6	BPCL Kochi	Max. Temp: 45°C Min. Temp: 5° RH: 60% - 100% Seismic: Zone-IV IS1893 Wind: 168KMPH Outdoor Altitude: 237m above MSL	624690 kgs/hr / 615°C Design Pressure 650mm WG	**GT9754277079** - Vendor to quote for - Damper with local PB station. - External limit switches – 14 mo. (7 for open and 7 for close) - Damper seal pressure shall be moinitored by Foundation Field(FF) complaint Diff. Pressure transmitters. - All electrical / instrumentation shall be explosion proof Ex-d Zone-1 Gas grp IIA, IIB & Temp Class T3 as per IS/IEC 60079. - All electrical/ instr. equipment JB's PB station shall have CCOE/PESC approvals to explosion proof (Ex-d) application and shall be submitted. - All actuators, Pr. Transmitters, JBs (SPUR JB) shall be Foundation Field Bus Compliant. - Field Bus cables from all instruments, Actuators upto SPUR JB shall be considered. - Interface & Foundation as per BHEL Drg. No. 2-365-02-61001. Vendor shall submit the Optional Quote for the Spare Items listed in Annexure - III.
08	Fr-6	ONGC Hazira	Max. Temp: 45°C Min. Temp: 4.5° RH: 70% - 18% Seismic: Zone-IV IS1893 Wind: 168KMPH Outdoor Altitude: 237m above MSL	624690 kgs/hr / 615°C Design Pressure 650mm WG	**GT9754277087** - Interface & Foundation as per BHEL Drg. No. 2-365-02-61001. - Electrical motor operated actuators shall have non-integral starters. - Internally insulated. - Explosion proof (ex-d) electricals. - Limit Switches Make: M/s Honeywell / M/s BETTIS - Actuator for main drive and valves of make ROTORK. - Vendor shall follow the customer suggested. 1. Sub-Vendor List – Electrical, C&I Items 2. Sub-Vendor List – Mechanical Items

09	Fr-6	RFCL Ramagundam	Max. Temp: 45°C Min. Temp: 5° RH: 60% - 100% Seismic: Zone-IV IS1893 Wind: 168KMPH Outdoor Altitude: 237m above MSL	624690 kgs/hr / 615°C Design Pressure 650mm WG	**GT9754277095** - Interface & Foundation as per BHEL Drg. No. 2-365-02-61001. - All the actuators shall be explosion proof (Ex. And with integeral starter type) - All electrical and instrument items shall be suitable to hazardous area clasification: Zone-1 Group IIA, IIB Temp. Class T3. - All electrical and instrument items shall be Ex. D type and approved by PESO(CCOE). - Differential Pr. Transimitters are applicable for seal air fan changover application.
10	Fr-3	GAIL Vijaypur	Max. Temp: 45°C Min. Temp: 5° RH: 60% - 100% Seismic: Zone-II IS1893 Wind: 168KMPH Outdoor Altitude: 448m above MSL	180000 kgs/hr / 540°C Design Pressure 650mm WG	**GT9754277109** - Interface & Foundation as per BHEL Drg. No. 2-365-02-61001. - All the actuators shall be explosion proof (Ex. And with integeral starter type) - All electrical and instrument items shall be suitable to hazardous area clasification: Zone-1 Group IIA, IIB Temp. Class T3. - All electrical and instrument items shall be Ex. D type and approved by PESO(CCOE). - Differential Pr. Transimitters are applicable for seal air fan changover application. - Transmitters shall be internationally safe Ex-I(S) suitable to Zone-1, IIC SMART with HART protocol (with local LCD)

*All the actuators shall be with integral starters.

COPYRIGHT AND CONFIDENTIAL
The information on this document is the property of BHARAT HEAVY ELECTRICALS LIMITED.
It must not be used directly or indirectly in any way detrimental to the interest of the company.

COPYRIGHT AND CONFIDENTIAL
The information on this document is the property of BHARAT HEAVY ELECTRICALS LIMITED.
It must not be used directly or indirectly in any way detrimental to the interest of the company.

VAR NO	Frame Size	Site / Project	Design Conditions	Max. Ex. Flow/ Ex. Gas Temp.	BHEL Material Code & Remarks
11	6B	DANGOTE PETROLEUM REFINERY AND PETRO-CHEMICALS FZE(DPRP), NIGERIA	**Max temp:** 33.7°C **RH**: 91% **Seismic Loads:** Equipment shall be designed for a net Seismic force Correspondence to Horizontal acceleration of 0.05g. Seismic forces shall be as per BS EN 1998 with seismic force coefficient a_{gr} as 0.05g ground acceleration. **Wind:** 200KMPH Outdoor	624690 Kgs/Hr /615 Deg C Design Pressure :650mm WG	**<u>GT9754277117 ELECTRIC OPER GUILOTINE DAMPER-FR6B</u>** a) Interface dimensions and foundation shall be as per BHEL Drawing No. 2-365-02-61001. b) Refer Spec GT55484 for Electrical, Control & Instrumentation requirements. c) All electrical and instrumentation item shall be Explosion Proof (Ex-d), Zone 1, Gas Group IIA & IIB, Temperature Class T3, conforming to IS/IEC 60079. d) Differential Pressure Transmitters (DPTs) shall be provided for the seal air fan changeover application. e) Containerization packing shall be followed for the Dangote Project in accordance with Clause 20 of GT14024. Three-layer packing and closed packing cases shall be provided in line with GT14024, prior to transportation through containers. f) Painting shall be as per the Annexure-IX g) Structural Steel shall be Grade S355JR quality Confirming to BS EN10025 or Equivalent specification and steel shall be of Yield Strength 355 N/ mm². Minimum grade of steels for insert plates, cover plates grating, chequered plates and steel structures in platforms shall be of grade S275JR. Confirming to BS EN10025. Properties of steel sections shall be as per follows: Rolled sections: BSI BS EN 10365 Hollow Sections: BS EN 10219 h) The Actuator shall be capable of controlled/soft closing to protect the Sealing surfaces from the sudden impact or excessive compression

IMPORTANT NOTE:
As the order is for 8 units, the supplier shall ensure that all the items belonging to one unit, including the main assembly, all associated loose items & spares, shall be delivered in a single consignment. Partial, incomplete, or staggered delivery of one-unit items or mixing of different unit items shall not be permitted.

Proper identification, packaging, and documentation shall be maintained in line with GT14024 to ensure traceability of all items belonging to one unit.

COPYRIGHT AND CONFIDENTIAL
The information on this document is the property of BHARAT HEAVY ELECTRICALS LIMITED.
It must not be used directly or indirectly in any way detrimental to the interest of the company.

(Choose any one UNIT: METRIC/ENGLISH)

ANNEXURE-I

TECHNICAL DATA TO BE FILLED IN BY SUPPLIER
(AND SUBMITTED ALONG WITH TECHNICAL OFFER)

Sl. No.	Description	
1	Manufacturer's Name	
2	Type	
3	Model No.	
4	Inside Dimensions (Length x Width X Face to Face Depth)	
5	Weight (including all Accessories etc.,)	
6	Number of Blades	
7	Blades Dimensions (Length x Width)	
8	Blades Thickness (Max / Min)	
8.1	Blade Insulation	
	Material	
	Density	
	Thickness	
9	Design Pressure (mm of WC)	
10	Design Temperature (°C)	
11	Design Gas Volume (Nm^3 / Hr)	
12	Damper Flow Area at 100% open	
13	Velocity Through Damper at Design Conditions(m/sec)	
14	Maximum Leakage through closed Damper at Design conditions (% of flow)	
15	Maximum Blade Deflections Closed Damper at Design Conditions(mm)	
16	Pressure Drop Through Open Damper at Design conditions (including Entrance & Exit Loss)-(mm WC)	
17	Materials of Construction Furnish	
	ASTM No. and Grade/Class or Equivalent:	
	Frame (In Contact with Gas Steam)	
	Frame (Out side Gas Steam)	
	Blade	
	Blade Drive Shaft	
	Seal	
	Actuator Support	
	Bearing Supports	
	Drive Rack	
	Linkages	
	Covers	
	Pipes	
	Insulation Material / Thickness	
	Seal Air Isolation Valve (Model)	
	Body	
	Disc	
	Stem	
	Seal Lining	

COPYRIGHT AND CONFIDENTIAL
The information on this document is the property of BHARAT HEAVY ELECTRICALS LIMITED.
It must not be used directly or indirectly in any way detrimental to the interest of the company.

18	Fabrication of damper-Briefly Describe methods of Assembly / Attachment used, especially Nothing Weather Bolted, Welded, Stress Relieved, Etc.	
a)	Frame	
b)	Blade	
19	Bearings	
	Type	
	Wear Surface Material	
	Manufacturer & Model Number	
	Lubrication Required? (Yes / No)	
	Lubricant Type	
	Qty. of lube oil per fill (Kg)	
20	Seals	
	Seal Material offered	
	Total Seal Contact Length	
	Leakage Area For Seal Air Capacity	
	Calculation at 76mm WC Differential Above Duct Pressure (Enclosed / Not)	
	Calculated Required Capacity (Nm^3 / Hr)	
21	Seal Air System	
	Fan Manufacturer	PATEL AIR FLOW/C.DOCTOR/AERO VENT/DRAFT AIR
	Fan Capacity (Nm^3 / Hr)(2 No's)	**Centrifugal**
	Isolation Valve Manufacturer (Seal air line) and Type	
	Gas Leakage through seal at Design Conditions with Fan shut off (Nm^3 / Hr)	
	Fan power required at design conditions (HP/KW)	
	Motor Manufacturer	LHP/CG/WEG/BBL
	Motor (HP/KW) chosen (2 No's)	ZONE-1 ,IIA ,IIB
	Fan Suction strainer (Drawing)	
	Fan construction-Spark proof (Provided/Not)	
	Fan characteristic Curve (Enclosed/Not)	
	Fan Catalogue (Enclose)	
	Fan Motor Data Sheet GTEG-021 (Enclose)	
	Seal Air Differential Pressure Transmitter	
	Seal Air Piping	SS304L /SS321
	Material	SS304L /SS321
	Size	
	Exp. Bellow	SS304L/SS321 Flanged ends

COPYRIGHT AND CONFIDENTIAL
The information on this document is the property of BHARAT HEAVY ELECTRICALS LIMITED.
It must not be used directly or indirectly in any way detrimental to the interest of the company.

22	Actuator Data	**Main Drive**	**Seal Air Isola. Valve**	**Line Change Over Valve**
		(with integral starters)		
	Manufacturer (Auma/Rotark)			
	Type and Model Number			
	Mounting Position			
	Size and Horse Power Rating			
	Rated Volts / Phase / Hz			
	Starting Torque of Damper Actuator Available			
	Running Torque of Damper Drive Available			
	Stall Torque of damper drive available			
	Gear Ratio			
	Time to Open OR Close Damper (Sec)			
	Torque Spring Size or Type			
	Time Rating (Min)			
	Gearing (Locking or Non-Locking)			
	Rated Speed (RPM)			
	Motor Starting Voltage (% of rated)			
	Full Load Current (Amps)			
	Temperature Rise limited to Class-B (Provided / Not)			
	Insulation Class-F (Provided / Not) Successive Starting Limitation (Cycles / hour)			
	Enclosure Type			
	Motor Space Heater Volts / Phase. Watts			
	Inbuilt Overload protection			
	Open & Close Interlock contacts			
23	Limit Switches Total Nos. Provided No. of NO/NC contacts in each manufacturer			
	Manufacturer's Model No.			
	Voltage Rating (V) AC/DC			
	Inductive Current Rating at 125 V DC			
	Make (A)			
	Break (A)			
	Carry (A)			
	Contacts Separation (mm)			
24	Torque Switches manufacturer			
	Manufacturer's Model No.			
	Voltage Rating (V) AC/DC			
	Inductive Current Rating at 125 V DC			
	Make (A)			
	Break (A)			
	Carry (A)			
	Contacts Separation (mm)			

COPYRIGHT AND CONFIDENTIAL
The information on this document is the property of BHARAT HEAVY ELECTRICALS LIMITED.
It must not be used directly or indirectly in any way detrimental to the interest of the company.

25	Worm Gear Box Catalogue enclosed / Not	
	Make	
	Model No.	
	Gear Ration	
	Mechanical Advantage	
	Out put / Input Torque	**Kg.m**
	Input RPM	
26	Secondary Reduction Gear Box (Enclose Catalogue)	
	Make	
	Model No.	
	Gear Ration	
	Mechanical Advantage	
	Out put / Input Torque	**Kg.m**
	Input RPM	
27	Position Indicator Potentiometer internal to actuator resistance (ohms)	
	Power Rating (Watts)	
28	List of Commissioning spares (part of main offer & supply) (Indicate the List)	
29	List of maintenance spares for 2 years (Separate price to be Indicated) List to be furnished with offer (Indicate the List)	
30	Additional price for Control panel cabling (in conduit) for distance more than 20 meters (cl.3.1.2.4) (indicate)	**Per mts.**
31	Supervision cost no per diem basis for erection and commissioning of damper at site (Indicate)	**Per diem**
32	Estimated Field Man hours required as per sequence to prepare, erect, install and commission damper at site (Indicated/Not)	
33	Special tools offered for Damper Installation (Indicate the List)	
	Maintenance (Indicate the List)	
34	DP. Indicator: Seal Air DP Guage)	
35	Tube Fittings	**M/S Swagelok/ M/S Parker**
36	All JB's, Push Button Station	
37	Cable Glands: Double Compression Type Ex-Proof cable glands of make	
38	Seal Air Differential Pressure Transmitter	
	Quantity	**2 Nos.**
	Manufacturer/ Model / Type	
	Protection	**IP 65**

DECLARATION

As designer, manufacturer and supplier of dampers for Gas Turbine applications we declare that the specification GT54277 of BHEL is fully read and understood by us its correct spirit and we will execute the order in its totality.

Submitted By (Name):…….

(Vendor's Office Seal)

Signature: ……Date of Submission…….

Annexure-II
CHECK LIST FOR DOCUMENTS TO BE ENCLOSED WITH OFFER

(to be filled by vendor)

[Each Document shall be serially numbered.]

[Enter Serial No. of enclosures in theorder enclosed in square brackets]

[ ]	a)	General Arrangement drawing with all dimensions as called Specification.
[ ]	b)	Support Details
[ ]	c)	Foundation Grouting details in
[ ]	d)	Foundation drawing
[ ]	e)	Bill of materials – Mechanical systems
[ ]	f)	Electrical Scheme / Control Logic Diagram
[ ]	g)	Operating Write-up for above scheme
[ ]	h)	Electrical/ Hydraulic Control Panel
[ ]	i)	Cable Schedule
[ ]	J)	P & I Diagram
[ ]	k)	Bill of Materials – Electrical and C& I systems
[ ]	l)	List of Erection & commissioning spares
[ ]	m)	List of Capital Spares for 2 years
[ ]	n)	Product Quality Plan for BHEL's approval (Note: Xerox Copy not accepted)
[ ]	o)	Actuator / Motor Electrical, Mechanic Data Sheet for all Actuators / Motors
[ ]	p)	Maximum AC Load of total damper KVA/KW, 3-Phase and 1-Phase
[ ]	q)	Despatch schedule of total damper systems and accessories
[ ]	r)	Fully filled in Annexure-I
[ ]	s)	Insulation thickness Calculation as per ASTM-C680 or compliance to BHEL specification if mentioned
[ ]	t)	Seal Air Fan Capacity (Pressure, Qty, required Pressure Drops considered, Characteristic curves from sub vendor of fan for Power, Flow & Pressure Filled Motor data sheet GTEG-021)
[ ]	u)	Seal Air Fan Foundation Details (if mopunted off frame)
[ ]	v)	Comprehensive Bill of Material for the Total Damper system
[ ]	w)	Cost Break up of total Damper
[ ]	x)	Structural Calculations

(Vendor's Office Seal & Date)

COPYRIGHT AND CONFIDENTIAL
The information on this document is the property of BHARAT HEAVY ELECTRICALS LIMITED.
It must not be used directly or indirectly in any way detrimental to the interest of the company.

Annexure-III

Applicable only for VAR-06, BPCL KOCHI Project

SNO.	NAME OF THE MATERIAL	QTY.
01	Pressure and Position Transmitters	10% or Min 1 Number
02	Actuators of each type	Min. 1 Number of each type
03	Limit Switches	10%
04	Cables and JB's	10%
05	Cable Glands	1 Number
06	PB, Lamps & Control Switches	5%
07	MCB's	5%
08	Relays	5% or Min. 1 No. of each type.

COPYRIGHT AND CONFIDENTIAL
The information on this document is the property of BHARAT HEAVY ELECTRICALS LIMITED.
It must not be used directly or indirectly in any way detrimental to the interest of the company.

COPYRIGHT AND CONFIDENTIAL
The information on this document is the property of BHARAT HEAVY ELECTRICALS LIMITED.
It must not be used directly or indirectly in any way detrimental to the interest of the company.

ANNEXURE-IX
PAINTING SCHEDULE

Sl. No.	Description of Item	Surface	Surface Preparation & Pre-erection/Shop Primer	DFT (µ)	Primer		Intermediate		Finish Coat		Total DFT (µ)	Finish shade Per BIS 5 or RAL No	Table No. & Design Temp (° C)
					Paint	DFT (µ)	Paint	DFT (µ)	Paint	DFT (µ)			
1	Guillotine damper	Interior (under insulation)	SSPC-SP-10 (Near white metal); & 1 coat of Inert polymeric matrix @ 125 µ DFT/coat	125	-	-	-	-	1 coat of Inert polymeric matrix @ 125 µ DFT/coat	125	250	Grey (RAL 7035)	Table 11.0 (Sl. No 11.1.3) 206 to 450° C
		Exterior	SSPC-SP-10 (Near white metal); & 1 coat of Inorganic zinc silicate (zinc content mimimum 80%) @ 65-75 µ DFT/coat	65 to 75	1 coat of heat resistant silicone Aluminium @ 20 µ DFT/coat	20	-	-	1 coat of heat resistant silicone Aluminium @ 20 µ DFT/coat	20	105 to 115	Aluminium (RAL 9006)	Table 6.0 81 to 400° C
2	Support structure for Guillotine damper	Exterior	SSPC-SP-10 (Near white metal); & 1 coat of Inorganic zinc silicate (zinc content mimimum 80%) @ 65-75 µ DFT/coat	65 to 75	1 coat of Epoxy zinc phosphate primer @ 40 µ DFT/coat	40	2 coats of polyamide cured epoxy resin medium suitably pigmented with MIO @ 100 µ DFT/coat	200	1 coat of Acrylic Polyurethane @ 40 µ DFT/coat	40	345 to 355	British Airways Blue (RAL 5011)	Table 6.0 -16 to 80° C
3	Damper seal air fans	Exterior	SSPC-SP-10 (Near white metal); & 1 coat of Inorganic zinc silicate (zinc content mimimum 80%) @ 65-75 µ DFT/coat	65 to 75	1 coat of heat resistant silicone Aluminium @ 20 µ DFT/coat	20	-	-	1 coat of heat resistant silicone Aluminium @ 20 µ DFT/coat	20	105 to 115	Aluminium (RAL 9006)	Table 6.0 81 to 400° C

NOTES :

1) All the handrails on platforms and staircase shall be Hot Dip Galvanized with thickness as per ISO 1461. Surface preparation over galvanisation as per SSPC SP 16 & ISO 12944-4.
   Following painting shall be done for these items after galvanisation
   a) 1 coat of polyamide cured epoxy resin medium suitably pigmented with MIO @ 100 µ DFT/coat
   b) 1 coat of Acrylic Polyurethane @ 40 µ DFT/coat
   c) Finish shade Yellow (Fluorescent)
2) All the grating shall be hot dip galvanized with thickness as per ISO 1461.
3) Blast cleaned surface shall be coated with complete application of primer as soon as practicable but in no case later than 4 hours the same day.
4) Paint application, equipment details, thinner mixing ratio, application conditions, curing schedule, and other related requirements shall be in accordance with the paint manufacturer's recommendations and instructions.

PAINT SHALL BE SOURCED FROM THE FOLLOWING MANUFACTURERES

1. M/S JOTUN INDIA PVT. LTD.
2. M/S HEMPEL PAINTS (INDIA) PVT. LTD.
3. M/S CARBOLINE (INDIA) PRIVATE LIMITED
4. M/S SIGMA PAINTS SAUDI ARABIA LTD.

RECORD OF REVISIONS

Rev. No.	Date	Revision Details	Revised By	Approved By
00	01.07.03	First Made	GJC	BSN
01	29.07.04	VAR 01 Site conditions & remarks added. VAR 02 remarks modified.	GJC	BSN
02	01.10.04	VAR 03 added.	GJC	BSN
03	05.04.05	Integral starter for main drive actuator is added.	GJC	BSN
04	12.06.06	VAR 04 added.	GJC	BSN
05	03.07.07	Integral starter for all motors (main drive & valves)	GJC	BSN
06	15.05.09	VAR 05 added.	PRAMOD	BSN
07	01.02.11	VAR 06 ADDED.	PAWAR	BSN
08	01.05.11	Blade insulation requirements added.	PAWAR	BSN
09	23.04.12	Limit Switch nos modified and instrumentation make details added.	CHKK	BSN
10	19.07.13	VAR OR ADDED	CHKK	VSH
11	09.08.14	Commissioning Spares added. Welding and painting specs added.	CHKK	BSN
12	08.10.14	VAR 08 ADDED.	CHKK	VSH
13	30.05.15	SEAL AIR FANS EFFICIANCY REVISED	CHKK	AJH
14	24.03.17	VAR 09 ADDED	CHKK	AJH
15	08.06.18	VAR 10 ADDED	CHKK	AJH
16	09.07.18	ELECTRICAL & INSTR. DETAILS UPDATED VAR 01 REVISED.	CHKK	AJH
17	13.07.26	VAR 11 ADDED & RETYPED	RK	CHKK

COPYRIGHT AND CONFIDENTIAL
The information on this document is the property of BHARAT HEAVY ELECTRICALS LIMITED.
It must not be used directly or indirectly in any way detrimental to the interest of the company.

COPYRIGHT AND CONFIDENTIAL
The information on this document is the property of BHARAT HEAVY ELECTRICALS LIMITED.
It must not be used directly or indirectly in any way detrimental to the interest of the company.

ELECTRICAL, CONTROL & INSTRUMENTATION SPECIFICATION
GUILLOTINE DAMPER (GD) SYSTEM

INDEX

Section	Description
1.0	Scope
2.0	Applicable Standards
3.0	Design Conditions
4.0	Control Philosophy
5.0	Electrical Requirements
5.1	Electric Motors
5.2	Motor-Operated Actuators
5.3	Actuator Interface Requirements
5.4	Junction Boxes
5.5	Local Push Button Station (LPB)
5.6	FRP Weather Canopies
6.0	Instrumentation Requirements
6.1	General
6.2	Differential Pressure Transmitters
6.3	Differential Pressure Gauges
6.4	External Mechanical Limit Switches
6.5	Instrument Valves and Tubing
7.0	Power, Control and Instrument Cables
7.1	LV Power Cables
7.2	Control and Instrument Signal Cables
7.3	Cable Termination and Glands
7.4	Cable Routing and Support
8.0	Inspection and Routine Testing
9.0	Documentation
9.1	Documents with Technical Offer
9.2	Documents After Purchase Order
10.0	Guarantee
11.0	Nameplate Details
12.0	Factory Acceptance Test (FAT)
13.0	Component makes
14.0	Commissioning Spares
15.0	Identification and Documentation of Packages
16.0	Packing and Preservation
17.0	Vendor Responsibility
18.0	Record of Revisions

COPYRIGHT AND CONFIDENTIAL
The information on this document is the property of BHARAT HEAVY ELECTRICALS LIMITED.
It must not be used directly or indirectly in any way detrimental to the interest of the company.

1.0 SCOPE

This specification defines the minimum Electrical, Control and Instrumentation (EC&I) requirements for the complete **Guillotine Damper (GD) System** associated with the Gas Turbine Exhaust System.

The Vendor's scope shall include the complete supply of all Electrical, Control and Instrumentation equipment, materials, accessories, engineering, testing, calibration, documentation and commissioning support required for a complete, safe, reliable and operational GD system

The Vendor's scope shall include, but shall not be limited to:

- 88GD-1 – Main Guillotine Damper motor-operated actuator, including integral electric motor, gearbox, actuator control unit and accessories.
- 88GD-GV-1 – Guillotine Damper Gate Valve motor-operated actuator, including integral actuator and accessories.
- 88GD-BFV1 – Guillotine Damper Seal-Air Butterfly Valve motor-operated actuator, including integral actuator and accessories.
- 88GD-SAF-1 and 88GD-SAF-2 – Seal Air Fan motors, including all required electrical/control interfaces.
- Differential Pressure Transmitters.
- Differential Pressure Gauges.
- Independent external mechanical OPEN/CLOSE limit switches.
- Junction Boxes for power, control and signal circuits.
- Local Push Button Stations/Local Control Stations.
- Instrument isolation valves, manifolds, tubing and fittings.
- Power, control and instrumentation cables within the defined package battery limit.
- Cable glands and termination accessories.
- Cable trays/supports and wiring accessories.
- Mounting brackets and accessories.
- FRP weather canopies.
- Earthing and shielding accessories.
- Calibration, inspection and testing.
- All necessary accessories for integration with the Purchaser's GT Control System/DCS.
- All other items required for complete and satisfactory operation of the GD system.

The complete system shall be suitable for continuous outdoor refinery service, including vibration, high ambient temperature, humidity, dust and corrosive atmospheric conditions, and shall be compatible with the GT Control System.

2.0 APPLICABLE STANDARDS

Equipment and installation shall comply with the latest applicable editions of the following standards, together with applicable statutory requirements and project specifications:

- IEC 60034 – Rotating Electrical Machines.
- IEC 60079 series – Explosive Atmospheres.
- IEC 60529 – Degrees of Protection Provided by Enclosures.
- IEC 61000 series – Electromagnetic Compatibility.
- IEC 60204-1 – Safety of Machinery – Electrical Equipment.
- IEC 60364 – Low-Voltage Electrical Installations.

COPYRIGHT AND CONFIDENTIAL
The information on this document is the property of BHARAT HEAVY ELECTRICALS LIMITED.
It must not be used directly or indirectly in any way detrimental to the interest of the company.

- IEC 61508 – Functional Safety of Electrical/Electronic/Programmable Electronic Safety-Related Systems.
- IEC 61511 – Functional Safety – Safety Instrumented Systems.
- IEC 60331 – Circuit Integrity of Electric Cables.
- IEC 60332 – Tests on Electric and Optical Fibre Cables under Fire Conditions.
- IEC 60754 – Test on Gases Evolved during Combustion of Materials from Cables.
- IEC 61034 – Measurement of Smoke Density of Cables.
- ISO 5210/ISO 5211 – Actuator/Valve Interface, as applicable.
- ISO 12944 – Corrosion Protection of Steel Structures by Protective Paint Systems.

In case of conflict between applicable requirements, the **more stringent requirement shall apply**, subject to Purchaser's final decision.

3.0 DESIGN CONDITIONS

The complete EC&I package shall be designed for:

- Continuous outdoor installation.
- High vibration associated with gas turbine exhaust service.
- High ambient temperature.
- Dust-laden atmosphere.
- Relative humidity up to 95%.
- Corrosive refinery atmosphere.
- Applicable hazardous-area classification specified in the project documents.

All outdoor equipment shall have a minimum IP65 enclosure protection unless a higher rating is specified for the particular equipment.

All equipment shall be suitable for the specified ambient temperature, vibration, process conditions and hazardous-area classification.

4.0 CONTROL PHILOSOPHY

4.1 The GD system shall be designed and supplied in accordance with the approved P&I Diagram, I/O List, Logic Diagram and GD Operating Sequence.The GD shall be operable from:

- Local Mode – from the Local Push Button (LPB) Station.
- Remote Mode – from the Purchaser's GTG Control System.

4.2 Selection of Local/Remote operation shall be through a Local/Remote selector switch provided at the LPB. Local/Remote status shall be available to the GT Control System through hardwired feedback.

4.3 In Remote Mode, normal operating commands shall originate from the GTG Control System. In Local Mode, the GD shall be operable from the LPB.

4.4 Normal local operating commands shall be inhibited when Remote Mode is selected. Emergency shutdown functions shall remain effective irrespective of operating mode.

4.5 Separate hardwired potential-free commands shall be provided for OPEN and CLOSE operation. Where START/STOP commands are required by the actuator control philosophy, separate potential-free contacts shall

be provided. Combined START/STOP command logic shall not be accepted unless specifically approved by the Purchaser.

4.6 Loss of control power shall not result in unintended GD movement. Unless otherwise specified in the approved Control Philosophy, the actuator shall remain in its last position on loss of power.

4.7 All control, protection, interlocking, indication and safety-related functions shall be implemented through the specified hardwired interfaces. HART communication, where applicable, shall be used only for configuration, diagnostics and maintenance.

4.8 **GD OPERATING SEQUENCE**

- The Guillotine Damper system shall operate in accordance with the selected plant operating mode.
- The 88GD-1 main Guillotine Damper actuator shall position the damper to the required OPEN/CLOSE position.
- When the damper reaches the CLOSE-to-HRSG position, the applicable CLOSE limit-switch feedback shall initiate the Gate Valve/Seal Air sequence.
- The 88GD-GV-1 Gate Valve actuator shall open to permit sealing air flow.
- The Gate Valve OPEN/CLOSE feedback shall be used in the subsequent Seal Air Fan sequencing as defined in the approved logic diagram.
- The 88GD-SAF-1/2 fans shall operate on lead/lag philosophy.
- Upon satisfactory running feedback of the selected Seal Air Fan, the 88GD-BFV1 Butterfly Valve actuator shall position the butterfly valve towards the selected operating fan to establish the required seal-air flow path.

  However, the detailed sequencing of **88GD-GV-1, 88GD-SAF-1/2 and 88GD-BFV1** shall be based on the approved GD P&ID and Logic Diagram. The sequence shall define the required permissives and feedbacks for damper closure, gate-valve opening, seal-air fan selection/running confirmation and butterfly-valve positioning.

5.0 ELECTRICAL REQUIREMENTS

5.1 ELECTRIC MOTORS:

5.1.1 Electric motors used for the GD system, including Seal Air Fan motors, shall be LV squirrel-cage induction motors of proven design and suitable for continuous outdoor gas turbine service.

5.1.2 Motors shall comply with the latest applicable IEC standards and statutory requirements and shall be IE3 minimum, S1 continuous duty. Motors shall be suitable for the specified rated voltage/frequency and voltage variation of ±6% and frequency variation of ±3%, individually or in combination.

5.1.3 Motors shall be capable of satisfactory starting and operation at the specified minimum terminal voltage. Starting current shall be within the limits permitted by the applicable IEC standard and shall be suitable for the Purchaser's electrical system. For actuator-integral motors, starting characteristics shall be in accordance with the actuator manufacturer's certified design.

5.1.4 For standalone motors, minimum locked-rotor thermal withstand shall be 10 seconds cold and 8 seconds hot, unless otherwise required by the applicable motor design. For integral actuator motors, the manufacturer's certified thermal/duty characteristics shall be demonstrated to be adequate for the specified GD operating cycle.

5.1.5 Motor insulation shall be Class F, with temperature rise limited to Class B. Windings shall be tropicalised and suitably protected for humid and corrosive outdoor service.

COPYRIGHT AND CONFIDENTIAL
The information on this document is the property of BHARAT HEAVY ELECTRICALS LIMITED.
It must not be used directly or indirectly in any way detrimental to the interest of the company.

COPYRIGHT AND CONFIDENTIAL
The information on this document is the property of BHARAT HEAVY ELECTRICALS LIMITED.
It must not be used directly or indirectly in any way detrimental to the interest of the company.

5.1.6 Motors shall have minimum IP65 enclosure protection, corrosion-resistant/protected construction and suitable cooling arrangement for outdoor service.

5.1.7 Each outdoor motor shall be provided with a UV-resistant FRP weather canopy in accordance with Section 5.6, unless installed under a permanent weather-protected shelter. The canopy shall not obstruct ventilation, cooling, inspection or maintenance.

5.1.8 Motor bearings shall have a minimum L10 life of 40,000 hours at rated operating conditions.

5.1.9 Motors shall be provided with:

- 240 V anti-condensation heater.
- Two suitable earthing terminals.
- Lifting arrangement where applicable.
- Permanently engraved nameplate/tag plate.
- Suitable terminal box with adequate cable termination space.
- Cable glands and terminals as specified.

5.1.10 Equipment installed in hazardous areas shall be certified for the actual hazardous-area classification specified in the project hazardous-area classification drawings. Where applicable, equipment shall be suitable for Zone 1, Gas Group IIA, IIB, Temperature Class T3 or more stringent classification, with valid IECEx/ATEX/PESO or applicable statutory certification.

5.1.11 Motor torque, starting characteristics, thermal capacity and speed/torque characteristics shall be suitable for the complete GD actuator/damper operating duty.

5.1.12 The motor and actuator manufacturers shall coordinate to ensure proper motor sizing, starting torque, thermal capacity, electrical compatibility and mechanical compatibility.

5.1.13 Motors shall be inspected and tested in accordance with the approved ITP. Relevant routine/type test certificates, datasheets, hazardous-area certificates and test records shall be submitted.

5.1.14 The Vendor shall submit motor datasheets and GA drawings indicating motor dimensions, mounting arrangement, terminal box, terminal details, cable entry and gland details, together with the electrical load list, for Purchaser review and approval prior to manufacture.

5.2 MOTOR OPERATED ACTUATORS (88GD-1, 88GD-GV-1 and 88GD-BFV1)

5.2.1 Each Guillotine Damper actuator shall be an intelligent electric actuator with integral control electronics, local control facilities, position indication, diagnostic functions and non-intrusive configuration facilities. The exact control architecture shall be manufacturer's standard for the offered AUMA/Rotork actuator. However, all mandatory OPEN/CLOSE commands, limit indications, torque/overload indications, healthy/fault status and other specified interfaces shall be available through hardwired potential-free contacts

5.2.2 Actuators shall be suitable for 415 V AC, 3-phase, 50 Hz motor supply. Control, command and feedback interfaces shall be suitable for **125 V DC hardwired interfacing with the GT Control System/DCS. The required 125 V DC remote-control interface, including OPEN, CLOSE, ESD and interlock inputs where applicable, shall be factory-selected/configured and included in the actuator purchase order. Vendor shall confirm compatibility and submit the manufacturer's wiring diagram and interface data with the offer.**

5.2.3 The actuator shall be suitable specifically for **Guillotine Damper service** and shall be selected based on the actual required operating torque/thrust, stroke/travel, operating speed, operating time and duty cycle.

COPYRIGHT AND CONFIDENTIAL
The information on this document is the property of BHARAT HEAVY ELECTRICALS LIMITED.
It must not be used directly or indirectly in any way detrimental to the interest of the company.

5.2.4 The actuator shall be suitable for OPEN/CLOSE duty with inching/jogging capability, as required by the approved GD operating philosophy. The actuator shall include, as a minimum:

1. Integral electric motor.
2. Reduction gearbox/drive mechanism.
3. OPEN and CLOSE limit switches.
4. OPEN and CLOSE torque/overload protection.
5. Manual handwheel.
6. Manual override/declutching arrangement.
7. Motor thermal protection.
8. Anti-condensation heater.
9. Local OPEN/CLOSE controls.
10. Local position indication.
11. Suitable terminal compartment.
12. Integral starter/control arrangement or actuator control unit.
13. Necessary mounting/adaptor/coupling hardware.

5.2.5 The actuator shall be provided with independent and adjustable **OPEN/CLOSE travel limit protection** and **OPEN/CLOSE torque/overload protection**.

5.2.6 Actuators shall be suitable for continuous outdoor hazardous-area service with minimum IP65 protection and shall be certified for **Zone-1, Gas Group-IIA, IIB and Temperature class T3 in accordance with IEC 60079 requirements**. Ex certification shall comply with valid IECEx/ATEX/PESO or applicable statutory approval shall be provided.

5.2.7 The actuator shall be suitable for continuous outdoor installation in the specified GT exhaust environment, including high temperature, vibration, dust, humidity and corrosive atmosphere.

5.2.8 All configurable parameters, including travel limits, torque settings, operating mode and control logic, shall be stored in non-volatile memory and shall not require battery backup.

5.2.9 Actuators shall be factory assembled, configured, calibrated and routine tested prior to dispatch.

5.2.10. Vendor shall submit actuator sizing calculation covering breakaway/unseating torque, running torque, seating torque, maximum operating torque/thrust, travel/stroke, operating time, duty cycle, number of starts per hour, motor rating and gearbox selection. The calculation shall demonstrate a minimum 25% margin over the maximum calculated operating torque/thrust.

5.3 ACTUATOR INTERFACE REQUIREMENTS:

5.3.1 Each GD actuator shall accept separate potential-free OPEN and CLOSE commands for remote operation. Combined START/STOP, toggle or pulse command logic shall not be used unless specifically approved by the Purchaser. The actuator interface shall be compatible with **125 V DC hardwired control signals** from the GT Control System/DCS. Suitable interposing relays shall be provided where required by the actuator manufacturer.

5.3.2 As a minimum, the following potential-free status signals shall be provided to the GT Control System:

- OPEN Limit.
- CLOSE Limit.
- Ready/Healthy.
- Local/Remote Status.
- Fault/Trip.
- Torque Trip.
- Motor Running, where applicable.

COPYRIGHT AND CONFIDENTIAL
The information on this document is the property of BHARAT HEAVY ELECTRICALS LIMITED.
It must not be used directly or indirectly in any way detrimental to the interest of the company.

5.3.3 Each GD shall be provided with twelve (12) independent external mechanical limit switches, comprising six (6) OPEN and six (6) CLOSE switches. These shall be independent of the actuator's internal limit switches. **All external mechanical GD limit switches shall be SIL-2 certified**

5.3.4 Each actuator shall provide a minimum of six (6) spare configurable NO/NC potential-free auxiliary contacts after accommodating all specified functions.

5.3.5 All control, indication, alarm and feedback signals shall be terminated on the actuator terminal block or associated JB. Terminals shall be permanently identified and shall correspond with approved wiring and terminal schedules.

5.3.6 All digital input/output signals shall be voltage-free contacts unless otherwise specifically stated in the approved I/O List.

5.3.7 A dedicated ESD input shall be provided wherever required by the approved safety philosophy. ESD shall have priority over normal operating commands.

5.3.8 The actuator shall automatically stop on operation of the applicable torque protection or travel limit and shall permit local inching/jogging operation where required.

5.3.9 The Vendor shall submit actuator/motor datasheets, GA drawings, terminal/wiring details, cable entry/gland details, electrical load list and interface details for Purchaser review and approval prior to manufacture.

5.3.10 All actuator power/control terminals, glands, mounting hardware, weather canopy and accessories shall be supplied complete within the GD package battery limit.

5.4 JUNCTION BOXES

5.4.1 Separate Junction Boxes shall be provided for Power, Control and Signal/Instrumentation circuits. Power and Control/Signal wiring shall not be mixed in the same JB.

5.4.2 Junction Boxes shall be SS316/SS316L, as applicable, suitable for continuous outdoor hazardous-area service, with minimum IP65 protection and certification suitable for the actual project hazardous area.

5.4.3 Junction Boxes shall have bottom cable entry only, removable gland plates and suitable certified cable glands. Glands shall be nickel-plated brass, double-compression type for outdoor installations. Plastic cable glands shall not be accepted.

5.4.4 Junction Boxes shall have screwless DIN-rail-mounted terminal blocks with minimum 20% spare terminals, together with separate earth and insulated shield terminals.

5.4.5 Each JB shall include internal/external earthing terminals, permanently engraved SS316 nameplate, terminal markers/ferrules, removable gland plate, drain/breather plugs where applicable and SS316 external hardware.

5.4.6 Unused cable entries shall be provided with suitable certified blanking/stopping plugs. Cable entries shall be protected against moisture ingress.

5.4.7 Outdoor JBs shall be provided with FRP weather canopies in accordance with Section 5.6, unless installed under a permanent shelter.

5.4.8 JBs shall be adequately sized for termination, inspection and maintenance, with minimum internal clearances as follows:

- 50–60 mm between terminal strips and parallel sides for up to 50 terminals, plus 25 mm for each additional 25 terminals.

COPYRIGHT AND CONFIDENTIAL
The information on this document is the property of BHARAT HEAVY ELECTRICALS LIMITED.
It must not be used directly or indirectly in any way detrimental to the interest of the company.

- 100–120 mm between two terminal strips for up to 50 terminals, plus 25 mm for each additional 25 terminals.
- Minimum 100 mm clearance between terminal blocks and the top/bottom of the enclosure.

5.4.9 All terminals and wiring shall be permanently identified and shall correspond with approved JB schedules, wiring diagrams and terminal schedules.

5.4.10 The Vendor shall submit JB GA drawings, internal wiring diagrams, terminal layouts, cable entry/gland details and JB schedules for Purchaser review and approval prior to manufacture.

5.5 LOCAL PUSH BUTTON STATION (LPB):

5.5.1 Each GD shall be provided with a Local Push Button Station for local operation, commissioning and maintenance. The LPB shall be suitable for continuous outdoor hazardous-area service, minimum IP65, with Ex d construction and applicable certification.

5.5.2 The LPB shall be fabricated from SS316 and shall include, as a minimum:

- Local/Remote selector switch.
- GD external position Limit switch interlock
- OPEN push button.
- CLOSE push button.
- START and STOP push buttons, where required by the actuator control philosophy.
- Emergency STOP push button.
- OPEN indication lamp.
- CLOSED indication lamp.
- HEALTHY indication lamp.
- POWER ON indication lamp.
- Engraved device identification.

5.5.3 LPB supply shall be 240 V AC, 1-phase, 50 Hz. Suitable interposing relays/control transformers shall be provided wherever required for interface compatibility.

5.5.4 The LPB shall employ relay-based circuitry for local operation, indication and hardwired feedback/interface functions.

5.5.5 The Emergency STOP shall be mushroom-head, stay-put type with twist-to-release mechanism and positively guided contacts suitable for the applicable safety function.

5.5.6 LED indication lamps shall have minimum rated life of 100,000 hours.

5.5.7 LPB shall be complete with internal wiring, DIN-rail terminal blocks, relays, ferrules, internal/external earthing terminals, nickel-plated brass Ex d double-compression glands, bottom cable entry, SS316 engraved nameplate and all necessary accessories.

5.5.8 LPB shall have minimum 20% spare capacity for future expansion, including spare provisions for panel-mounted devices, alarm windows where applicable and cable entries. Spare cable entries shall be supplied with certified blanking plugs.

5.5.9 Each outdoor LPB shall be provided with an FRP weather canopy in accordance with Section 5.6, unless installed under a permanent weather-protected shelter.

COPYRIGHT AND CONFIDENTIAL
The information on this document is the property of BHARAT HEAVY ELECTRICALS LIMITED.
It must not be used directly or indirectly in any way detrimental to the interest of the company.

5.5.10 The Vendor shall submit LPB GA, schematic/internal wiring, terminal layout, cable entry/gland details, BOM and terminal schedule for Purchaser approval prior to manufacture. The LPB shall be factory wired and functionally tested.

5.5.11 Typical annexures included in this specification are for reference only. Final project-specific LPB drawings shall be submitted after PO placement for Purchaser approval.

5.6 FRP WEATHER CANOPIES (TO BE PROVIDED FOR INSTRUMENTS, ACTUATORS, LIMIT SWITCHES, LPB STATION, JBS & MOTORS)

5.6.1 Prefabricated FRP weather canopies, minimum 3 mm thickness, shall be provided for outdoor instruments, actuators, motors, external limit switches, LPB stations and Junction Boxes exposed to direct weather. Canopies shall not be required where equipment is installed under a permanent weather-protected shelter.

5.6.2 Canopies shall be light grey, UV-resistant, anti-static and weatherproof FRP, with high mechanical strength and suitable resistance to moisture, dust, corrosive atmosphere, acids, alkalis, vapours and fumes encountered in refinery service.

5.6.3 Canopies shall provide protection on the top and all four sides. For field electronic instruments/transmitters, the front shall include a transparent acrylic viewing window/door for display viewing.

5.6.4 Canopies shall be complete with SS304 mounting brackets/support plates, acrylic viewing window/door and suitable rubber grommets for cable/tubing entry, as applicable.

5.6.5 Canopy design shall permit adequate equipment ventilation, inspection, operation, calibration and maintenance and shall not interfere with cooling, cable termination or mechanical operation.

5.6.6 All FRP canopies and mounting accessories shall be suitable for long-term continuous outdoor refinery service.

6.0 INSTRUMENTATION REQUIREMENTS

6.1 GENERAL

6.1.1 All applicable electronic field instruments shall be SMART, microprocessor-based, two-wire type with 4–20 mA output and HART communication. HART shall be used only for configuration, diagnostics and calibration.

6.1.2 Foundation Fieldbus and other digital fieldbus-based instruments shall not be accepted unless specifically approved by the Purchaser.

6.1.3 Instruments shall have minimum IP65 protection and integral LCD display where applicable. Dual-compartment housing shall be provided where available for the selected instrument design and required by the approved datasheet.

6.1.4 E**xternal mechanical GD limit switches shall be SIL-2 capable/certified in accordance with IEC 61508, where applicable**

6.1.5 All hazardous-area instruments shall have valid IECEx/ATEX/PESO or applicable statutory certification for the actual installed area classification.

6.1.6 All instruments shall have permanently engraved SS316 nameplates in accordance with Section 11.

6.1.7 Outdoor instruments and associated manifolds shall be provided with FRP weather canopies in accordance with Section 5.6, unless installed under a permanent weather-protected shelter.

COPYRIGHT AND CONFIDENTIAL
The information on this document is the property of BHARAT HEAVY ELECTRICALS LIMITED.
It must not be used directly or indirectly in any way detrimental to the interest of the company.

6.2 DIFFERENTIAL PRESSURE TRANSMITTERS

6.2.1 Differential Pressure Transmitters shall be SMART, two-wire electronic type with 4–20 mA + HART, accuracy ±0.065% of calibrated span or better and stability ±0.2% of URL for a minimum of five years.

6.2.2 DP Transmitter body shall be SS316 minimum, with SS316L wetted parts and sensing element. Vent/drain components shall be compatible with the wetted parts and provided with suitable metallic plugs.

6.2.3 DP Transmitters shall be supplied complete with suitable 5-way manifolds, mounting brackets, process connections, impulse tubing/fittings and accessories required for complete installation. Process connection shall normally be ½" NPT(F).

6.2.4 DPTs shall withstand the specified static pressure and differential over-range in either direction without permanent damage, distortion or unacceptable calibration shift.

6.2.5 Transmitters shall be factory calibrated and supplied with traceable calibration certificates and relevant test certificates.

6.2.6 The Vendor shall submit datasheets, mounting/GA details, manifold details, process connection details, hazardous-area/SIL certificates and calibration records for approval.

6.3 DIFFERENTIAL PRESSURE (DP) GAUGES

6.3.1 Differential Pressure Gauges shall have 150 mm dial size, SS304 minimum weatherproof case, SS316 minimum wetted parts, shatterproof glass and minimum Accuracy Class 2.0, unless otherwise specified in the datasheet.

6.3.2 DP gauges shall be of double-diaphragm or bellows type. Single-diaphragm type DP gauges shall not be accepted.

6.3.3 DP gauges shall be provided with suitable over-range protection for full rated static pressure on either side, without permanent damage or calibration shift.

6.3.4 Each DP gauge shall be supplied with an integral 5-valve SS316 manifold, complete with isolation, equalizing and vent/drain facilities, suitable for the specified process pressure and service.

6.3.5 Process connections shall normally be ½" NPT(M) unless otherwise specified in the approved datasheet.

6.3.6 For pulsating/vibrating service, DP gauges shall be glycerine-filled and provided with suitable snubber/pulsation dampener where required.

6.3.7 DP gauges shall be provided with FRP weather canopy in accordance with Section 5.6, unless installed under a permanent weather-protected shelter.

6.3.8 The Vendor shall submit datasheets, mounting/GA details, 5 valve manifold details, process connection details, hazardous-area/ certificates and calibration records for approval.

6.4 EXTERNAL MECHANICAL LIMIT SWITCHES (WITH METALLIC ROLLER SUITABLE FOR HIGH TEMPERATURE)

6.4.1 Each GD shall be provided with independent external mechanical limit switches for reliable OPEN/CLOSE position indication, process interlocking and safety-related interface. Limit switches shall be heavy-duty industrial type, Honeywell or BHEL-approved equivalent.

6.4.2 Limit switches shall have a metallic roller/lever operating mechanism suitable for high temperature, vibration, dust, moisture and corrosive refinery service.

6.4.3 The operating mechanism shall be adjustable and shall provide positive and repeatable actuation only at the designated fully OPEN or fully CLOSED position.

COPYRIGHT AND CONFIDENTIAL
The information on this document is the property of BHARAT HEAVY ELECTRICALS LIMITED.
It must not be used directly or indirectly in any way detrimental to the interest of the company.

6.4.4 Each limit switch shall have minimum 2 NO + 2 NC potential-free contacts with contact rating suitable for 24–250 V AC/DC control circuits.

6.4.5 The enclosure shall have minimum IP65 protection and shall be suitable for the applicable hazardous area, with valid IECEx/ATEX/PESO or equivalent certification.

6.4.6 All external mechanical GD limit switches shall be SIL-2 certified in accordance with IEC 61508.

6.4.7 Each switch shall be supplied complete with suitable corrosion-resistant mounting bracket, metallic roller/lever assembly, cable gland and all installation accessories.

6.4.8 Each GD shall have a minimum of six (6) independent OPEN limit switches and six (6) independent CLOSE limit switches. Each switch shall operate only at its respective fully OPEN/CLOSED position and shall be electrically independent of actuator internal limit switches.

6.4.9 The Vendor shall submit limit-switch datasheets, make/model, contact arrangement, hazardous-area/SIL certificate, GA of mounting assembly and BOM for Purchaser approval.

6.4.10 Each outdoor limit-switch assembly shall be provided with an FRP weather canopy in accordance with Section 5.6 unless installed under a permanent shelter

---

6.5 INSTRUMENT HOOK UP, VALVES & IMPULSE TUBING

6.5.1 A neat and detailed instrument hook-up/assembly drawing showing the DPTs and DPGs, including individual 5-valve manifolds, tubing, fittings, supports and drain/vent arrangements, shall be submitted to BHEL for review and approval. The complete assembly shall be neatly mounted in a suitable instrument rack fabricated from minimum 3 mm thick CRCA sheet, complete with suitable FRP weather canopy, mounting hardware and all accessories required for safe operation, inspection and maintenance.

6.5.2 Process impulse tubing shall be seamless SS316L, ½" OD × 1.2 mm wall thickness, complete with SS316 double-compression fittings, supports, clamps and accessories.

6.5.3 All valves, tubing and fittings shall be suitable for the specified process pressure, temperature, fluid compatibility, outdoor refinery service and hazardous-area conditions.

6.5.4 Horizontal impulse tubing shall be routed with a minimum 1:12 slope, suitably arranged to avoid gas/liquid pockets and to facilitate draining/venting as applicable.

6.5.5 Tubing shall be properly supported and protected against vibration, mechanical damage and undue stress at instrument connections.

6.5.6 The Vendor shall supply all valves, tubing, fittings, supports, clamps, plugs and associated accessories required for complete and leak-tight installation within the battery limit.

6.5.7 Tube fittings shall be Swagelok, Parker or BHEL-approved equivalent.

7.0 POWER, CONTROL AND INSTRUMENT CABLES

7.1 LV POWER CABLES

7.1.1 LV power cables shall be heavy-duty 0.6/1.0 kV grade, stranded copper conductor, XLPE insulated, PVC inner-sheathed, armoured and overall FRLS PVC sheathed, complying with applicable IEC standards.

7.1.2 Minimum conductor size for LV power supply cables shall be 2.5 mm² copper, unless a higher size is required by load, voltage drop, short-circuit withstand, installation conditions or derating.

7.1.3 For GD actuator motors, the minimum cable size shall be:

Motor Rating	Minimum Power Cable
Up to and including 30 kW	10 mm² single-core, stranded copper, XLPE insulated, 1 kV grade

COPYRIGHT AND CONFIDENTIAL
The information on this document is the property of BHARAT HEAVY ELECTRICALS LIMITED.
It must not be used directly or indirectly in any way detrimental to the interest of the company.

7.1.4 Final cable sizing shall be confirmed by the Vendor based on motor full-load current, starting current, voltage drop, short-circuit withstand, installation method, ambient conditions and applicable derating factors.

7.1.5 Cable datasheet, Power cable schedule and Interconnection diagram documents to be submitted for our review and approval.

7.2 CONTROL AND INSTRUMENT SIGNAL CABLES

7.2.1 Control and instrument signal cables shall be stranded copper conductor, XLPE insulated, armoured and FRLS sheathed type.

7.2.2 Instrument signal cables shall be twisted pair, individually and overall shielded with Aluminium-Mylar tape and drain wire. Minimum conductor size shall be 1.5 mm² for single-pair/single-triad cables and 0.5 mm² for multipair cables, unless otherwise specified.

7.2.3 IS cables shall have blue/light-blue outer sheath and Non-IS cables shall have black outer sheath.

7.2.4 For multicore applications, 2P, 6P and 12-pair shall be used.

7.2.5 Multicore instrument/control cables shall include minimum 20% spare pairs/triads, unless otherwise approved.

7.2.6 Power, control and instrument/signal cables shall be properly segregated to minimize electromagnetic interference.

7.2.7 Cable datasheet, Control & cable schedule and Interconnection diagram documents to be submitted for our review and approval.

7.3 CABLE TERMINATION AND GLANDS

7.3.1 The Vendor shall supply and install all cables and termination accessories within the GD package battery limit.

7.3.2 All cables shall be glanded and terminated at both ends. No loose or unterminated cables shall be permitted. Spare cores/pairs/triads shall also be terminated, identified and insulated.

7.3.**3 Cable glands shall be nickel-plated brass, double-compression type, suitable for armoured cables and outdoor service, complete with earth tags, locknuts, PVC shrouds/protective hoods and accessories. All Flameproof glands shall have valid Exd certification.**

7.3.4 Cable glands shall maintain the required enclosure protection, minimum IP65 or higher where required by the connected equipment.

7.3.5 All cables shall terminate on suitable terminal blocks within Vendor-supplied equipment. Separate terminal blocks shall be provided for power and signal/control circuits.

7.3.6 Minimum terminal capacity shall be:

- Signal/Control cables: 1.5/2.5 mm².
- Power cables: 6 mm².

Where higher cable sizes are required, suitably rated terminals shall be provided.

7.4 CABLE ROUTING AND SUPPORT

7.4.1 Cables from field instruments to Junction Boxes and all branch cables within the GD package battery limit shall be in the Vendor's scope and shall be routed through FRP/perforated cable trays or suitable supports supplied by the Vendor.

7.4.2 Multicore cables from field Junction Boxes/local panels to the main cable interface within the Vendor's battery limit shall be routed through suitable perforated cable trays/support angles supplied by the Vendor.

COPYRIGHT AND CONFIDENTIAL
The information on this document is the property of BHARAT HEAVY ELECTRICALS LIMITED.
It must not be used directly or indirectly in any way detrimental to the interest of the company.

7.4.3 Cables routed in trays shall be adequately secured at regular intervals using suitable SS clamps/ties. Cable armour shall not be used for mechanical support. Cable tray fixing hardware shall be SS.

7.4.4 Cable trays shall be suitably sized and shall maintain a minimum 20% spare capacity. Adequate segregation shall be maintained between power, control and instrument/signal cables.

7.4.5 All cables shall be terminated on suitable terminal blocks within all Vendor-supplied equipment. Separate terminal blocks shall be provided for power and signal/control circuits.

7.4.6 Terminal blocks shall be suitable for the specified cable sizes and shall be provided with adequate spare capacity. Where higher cable sizes are required, suitably rated terminals shall be provided without modification or reduction of the specified conductor size.

8.0 INSPECTION AND ROUTINE TESTING (FOR ELECTRICAL, C&I SCOPE)

8.1 The Vendor shall carry out all inspection, routine, functional, calibration and acceptance tests in accordance with this specification, approved drawings/datasheets, applicable standards and the approved ITP.

8.2 Inspection and testing shall include, as applicable:

- Visual and dimensional inspection.
- Verification of ratings, materials, nameplates and workmanship.
- Hazardous-area/Ex, IP and statutory certification verification.
- MTC verification for applicable SS316/SS316L components.
- Insulation resistance and dielectric tests where applicable.
- Wiring continuity and point-to-point checks.
- Motor routine tests.
- Actuator OPEN/CLOSE operation.
- Travel and torque protection verification.
- Verification of all 12 independent external SIL-2 limit switches.
- LPB functional verification.
- JB terminal, gland, earthing and shielding checks.
- Verification of all specified digital/analog hardwired interfaces.
- ESD and interlock function verification.
- Cable termination and identification verification.

8.3 All instruments shall be calibrated using standards traceable to recognized national/international standards. Calibration certificates shall identify tag number, range, test points, actual readings and acceptance criteria.

8.4 The Vendor shall submit routine test certificates, calibration certificates, inspection reports, hazardous-area/Ex certificates, SIL certificates and material certificates, as applicable.

8.5 Inspection and testing shall be carried out in accordance with the approved ITP. BHEL/Purchaser/TPIA shall have the right to witness/review applicable inspection stages.

8.6 Any defect, failure or deviation identified during inspection/testing shall be rectified and the affected equipment/function shall be retested at no additional cost.

8.7 No dispatch shall take place until required inspections and tests are satisfactorily completed and applicable release/dispatch clearance is obtained.

COPYRIGHT AND CONFIDENTIAL
The information on this document is the property of BHARAT HEAVY ELECTRICALS LIMITED.
It must not be used directly or indirectly in any way detrimental to the interest of the company.

9.0 DOCUMENTATION

9.1 DOCUMENTS WITH TECHNICAL OFFER

The Vendor shall submit:

- Compliance/Deviation Statement.
- Preliminary GD EC&I GA drawing.
- Preliminary Instrument and Actuator Datasheets.
- Preliminary Electrical Datasheets.
- Preliminary P&ID and Control Philosophy.
- Preliminary I/O List and Interface List.
- Preliminary Cable Schedule.
- Preliminary JB Schedule.
- Preliminary LPB details.
- Preliminary BOM.
- Technical catalogues of Instrumentation items.

9.2 DOCUMENTS AFTER PURCHASE ORDER

9.2.1 Engineering Documents to be submitted for approval

1. Final P&ID and GA drawings, including complete BOM with make, model/type, MOC and quantity.
2. Instrument datasheets for PT, DPT, DP Gauge, External Limit Switches and other applicable instruments.
3. Final Actuator/Motor GA drawings and technical datasheets, including terminal, wiring and cable entry details.
4. Electrical Load List for motors, actuators, LPB and all other electrical equipment.
5. External Limit Switch mounting/assembly GA drawing with BOM.
6. GA drawing, Instrument Hook-up Drawings and impulse tubing drawing of Seal Air fans DPTs and DPGs with its 5 valve manifolds
7. GA drawings of Power JB, Control JB, Signal JB and LPB Station.
8. Internal wiring/schematic drawings, terminal layouts and cable entry details for Power JB, Control JB, Signal JB and LPB.
9. Final Cable Schedule and Cable Interconnection Diagram, covering all package and external interfaces.
10. Drive Control Philosophy/Operational Write-up.
11. Unit-wise nameplate schedule/details for the main equipment and all instruments/components mounted within the package.
12. BOM for Mandatory Spares, Commissioning Spares and Recommended O&M Spares, as applicable.
13. Packing List for all Electrical & C&I items, identifying package/box number, item description, tag/part number, quantity, MOC and package identification details.
14. FAT procedure to be submitted for approval

9.2.5 Quality/Test Documents

- ITP.
- FAT Procedure.
- FAT Report.
- Routine Test Certificates.
- Calibration Certificates of all Instruments.
- Hazardous-Area/Ex Certificates.
- SIL/Functional Safety Certificates for all instruments (DPT, Limit switches etc).

COPYRIGHT AND CONFIDENTIAL
The information on this document is the property of BHARAT HEAVY ELECTRICALS LIMITED.
It must not be used directly or indirectly in any way detrimental to the interest of the company.

- Material Test Certificates where applicable.

9.2.6 O&M and Spares

- O&M Manual.
- Installation/Commissioning/Maintenance Instructions.
- Recommended two-year operational spare list.
- Recommended special tools.

10.0 GUARANTEE

10.1 The Vendor shall guarantee the complete GD EC&I system for satisfactory, safe and reliable operation under all specified process, electrical, environmental and hazardous-area conditions.

10.2 The Vendor shall guarantee full functional compatibility and correct integration with the Purchaser's GE Mark VIe GTG Control System, including specified hardwired commands, feedbacks, analog signals, interlocks, alarms and safety-related interfaces.

10.3 All supplied equipment and accessories shall be guaranteed against defects arising from design, materials, manufacture, workmanship, calibration, configuration or performance during the applicable warranty period.

10.4 Any defect, failure or non-conformity identified during the warranty period shall be repaired, replaced or rectified by the Vendor at no additional cost, including necessary engineering, testing, commissioning and site support.

10.5 The Vendor shall guarantee the completeness and accuracy of submitted drawings, datasheets, calculations, manuals, calibration records, test certificates and other project documentation.

10.6 Any modification/replacement during the warranty period shall be fully tested and all affected documentation shall be updated.

10.7 The warranty period shall be as specified in the Purchase Order/Commercial Terms.

11.0 NAMEPLATE DETAILS

11.1 Each equipment and major component supplied under the GD package, including motors, actuators, instruments, limit switches, JBs and LPBs, shall have a permanently engraved and securely fixed nameplate.

11.2 The nameplate shall, as a minimum, indicate the Tag Number and equipment identification. Instrument nameplates shall additionally indicate applicable manufacturer/model, range, accuracy/class and process connection, as applicable.

11.3 Project Specific Nameplate details to be collected from BHEL after PO placement

11.4 For Ex/FLP equipment, a separate nameplate shall indicate, as applicable:

- Manufacturer/type.
- Protection concept.
- Hazardous-area classification.
- Gas group.
- Temperature class.
- Certification/testing agency.
- Certificate number and date.
- Statutory approval/license details.

COPYRIGHT AND CONFIDENTIAL
The information on this document is the property of BHARAT HEAVY ELECTRICALS LIMITED.
It must not be used directly or indirectly in any way detrimental to the interest of the company.

11.5 Nameplates shall be SS316 or other Purchaser-approved corrosion-resistant material, permanently engraved, legible and suitable for continuous outdoor refinery service. Final project-specific nameplate details shall be submitted by Vendor for BHEL approval after PO placement

11.6 All Tag Numbers shall be identical to the approved P&ID, datasheets, instrument index, I/O List, cable schedule and other project documents.

11.7 Typical Nameplate – Refer below:

MANUFACTURED BY	
PRODUCT	**GUILLOTINE DAMPER**
CUSTOMER	BHEL, HYDERABAD
PROJECT	**DPRP EXPANSION PROJECT (DEP), NIGERIA**
JOB REF. NO	
BHEL MTL CODE/PO	
SIZE	
DESIGN EXHAUST FLOW	
DESIGN TEMPERATURE	
DIFF. PRESSURE	
OPERATION	ELECTRICAL
OPEN / CLOSE TIME	

12.0 FACTORY ACCEPTANCE TEST (FAT)

12.1 The complete GD EC&I package shall undergo FAT at the Vendor's/manufacturer's works prior to dispatch.

12.2 The FAT shall include, as a minimum:

- Verification against approved drawings, datasheets and BOM.
- Verification of 125 VDC OPEN/CLOSE/ESD/interlock input functionality using the actual configured actuator interface
- Equipment rating and certification verification.
- Terminal and wiring verification.
- GD actuator OPEN/CLOSE operation.
- Local/Remote operation.
- E-STOP/ESD verification.
- Torque and travel protection.
- HART communication verification where applicable.
- PT/DPT functional/calibration verification.
- Functional verification of all 12 independent SIL-2 external limit switches.
- Verification of Ready/Healthy, Fault/Trip, Torque Trip, Local/Remote and other specified feedbacks.
- LPB functional verification.
- Simulation of all applicable hardwired signals to/from the GE Mark VIe GTG Control System.

COPYRIGHT AND CONFIDENTIAL
The information on this document is the property of BHARAT HEAVY ELECTRICALS LIMITED.
It must not be used directly or indirectly in any way detrimental to the interest of the company.

- Verification of all applicable alarms/interlocks/ESD functions.
- GD inching operation.
- OPEN/CLOSE cycle test, travel time and repeatability.
- Power failure/restoration test.
- Demonstration of retention of actuator configuration parameters after power loss.
- Complete package functional demonstration under simulated operating conditions.

12.3 During FAT, the Vendor shall simulate the Purchaser's Mark VIe interface and verify all applicable digital and analog I/O against the approved I/O List and ICD.

12.4 FAT shall be witnessed/reviewed by BHEL/Purchaser/TPIA in accordance with the approved ITP and Purchase Order requirements.

12.5 The Vendor shall submit:

- Approved FAT Procedure.
- Completed FAT Report.
- Actual I/O/interface test records.
- Calibration certificates.
- Actuator torque test/calibration records.
- Limit-switch test records.
- Inspection/test reports.
- Signed FAT acceptance/release report.

12.6 Any FAT failure/deviation shall be rectified and the affected function shall be retested. Approved FAT changes shall be incorporated in the final As-Built documentation.

12.7 No GD package shall be dispatched without successful FAT completion and applicable dispatch clearance.

13.0 COMPONENT MAKES:

Sl. No.	Equipment	Preferred Make
1	Intelligent Electric Actuator	AUMA / Rotork only
2	------	------
3	Differential Pressure Transmitter	Rosemount / Yokogawa / Honeywell / ABB
4	Tube Fittings	Swagelok / Parker
5	------	------
6	Differential Pressure Gauge	WIKA / Ashcroft / Baumer
7	External Mechanical Limit Switch	Honeywell / BHEL-approved equivalent
8	Explosion-Proof LPB	FCG / FEPL / Baliga
9	Junction Boxes	FCG / FEPL / Baliga
10	Cable Glands	FCG / FEPL / Baliga
11	Terminal Blocks	Phoenix Contact / Weidmüller / WAGO / Elmex
12	Earth/Shield Terminal Blocks	Phoenix Contact / Weidmüller / WAGO / Elmex
13	Control/Interposing Relays	Phoenix Contact / Finder / Omron / Schneider
14	Selector Switches	Schneider / Siemens / ABB / Allen-Bradley

COPYRIGHT AND CONFIDENTIAL
The information on this document is the property of BHARAT HEAVY ELECTRICALS LIMITED.
It must not be used directly or indirectly in any way detrimental to the interest of the company.

15	Push Buttons	Schneider / Siemens / ABB / Allen-Bradley
16	LED Indication Lamps	Schneider / Siemens / ABB / Allen-Bradley
17	MCB	Siemens / Schneider / ABB / Legrand
18	MCCB	Siemens / Schneider / ABB
19	Anti-Condensation Heater	Eltherm / Thermon / BHEL-approved equivalent
20	Instrument Isolation Valves/Manifolds	Parker / Swagelok / Hylok
21	SS316L Impulse Tubing	Sandvik / Swagelok / Parker
22	Instrument Cables	Polycab / KEI / Universal / Finolex / BHEL-approved equivalent
23	Power & Control Cables	Polycab / KEI / Universal / Finolex / BHEL-approved equivalent
24	Cable Trays/Supports	BHEL-approved/reputed manufacturer
25	Ferrules/Cable Identification	Partex / Phoenix Contact / Weidmüller
26	SS316 Nameplates	Vendor standard / BHEL-approved
27	FRP Weather Canopies	BHEL-approved manufacturer/equivalent

Equivalent makes shall be subject to BHEL/Purchaser approval and shall fully comply with this specification and have suitable proven service experience.

14.0 COMMISSIONING SPARES

The Vendor shall supply commissioning spares identical to the supplied equipment.

Sl. No.	Item	Quantity
1	Mechanical Limit Switches	2 Nos.
2	------	------
3	Push Buttons used in LPB	10% of the total installed quantity (minimum 2 Nos. of each type/color)
4	LED Indication Lamps used in LPB	10 Nos. of each color/type per system(minimum 2 Nos. of each type/color)
5	Lamp Holders	5% of the total installed quantity (minimum 1 No. of each type)
6	Terminals/Terminal Blocks used in LPB, Power JB, Control & Signal JB	20% of the total installed quantity of each size and type
7	Local/Remote switch knob	10% (1 No minimum) used in LPB station
8	Miniature Circuit Breakers (MCBs)	5% of the total installed quantity (minimum 1 No. of each rating)
9	Control/Interposing Relays	5% of the total installed quantity (minimum 1 No. of each type)
10	One complete spare set of actuator electronic/control modules of each type actually supplied, including control electronics, power supply module and position/communication module, where separately replaceable	1 No of each type & Rating
11	Selector Switches	5% of the total installed quantity (minimum 1 No. of each type)
12	Gasket 3.15Thick, 100 Wide	5 Meters
13	Fasteners including insulation studs	10% of all types

14	Flange Hardware (Hex, HD, Bolt, Bolts & Washers), M20 X 50	30 Sets

Notes

1. Commissioning spares shall be supplied with the main equipment and packed/identified separately.
2. Spares shall be of the same make, model and rating as the supplied equipment.
3. Where calculated quantity is less than one, a minimum of one spare shall be supplied.
4. A detailed commissioning spare list shall be submitted for BHEL/Purchaser approval prior to dispatch.
5. Commissioning spares shall be clearly marked **"COMMISSIONING SPARES"** and shall be separately packed from the main equipment.

15.0 IDENTIFICATION AND DOCUMENTATION OF PACKAGES

Each package shall be clearly marked with:

- Project Name.
- Purchase Order Number.
- Equipment Description.
- Tag Number.
- Manufacturer.
- Model/Type.
- Serial Number, where applicable.
- Package Number.
- Gross Weight.
- Net Weight.
- Centre of Gravity.
- Country of Origin.
- Handling instructions such as "THIS SIDE UP", "KEEP DRY", "FRAGILE" and "DO NOT STACK", as applicable.

A waterproof document pouch shall be attached to the package containing the packing list and applicable inspection/test documents.

16.0 PACKING AND PRESERVATION

16.1 All packing lists shall clearly identify **Electrical, Instrumentation and electronic items** separately, including box/package number and contents.

16.2 Loose electronic and sensitive Electrical/C&I items shall be identified separately in the packing documentation and shall be provided with suitable export/import-grade moisture-proof, anti-static and shock-protected packing

16.3 Sensitive electronic equipment shall be provided with suitable moisture-barrier packing and desiccants/humidity indicators, as applicable.

16.4 Equipment shall be securely restrained within packing cases. Cable entries, terminals and communication ports shall be protected with suitable caps/plugs.

16.5 Packages shall be suitably marked with handling instructions including ***FRAGILE, KEEP DRY and THIS SIDE UP***, as applicable.

16.6 The Vendor shall ensure that packing is suitable for outdoor storage under high ambient temperature and heavy-rain conditions.

COPYRIGHT AND CONFIDENTIAL
The information on this document is the property of BHARAT HEAVY ELECTRICALS LIMITED.
It must not be used directly or indirectly in any way detrimental to the interest of the company.

COPYRIGHT AND CONFIDENTIAL
The information on this document is the property of BHARAT HEAVY ELECTRICALS LIMITED.
It must not be used directly or indirectly in any way detrimental to the interest of the company.

17.0 VENDOR RESPONSIBILITY

17.1 The Vendor shall be fully responsible for the complete EC&I scope within the defined GD package battery limit, including design, selection, sizing, supply, integration, testing, calibration, documentation and accessories.

17.2 The Vendor shall coordinate all EC&I interfaces with the GD mechanical supplier and the Purchaser's GT Control System.

17.3 The Vendor shall ensure that all supplied equipment is fully compatible and correctly integrated with the approved GD control philosophy and Mark VIe interface.

17.4 The Vendor shall be responsible for correcting, without additional cost, any deficiency arising from inadequate design, selection, sizing, integration, testing, packing or documentation.

17.5 All Vendor calculations, drawings, datasheets, schedules and certificates shall reflect the actual supplied configuration.

17.6 No deviation from this specification shall be considered accepted unless specifically approved in writing by BHEL/Purchaser.

17.7 The Vendor shall provide all minor/material accessories necessary for a complete and operational system, even where such items are not individually listed.

VENDOR COMPLIANCE / NO-DEVIATION REQUIREMENT

The Vendor shall review the complete specification and shall submit a clause-wise Compliance Statement along with the technical offer. The Vendor shall clearly confirm "**COMPLIED – NO DEVIATION**" against each requirement where full compliance is offered. Any deviation, exclusion, qualification, limitation or exception shall be specifically identified against the relevant clause, with complete technical details and justification. General statements such as "Noted", "Accepted", "Complied as per Vendor standard", or reference to the Vendor's standard specification/catalogue shall not be considered as compliance.

In the absence of any specifically identified deviation in the Vendor's Compliance/Deviation Statement, the complete specification shall be deemed to be fully complied with by the Vendor.

No deviation shall be considered accepted unless specifically approved in writing by BHEL/Purchaser.

Vendor Declaration

We hereby confirm that our offer complies fully with all requirements of this specification, except for the deviations specifically identified in our submitted Compliance/Deviation Statement.

Vendor Name: _____

Quotation No.: _____

Date: _____

Name & Designation: _____

Signature & Company Stamp: _____

COPYRIGHT AND CONFIDENTIAL
The information on this document is the property of BHARAT HEAVY ELECTRICALS LIMITED.
It must not be used directly or indirectly in any way detrimental to the interest of the company.

18.0 RECORD OF REVISIONS

Rev. No.	Date	Revision Details	Revised By	Approved By
00	28.08.2026	First Issue	SWATHI	SRIKANTH

COPYRIGHT AND CONFIDENTIAL
The information on this document is the property of BHARAT HEAVY ELECTRICALS LIMITED.
It must not be used directly or indirectly in any way detrimental to the interest of the company.

MANDATORY SPARES FOR ELECTRICAL, C&I ITEMS

DANGOTE REFINERY (Fr6B)

SCOPE:

All spares shall be identical in make, model, rating, material and specification to the equipment supplied under the main contract and shall be fully interchangeable.

VARIANT TABLE-1

Sl. No.	BHEL Material Code	Description	Qty.	Remarks
1	GT9756940018	Differential Pressure Gauge for Gas Flow Diverter (GFD) System	1 No.	Same make and model as supplied for Variant-10 of GT54276
2	GT9756940026	Differential Pressure Transmitter for GFD System	1 No.	Same make and model as supplied for Variant-10 of GT54276
3	GT9756940034	Position Transmitter for GFD System	1 No.	Same make and model as supplied for Variant-10 of GT54276
4	GT9756940042	Electric Motor Operated Actuator (MOV)	1 Set	One complete actuator (used in Variant-10 of GT54276) of each make/model used for GFD, GFD-GV and BFV drives (Complete with motor, gearbox, limit switches, torque switches, position transmitter and all accessories).
5	GT9756940050	Differential Pressure Gauge for Guillotine Damper (GD) System	1 No.	Same make and model as supplied for Variant-11 of GT54277
6	GT9756940069	Differential Pressure Transmitter for GD System	1 No.	Same make and model as supplied for Variant-11 of GT54277
7	GT9756940077	Electric Motor Operated Actuator (MOV)	1 Set	One complete actuator (Variant-11 of GT54277) of each make/model used for GD, GD-GV and BFV drives (Complete with motor, gearbox, limit switches, torque switches, position transmitter and all accessories).

Notes

1. All mandatory spares shall be new, unused, and identical to the equipment supplied under the main package.
2. The spares shall be supplied with all associated mounting hardware, wiring accessories, calibration certificates and test certificates, wherever applicable.

3. All mandatory capital spares shall be packed separately, clearly tagged and identified as "MANDATORY SPARES".

4. The Vendor shall guarantee complete interchangeability of the supplied spares with the installed equipment throughout the warranty period.

COPYRIGHT AND CONFIDENTIAL
The information on this document is the property of BHARAT HEAVY ELECTRICALS LIMITED.
It must not be used directly or indirectly in any way detrimental to the interest of the company.

RECORD OF REVISIONS

Rev. No.	Date	Revision Details	Revised By	Approved By
00	18.07.2026	First made.	SWATHI	KSK

COPYRIGHT AND CONFIDENTIAL
The information on this document is the property of BHARAT HEAVY ELECTRICALS LIMITED.
It must not be used directly or indirectly in any way detrimental to the interest of the company.

TRP APPLICATION ON FERROUS COMPONENTS OF DIFFERENT PRODUCTS

1. SCOPE:

1.1 The standard covers the selection and applications of Temporary Rust Preventives (TRP) for different products & their components during production, before despatch and at site.

1.2 This standard supersedes the old company standard and other Product Standards/ documents made on the subject.

2. GENERAL:

The effectiveness of TRP depends on the following aspects:

2.1 Selection of proper TRP.

2.2 Proper preparation of the surface to be protected. Refer plant standard HY 067 41 66.

2.3 Application of TRP – Under normal atmospheric conditions, corrosion of machined surfaces starts as soon as they are accessible to moisture, air etc. Hence it is necessary to apply rust preventive immediately after the machining of surfaces.

2.4 TRP – Reference on manufacturing & erection instructions/drgs. wherever necessary by Engg.

3. SELECTION OF TRPs:

The list of rationalized TRPs, is given in Annexure - I. This covers various types, method of application, durability of protection, equivalent brands etc.

4. SURFACE PREPARATION: (For details refer plant std HY0674166)

Before application of TRPs, it is necessary to ensure that the surfaces are free from rust, dust, dirt, grease, oil etc. The effectiveness of TRP depends on the cleanliness of the surface.

Copyright and Confidential
The information on this document is the property of BHARAT HEAVY ELECTRICALS LIMITED.
It must not be used directly or indirectly in any way detrimental to the interest of the company.

RESTRICTED USE
BHEL-HYD EDAS INFORMATICS CENTRE

5. TRP APPLICATION:

5.1 The application of TRPs is classified in Annexure II keeping in view the finish and the extent of protection required.

5.2 The details of components against each category of application are given productwise in the Annexure III.

6. PRECAUTIONS FOR APPLICATION:

6.1 The TRP shall be stirred well in the original container so as to make a homogenous mixture of its constituents.

6.2 The container, brush, cloth to be used for application of TRP shall be clean. The container and the brush shall be washed with white spirit, for the next operation.

6.3 Preservative shall be applied in closed premises not later than 3-5 hours after cleaning and degreasing. Application shall not be done in humid atmosphere and during sharp changes in temperature, which may cause sweating.

6.4 Care shall be taken to see that the preservative coating is uniform and without overflow or gaps, bald spots, and flows in. Each subsequent layer shall be coated after the preceding one dries up completely.

6.5 The quality of preservative layer shall be checked by visual inspection for uniform coat. Any defect observed shall be immediately rectified.

7. DURABILITY OF PRESERVATION:

The durability of preservation varies from 6 months to 1 year depending on the category of TRP application refer Annexure–I. After this period, it is necessary to inspect the preserved parts and if necessary carry out re-preservation after cleaning and making the surfaces free from corrosion, if any.

8. DETAILS OF REPRESERVATION TECHNIQUES:

8.1 The earlier coating shall be removed by using white spirit.

8.2 Rust if any shall be removed with fine emery paper. Care shall be taken to see that precision machined surfaces like Journal surfaces shall not be damaged during this operation.

8.3 Surfaces prepared for re-preservation shall not be touched by hand.

8.4 The duration of re-preservation shall be as per the durability of protection specified in Annexure I. After drying, re-preservation shall be carried out in accordance with clause 6

Copyright and Confidential
The information on this document is the property of BHARAT HEAVY ELECTRICALS LIMITED.
It must not be used directly or indirectly in any way detrimental to the interest of the company.

RESTRICTED USE
BHEL-HYD EDAC INFORMATICS CENTRE

9. DEPRESERVATION BEFORE ASSEMBLY / ERECTION:

9.1 Depreservation of the various parts shall be done during Assembly/erection period as and when necessary.

9.2 Depreservation of parts consists of removal of TRP coatings from all the machined surfaces with white spirit.

9.3 Degreasing or cleaning of any forged components like rotors, blades, shafts etc., shall not be done with Chlorinated Solvents like Carbon Tetrachloride.

Preservative Instruction to Site:

1. This standard on preservation of different products and components shall be followed.

2. As soon as the components are received at site, they should be examined for rupture of TRP film, VCI paper and development of rust, if any. Patch work wherever necessary should be done with the TRP system.

3. The components should be stored in such a way that TRP film does not get damaged.

4. The surface of TRP coated components shall be examined for damage and corrosion spots regularly.

5. Represervation shall be followed as per the Tag attached to the component.

6. Inspect coated and wrapped surfaces. If coating or wrapping appears to have been removed during shipping clean and re-wrap or coat as applicable.

7. Inspect shafts for adequate preservative and add a heavy film of valvoline TECTYL 894 or Equivalent as necessary.

8. Rotate the Rotors a few revolutions every month and ensure that the bearings are packed with grease.

Copyright and Confidential
The information on this document is the property of BHARAT HEAVY ELECTRICALS LIMITED.
It must not be used directly or indirectly in any way detrimental to the interest of the company.

RESTRICTED USE

BHEL-HYD EDAS INFORMATICS CENTRE

RECOMMENDED TYPES OF TRPs

(Clause – 3) **ANNEXURE-I**

Type of TRP	Description of TRP/SPEC. No.	Method of Application	Durability of Protection	Equivalent Brands
Hard Film Solvent deposited	Rust Preventive Hard Film Black AA55154	Dipping, Spraying, Brushing	6 months	HE 1710 (Bhopal)
	Rust Preventive Hard Film Yellow AA55155	Dipping, Spraying, Brushing	1 year	HE 1706 (Bhopal)
Soft Film deposited	Rust preventive solution, clear (TRP) AA55152	-Do-	6 months	HE 1709 (Bhopal)
	Rust solution, Steam washable (TRP) AA55151		3 months	HE 1712 (Bhopal)
Grease	Temporary Corrosion Preservative Grease IS:958	Smearing Brushing	6 months	IOC Multi-Purpose Grease No.2
Oil	Rust inhibitive oil (TRP) AA55153	Dipping, Rinsing, Spraying,	3 weeks	HE 1711 (Bhopal)
	Temporary corrosion Preventive Fluid IS:1153		6 months	ESSO: RUST BAN 394
Powder/ Tablet	Volatile Corrosive inhibitor (VCI) powder/tablet IS:5730	Sprinklin	3 months	
Paper	VCI paper IS:6263	Wrapping	3 months	
Gas	Nitrogen Blanketing	Filling	3 months	
Crystal	Silica-jel	Inserting	3 months	

Copyright and Confidential
The information on this document is the property of BHARAT HEAVY ELECTRICALS LIMITED.
It must not be used directly or indirectly in any way detrimental to the interest of the company.

RESTRICTED USE
BHEL-HYD EDAC INFORMATICS CENTRE

TRP APPLICATION CATEGORIES

(Clause – 5)

ANNEXURE-II

TRP Appli-cation Category	Application Details	Guide Lines for Selection
A	Apply 1 Coat of Rust Preventive Hard Film yellow (HE 1706) / AA55155 and 1 Coat of Rust Preventive Hard Film Black (AA55154)/HE1710. Wrap the surfaces with Volatile Corrosive inhibitive (VCI) paper with its active side facing the surfaces. Fix the ends with adhesive tape. Wrap the surfaces with rubber sheet and then with aluminium foil of thickness 0.05 to 0.1 mm. Fix the adhesive tape.	Longer duration of protection before despatch to site. Suitable for precision machined surfaces with simple profiles, eg. Rotor Journal Surfaces
B	Apply 1 Coat of Rust Preventive Hard Film yellow (HE 1706) /AA55155 and 1 Coat of Rust Preventive Hard Film Black (AA55154)/ HE1710.	Longer duration of protection before despatch to site. Suitable for precision machined surfaces like parting plane suraces, covers, couplings, base plates, machined cross around pipes etc.
C	Apply 2 Coats of Anti Rust solution, steam washable (TRP) (AA55151) / HE1712	Steam Turbine components of complicated profiles where steam washing facility is available eg. Steam Turbine rotor components.
D	Apply 2 Coats of Rust Preventive solution, Clear (TRP) (AA55152) / HE1709	Steam Turbine components of complicated profiles where there is no facility for steam washing.
E	Apply 2 Coats of TRP fluid (IS:1153)	Steam Turbine components of complicated profiles. The TRP is with brown Pigment.
F	Apply 1 Coat of Rust inhibitive oil (TRP) (AA55153) / HE1711	Machined components during the process, Storage on shop floor over 1 month upto 3 months.
G	Apply Temporary Corrosion Preventive Grease IS:958 liberally and wrap in polythene sheet/bag and tie it with a thread	Suitable for Fasteners, chains, Gear Wheels etc.
H	Wrap with 2 layers of VCI paper IS:6263 and one layer of Polythene Sheet.	Suitable for commutator of Armature, Bushings.
I	Sprinkle VCI powder/tablets IS:5730 inside pipe. Close the ends by plastic caps and adhesive tape.	Inside oil pipes.

Copyright and Confidential
The information on this document is the property of BHARAT HEAVY ELECTRICALS LIMITED.
It must not be used directly or indirectly in any way detrimental to the interest of the company.

RESTRICTED USE

BHEL-HYD EDAS INFORMATICS CENTRE

PLANT STANDARD
HYDERABAD

ANNEXURE – II

TRP Appli-cation Category	Application Details	Guide Lines for Selection
J	Draining after Hydro Test drying with hot air, evacuation of the vessel and Nitrogen blanketing.	Suitable for the water chamber and the shell side of Heat Exchanger
K	Keep silica-jel bag inside suction and discharge branches, close all opening close all tapped holes with red plastic caps (HY7242375 for G threads, HY7242579 for NPT threads). Close all flanged openings with suitable metal covers (HY7790963).	Suitable for all exposed tapped holes and flanged openings on the pumps and Tubings.

Copyright and Confidential
The information on this document is the property of BHARAT HEAVY ELECTRICALS LIMITED.
It must not be used directly or indirectly in any way detrimental to the interest of the company.

RESTRICTED USE
BHEL-HYD EDAC INFORMATICS CENTRE

PRODUCT COMPONENTS – TRP CATEGORIES
(CLAUSE –5.2)

ANNEXURE –III

DETAILS OF COMPONENTS	TRP APPLICATION CATEGORY
STEAM TURBINE AND COMPRESSORS HP,LP and other rotors. Rotor Journals, Thrust Collars	A
Base plate machined.	B
Crossed around pipes, machined	B
Bearing pedestals with assembled parts and bearing housings Outer machined surfaces	B
HP turbine outer casings Outer machined	B
HP, LP and other rotors. Rotor coupling flange faces, coupling bolt holes	B
Welded low pressure Turbine components Longitudinal Grider and front Outer machined	
LP upper part outer machined surface	B
LP inner outer casings outer machined surface	B
LP Inner, inner casings outer machined surface	B
Fasteners of Threaded portions Unthreaded portions (M64 and above)	B
HP Exhaust Elbow outer machined surface	B
Shaft lifting and clearance measuring device, machined surface	B
Assembly fixtures for HP Turbine, machined surface	B
Turning over device for HP Turbine, machined surface	B
Transportation device for HP Turbine, machined surface	B
Oil tank Outer machined surface	B
Injector Nb. 300 Outer machined surface	B
Main steam and re-heat strainer body Outer	B
Cast exhaust hood Outer machined surface	B

Copyright and Confidential
The information on this document is the property of BHARAT HEAVY ELECTRICALS LIMITED.
It must not be used directly or indirectly in any way detrimental to the interest of the company.

RESTRICTED USE

BHEL-HYD EDAS INFORMATICS CENTRE

PLANT STANDARD
HYDERABAD

ANNEXURE –III

DETAILS OF COMPONENTS	TRP APPLICATION CATEGORY
Cross around pipes, inner	C
Valves-casings and covers	
Inner un-machined surface	C
Bearing pedestals with assembled parts and bearing housings	
Outer un-machined surface	C
HP and outer turbine outer casing-	
Inner	C
HP and IP inner casing and diaphram-carrier and guide blade carrier-	
Outer	C
Inner	C
HP, LP and other rotors.	
All surfaces except journals, Thrust collars	
Flange cases and coupling bolt holes	C
STEAM TURBINE AND COMPRESSORS	
Welded low pressure Turbine components -	
Logitudinal Girder and front valves	
Inner	C
LP upper part,	
Inner	C
LP Inner, outer casings	C
Inner including blades	C
Outer un-machined	C
LP Inner, inner casings	
Inner including blades	C
Outer un-machined	C
Cover for shaft sealing casing	
Inner	C
Steam inlet and extraction connections	
Inner and outer	C
HP Exhaust elbow	
Inner	C
Handling Barring Gear and hydraulic Gear oil tank	
Inner	C
Injector Nb.300	
Inner	C
Main steam and re-heat strainer body	
Inner	C

Copyright and Confidential
The information on this document is the property of BHARAT HEAVY ELECTRICALS LIMITED.
It must not be used directly or indirectly in any way detrimental to the interest of the company.

RESTRICTED USE
BHEL-HYD EDAC INFORMATICS CENTRE

ANNEXURE –III

DETAILS OF COMPONENTS	TRP APPLICATION CATEGORY
Blanking arrangement for strainer body Oil strainer Main steam and reheat strainer handling device, machined Oil throttle valve, inner Oil stripper journal Cast exhaust hood Inner	C C C C C C
Compressor Rotor	D/E
Bearings, Oil seals, couplings, spare blades, gland ring Lifting beams and clamps machined Valves – casings and covers Inner machined Spindles Fasteners of Threaded portions Unthreaded portions Emergency Governor Piping of governing and LP bypass central rack and supply unit for valves, inner Suspension arrangement for ESU and interceptor valve Machined surfaces and springs Tools and tackles for governing equipment, machined	G G G G G G G G G
Oil pipeline outside the governing equipment Other pipings	I I
ELECTRICAL MACHINES Rotor Journals, Slip rings, Journals of Armature	A
Stator End Flanges, machined flanges, Machined surfaces of Foundation Frames, Base plates. Machined components, Base plates, Machined surfaces of Oil cooler, Air cooler, Accessories	B B
Rotor coupling face, threaded holes of exposed surfaces, bearing shells. Fasteners, internal/external threaded surfaces	G
Commutator of Armature, Bushings	H

Copyright and Confidential
The information on this document is the property of BHARAT HEAVY ELECTRICALS LIMITED.
It must not be used directly or indirectely in any way detrimental to the interest of the company.

RESTRICTED USE

BHEL-HYD EDAS INFORMATICS CENTRE

PLANT STANDARD
HYDERABAD

ANNEXURE –III

DETAILS OF COMPONENTS	TRP APPLICATION CATEGORY
SWITCHGEAR Hydraulic pistons	A
Operating mechanisms after testing and before shipment HLD Base frame, Machined Flange surfaces and mechanism housing, Terminal butting surfaces.	D/E
Machined Ferrous components like shafts, pins, gears Springs, links and levers, castings, machined surfaces of fabricated housings, catches, latches, rollers protective pipe flanges.	F
Chains and bearings, pull rod (threaded portion), Base frame Tapped holes, external/internal threaded surfaces, fasteners.	G
HEAT EXCHANGERS inside condenser shells, inside deaerator shells, machined surfaces of flanges and drilled tube sheets/ support plates	D/E
Inside of Rectangular and very large condensers. Machined surfaces of condenser, tube sheets.	G
Inside water chamber and shell side of feed water heaters	J
OIL FIELD EQUIPMENT Rig instrumentation Valves and disconnectors dampers for gauges, indicating instruments. Mud Agitators Machined surfaces of mud system Hoisting and rotating equipment Rotory, Swivel, travelling block, Hydra Hooks Mud system Centrifugal pump, external surfaces of mud agitators Mud pump external surfaces, loose parts of mud pump. Mud pump internal surfaces with oil contact.	 G G G G
Centrifugal pump, mud pump internal surfaces with liquid contact. (Except Oil)	L

Copyright and Confidential
The information on this document is the property of BHARAT HEAVY ELECTRICALS LIMITED.
It must not be used directly or indirectly in any way detrimental to the interest of the company.

RESTRICTED USE
BHEL-HYD EDAS INFORMATICS CENTRE

ANNEXURE – III

DETAILS OF COMPONENTS	TRP APPLICATION CATEGORY
BOWL MILLS Machined surfaces	D/E
Inside Gear case assembly	F
Bearings, Drive couplings, fastener, external/internal threaded surfaces	G
PUMPS Journal Bearings, bearing surfaces and exposed portion of shafts.	A
Exposed machined surfaces of ferrous components like thrust collar large fabricated frames, foundation frames, pump discharge covers, tubular cooler, catridge, keyway blocks of pump casings, Head gears, Canisters, Foundation Rings, elements, CWP parts.	B
Ferrous components stored in assembly shop, freshly machined surfaces with more than 1 to 3 months gap between one operation to another	F
Spare parts, fasteners, external/internal threaded joints	G
All exposed tapped holes and flanged openings on the pumps and tubings	K
GAS TURBINES Journal & Thrust Bearings, Rotor journals & Thrust collars	A
Ferrous components stored in assembly shop, freshly machined surfaces with more than one month gap between operations	F
All exposed tapped holes and flanged openings on the pumps	K
Exposed machined surfaces/parting planes of all ferrous fabricated frames including base plates, couplings	B
Fasteners, External/Internal threaded joints	G
Oil pipes when stored for long periods or when despatched loose	I
Torque converter – fill with lube oil, plug all openings If storage and/or despatch period together exceeds 3 months	
Fuel pump and flow dividers-fill with HSD, plug all openings, if storage and/or despatch period together exceeds 3 months	

Copyright and Confidential
The information on this document is the property of BHARAT HEAVY ELECTRICALS LIMITED.
It must not be used directly or indirectly in any way detrimental to the interest of the company.

RESTRICTED USE

BHEL-HYD EDAS INFORMATICS CENTRE

PLANT STANDARD
HYDERABAD

ANNEXURE – A

LIST OF SUPPLIERS OF TRP

M/S. BHEL, Bhopal - Rust preventive oil

M/S. Ceturion coatings, Madras - Rust preventive compound (proprietary)

M/S. Agromore Ltd., Bangalore - Rust preventive Agents

M/S. Mascot chemical works, Bangalore - - ‘’-

M/S. Chembond chemicals Pvt. Ltd., Bombay - - “ -

M/S. Pradeep Metal Treatment Chemical Pvt. Ltd., Thane - - “ -

M/S. Surendra Enterprises, Hyderabad - - “ -

M/S. Canning Mithra phomics Ltd., Bombay - - “ -

M/S. Grawer & Weil (Ind) Ltd., Bombay - - “ -

M/S. Metrit Industries, Bombay - - “ -

M/S. Electro chemicals, Calcutta - - “ -

M/S. CMF Systems, Secunderabad - - “ -

M/S. Peddainton chemicals Industries (Ind), Bombay - - “ -

M/S. Protochem Industries, Bombay - - “ -

M/S. Suprabha protective, Products, Pune - Rust Poliq – N (Proprietary)

M/S. OKS, 5/9, Primorse Road, - Bangalore - 560025
1) OKS – 240 Anti – seize compound
2) OKS – 1140 High Temperature Silicone grease
3) OKS – 410 Mos 2 High performance long life grease
4) OKS – 300 Mos 2 Mineral oil concentrate (Additive)
5) OKS – VCI : 368 N
6) OKS - VCI : 369 N
7) OKS - 2140
8) OKS - 2160
9) OKS - 2201

M/S. Prosol Chemicals Pvt. Ltd. - 1) Rustex - 221

M/S. Futech chemicals (P), Secundeabad - 1) Futech - AR (LT)

Copyright and Confidential
The information on this document is the property of BHARAT HEAVY ELECTRICALS LIMITED.
It must not be used directly or indirectly in any way detrimental to the interest of the company.

RESTRICTED USE
BHEL-HYD EDA INFORMATICS CENTRE

FIRST ANGLE PROJECTION

(ALL DIMENSIONS ARE IN mm)

DRG. NO. 2-365-02-61001

SH. 01 OF 01

THE INFORMATION ON THIS DOCUMENT IS THE PROPERTY OF BHARAT HEAVY ELECTRICALS LIMITED. IT MUST NOT BE USED DIRECTLY OR INDIRECTLY IN ANY WAY DETRIMENTAL TO THE INTEREST OF THE COMPANY

COMPUTER FILE NAME 23650261001-S02-R02

REF. DRG. NO.

SIGN. AND DATE

INVENTORY NO

GENERAL DIMENSIONAL LIMITS,FITS & TOLERANCES AS PER HY0230261

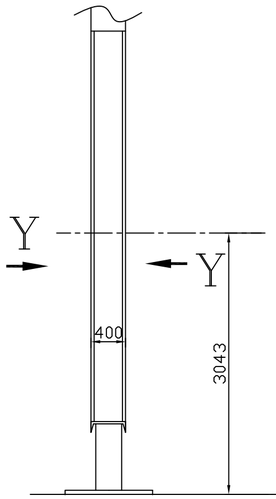

ELEVATION

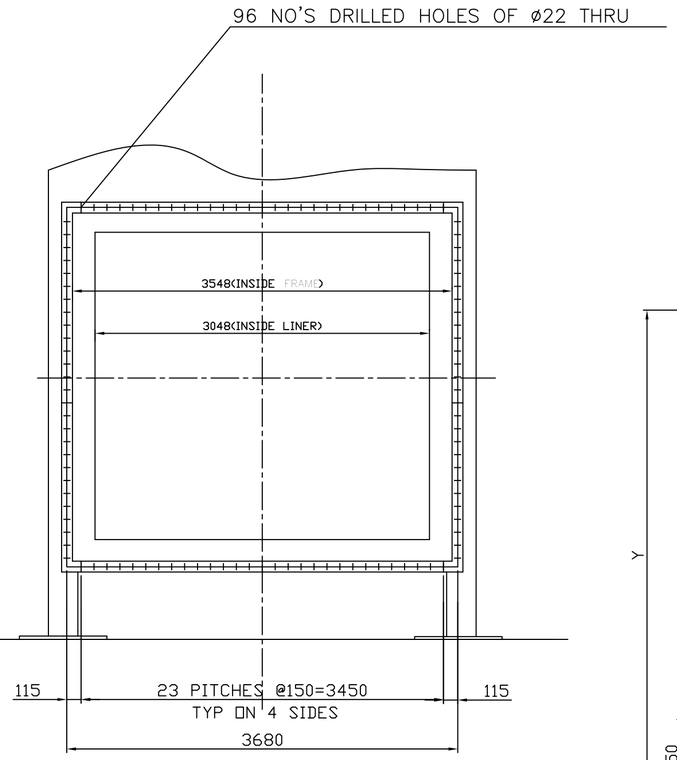

VIEW-Y

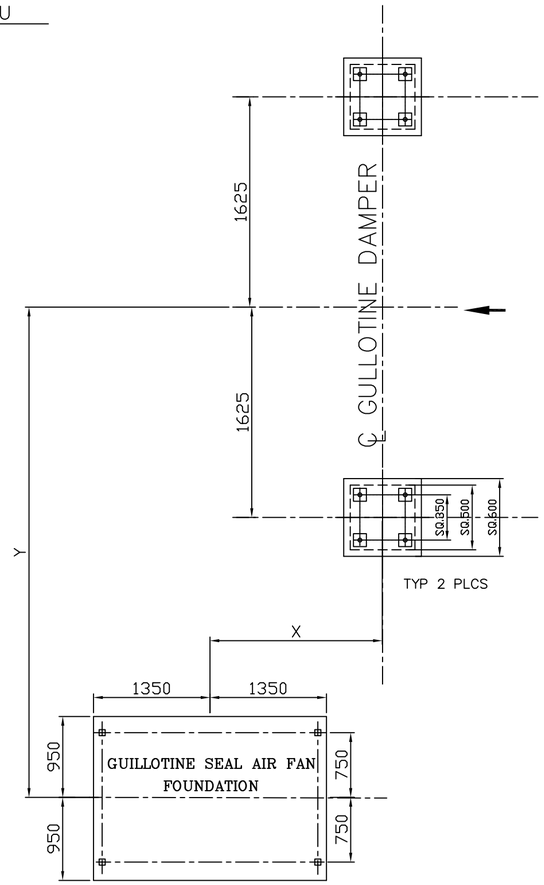

FOUNDATION DETAIL

GUILLOTINE DAMPER

DESIGN DATA:-

BLADE OPENING TIME	-240+/-10 Sec
MAX FLOW KG/HR	-624690 KG/Hr
NORMAL FLOW KG/HR	-445284 KG/Hr
MAX TEMP OF GAS	-615 DEG C
DESIGN/OPERATING PR	-650/380 MMWC
SEALING EFFICIENCY	-99.95 WITH OUT SEAL AIR -100% WITH SEAL AIR

NOTES:-

1. GUILLOTINE DAMPER SUPPLY SHALL BE AS PER GT54277.
2. SEAL AIR FANS LOCATION (X&Y) WILL BE FINALIZED DURING DETAILING STAGE.
3. GUILLOTINE DAMPER IS INTERNALLY INSULATED WITH CERAMIC WOOL.
4. REFER GENERAL ARRANGEMENT FOR GTG (1-366-09-6XXXX) SPECIFIC TO THE PROJECT FOR LAY OUT & INTERFACE INFORMATION.
5. PACKING AND SHIPPING SHALL BE DONE AS PER THE BHEL SPECIFICATION GT14024
6. LIFTING LUGS WELD JOINTS OF THE PACKING SHALL BE TESTED & APPROVED BY MPT(MAGNETIC PARTICLE TEST)
7. PREFABRICATED FRP CANOPY FOR ALL JB'S AND PB STATION'S SHALL BE PROVIDED.

REV.	DATE	ALTERED	REV.	DATE	ALTERED	REV.	DATE	ALTERED	REV.	DATE	ALTERED	REV.	DATE	ALTERED
		CHD/APPD			CHD/APPD			CHD/APPD	02	03.08.26	JOY CHD/APPD KRANTHI	01	18.03.14	CHK CHD/APPD BSN
		ZONE			ZONE			ZONE	ZONE		PAINTING, INSULATION & MOC DEATILS ARE REMOVED	ZONE		NEW SHEET ADDED. PAINTING , SURFACE FINISH, REFERENCE DOCUMENTS NEEDS TO BE REVIEWED DETAILS & MATERIAL DATA IS ADDED

TYPE OF PRODUCT OR NAME OF CUSTOMER/PROJECT: FR-6 ,GT

BHARAT HEAVY ELECTRICALS LTD. HYDERABAD

	NAME	SIGN.	DATE	NO.OF VAR.
DRN.	G.J.C.		11.08.04	
CHD.	B.S.N.		11.08.04	
APPD.	B.I.B.		11.08.04	

DEPT.	UNTOL. DIMS.		SCALE	WEIGHT (KG)	REF. TO ASSY. DRG.	ITEM NO.	NO.OF ITEMS
G.T.D CODE 423	GR. ~~C/M/F~~		1:75	N.A	-N.A.-	-N.A.-	-N.A.-

TITLE: DIVERTER & GUILLOTINE INTERFACE INFO

CARD CODE: N.A.

DRAWING NO. 2-365-02-61001 REV. 02

SHT. No 01 NO. 02 OF SHT.02

FIRST ANGLE PROJECTION

(ALL DIMENSIONS ARE IN mm)

DRG. NO. 2-365-02-61001

SH. 01 OF 01

THE INFORMATION ON THIS DOCUMENT IS THE PROPERTY OF BHARAT HEAVY ELECTRICALS LIMITED. IT MUST NOT BE USED DIRECTLY OR INDIRECTLY IN ANY WAY DETRIMENTAL TO THE INTEREST OF THE COMPANY

GENERAL DIMENSIONAL LIMITS,FITS & TOLERANCES AS PER HY02.30261

COMPUTER FILE NAME 23650261001-S02-R02

REF. DRG. NO.

SIGN. AND DATE

INVENTORY NO

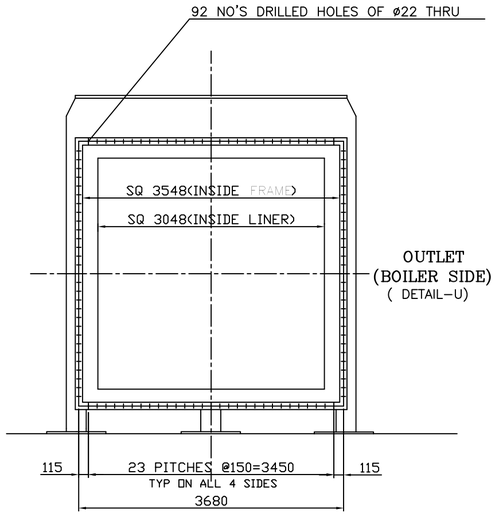

DETAIL-U

HRSG SIDE INTERFACE FLANGE

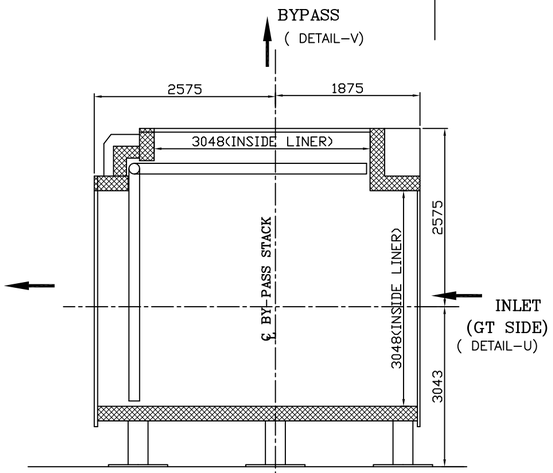

ELEVATION

DIVERTER DAMPER

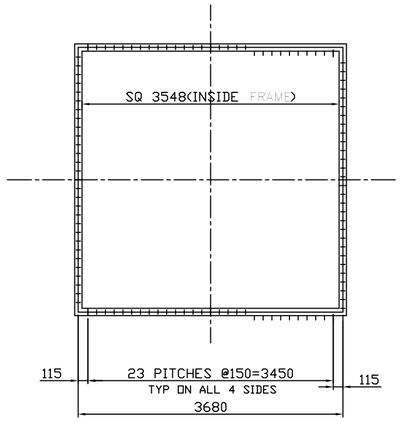

DETAIL-V

GT SIDE INTERFACE FLANGE

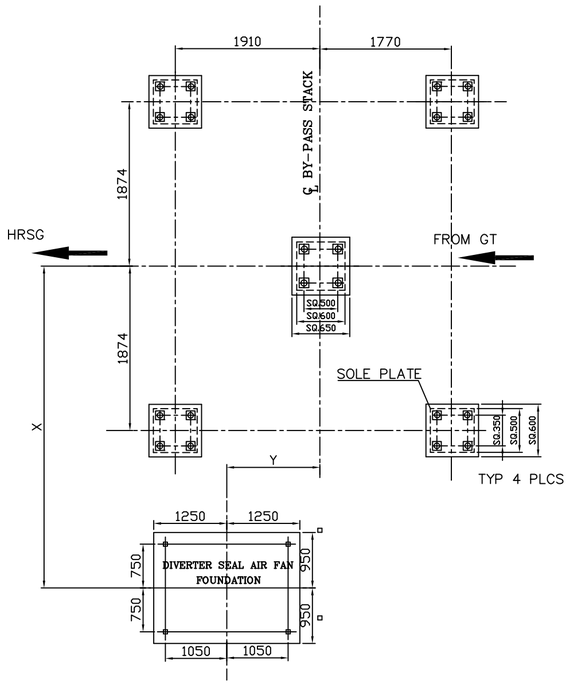

FOUNDATION OF DIVERTER AND SEAL AIR FAN DETAIL

DESIGN DATA:-

BLADE OPENING TIME	-60+/- 5 Sec
MAX FLOW KG/HR	-624690 KG/Hr
NORMAL FLOW KG/HR	-445284 KG/Hr
MAX TEMP OF GAS	-615 DEG C
DESIGN/OPERATING PR	-650/380 MMWC
OPERATING TIME	-60+/-5 SECONDS
SEALING EFFICIENCY	-99.95 WITH OUT SEAL AIR -100% WITH SEAL AIR
BLADE OPENING TIME	-60+/- 5 Sec

NOTES:-

1. DIVERTER DAMPER SUPPLY SHALL BE AS PER GT54276.
2. SEAL AIR FANS LOCATION (X&Y) WILL BE FINALIZED DURING DETAILING STAGE.
3. DIVERTER DAMPER IS INTERNALLY INSULATED WITH CERAMIC WOOL.
4. REFER GENERAL ARRANGEMENT FOR GTG (1-366-09-6XXXX) SPECIFIC TO THE PROJECT FOR LAY OUT & INTERFACE INFORMATION.
5. PACKING AND SHIPPING SHALL BE DONE AS PER THE BHEL SPECIFICATION GT14024
6. LIFTING LUGS WELD JOINTS OF THE PACKING SHALL BE TESTED & APPROVED BY MPT(MAGNETIC PARTICLE TEST)
7. CLADDING SHEETS OVERLAYING ARRANGEMENT SHALL BE ALONG THE FLOW DIRECTION.
8. PREFABRICATED FRP CANOPY FOR ALL JB'S AND PB STATION'S SHALL BE PROVIDED.

REV.	DATE	ALTERED	CHD/APPD
02	03.08.26	JOY	KRANTHI
01	18.03.14	CHKK	BSN

ZONE: PAINTING, INSULATION & MOC DEATILS ARE REMOVED

ZONE: NEW SHEET ADDED. PAINTING , SURFACE FINISH, REFERENCE DOCUMENTS NEEDS TO BE REVIEWED DETAILS & MATERIAL DATA IS ADDED

TYPE OF PRODUCT OR NAME OF CUSTOMER/PROJECT: FR-6 ,GT

BHARAT HEAVY ELECTRICALS LTD. HYDERABAD

	NAME	SIGN.	DATE
DRN.	G.J.C.		11.08.04
CHD.	B.S.N.		11.08.04
APPD.	B.I.B.		11.08.04

NO.OF VAR.

DEPT.	UNTOL. DIMS.	SCALE	WEIGHT (KG)	REF. TO ASSY. DRG.	ITEM NO.	NO.OF ITEMS
G.T.D CODE 423	GR. ~~C/M/F~~	1:75	N.A	-N.A.-	-N.A.-	-N.A.-

TITLE: DIVERTER & GUILLOTINE INTERFACE INFO

CARD CODE: N.A.

DRAWING NO. 2-365-02-61001 REV. 02

SHT. No 01 NO. 01 OF SHT.02