Bharat Heavy Electricals Limited
Heavy Plates & Vessels Plant
Visakhapatnam – 530 012
Andhra Pradesh, INDIA

Tel. : +91(0) 891 2881332 / 1359
E-mail : yvrrao@bhel.in
dnmurthy@bhel.in

INVITATION TO TENDER

Ref.: OS/24-25/8055/Deaerators/16/015 **Date: 05.09.2024**

Sub: Fabrication of Deaerator Storage Tank, Heaters and Loose Items against S.O. 8055 at ADM site of BHEL- HPVP, Visakhapatnam

Dear Sir,

Sealed tenders are invited for the subject work in **two-part bid** system from **IBR approved** Vendors who are experienced in fabrication of similar jobs and fulfil the eligibility criteria specified below in clause-1. Scope of work and techno-commercial terms and conditions are as follows.

1. ELIGIBILITY CRITERIA:

1.1 Bidders must have an experience of successful completion of similar works i.e., **Fabrication of Higher Diameter (≥ 3 Meters) Pressure Vessels/ Columns / Storage Tanks for Process Industries / Power Plants** during last 7 years ending 31st August 2024 for a minimum of one project. Bidders shall enclose Work Order, Work Completion Certificate and all other relevant documents from the customer in support of successful and satisfactory completion of the work.

1.2 Average Annual Financial Turnover of the bidder for the last 3 financial years should be a minimum of ₹ **37.50 Lakhs**. Bidders shall enclose Financial turnover certificate for previous three years issued by Chartered Accountant, Audited Profit & Loss Accounts, Balance Sheets and other necessary documents in support of the same.

In case audited financial statements are not available for latest financial year, then the applicable audited statements of preceding three financial years shall be considered.

1.3 Bidders shall also enclose the documents of **valid IBR Registration**, Registration of Firm/ Factory License/ Certificate of Incorporation, EPF, ESI, PAN, GSTIN, Udyog Aadhar Memorandum (if registered with MSME) etc.

1.4 The works executed in own name of the individual / firm of the tenderer will only be considered for eligibility criteria.

2. LOCATION OF WORK SPOT:

2.1) The fabrication work is to be carried out at ADM site of BHEL-HPVP, Visakhapatnam.

3. SCOPE OF WORK: Detailed scope of the fabrication work will be as follows:

The Details of the Equipments to be fabricated is given at Annexure-II and briefed below:

S.O. No.	Description of Item	Total Wt.
8055	a) Deaerator Heater & Loose items for Unit-I	56 MT
	b) Deaerator Storage Tank in 3 sections & Loose items and Deaerator Heater for Unit-II	221 MT
	Total	**277 MT**

It may be noted that the weight indicated above is tentative and may vary on both sides due to revision in the drawings, if any.

3.1) Complete Fabrication of Deaerator Storage tank in 3 sections, 2 Nos. of Deaerator Heaters & Loose Items which includes Marking, Cutting, Machining, Drilling, Assembly, Fit-up, Welding & Dressing, NDT, Hydro-test, Stage wise & Final IBR Inspection, Blasting & Painting etc., as per the approved Drawings, QAP / ITP, WPS, Procedures, Painting Schedule, IBR Specifications & Standards and loading of the equipments onto the trailer. It includes the following activities but not limited to the same:

1) Collection of all free issue items (Raw materials & BOCs) from HPVP Shops / Stores and transportation to ADM site and Unloading the same at ADM site.

2) Fabrication involves operations like Marking, Cutting, Machining, Edge Preparation, Drilling, Assembly, Fit-up, Welding & dressing, NDT like LPI, MPI, Radiography, Hydro-testing etc., as per approved QAP & drawings.
3) Shell segments in Rolled condition with L-Seams in Tack welded condition shall be provided by BHEL-HPVP. Re-rolling, if required will be done by BHEL-HPVP for which Transportation of Shell segments from ADM site to Production shops and back to ADM site after re-rolling is in vendor's scope.
4) Height marking, Edge Preparation, Assembly, NDT & Welding of Dished ends with Shells as per approved drawings, QAP & Specifications.
   Formed Dished ends & Spherical Dishes shall be provided by BHEL-HPVP.
5) Fabrication of External & Internal attachments like Stiffeners, Manhole Assemblies, Spider Assembly, Vortex Breaker, Support Rings, Pipe Davits, Manhole doors, Stiffener rings, Pipe supports, RF Pads, Lifting Trunions / Lugs, Nozzle assemblies with pipes & pipe fittings, Saddles, Instrument Tappings etc.**,** including Marking, Cutting, Rolling / pressing of plates, fit-up, Welding, NDT etc., as per approved drawings & QAP.
6) Template of Down Comer Nozzles is to be fabricated by the vendor.
7) Fabrication and Fixing of CS / SS internals and Loose items as per approved drawings & QAP.
8) Transportation of Deaerator Storage Tank sections and Deaerator Heaters along with Dished end assemblies to HPVP shops for SR and back to ADM site after SR.
9) Local SR of Closing C-Seam of Deaerator Heaters.
10) Hydro-test is to be carried out for Deaerator Heater and Stand Pipe Assembly at Test pressure specified in the drawings followed by Draining, Drying & Cleaning. Water will be made available at one point and laying of necessary piping for filling has to be arranged by Vendor. Arranging of all the accessories required for the Hydro-test like Filling Pump, Pressurizing Pump, Calibrated Pressure Gauges including fabrication of Stems for Fixing of Pressure Gauges, Non-Return Valves etc., is in the vendor's scope. Water available at ADM site is to be tested at NABL approved laboratory for its suitability for Hydro-test to meet the Specifications and if not suitable, the required water has to be arranged by the Vendor.
11) Surface preparation by Blast Cleaning and Coating of Primer & Finish Paints as per approved Painting Schedule/ Standards & specifications of BHEL. All tests required as per Job Specifications and BHEL Painting Procedure shall be carried out by a qualified agency for testing of painting and obtaining stage wise inspection clearance from HPVP (QC) / TPIA / IBR as per approved drawings & QAP.
12) Painting is to be carried out only by Painters qualified by HPVP as per standard format.
13) Letter painting of Dispatch particulars in a prescribed / specified format.
14) Loading of finished equipments onto the trailer using BHEL crane by providing necessary manpower, tools & tackles and Welding of all temporary supports required for transportation of the same to the customer.
15) Final IBR documents including issuance of Form II (2), III and IVA from DCIB & DOB is in vendor's scope.
16) The IBR inspection fees for fabrication is to be paid by the vendor.
17) All consumables like Electrodes & Filler wires, Gases, Grinding wheels etc., required for fabrication are in the scope of the Vendor. The electrodes / filler wire shall be of BHEL approved makes only and the vendor shall submit the Batch Test Certificates to BHEL for verification before using on the job.
18) Welding is to be carried out by IBR qualified welders only. Qualification of welders, if required, shall be carried out by the vendor at their cost. However, Test samples shall be provided by BHEL as free issue.
19) Submission of economic cutting plans for the plate materials and approval shall be obtained from BHEL-HPVP before taking up fabrication. Wherever fabrication is done without proper approved cutting plans, any loss of materials arising due to the same will be recovered as per BHEL recovery rates.
20) Free issue items cleared by QC (Stores) to be collected within 3 days from the date of intimation without any failure. Any delay beyond the 3 days shall be considered for levying of L.D.

21) Vendor shall deploy crane suitable upto 14 MT cap. for handling of the raw materials, shell segments required during the fabrication. **However, for heavy components other than which can't be handled by 14 MT crane, BHEL will be deploying one no. of 75 MT Crawler crane for handling of shell sections. Diesel required for the operation of BHEL cranes will be Free Issue by BHEL.**
22) Vendor shall have to take up all the equipments simultaneously and engage sufficient man power separately for each equipment to meet HPVP delivery schedules.
23) Experienced Site-in-charge and Qualified Engineers & Supervisors shall be deployed for proper co-ordination of the job.
    Vendor shall obtain certification of BHEL Engineer-in-charge for the same and submit along with Bills for processing.
24) Vendors should deploy Experienced & Qualified QC personnel for carrying out the inspection activities in coordination with BHEL QC inspector / TPIA / IBR.
    Vendor shall obtain certification of BHEL Engineer-in-charge for the same and submit along with Bills for processing.
25) Vendors should deploy Qualified NDT personnel (Level III / Level II) at site for carrying out the NDT inspection activities in coordination with BHEL QC –NDT / TPIA / IBR. Vendors shall have to engage sufficient man power and resources for fabrication to meet HPVP delivery schedules.
    Vendor shall obtain certification of BHEL Engineer-in-charge for the same and submit along with Bills for processing.
26) Vendor shall deploy sufficient no. of calibrated Welding machines, Main Ovens & Portable Ovens required for baking of electrodes, other machinery at site. All relevant documents shall also be made available for verification & approval by BHEL - HPVP (QC) / TPIA/ IBR.
    Vendor shall obtain certification of BHEL Engineer-in-charge for the same and submit along with Bills for processing.
27) Required tools & tackles like Measuring instruments like Tape, Fillet & Butt Weld Gauges, Plumb bobs with magnets, Thermal Chalks / Pyrometer etc., shall be calibrated and valid calibration certificates must be presented, if required.
28) All the Scaffolding materials like Pipes, Clamps, Jallies etc., for temporary platform works required during the complete course of the fabrication, blasting and painting are to be arranged by the Vendor.
29) No extra rates are applicable for the additional joints to be made in Plates /Pipes/ Rolled sections.
30) Equipment details shall be hard stamped by encircling with paint and stencilled in a specific format with details of Project name, Customer No., Work Order No., PGMA No., Weight etc., for identification and dispatch as per the instructions of the outsourcing department. Fixing of Name plate, engraving / punching as per the details given in the drawings and rub-off.
31) Gate passes for the entry of Manpower, Materials, Cranes, Trailers etc., inside the premises of BHEL-HPVP are to be taken care by the vendor.
32) Sufficient Area lighting at the work place shall be arranged by the vendor at their cost.
33) Vendor's scope shall include arranging & laying of cables, arranging Distribution Boards with suitable capacity Switch Fuse units as incomer, all outgoings with necessary safe trips like MCB, ELCB etc., as per the industrial safety norms and their installation, all outgoing cables from Distribution Board, termination at the distribution board, Working Area Lighting.
34) Vendors shall have to return the excess / balance materials including off-cuts and total scrap available with the vendors exclusive of process allowance & invisible wastage to HPVP Stores after material reconciliation but before submission of their final bill. In case the same are not returned by the vendor, Recovery shall be made as per BHEL Rates / MSTC rates plus applicable taxes, prevailing at the time of processing of the final bills.
35) Any modification work due to revision of drawings during fabrication is to be carried out by the vendor without any extra cost.
36) Though not mentioned specifically, any activity which is required for completion of the work is deemed to be included in the scope of work of vendor without any price implication.

4. BHEL SCOPE: BHEL – HPVP shall provide the following as free issue:

4.1 IBR approved Drawings, GMS, QAP, WPS, Painting Schedule, applicable Procedures, Standards & Specifications.

4.2 Raw materials like full / off-cuts Plates, Pipes & Tubes, Round Bars, Structural items etc., Paints and BOCs like Pipe Fittings, Nozzles, Flanges, Fasteners, Gaskets, Trays, Spray Nozzles etc., as per GMS from HPVP stores. Transportation of these materials from BHEL-HPVP stores/shops to Fabrication yard at ADM site is in vendor's scope.

4.3 Shell segments in Rolled condition with L-Seams in Tack welded. Re-rolling, if required will be done by BHEL-HPVP. However, Transportation of Shell segments from ADM site to production shops & back to ADM site is in vendor's scope.

4.4 Formed Dished Ends and Spherical Dishes including NDT and Normalizing.

4.5 Blind Flanges / Blind covers, Gaskets and Fasteners required for Hydro-test.

4.6 Sectional bending of structural items, if required.

4.7 SR of the following Vessels shall be done in BHEL-HPVP shops:

a) Deaerator Storage Tank in 3 sections

b) Deaerator Heaters with one Dished end in welded condition and closing Dished end in tack welded condition.

However, Transportation of the Vessels from ADM site to HPVP shops for SR and back to ADM site after SR is in vendor's scope.

4.8 75 MT crane along with operator will be provided by BHEL free of charge for fabrication wherever crane arranged by the vendor will not serve the purpose. Maintenance of the BHEL crane including spares shall be in the scope of BHEL. However, Riggers required for handling the job shall be provided by the vendor. Diesel required for the operation of BHEL crane will be Free Issue by BHEL.

4.9 Area required for fabrication, site office and Stores at ADM site will be provided free of charge. All other arrangements for site enabling including Jungle Clearance & Surface Levelling etc., if required, shall be done by the vendor only.

4.10 Water and Power shall be provided free of charge at one point but further distribution to the desired location is in vendor's scope. In case of power failure, the vendor has to make alternative arrangement without any extra cost to BHEL.

5. INSPECTION:

5.1) Inspection shall be carried out by M/s. BHEL–HPVP, Vizag / BHEL Authorized Inspection Agency (TPIA) / Customer & IBR as per approved QAP. Vendor's scope includes co-ordination with IBR officials for Stage wise & Final Inspection and obtaining inspection clearances before proceeding for further operations along with all necessary documentation.

5.2) Fabrication Vendor shall be solely responsible for preparation and submission of all Inspection Reports & documents duly certified by Inspection Authority along with the finished equipments.

5.3) All the documentation related to inspection clearance of M/s. BHEL/TPIA/Customer & IBR, Generation of Inspection Reports, Preparation of Final Documents as per BHEL standard formats, Final IBR documents including issuance of Form II (2), III and IVA from DCIB & DOB etc., are included in the scope of vendor and scanned copy as well as hard copy of the same is to be submitted to BHEL-QA. The IBR inspection fees is to be paid by the vendor.

Note: QAP / MQP enclosed with the tender document is tentative only and may be subject to revision due to incorporation of comments of the approving authority. Hence, the approved QAP / MQP issued to the vendor after ordering shall only be followed for execution and inspection of the job.

6. DELIVERY:

6.1) Fabricated equipments & loose items along with inspection documents and all other relevant certificates are to be handed over to HPVP- Logistics at ADM site as per the instructions at the time of delivery and as per the following schedule:

Within 3 months from the date of issue of First consignment of free issue materials or 6 weeks from the date of issue of Last consignment of materials (Excl. Gaskets, Fasteners & Paints), whichever is later.

Note: a) **Time schedule is very stringent and Vendor has to deliver the job as per Customer requirement and schedule which will be meticulously monitored by BHEL/Customer. All necessary steps to reduce the cycle time for the individual sub-activities and main activities will be mutually discussed and Vendor has to mobilize additional resources as per time to time requirement to achieve the same.**

b) In case the delivery period offered by the vendor is more than the tender delivery, Price quoted by the bidder shall be loaded for additional period @1/2 % per week or part thereof for the purpose of evaluation of Bidder Status.

7. SITE MOBILISATION:

7.1) Successful bidders shall have to complete site mobilization within 7 days from the date of receipt of order or from the date of intimation for the same by BHEL whichever is later.

8. PRICE:

8.1) The price shall be quoted in the **Price Bid** as per the Schedule of Quantities & Rates for the detailed scope of work and the quoted price shall be inclusive of all applicable taxes & duties except GST.

8.2) The prices shall be fixed & firm without any escalation during the entire period of contract and till completion of the work.

8.3) GST shall be reimbursable to the vendor as detailed in Clause - 9 and as per Annexure – GST.

8.4) Income tax will be deducted at applicable rates from RA & Final bills.

9. GOODS & SERVICES TAX (GST):

9.1) Bidders shall make a note of the following points of GST before submission of their offer:

a) Vendors shall have to mention their GSTIN no. (15 Digits) in their Technical Bid. If any specific exemption is available, a declaration with due supporting documents need to be furnished for considering the offer.

b) Semi-finished goods are to be delivered by the Vendors in BHEL, HPVP premises within a maximum period of one year from the date of issue of the material, failing which the whole transaction will be considered as Supply & Sale and GST is required to be paid along with interest (calculated @ SBI Base Rate + 6%) along with penalty, if any, from the date of Challan on the whole value of materials. Hence vendors shall have to ensure that materials issued to them are returned within 365 days.

c) After fabrication, the vendors shall have to deliver the Semi - finished Goods by fulfilling the following formalities:

i) GST invoice should be raised by the vendors by paying GST on job work charges at applicable rates and by incorporating the HPVP GSTIN no. in the invoice for availing the reimbursement of GST from HPVP.

ii) The vendor shall also have to enter in their GST Return -1 (GSTR-1) the details of invoice raised for payment of GST so as to enable HPVP to avail input credit.

10. REVERSE AUCTION:

10.1) BHEL shall be resorting to Reverse Auction (RA) for this tender. RA shall be conducted among the techno-commercially qualified bidders. Business Rules for Reverse Auction are given at Annexure – V and Guidelines for Reverse Auction are available on our website, **www.bhel.com** → supplier registration → Guidelines for Reverse Auction 2021, before submission of their offer.

10.2) Sealed envelope / Electronic Price bids of all the techno-commercially qualified bidders shall be opened and the same shall be considered as initial bids of the bidders in RA. In case any bidder(s) do(es) not participate in online Reverse Auction, their sealed envelope price bid along with applicable loading, if any, shall be considered for ranking.

10.3) BHEL will inform bidders the details of service provider who will provide business rules, all necessary training and assistance before commencement of online bidding. The bidders participating in the Reverse Auction shall have to necessarily submit **'Process Compliance Form'** (PCF) to the designated Service Provider.

10.4) Bidders are advised to read the 'Business Rules' (Annexure – V) indicating details of RA event carefully, before reverse auction event.

11. RISK PURCHASE:

In case the contractor fails to execute the work within the scheduled time or due to any other reasons, BHEL - HPVP reserves the right to get the same completed through some other party at the risk & cost of the contractor and any additional expenditure incurred due to the same shall be charged to the contractor.

Non-performance of contract attracts penal provisions in line with BHEL Guidelines for Suspension of Business Dealings.

12. VALIDITY OF OFFER:

The offer shall be valid for a period of **3 months** from the date of Reverse Auction.

13. GENERAL:

13.1) The bidders shall study the Tender documents, Drawings, Quality Documents and all other relevant documents in detail for understanding the scope of work and the processes involved before submission of offer. Bidders shall get clarifications, if any, from concerned officials on the scope of work or any other details of the tender document, over phone between 09:00 AM and 04:00 PM on any working day or through e-mail.

13.2) **Conditional / Partial Price Bids** and any other deviations to the tender terms & conditions are not acceptable and BHEL reserves the right to reject such offers without further correspondence. Bidders shall confirm their acceptance to all the terms & conditions of the tender enquiry in the Techno-commercial Bids without any deviations.

13.3) BHEL reserves the right to modify or cancel the tender enquiry at any stage without assigning any reasons thereof.

13.4) The General Terms & Conditions, if any, contradicting with the specific terms & conditions given in the tender, then specific terms & conditions shall only be considered.

13.5) Other Terms & Conditions, whichever applicable, shall be as per Annexure – III enclosed.

14. The following documents shall form part of the tender enquiry including this Notice Inviting Tender:

PART - 1: TECHNO-COMMERCIAL BID

i)	Schedule of Quantities	: Annexure – I
ii)	List of Reference Drawings & Documents	: Annexure – II
iii)	General Terms & Conditions	: Annexure – III
iv)	Acceptance to tender terms & conditions	: Annexure – IV
v)	Business Rules for Reverse Auction	: Annexure – V
vi)	GST Compliance for Indigenous Suppliers	: Annexure – GST
vii)	Drawings, QAP / MQP etc.	

PART - 2: PRICE BID

viii) Price Bid (Schedule of Quantities & Rates)

15. TENDER SUBMISSION (Through e-Procurement system):

15.1) The tender completed in all respects shall be submitted in **Two parts** (Techno-commercial bid and Price Bid) through online e-procurement portal (https://eprocurebhel.co.in) latest by **13:00 Hrs. on 16.09.2024.**

Note: Techno-commercial bid along with all the tender documents shall be duly signed & stamped by the bidder on all pages.

15.2) Submission of offer by the bidder implies that all the tender documents were read by the bidder and the bidder is aware of the scope and specifications of the job.

15.3) **OFFERS SENT IN ANY OTHER FORM WILL BE TREATED AS INVALID AND WILL BE SUMMARILY REJECTED.**

16. TENDER OPENING:

16.1) Techno-commercial Bids will be opened on **16.09.2024 at 15:00 Hrs**. in online e-procurement portal.

16.2) After evaluation of the Techno-commercial Bids, intimation regarding date & procedure of conducting Reverse Auction shall be given by the service provider to all the eligible techno-commercially qualified bidders through an e-mail in advance at an appropriate time.

For Bharat Heavy Electricals Limited,

05/09/2024

D. N. MURTHY
Manager (OS)
Bharat Heavy Electricals Ltd
HPVP Visakhapatnam-530 0

Annexure - I

SCHEDULE OF QUANTITIES

Ref: OS/24-25/8055/Deaerators/16/015 **Date: 05.09.2024**

Sub: Fabrication of Deaerator Storage Tank, Heaters and Loose Items against S.O. 8055 at ADM site of BHEL- HPVP, Visakhapatnam

Sl. No.	S.O. No.	Description of Work	Unit	Qty.
		Fabrication of Deaerator Storage Tank in 3 sections, Heaters and Loose Items as per the Drawings, Specifications, QAP & WPS with free issue materials / items. The detailed scope of work is mentioned in the tender.		
1	**8055**	**Deaerator Storage Tank in 3 sections, Heaters and Loose Items as detailed at Annexure-II**	MT	277
		TOTAL	**MT**	**277**

Notes :

1) **L1 status shall be evaluated based on the total quoted value.**
2) The quoted price shall be inclusive of all applicable taxes & duties except GST. Income Tax shall be deducted at applicable rates from Bills and GST shall be reimbursable to the vendor as per applicable guidelines.
3) The prices shall be fixed & firm without any escalation during the entire period of contract and till completion of work.
4) The quantity indicated above is tentative and may vary subject to the requirement at the time of ordering / execution. However, payment shall be made for the actual quantity only.
5) The bidders are advised to go through all the drawings & documents before quoting the tender.
6) The evaluation currency for this tender shall be **INR**.

Signature of the Bidder with stamp

Annexure - II

Tender Enquiry ref: OS/24-25/8055/Deaerators/16/015 **Date: 05.09.2024**

DETAILS OF EQUIPMENTS TO BE FABRICATED

Sub: Fabrication of Deaerator Storage Tank, Heaters and Loose Items against S.O. 8055 at ADM site of BHEL-HPVP, Visakhapatnam

Sl. No.	S.O. No.	PGMA	Description of Item	Approx. Wt.	Unit	GA Drawing / Rev. No. (Tentative)
1	8055	02-000	Deaerator Heater	52.2	MT	3-163-16-11742, REV.0
2	8055	03-000	Loose Items	4.1	MT	
3	8055	04-000	Deaerator Storage Tank in 3 sections	164	MT	1-163-11-11426, REV.0 1-163-11-11427, REV.0 3-163-11-12033, Rev.0
4	8055	05-000	Deaerator Heater	52.2	MT	3-163-16-11742, REV.0
5	8055	06-000	Loose Items	4.1	MT	
			Total	**277**	**MT**	

Note : The above weights are approximate and may vary as per the drawings issued at the time of order / during execution.

ANNEXURE - III

GENERAL TERMS & CONDITIONS

1. **TECHNICAL DELIVERY CONDITIONS:**

   The work should conform to the technical data given in our drawings, GMS, Shipping List Specifications, QAP, WPS etc.

2. **PARTY'S SCOPE:**

   The scope of the party shall be as follows: -

   a) All welding equipments, baking oven, tools, jigs and fixtures, measuring instruments duly calibrated, handling facilities, testing facilities etc.

   b) All materials other than those mentioned under “Free Issue Materials", which are required for completion of the work.

   c) All consumables such as electrodes, gases, grinding wheels etc.

   Note: Electrodes of specification mentioned in the drawings / WPS and of BHEL approved brands only shall be used and MTCs of the same shall be submitted to BHEL for verification before use.

3. **REVISION OF DRAWINGS:**

   There may be minor changes in the drawings during execution. In such a case, party should accommodate the same without any extra claim.

4. **WELDING QUALIFICATION:** Qualification of required number of Welders is party’s responsibility at their cost.

5. **X–RAY:**

   All welding shall be of X-ray quality where specified on drawings. Inspection would specify the quantum of X-ray based on drawings / code requirement. Party should strictly follow the WPS and QAP issued by BHEL during welding. Getting the welds radiographed and getting them cleared by inspection is the responsibility of the party.

6. **RECTIFICATIONS / REJECTIONS:**

   Any rectification due to defective work, if required, shall be done by the party free of charge with a suitable technology approved before hand by BHEL in writing. The cost of material, if any used for rectification work / rejection work, will be estimated by BHEL and the same shall be debited to party's account. In case any rectification / rework is to be carried out due to defective material supplied by BHEL, the replacement material and consumables will be supplied by BHEL free of Cost.

7. **SECURITY DEPOSIT:**

   a) Vendors shall have to submit a Bank Guarantee for **10%** of the order value in case of **HPVP ADM / Lovagarden site** (or) **25%** of the material cost in case of Vendor works towards Security Deposit and safe custody of free issue materials within 15 days from the date of intimation by Outsourcing dept. The BG shall be valid for the contract period with a claim period of 12 months. This Bank Guarantee shall be released to the contractor after completion of work and on acceptance of the same by BHEL / Owner.
   Bidder agrees to submit performance security required for execution of the contract within the time period mentioned above. In case of delay in submission of performance security, enhanced performance security which would include interest (SBI rate + 6%) for the delayed period, shall be submitted by the bidder. Further, if performance security is not submitted till such time the first bill becomes due, the amount of performance security due shall be recovered as per terms defined in NIT/contract, from the bills along with due interest.

   b) **MODE OF DEPOSIT:** Security Deposit may be furnished in the following forms:

      i) Local cheques of Scheduled Banks (subject to realization)/ Pay Order/ Demand Draft/ Electronic Fund Transfer in favour of BHEL.
      ii) Bank Guarantee from Scheduled Banks / Public Financial Institutions as defined in the Companies Act. The Bank Guarantee format should have the approval of BHEL.
      iii) Fixed Deposit Receipt issued by Scheduled Banks / Public Financial Institutions as defined in the Companies Act (FDR should be in the name of the Contractor, a/c BHEL).
      iv) Securities available from Indian Post offices such as National Savings Certificates, Kisan Vikas Patras etc. (held in the name of Contractor furnishing the security and duly endorsed/ hypothecated/ pledged, as applicable, in favour of BHEL).
      v) Insurance Surety Bond.

   (Note: BHEL will not be liable or responsible in any manner for the collection of interest or renewal of the documents or in any other matter connected therewith).

Contd…2

8. **PERFORMANCE BANK GUARANTEE:**

Vendors shall have to submit Performance Bank Guarantee (claim period of 12 months) for 10% of the order value covering for the defects liability period. If PBG is not submitted, 10% of the order value shall be deducted towards PBG from the final bill and shall be refundable after performance guarantee period, if no defects are found during this period.

9. **RAW MATERIALS ISSUE**:

Raw materials shall be issued with appropriate processing allowance and invisible wastage over the theoretical requirement of raw materials **(Plates, Sheets, Sections and Pipes).**

10. **TRANSFER / RETURN OF LEFT-OVER MATERIALS:**

Party should maintain proper records for receipt & use of all free issue materials. The left-over materials & scrap as per the material accounting statement shall be returned to HPVP stores along with finished job. Material Transfer Vouchers (MTV) from one order to another or from one vendor to another and Material Return Vouchers should be submitted immediately after transfer / return. The material reconciliation statement shall be submitted by the contractor after verification and certification by BHEL along with the final bill **within 30 days from the date of completion of work**. Otherwise, recovery for the balance materials shall be made from any of their pending bills without further intimation.

11. **MATERIAL RECONCILIATION:**

Orders issued to the vendors have to be completed in all respects including Material Accounting within a maximum of **180 days** from the **date of issue of material** from BHEL - HPVP stores.

Maximum of 0.5 % on the requirement of materials **(Plates, Sections and Pipes)** is admitted towards **process allowance and invisible wastage**.

Scrap quantity is permissible up to a **maximum of 1% on Structurals (Beams, Channels, Angles, Rods, Pipes etc.), 2% on Sheets, 3% for Plates** on the theoretical requirement of materials.

If wastage and scrap is beyond the above limits, it should be fully justified with cutting diagrams etc. which are to be approved in advance by BHEL. **Otherwise, the cost of raw materials beyond approved limits will be recovered from the contractor as per BHEL recovery rates including applicable taxes & duties**.

Material reconciliation including return of balance materials, off-cuts is to be completed within 20 days from the date of completion of the order. The material reconciliation statement shall be submitted by the contractor after verification and certification by BHEL-HPVP along with the final bill **within 30 days from the date of completion of work**. Otherwise, recovery for the balance materials shall be made from any of their pending bills without further intimation,

Repeated occurrence of inordinate delays in returning and settling the material accounting will entail BHEL the right to terminate the contract forthwith or impose a temporary suspension on further loading at the discretion of BHEL.

12. **SCRAP & OFF-CUT NORMS:**

Sl. No.	Description	Scrap Size (in mm)	Off-Cut (in MM)
1.	CS/AS Sheets & Plates	Below 500 × 250	500 × 250 & above
2.	Rolled sections Rod, angles etc. (other than -tubes, pipes)	Below 1000	1000 & above
3.	Tubes & Pipes	Below 500	500 & above
4.	Universal column	Below 1000	1000 & Above
5.	SS Sheets & Plates	Below 500 × 250	500 × 250 & above
6.	SS Structural, Rods, Tubes, Pipes	Below 250	250 & above
7.	Non – ferrous: sheets & plates, rods & tubes	Below 500 × 250 (S & PL), Below 250 (Rods & Tubes)	500 × 250 & above, 250 & above
8.	Big size Scrap	(2500 & above) × (150 to 249)	-

13. **INSPECTION:**

Party shall contact our Quality Control Dept. for stages of inspection before commencement of job and should strictly follow the stages of inspection as per QAP.

Contd…3

14. WORKMANSHIP GUARANTEE:

The vendors should give workmanship guarantee for fabricated items for a period of 18 months from the date of last delivery of the order. Any defects due to incomplete work, faulty workmanship found in the fabricated items after delivery during the defects liability period shall be rectified / replaced by the vendor free of cost. Otherwise, the expenditure incurred towards the same will be recovered from the pending bills of vendors.

15. WORK PROGRESS:

The fabricator shall furnish a weekly report on the progress of work along with the status of availability of free issue materials and requirement of further materials, if any.

Outsourcing dept. personnel will visit vendor's works from time to time to assess and review the work progress. Free access shall be provided to BHEL or its inspection agency at all reasonable times of the day / night.

In case the progress is not satisfactory or supplies are delayed abnormally beyond the contractual delivery date, BHEL-HPVP, Visakhapatnam reserves the right to cancel the order in part or full or get the balance job in as is where is condition completed elsewhere by another agency at the risk and cost of Fabricator. The value of the work carried out by the party will be assessed by BHEL and the same shall be final. No compensation will be given to the fabricator in case of cancellation of order or diversion of balance job even if the jobs have been processed partly.

16. DELIVERY:

Finished items should be handed over to BHEL-HPVP on party's delivery challans along with Job completion certificate / Final Inspection Report from inspection agency / HPVP-QC department.

17. PENALTY:

Penalty calculations will be done on DU wise (Dispatchable Unit) delivery. If delivery exceeds the stipulated delivery schedule, penalty @ 1/2 % of the value of each DU per week (or) part thereof subject to a maximum of 10% of the value of each DU will be levied. However, time taken for the following will not be considered as delay on the part of the Sub-Contractor.

1) Intermediate operations, if any, carried out by BHEL.
2) Waiting time for BHEL / Third party Inspection beyond a normal time of 3 days.

18. PAYMENT TERMS:

Payment shall be made against RA Bills within 45 days for MSE (Micro & Small Enterprise), 60 days for Medium Enterprise and 90 days for non-MSEs from the date of submission of Bill.

90% payment will be made after handing over of the finished equipments along with all inspection documents to HPVP shops / Logistics dept. / ADM site / Lova Garden site, duly inspected & cleared by Inspection authority. Balance 10% payment shall be made along with the Final Bill against completion of total order in all respects including documentation.

Vendors shall have to submit the bills in the formats specified by HPVP-Outsourcing and the bills submitted in the specified format along with necessary supporting documents are only admitted for processing. The following documents shall be submitted along with the Final Bill: -

1. No Claim Certificate from the contractor
2. No Dues Certificate from BHEL
3. Work Completion Certificate from BHEL
4. Material Reconciliation Statement submitted by the Contractor and certified by concerned authority of BHEL (if applicable)
5. Workmanship Guarantee certificate from the contractor

19. SECRECY:

All the documents of BHEL inclusive of Drawings, GMS and Standards made available to the fabricator should be kept in strict confidence and under no circumstance be made available to others or allow others to make use of them. Such documents shall be returned to BHEL on demand after completion of the job. This secrecy clause is binding on the employees of the fabricators also. Violation of the same may lead to suspension of business with the vendor and necessary legal action.

20. SUB-LETTING:

In general, sub-letting of jobs will not be permitted. But in special circumstances, this may be allowed. In such case, the party should obtain written approval from BHEL-HPVP, Visakhapatnam before sub-letting.

Contd…4

21. FACTORY RULES AND REGULATIONS:

Party shall abide by all the rules and statutory regulations in force from time to time as per factories act. It shall be party's responsibility to ensure the safety of their workmen and fulfilling the ESI, PF and other relevant statutory regulations.

22. SAFETY:

a) Contractor shall adhere to safe construction practices, guard against hazardous & unsafe working conditions and shall comply with the safety rules of BHEL and local authorities. He shall maintain First Aid facilities for all his employees and labour. Contractor's responsibility includes supply of welder kit, all safety items such as safety belts, white and colour glasses, goggles, safety helmets, safety shoes etc.

b) Contractor and his employees shall follow all fire & safety, security regulations of BHEL.

23. HOUSE KEEPING:

During execution of work, the contractor at all times keep the working place and storage area clean and free from accumulation of waste materials, rubbish etc.,

24. ACCIDENT / DAMAGE / CONDUCT ETC.:

Contractor will be held responsible for any disorderly conduct / misconduct, indiscipline, theft, smoking etc., on the part of his men. He will ensure summarily eviction of such men from his premises failing which BHEL would remove them from the factory on his responsibility. Any damage to and or loss of equipment, machinery, building etc., to BHEL or BHEL employees, visitors or other contractors resulting from his own or any of his men's negligence shall be liable to be made good by him. Contractor shall be solely responsible for any accident in which you or your men or your equipment may be involved during the execution of contract on account of any reason what so ever.

25. TERMINATION OF CONTRACT:

In the event of any failure on the part of the contractor, BHEL reserves the right to terminate the contract by giving a notice of 2 weeks for any of the following lapses and contractual violations: -

a) Failure to make labour payments in time as per the rules
b) Failure to progress the job according to the agreed schedule
c) Failure to mobilize adequate man power, tools & tackles and consumables in time
d) Failure to adhere to Quality Standards of BHEL
e) Refused to co-operate with other agencies working in the same area
f) Failure to resolve labour disputes like strikes etc., within 7 days of occurrence
g) Failure to comply with statutory regulations applicable at BHEL

BHEL shall also be free to intervene and take necessary remedial measures. All costs incurred with interest and overheads shall be recovered from contractor by such foreclosing or off-loading any part of the contract work.

26. CONFLICT OF INTEREST AMONG BIDDERS / AGENTS:

A bidder shall not have conflict of interest with other bidders. Such conflict of interest can lead to anti-competitive practices to the detriment of Procuring Entity's interests. ***The bidder found to have a conflict of interest shall be disqualified.*** A bidder may be considered to have a confiict of interest with one or more parties in this bidding process, if:

a) they have controlling partner (s) in common; **or**

b) they receive or have received any direct or indirect subsidy / financial stake from any of them; or

c) they have the same legal representative / agent for purposes of this bid; **or**

d) they have relationship with each other, directly or through common third parties, that puts them in a position to have access to information about or influence on the bid of another Bidder; **or**

e) Bidder participates in more than one bid in this bidding process. Participation by a Bidder in more than one Bid will result in the disqualification of all bids in which the parties are involved. However, this does not limit the inclusion of the components/ sub-assembly/ Assemblies from one bidding manufacturer in more than one bid; **or**

f) In cases of agents quoting in offshore procurements, on behalf of their principal manufacturers, one agent cannot represent two manufacturers or quote on their behalf in a particular tender enquiry. One manufacturer can also authorise only one agent / dealer. There can be only one bid from the following:

1. The principal manufacturer directly or through one Indian agent on his behalf, and
2. Indian/foreign agent on behalf of only one principal,

g) A Bidder or any of its affiliates participated as a consultant in the preparation of the design or technical specifications of the contract that is the subject of the Bid, or

h) In case of a holding company having more than one independently manufacturing units, or more than one unit having common business ownership/management, only one unit should quote. Similar restrictions would apply to closely related sister companies. Bidders must proactively declare such sisters' common business/ management units in same/ similar line of business"

Contd…5

27. OVER RUN COMPENSATION (ORC) / IDLE CHARGES:

The contractor shall not be entitled to claim and the company shall not be liable to pay any amount on account of overrun compensation and idle charges, the overrun/ idling may be for whatsoever reasons.

28. DISPUTES:

Head of BHEL- HPVP Unit will be the final authority for any disputes arising out of this contract. The disputes / arbitration / settlement of contractual or legal issues shall be under the Jurisdiction of Visakhapatnam Court.

29. For this procurement, Public Procurement (Preference to Make in India), Order 2017 dated 15.06.2017 & 28.05.2018 and subsequent Orders issued by the respective Nodal Ministry shall be applicable even if issued after issue of this NIT but before finalization of Contract / PO / WO against this NIT.

In the event of any Nodal Ministry prescribing higher or lower percentage of purchase preference and / or local content in respect of this procurement, same shall be applicable**.**

30. The Bidder declares that they will not enter into any illegal or undisclosed agreement or understanding, whether formal or informal with other Bidder(s). This applies in particular to prices, specifications, certifications, subsidiary contracts, submission or non-submission of bids or any other actions to restrict competitiveness or to introduce cartelization in the bidding process.

In case, the Bidder is found having indulged in above activities, suitable action shall be taken by BHEL as per extant policies/ guidelines.

31. Order Acceptance:

If the order acceptance is not received within 03 days from the date of release of Sub-contract order, it shall be assumed that the same has been accepted by you thereof.

Signature of the bidder with Stamp

Annexure – IV

Ref: OS/24-25/8055/Deaerators/16/015 Date: 05.09.2024

Acceptance to Tender Terms & Conditions

I / We hereby confirm that the Tender documents, Drawings, Quality documents etc. have been studied in detail and we have fully understood the scope of work.

I / We accept to all the Terms and Conditions of the Tender Enquiry without any deviations and the prices quoted are in accordance with the same.

I / We give our acceptance to participate in reverse auction for this tender.

Tender documents duly signed on all the pages by the Owner / authorized representative of the bidder are attached herewith.

Signature of the bidder with Stamp

ANNEXURE – V

Ref: OS/24-25/8055/Deaerators/16/015 Date: 05.09.2024

BUSINESS RULES FOR REVERSE AUCTION (RA)

This has reference to tender no. **OS/24-25/8055/Deaerators/16/015, dated 05.09.2024**. BHEL shall finalise the Rates for **Fabrication of Deaerator Storage Tank, Heaters and Loose Items against S.O. 8055 at ADM site of BHEL- HPVP, Visakhapatnam** through Reverse Auction mode. BHEL has made arrangement with an authorized Service provider (details will be shared before reverse auction) for conducting RA. Bidders should go through the instructions given below and submit acceptance of the same.

The technical & commercial terms are as per (a) BHEL Tender Enquiry No. **OS/24-25/8055/Deaerators/16/015, dated 05.09.2024**, (b) Bidders' technical & commercial bid (in case of two-part bid) and (c) subsequent correspondences between BHEL and the bidders, if any.

1. **Procedure of Reverse Auctioning:**
   i) Price bids of all techno-commercially qualified bidders shall be opened.
   ii) **Reverse Auction**: The 'bid decrement' will be decided by BHEL.
   iii) The lowest bidder in sealed envelope price bid shall be shown as current L1 automatically by the system and no acceptance of that price is required. System shall have the provision to indicate this bid as current L1.
   iv) Bidders by offering a minimum bid decrement or the multiples thereof can displace a standing lowest bid and become "L1" and this continues as an iterative process. However, no bidder shall be allowed to lower its bid below the current L1 by more than 5 decrements at one go.
   v) After the completion of the reverse auction, the Closing Price shall be available for further processing.
   vi) Wherever the evaluation is done on total cost basis, after Reverse Auction, prices of individual line items shall be reduced on pro-rata basis.

2. **Schedule for reverse auction:** The Reverse Auction schedule will be intimated to the techno-commercially qualified bidders at a later stage.

3. **Auction extension time:** If a bidder places a bid in the last {…} minutes of closing of the Reverse Auction and if that bid gets accepted, then the auction's duration shall get extended automatically for another {…} minutes, for the entire auction (i.e. for all the items in the auction), from the time that bid comes in. Please note that the auto-extension will take place only if a bid comes in those last {…} minutes and if that bid gets accepted as the lowest bid. If the bid does not get accepted as the lowest bid, the auto-extension will not take place even if that bid might have come in the last {…} minutes. In case, there is no bid in the last {…} minutes of closing of Reverse Auction, the auction shall get closed automatically without any extension. However, bidders are advised not to wait till the last minute or last few seconds to enter their bid during the auto-extension period to avoid complications related with internet connectivity, network problems, system crash down, power failure, etc.
   The above process will continue till completion of Reverse Auction.
   Complaints/ Grievances, if any, regarding denial of service or any related issue should be given in writing thru e-mail/ fax to M/s. {Service provider} with a copy to BHEL within 15 minutes prior to initial closing time of Reverse Auction.

4. **Bid price:** The Bidder has to quote the {……} Price inclusive of Packing & Forwarding charges, all the routine & type tests as per tender scope, taxes, duties, freight and insurance as specified in tender document including loading (if indicated by BHEL due to deviations in technical/ commercial terms) for the Items specified. Details are as shown in Excel Sheet for calculation of total cost to BHEL (To be specified by Unit as per NIT conditions).

5. **Bidding currency and unit of measurement:** Bidding will be conducted in *Indian Rupees* per *Unit* of the material as per the specifications mentioned in the tender.
   In case of foreign currency bids, exchange rate (TT selling rate of State Bank of India) as on scheduled date of tender opening (Part-I bid) shall be considered for conversion in Indian Rupees. If the relevant day happens to be a Bank holiday, then the forex rate as on the previous bank (SBI) working day shall be taken.

6. **Validity of bids:** Price shall be valid for 90 days from the date of reverse auction. These shall not be subjected to any change whatsoever.

7. **Lowest bid of a bidder**: In case the bidder submits more than one bid, the lowest bid at the end of Reverse Auction will be considered as the bidder's final offer to execute the work.

8. Unique user IDs shall be used by bidders during bidding process. All bids made from the Login ID given to the bidders will be deemed to have been made by the bidders/ bidders' company.

9. **Post auction procedure**: BHEL will proceed with the Lowest Bid in the Reverse Auction for further processing.

10. Any commercial/ technical loading shall be separately intimated to respective bidders prior to RA. The excel sheet provided in this regard shall cover all these aspects. Commercial/ technical loading if any, shall be added by the respective bidder in its price during Reverse Auction.
    Modalities of loading & de-loading shall be separately intimated to the bidders. The responsibility for correctness of total cost to BHEL shall lie with the bidders.

11. Reverse auction shall be conducted by BHEL (through M/s {*Service Provider}*), on pre-specified date, while the bidders shall be quoting from their own offices/ place of their choice. Internet connectivity shall have to be ensured by bidders themselves.

    During the RA process if a bidder is not able to bid and requests for extension of time by FAX/ email/ phone then time extension of additional 15 minutes will be given by the service provider provided such requests come before 5 minutes of auction closing time. However, only one such request per bidder can be entertained.

    <u>In order to ward-off contingent situation of connectivity failure bidders are requested to make all the necessary arrangements/ alternatives whatever required so that they are able to circumvent such situation and still be able to participate in the reverse auction successfully. Failure of power or loss of connectivity at the premises of bidders during the Reverse auction cannot be the cause for not participating in the reverse auction. On account of this, the time for the auction cannot be extended and neither BHEL nor M/s. {*Service provider*} is responsible for such eventualities.</u>

12. Proxy bids: Proxy bidding feature is a pro-bidder feature to safe guard the bidder's interest of any internet failure or to avoid last minute rush. The proxy feature allows bidders to place an automated bid in the system directly in an auction and bid without having to enter a new amount each time a competing bidder submits a new offer. The bid amount that a bidder enters is the minimum that the bidder is willing to offer. Here the software bids on behalf of the bidder. This obviates the need for the bidder participating in the bidding process until the proxy bid amount is decrementally reached by other bidders. When proxy bid amount is reached, the bidder (who has submitted the proxy bid) has an option to start participating in the bidding process.

    The proxy amount is the minimum amount that the bidder is willing to offer. During the course of bidding, the bidder cannot delete or change the amount of a proxy bid.

    Bids are submitted in decrements (decreasing bid amounts). The application automates proxy bidding by processing proxy bids automatically, according to the decrement that the auction originator originally established when creating the auction, submitting offers to the next bid decrement each time a competing bidder bids, regardless of the fact whether the competing bids are submitted as proxy or standard bids. However, it may please be noted that if a manual bid and proxy bid are submitted at the same instant manual bid will be recognized as the L1 at that instant.

    In case of more than one proxy bid, the system shall bid till it crosses the threshold value of 'each lowest proxy bid' and thereafter allow the competition to decide the final L1 price.

    Proxy bids are fed into the system directly by the respective bidders. As such this information is privy only to the respective bidder(s).

13. Bidders are advised to get fully trained and clear all their doubts such as refreshing of Screen, quantity being auctioned, tender value being auctioned etc. from M/s. {*Service provider*}.

Ref: OS/24-25/8055/Deaerators/16/015 Date: 05.09.2024

14. M/s. {*Service provider}*, shall arrange to demonstrate/ train the bidder or bidder's nominated person(s), without any cost to bidders. M/s. {*Service provider}*, shall also explain the bidders, all the business rules related to the Reverse Auction. Bidders are required to submit their acceptance to the terms/ conditions/ modalities before participating in the Reverse Auction in the process compliance form as enclosed. Without this, the bidder will not be eligible to participate in the event.

15. Successful bidder shall be required to submit the final prices (L1) in prescribed format (Annexure – VI) for price breakup, quoted during the Reverse Auction, duly signed and stamped as token of acceptance without any new condition (other than those already agreed to before start of auction), after the completion of auction to M/s. {*Service provider*} besides BHEL within two working days of Auction without fail.

16. Any variation between the final bid value and that in the confirmatory signed price breakup document will be considered as tampering the tender process and will invite action by BHEL as per extant guidelines for suspension of business dealings (as available on www.bhel.com).

17. Bidders' bid will be taken as an offer to execute the work/ supplies the item as per enquiry no. **OS/24-25/8055/Deaerators/16/015, dated 05.09.2024.** Bids once made by the bidder, cannot be cancelled/ withdrawn and bidder shall be bound to execute the work as mentioned above at bidder's final bid price. Should bidder back out and not execute the contract as per the rates quoted, BHEL shall take action as per extant guidelines for suspension of business dealings (as available on www.bhel.com).

18. Bidders shall be able to view the following on their screen along with the necessary fields during Reverse Auction:
a. Leading (Running Lowest) Bid in the Auction (only total price of package)
b. Bid Placed by the bidder
c. Start Price
d. Decrement value
e. Rank of their own bid during bidding as well as at the close of auction.

19. BHEL's decision on award of contract shall be final and binding on all the Bidders.

20. BHEL reserves the right to extend, reschedule or cancel the Reverse Auction process at any time, before ordering, without assigning any reason, with intimation to bidders.

21. BHEL shall not have any liability to bidders for any interruption or delay in access to the site irrespective of the cause. In such cases, the decision of BHEL shall be binding on the bidders.

22. Other terms and conditions shall be as per bidder's techno-commercial offers and other correspondences, if any, till date.

23. If there is any clash between this business document and the FAQ available, if any, in the website of M/s. {*Service provider},* the terms & conditions given in this business document will supersede the information contained in the FAQs. Any changes made by BHEL/ service provider (due to unforeseen contingencies) after the first posting shall be deemed to have been accepted if the bidder continues to access the portal after that time.

24. Bidder shall not divulge either his Bids or any other exclusive details of BHEL to any other party. If the Bidder or any of his representatives are found to be involved in Price manipulation/ cartel formation of any kind, directly or indirectly by communicating with other bidders, action *as per extant BHEL guidelines for suspension of business dealings (as available on www.bhel.com)*, shall be initiated by BHEL.

Signature of the Bidder with Stamp

Annexure – GST

GST COMPLIANCE FOR INDIGENOUS SUPPLIERS

1. In Response to Tenders for Indigenous supplier will be entertained only if the vendor has a valid GSTIN which should be clearly mentioned in the offer. If any specific exemption is available, a declaration with due supporting documents need to be furnished for considering the offer.
2. Supplier shall mention their GSTIN in all their invoices and invoices shall be in the format as specified/prescribed under GST laws. Invoices shall necessarily contain Invoice number (in case of multiple numbering system is being followed for billing like SAP invoice no, commercial invoice no etc., then the Invoice No which is linked/uploaded in GSTN network shall be clearly indicated), item description as per PO, Quantity, Rate, Value, applicable taxes with nomenclature (like IGST, SGST, CGST & UTGST) separately, HSN/ SAC Code, etc.
3. All invoices shall bear the HSN Code for each item separately (Harmonized System of Nomenclature)/ SAC code (Services Accounting Code).
4. A declaration to the effect that all invoice particulars are/were uploaded in the GSTN network/ portal & all tax liability as per GST rules and regulations have been and will be discharged, shall be mentioned in the invoice. If not mentioned in the invoice, a separate declaration shall be submitted as per the requirement of BHEL.
5. All documents like Test Certificate, LR copy, Guarantee/Warrantee certificate, work completion certificate, any other document mentioned in PO, shall be sent along with the vehicle/consignment where ever applicable. For all consignments received within the calendar month, input credit will be availed within that month in line with monthly returns filing cycle. In case of any discrepancy in the document or non-submission of documents mentioned in the PO, then BHEL will not be able to accept or account the material, in such case availing of tax credit will be deferred to next month or so.
6. In case of discrepancy in the data uploaded by supplier in the GSTN portal or in case of any shortages or rejection in the supply, then BHEL will not be able to avail the tax credit and will notify the supplier of the same. Supplier has to rectify the data discrepancy in the GSTN portal or issue credit note (details to be uploaded in GSTN portal) for the shortages or rejections in the suppliers, within the calendar month notified by BHEL.
7. For any such delay in availing of tax credit for reasons attributable to supplier (as mentioned above), interest (calculated @ SBI Base Rate + 6%) along with penalty if any will be deducted for the delayed period i.e. from the month of receipt till the month tax credit is availed, from the running bills.
8. Under GST regime, BHEL has to discharge GST liability on LD recovered from suppliers/contractors. Hence applicable GST shall also be recoverable from suppliers/contractors on LD amount. For this Debit note will be issued by BHEL indicating the respective supply invoice number.
9. This is to inform that GST portion of invoice, shall be released only upon Vendor declaring such invoice in his GSTR-1 and receipt of goods and Tax invoice by BHEL and Confirmation of payment of GST thereon by vendor on GSTN portal. Alternatively, BG of appropriate value may be obtained from vendor which shall be valid At least one month after the confirmation of date of payment of GST by vendor on GSTN portal and receipt of Tax invoice and receipt of goods, whichever is later. Above is subject to receipt of goods/service and tax invoice thereof along with vendor declaring invoice in his return and paying GST within timeline prescribed for availing ITC by BHEL.
10. That in case vendor delays Declaring such invoice in his return and GST credit availed by BHEL is denied or reversed subsequently as per GST law, GST amount paid by BHEL towards such ITC reversal as per GST law shall be recoverable from vendor/contractor along with interest levied/ leviable on BHEL.

Note: The above will be followed strictly for processing vendor payments to ensure GST Compliance.

Signature of the Bidder with Stamp

HYDERABAD	CUSTOMER/CONSULTANT ADDENDA TO STANDARD MANUFACTURING QUALITY PLAN		
	CUSTOMER: M/s Damodar Valley Corporation (DVC)	**PROJECT:** Raghunathpur, Purulia, West Bengal	**ITEM:** Deaerator
	SALE ORDER NO. MPA1035001 & MPA1032002	WORK ORDER NO.: 1-0-324-120 to 121-00	
	ADDENDA REF NO: HYQA/S**SMQP/HE/426/4661**	ADDENDA REV. NO: 01	DATE: 22/07/2013 **Page 1 of 1**
	STD.MFG.QP NO : HYQA/HE/SQP/500/01	STD.MFG.QP REV.NO: 03	DATE: 22/07/2013

PROJECT DATA :

Consultant :	--
Customer Nominated Inspection agency :	NA
BHEL appointed Customer Nominated Inspection agency :	NA
Any other identification by Customer/Consultant :	NA
Quality documentation Package submission :	2 sets of hard copy and 2 sets of soft copy in a CD

HISTORY OF ADDENDA REVISIONS :

Addenda Rev. no.	Description	Date
00	First Issue	25/01/2013
01	Second Issue	22/07/2013

ADDENDA TO STANDARD MANUFACTURING QUALITY PLAN :

S No.	Name of Part /Assembly	Stages	Requirements by Customer/Consultant
ADDENDA TO NOTES/REMARKS : NONE			

APPROVED UNDER CAT-I

Digitally signed by S P Patra
DN: cn=S P Patra, o=DVC, ou=Engineering and Planning, email=shyama.patra@dvc.gov.in, c=IN
Date: 2013.08.06 17:06:54 +05'30'

LEGEND: * RECORDS IDENTIFIED WITH TICK SHALL BE ESSENTIALLY INCLUDED BY CONTRACTOR IN QA DOCUMENTATION. M: BHEL /BHEL VENDOR B : BHEL QC /BHEL NOMINATED INSPECTION AGENCY C: CUSTOMER / CUSTOMER NOMINATED INSPECTION AGENCY "P" PERFORM "W" WITNESS AND "V" VERIFICATION OF DOCUMENTS	**G.T.S.K DAKSHINA MURTHY** **ENGINEER/QA/BHEL**	**CUSTOMER/CONSULTANT**

Find attached to this sheet BHEL Standard Manufacturing Quality Plan, the reference of which is given in the Header. BHEL and BHEL Customer quality requirements as given in the addenda are additional to that were given in the referred BHEL SMQP, and these will prevail over in case of any inconsistency between the two.

HYQA/CA/SMQP REV.01

	BHARAT HEAVY ELECTRICALS LIMITED R.C.PURAM, HYDERABAD	STANDARD QUALITY PLAN	QP No: HYQA/HE/SQP/500/01	REVISION: 03
		ITEM: DEAERATOR HEATER & STORAGE TANK TYPE: 660MW	SHEET 1 of 7	DATE: 22.07.2013

SL. No.	COMPONENT & OPERATIONS	CHARACTERISTICS	Class	Type of Check	QUANTUM OF CHECK	REFERENCE DOCUMENT	ACCEPTANCE NORMS	FORMAT OF RECORD	* D	AGENCY M	B	C	REMARKS
1.0	**MATERIAL**												
1.1	**At suppliers Works**												
1.1.1	Shell Plates & Plates for Dished Ends	a. Chemical Composition	Critical	Chem.	1 / Heat	SA 516 GR. 70 With S1, S5 & S8	SA 516 GR. 70 With S1, S5 & S8	Supplier's TC	✓	P			
		b. Mechanical Properties	Critical	Mech.	1 / Heat	SA 516 GR. 70 With S1, S5 & S8	SA 516 GR. 70 With S1, S5 & S8	Supplier's TC	✓	P			
		c. UT Exam. as per Drg.	Critical	NDE	100%	SA 435	SA 435	Supplier's TC	✓	P			
		d. Dimensional Examination	Major	Measrt.	100%	SA 516 GR. 70	SA 516 GR. 70	Supplier's TC		P			
1.2	**At BHEL**												
1.2.1	Shell Plates & Plates for Dished Ends & Pads	a. Verification of material TC	Major	Visual	100%	SA 516 GR. 70 With S1, S5 & S8	SA 516 GR. 70 With S1, S5 & S8	Insp. Record			P	V	
		b. Dimensional Conformity	Major	Measrt.	100%	SA 516 GR. 70	SA 516 GR. 70	Insp. Record			P		
		c. Surface Examination	Major	Visual	100%	No Pitting	No Pitting	Insp. Record			P		
1.2.2	Pipes	Verification of material TC & Surface exam.	Major	Visual	100%	SA 106 GR. B	SA 106 GR. B	Insp. Record	✓		P	V	
1.2.3	Flanges	Verification of material TC, Dim. & Surface exam.	Major	Visual	100%	SA 105	SA 105	Insp. Record	✓		P		

LEGEND:
M: MANUFACTURER / VENDOR B: BHEL /NOMMNATED INSPECTION AGENCY, C: CUSTOMER / CUSTOMER NOMINATED INSPECTION AGENCY. P: PEROFM, W: WITNESS V: VERFICATION, * D: RECORDS IDENTIFIED WITH (4) SHALL BE ESSENTIALLY INCLUDED IN QA DOCUMENTATION.
REFER SEPARATE ADDENDA SHEET FOR PROJECT/CUSTOMER SPECIFIC REQUIREMENTS

Prepared by :	Approved by:
G.T.S.K Dakshina Murthy ENGINEER / QA	Y.C.Venkateswara Rao SR.DGM/QA

	BHARAT HEAVY ELECTRICALS LIMITED R.C.PURAM, HYDERABAD	STANDARD QUALITY PLAN	QP No: HYQA/HE/SQP/500/01	REVISION: 03
		ITEM: DEAERATOR HEATER & STORAGE TANK TYPE: 660MW	SHEET 2 of 7	DATE: 22.07.2013

SL. No.	COMPONENT & OPERATIONS	CHARACTERISTICS	Class	Type of Check	QUANTUM OF CHECK	REFERENCE DOCUMENT	ACCEPTANCE NORMS	FORMAT OF RECORD	* D	AGENCY M	AGENCY B	AGENCY C	REMARKS
1.2.4	Tray Assemblies	Verification of material TC with PO Spn.	Major	Visual	100%	As per Mfgr. Specn.	As per Mfgr. Specn.	Certific. of Compliance	✓		P		For indigenous sources separate QP shall be referred
1.2.5	Spray Valves	Verification of material TC with PO Spn	Major	Visual & Measrt.	100%	As per Mfgr. Specn.	As per Mfgr. Specn.	Certific. of Compliance	✓		P		
1.3	**Dished Ends (with single plate or Butt welded plates)**												
1.3.2	At dished end manufacturers works	a. Verification of material TC	Major	Visual	100%	SA 516 GR. 70 With S1, S5 & S8	SA 516 GR. 70 With S1, S5 & S8	Supplier's TC		P	V		
		b. RT of Butt welds before forming	Critical	NDE	100%	ASME Sec. V Art. 2	ASME Sec. VIII Div I UW51	Supplier's TC	✓	P	V		Review of RT Films
		c. Normalizing after forming	Critical	HT	100%	ASME Sec. VIII Div. 1 UCS 56	ASME Sec. VIII Div. 1 UCS 56	Supplier's TC	✓	P	V		
		d. UT on outer surface area after forming & HT	Critical	NDE	100%	SA 435	SA 435	Supplier's TC	✓	P	W		
		e. PT on entire outer surface including welds after forming & HT	Critical	NDE	100%	ASME Sec. V Art. 6	ASME Sec. VIII Appx. 8	Supplier's TC	✓	P	W		
		f. Tensile testing of production test coupon heat treated along with dished ends.	Critical	Visual	1 Per each D.E	SA 516 GR. 70	SA 516 GR. 70	Supplier's TC	✓	P	W		

LEGEND:
M: MANUFACTURER / VENDOR B: BHEL /NOMMNATED INSPECTION AGENCY, C: CUSTOMER / CUSTOMER NOMINATED INSPECTION AGENCY. P: PERORM, W: WITNESS V: VERFICATION, * D: RECORDS IDENTIFIED WITH (4) SHALL BE ESSENTIALLY INCLUDED IN QA DOCUMENTATION.
REFER SEPARATE ADDENDA SHEET FOR PROJECT/CUSTOMER SPECIFIC REQUIREMENTS

Prepared by :	Approved by:
G.T.S.K Dakshina Murthy ENGINEER / QA	Y.C.Venkateswara Rao SR.DGM/QA

	BHARAT HEAVY ELECTRICALS LIMITED R.C.PURAM, HYDERABAD	STANDARD QUALITY PLAN	QP No: HYQA/HE/SQP/500/01	REVISION: 03
		ITEM: DEAERATOR HEATER & STORAGE TANK TYPE: 660MW	SHEET 3 of 7	DATE: 22.07.2013

SL. No.	COMPONENT & OPERATIONS	CHARACTERISTICS	Class	Type of Check	QUANTUM OF CHECK	REFERENCE DOCUMENT	ACCEPTANCE NORMS	FORMAT OF RECORD	* D	AGENCY M	B	C	REMARKS
		g. Thickness measurement on knuckle portion.	Major	Measurt.	100%	Spec. / Drg.	Spec. / Drg.	Supplier's TC	✓	P	W		Measurt. by Dmeter
		h. Dimensional Conformity	Major	Measurt.	100%	Drawing	Drawing	Supplier's TC	✓	P	W		
1.3.2	At BHEL	a. Verification of matl. TC with Spec.	Major	Visual	100%	SA 516 GR. 70 & PO	SA 516 GR. 70 & PO	Insp. Record			P	V	
2.0	**IN PROCESS INSPECTION**												
2.1	Shell Fabrication at manufacturer's works including BHEL (Rev 03)	a. Transfer of identification marks and check for dimensions	Major	Visual	100%	TC & Drg.	TC & Drg.	Insp. Record		P	V	V	
		b. Surface exam. of plates after rolling & edge preparation	Major	Visual	100%	ASME Sec VIII Div. I	ASME Sec VIII Div. I	Insp. Record		P	V		
		c. Verification of approved WPS, PQR & WQR	Major	Visual	100%	As per ASME Sec. IX	As per ASME Sec. IX	Records		P	V	V	
		d. Fit up of L & C seams including shell to Dished end	Major	Measrt.	100%	Drg & ASME Sec. VIII Div. I	Drg & ASME Sec. VIII Div. I	Insp. Record		P	V	V	
		e. PT after back chip	Major	NDE	100%	ASME Sec. V ART.6	ASME Sec. VIII Div. 1 Appx.8	Insp. Record	✓	P	V	V	
		f. Identification of all welds (weld No. punched for correlation with welder)	Major	Visual	100%	-	-	Insp. Record		P	V	V	
		g. RT of weld	Critical	NDE	100%	ASME Sec. V Art. 2	ASME Sec. VIII Div.1 UW 51	Insp. Record	✓	P	V	V	
		h. PT exam. of L & C seams of the outer shell welds	Major	NDE	100%	ASME Sec. V Art. 6	ASME Sec. VIII Div. 1 Appx.8	Insp. Record	✓	P	V	V	

LEGEND:
M: MANUFACTURER / VENDOR B: BHEL /NOMMNATED INSPECTION AGENCY, C: CUSTOMER / CUSTOMER NOMINATED INSPECTION AGENCY. P: PERORM, W: WITNESS V: VERFICATION, * D: RECORDS IDENTIFIED WITH (4) SHALL BE ESSENTIALLY INCLUDED IN QA DOCUMENTATION.
REFER SEPARATE ADDENDA SHEET FOR PROJECT/CUSTOMER SPECIFIC REQUIREMENTS

Prepared by :	Approved by:
G.T.S.K Dakshina Murthy ENGINEER / QA	Y.C.Venkateswara Rao SR.DGM/QA

	BHARAT HEAVY ELECTRICALS LIMITED R.C.PURAM, HYDERABAD	STANDARD QUALITY PLAN	QP No: HYQA/HE/SQP/500/01	REVISION: 03
		ITEM: DEAERATOR HEATER & STORAGE TANK TYPE: 660MW	SHEET 4 of 7	DATE: 22.07.2013

SL. No.	COMPONENT & OPERATIONS	CHARACTERISTICS	Class	Type of Check	QUANTUM OF CHECK	REFERENCE DOCUMENT	ACCEPTANCE NORMS	FORMAT OF RECORD	* D	AGENCY M	AGENCY B	AGENCY C	REMARKS
		i. Dimensional Conformity including ovality	Major	Measrt.	100%	ASME Sec. VIII Div.1 & Drg.	ASME Sec. VIII Div.1 & Drg.	Insp. Record	✓	P	V	V	
2.2	**Nozzle Fabrication**												
2.2.1	Nozzle Fabrication with Plate Material (at sub supplier works)	a. Transfer of identification marks	Major	Visual	100%	TC	TC	Insp. Record		P	V	V	
		b. Fit up of 'L' seams	Major	Measrt.	100%	Drawing	Drawing	Insp. Record		P	V	V	
		c. PT after back chip	Major	NDE	100%	ASME Sec. V ART.6	ASME Sec. VIII Div. 1 Appx.8	Insp. Record	✓	P	V	V	
		d. RT of the above weld	Critical	NDE	100%	ASME Sec. V Art. 2	ASME Sec. VIII Div. I UW 51	Insp. Record	✓	P	V	V	
		e. Dimensional conformity	Major	Measrt.	100%	Drawing	Drawing	-		P	V	V	
2.2.2	Welding of Nozzles with shell	a. Check markings of nozzle openings prior to cutting	Major	Visual	100%	Drawing	Drawing	-		P	V		
		b. Transfer of identification marks on nozzles	Major	Visual	100%	TC	TC	Insp. Record		P	V	V	
		c. Fit up of Flange to pipe	Major	Measrt.	100%	Drawing	Drawing	Insp. Record		P	V	V	
		d. Nozzle to shell fit up	Major	Measrt.	100%	Drawing	Drawing	Insp. Record		P	V	V	
		e. Check for Dimn. conformity & visual exam of welds	Major	Measrt.	100%	Drawing	Drawing	Insp. Record		P	V	V	
		f. MT exam of nozzle to shell welds	Major	NDE	100%	ASME Sec. V Art.7	ASME Sec. VIII Appx. 6	Insp. Record		P	W	W	

LEGEND:
M: MANUFACTURER / VENDOR B: BHEL /NOMMNATED INSPECTION AGENCY, C: CUSTOMER / CUSTOMER NOMINATED INSPECTION AGENCY. P: PERORM, W: WITNESS V: VERFICATION, * D: RECORDS IDENTIFIED WITH (4) SHALL BE ESSENTIALLY INCLUDED IN QA DOCUMENTATION.
REFER SEPARATE ADDENDA SHEET FOR PROJECT/CUSTOMER SPECIFIC REQUIREMENTS

Prepared by :	Approved by:
G.T.S.K Dakshina Murthy ENGINEER / QA	Y.C.Venkateswara Rao SR.DGM/QA

	BHARAT HEAVY ELECTRICALS LIMITED R.C.PURAM, HYDERABAD	STANDARD QUALITY PLAN	QP No: HYQA/HE/SQP/500/01	REVISION: 03
		ITEM: DEAERATOR HEATER & STORAGE TANK TYPE: 660MW	SHEET 5 of 7	DATE: 22.07.2013

SL. No.	COMPONENT & OPERATIONS	CHARACTERISTICS	Class	Type of Check	QUANTUM OF CHECK	REFERENCE DOCUMENT	ACCEPTANCE NORMS	FORMAT OF RECORD	* D	AGENCY M	AGENCY B	AGENCY C	REMARKS
		g. Soap solution test of RF pads	Major	NDE	100%	HE 71022 / 01	HE 71022 / 01	Insp. Record		P	W	W	
2.3	Saddle Fabrication & internal support & Tray enclosures	a. Fit up of pads to shell	Major	Measrt.	100%	Drawing	Drawing	Insp. Record		P	V	V	
		b. Fit up of saddle to the shell	Major	Measrt.	100%	Drawing	Drawing	Insp. Record		P	V		
		c. Dim. exam. of external supports	Major	Measrt.	100%	Drawing	Drawing	Insp. Record		P	V	V	
		d. Fit up of internal connections	Major	Measrt.	100%	Drawing	Drawing	Insp. Record		P	V	V	
		e. Check for clearance / fit up of tray enclosures	Major	Measrt.	100%	Drawing	Drawing	Insp. Record		P	V	V	
		f. Visual exam. of all welds	Major	Visual	100%	ASME Sec. VIII Div. I	ASME Sec. VIII Div. I	Insp. Record		P	V	V	
		g. Visual & dimensional exam of tray enclosure	Major	Visual	100%	Drawing	Drawing	Insp. Record		P	V	V	
		h. PT exam of Pads & saddle support	Major	NDE	100%	ASME Sec. V Art. 6	ASME Sec. VIII Div.I Appx. 8	Insp. Record		P	W	V	
2.4	**FINAL INSPECTION**												
		a. Visual exam of all welds	Major	Visual	100%	ASME Sec. VIII Div. I	ASME Sec. VIII Div. I	Insp. Record		P	V	V	
		b. Check for fixing of spray valves & Stacking of tray assemblies	Major	Visual	100%	Procedure & Drg.	Procedure & Drg.	Insp. Record		P	V	W	
		c. Visual & Dimn. check of complete tray assemblies	Major	Measrt.	100%	Drawing	Drawing	Insp. Record		P	V	W	

LEGEND:
M: MANUFACTURER / VENDOR B: BHEL /NOMMNATED INSPECTION AGENCY, C: CUSTOMER / CUSTOMER NOMINATED INSPECTION AGENCY. P: PERORM, W: WITNESS V: VERFICATION, * D: RECORDS IDENTIFIED WITH (4) SHALL BE ESSENTIALLY INCLUDED IN QA DOCUMENTATION.
REFER SEPARATE ADDENDA SHEET FOR PROJECT/CUSTOMER SPECIFIC REQUIREMENTS

Prepared by :	Approved by:
G.T.S.K Dakshina Murthy ENGINEER / QA	Y.C.Venkateswara Rao SR.DGM/QA

	BHARAT HEAVY ELECTRICALS LIMITED R.C.PURAM, HYDERABAD	STANDARD QUALITY PLAN	QP No: HYQA/HE/SQP/500/01	REVISION: 03
		ITEM: DEAERATOR HEATER & STORAGE TANK TYPE: 660MW	SHEET 6 of 7	DATE: 22.07.2013

SL. No.	COMPONENT & OPERATIONS	CHARACTERISTICS	Class	Type of Check	QUANTUM OF CHECK	REFERENCE DOCUMENT	ACCEPTANCE NORMS	FORMAT OF RECORD	* D	AGENCY M	B	C	REMARKS
		d. Check inter connecting nozzles of FST and Deaerator Heater with fixture	Major	Visual	100%	Drawing	Drawing	Insp. Record	✓	P	V	W	
		e. Hydro Test of Deaerator Heater	Major	Visual	100%	HY0852061 Rev 03 & Drg.	HY0852061 Rev 03 & Drg.	Hydrostatic Test Report	✓	P	V	W	CHP
		f. Drying after Hydro Test	Major	Visual	100%	HY0852061 Rev 03 & Drg.	HY0852061 Rev 03 & Drg.	Insp. Record	✓	P	V	V	
3.0	**PRE-DESPATCH INSPECTION**												
		a. Dimensional inspection of Deaerator Heater & Feed Storage Tank sections	Major	Visual	100%	Drawing	Drawing	As built Drg.	✓	P	V	V	
		b. Match marking of storage tank sections	Major	Visual & Measrt.	-	Drawing & procedure	Drawing & procedure	Insp. Record		P	V	W	
		c. Check for completeness, verification of test / inspection record.	Critical	Visual	100%	QP, Tech. Spec. Drg. & Data Sheet	QP, Tech. Spec. Drg. & Data Sheet	Manu-facturer TC		P	V	V	CHP
		d. Cleanliness after sand / shot blasting of internal / external surfaces of FST & external surface of heater	Major	Visual	100%	As per BHEL Spec.	As per BHEL Spec.	Insp. Record			P	V	
		e. Painting & Packing for dispatch including blanking of all openings.	Major	Visual	100%	As per BHEl Spec.	As per BHEL spec.	Insp. Record			P	V	

LEGEND:
M: MANUFACTURER / VENDOR B: BHEL /NOMMNATED INSPECTION AGENCY, C: CUSTOMER / CUSTOMER NOMINATED INSPECTION AGENCY. P: PERORM, W: WITNESS V: VERFICATION, * D: RECORDS IDENTIFIED WITH (4) SHALL BE ESSENTIALLY INCLUDED IN QA DOCUMENTATION.
REFER SEPARATE ADDENDA SHEET FOR PROJECT/CUSTOMER SPECIFIC REQUIREMENTS

Prepared by :	Approved by:
G.T.S.K Dakshina Murthy ENGINEER / QA	Y.C.Venkateswara Rao SR.DGM/QA

	BHARAT HEAVY ELECTRICALS LIMITED R.C.PURAM, HYDERABAD	STANDARD QUALITY PLAN	QP No: HYQA/HE/SQP/500/01	REVISION: 03
		ITEM: DEAERATOR HEATER & STORAGE TANK TYPE: 660MW	SHEET 7 of 7	DATE: 22.07.2013

SL. No.	COMPONENT & OPERATIONS	CHARACTERISTICS	Class	Type of Check	QUANTUM OF CHECK	REFERENCE DOCUMENT	ACCEPTANCE NORMS	FORMAT OF RECORD	* D	AGENCY M	B	C	REMARKS
		f. Preservation of weld edge preparation	Major	Visual	100%	HE-7-1023/01	HE-7-1023/01	Insp. Record			P	V	
		g. Pre-dispatch inspection for cleanliness, completeness, dimensional check & blanking of open holes, and Review of Quality documentation	Major	Visual	100%	Drg. / QP / Spn.	Drg. / QP / Spn	-			P	V	

NOTE:

1. Materials tested at supplier's works as per specification and requirements as indicated in the Quality Plan and Drawing / Data Sheet shall be complied.
2. Latest revisions of BHEL specifications/ Drawings are applicable, however the copy of same will be shown to Customer/Customer appointed inspection agency.
3. All materials shall be as per approved drawing/data sheet.
4. In case of any inconsistency between Quality plan and BHEL drawing/data sheet, the latter shall prevail.

NOTES FOR FIXING TRAY ASSEMBLIES & SPRAY VALVES.

1. Spray valves are to be assembled prior to assembly of trays.
2. QC to ensure welding of stoppers for hold down rods and assembly of hold down angles with cleats.
3. QC to ensure tack welding of double lock nuts for spray valve fixing to valve plate.
4. QC to ensure availability of split pin through the top lock nut and stem of the spray valve before assembly of spray valve.
5. QC to ensure positioning of split pin at the bottom of hold down rod during tray assembly as per clause 2.4.C.
6. Latest revisions of Specifications / Drawings are applicable, however the copy of same will be shown to Customer/customer appointed inspection agency.

LEGEND:	Prepared by :	Approved by:
M: MANUFACTURER / VENDOR B: BHEL /NOMMNATED INSPECTION AGENCY, C: CUSTOMER / CUSTOMER NOMINATED INSPECTION AGENCY. P: PERORM, W: WITNESS V: VERFICATION, * D: RECORDS IDENTIFIED WITH (4) SHALL BE ESSENTIALLY INCLUDED IN QA DOCUMENTATION. **REFER SEPARATE ADDENDA SHEET FOR PROJECT/CUSTOMER SPECIFIC REQUIREMENTS**	G.T.S.K Dakshina Murthy ENGINEER / QA	Y.C.Venkateswara Rao SR.DGM/QA

FIRST ANGLE PROJECTION

(ALL DIMENSIONS ARE IN mm)

DRG. NO. 1-163-11-11426 SH OF

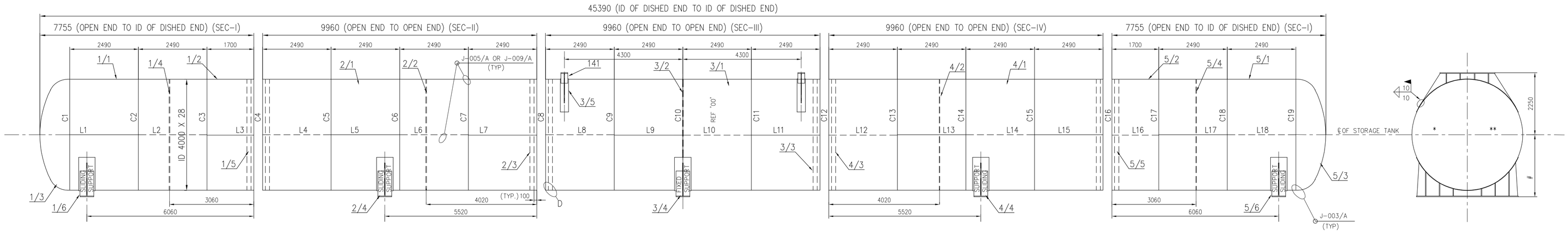

REFER DETAIL-C FOR STIFFENER RING TO SHELL WELDING

* L2, L4, L6, L8, L10, L12, L14, L16, L18
** L1, L3, L5, L7, L9, L11, L13, L15, L17

2250 (FOR FIXED SUPPORT) & 2235 (FOR SLIDING SUPPORT), 15mm DIFFERENCE IN HEIGHT IS COMPENSATED BY TEFLON ASSLY. (REFER DET-B)

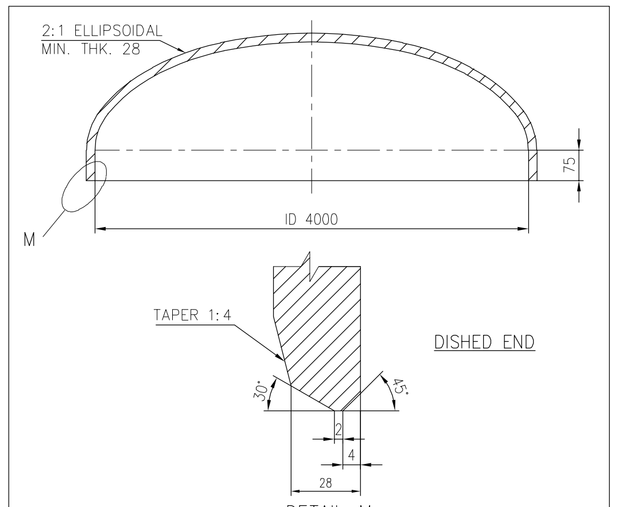

DETAIL-M

(POS. NO. 1/3, 5/3)

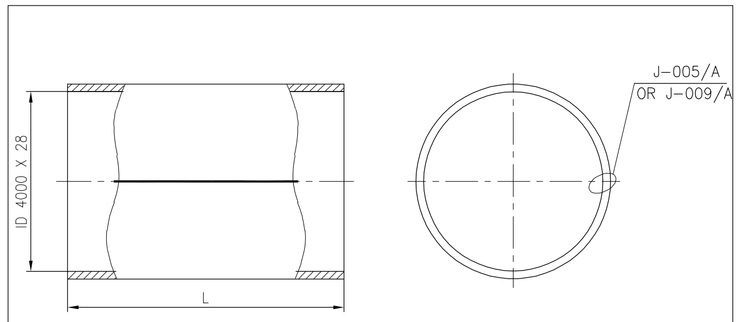

SHELL SEGMENT : (POS. NO. 1/1, 1/2, 2/1, 3/1, 4/1, 5/1, 5/2)

VARIANT TABLE

VAR.NO	L	WEIGHT (Kg)
01	2490	6939.68
02	1700	4738.06

1. EDGE PREPARATION SHALL BE EITHER AS PER J-005/A OR J-009/A OF WELD DETAIL DRG.NO. 2-163-10-00014.
2. DEVELOPED LENGTH= 12655

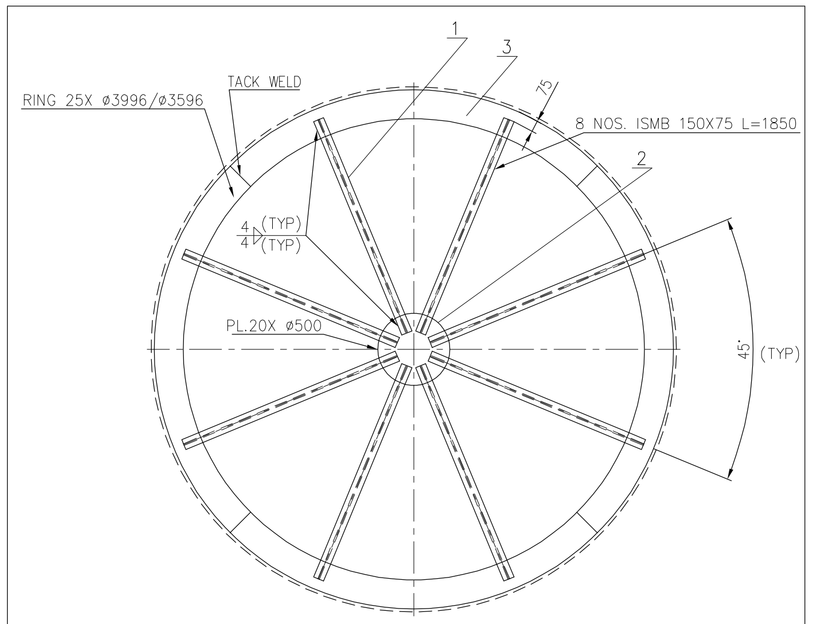

SPIDER ASSLY.

(POS. NO. 1/5, 2/3, 3/3, 4/3, 5/5)

PREFIX 1/, 2/, 3/, 4/, 5/ FOR POS. NOs. FOR SEC-I, II, III, IV, V RESPECTIVELY, EXCEPT POS. NO. 141.

NOTES:-

1. ALL LONGITUDINAL AND CIRCUMFERENTIAL WELDS ARE TO BACK GOUGED TO SOUND METAL
2. ALL BUTT WELD JOINTS TO BE 100 % RADIOGRAPHED.
3. FOR WELD DETAILS & WPS. NOS. REFER DRG. NO. 2-163-10-00014
4. POS. NOs. 1/5, 2/3, 3/3, 4/3, 5/5 ARE REQUIRED TO PREVENT DISTORTION OF SHELL SEGMENTS DURING TRANSPORTATION, TO BE REMOVED AFTER WELDING THE SECTIONS AT SITE.
5. DURING THE FIT UP OF DISHED END TO SHELL A REFERENCE LINE SHALL BE MARKED ON THE SHELL AT A DISTANCE OF 100MM FROM THE END OF THE SHELL , WHICH SHALL BE TRANSFERED BACK AFTER WELDING, TO IDENTIFY WELD LINE.
6. ADDITIONAL L-SEAM IS ACCEPTABLE FOR THE INDIVIDUAL SHELL SECTIONS BASED ON THE PLATE SIZES AVAILABLE WITH ENGINEERING CONCURRENCE.

VARIANT TABLE

VAR.NO	L	N	NO. OF RINGS	WEIGHT (Kg)
01	1860	5	1	578.56
02	3420	10	2	1157.13

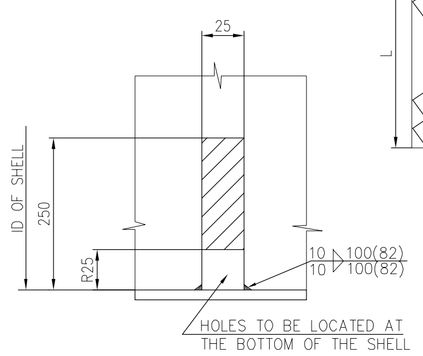

DETAIL-C

(POS. NO. 1/4, 2/2, 3/2, 4/2, 5/4)

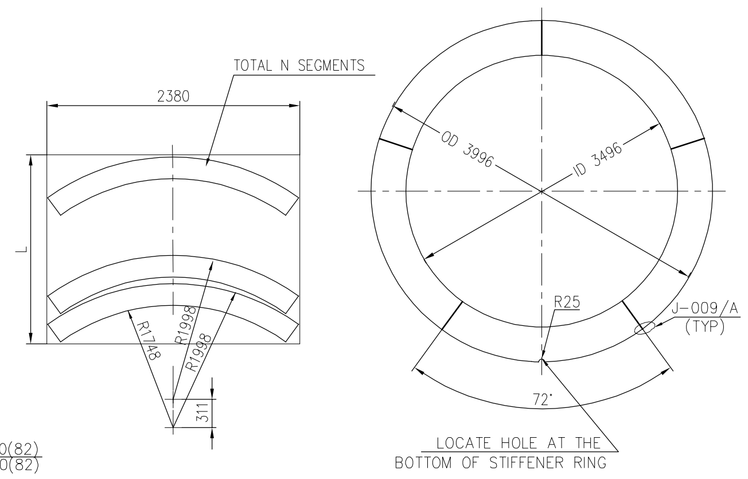

1. REFER WELD DETAIL DRG NO. 2-163-10-00014
2. PLATE THICKNESS= 25mm

STIFFENER RING

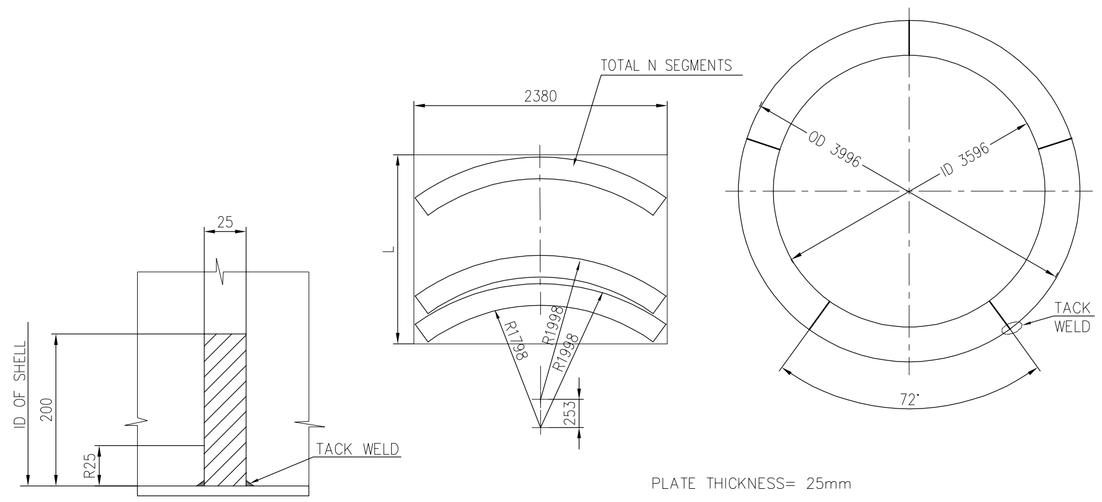

DETAIL-D

PLATE THICKNESS= 25mm

VARIANT TABLE

VAR.NO	L	N	NO. OF RINGS	WEIGHT (Kg)
01	1590	5	1	469.03
02	2850	10	2	938.06

RING FOR SPIDER ASSLY.

TYPE OF PRODUCT
OR
NAME OF CUSTOMER/PROJECT

BHARAT HEAVY ELECTRICALS LTD.
HYDERABAD

	NAME	SIGN.	DATE	NO.OF VAR.
DRN.	B UMA	B UMA	06.03.24	N.A
CHD.	UMESH MENON	UMESH MENON	06.03.24	
APPD.	UMESH MENON	UMESH MENON	06.03.24	

DEPT.	GRADE OF TOL.DIM.	SCALE	WEIGHT (KG)	REF. TO ASSY DRG.	ITEM NO.	NO.OF ITEMS
HEE / 405	C/M/F	NTS	NA	NA	N.A	N.A

TITLE: SHELL ASSLY (FOR STORAGE TANK SHELL)

CARD CODE

DRAWING NO. 1-163-11-11426 REV. 00

SHEET No. 1 NO OF SHEETS 1

REV.	DATE	ALTERED	CHECKED	APPD
ZONE				

THE INFORMATION ON THIS DOCUMENT IS THE PROPERTY OF BHARAT HEAVY ELECTRICALS LIMITED.
IT MUST NOT BE USED DIRECTLY OR INDIRECTLY IN ANY WAY DETRIMENTAL TO THE INTEREST OF THE COMPANY

GENERAL DIMENSIONAL LIMITS,FITS & TOLERANCES AS PER HY0230261

COMPUTER FILE NAME | REF. DRG. NO. | SIGN. AND DATE | INVENTORY NO

FIRST ANGLE PROJECTION

(ALL DIMENSIONS ARE IN mm)

DRG. NO. 1-163-11-11427

SH OF

THE INFORMATION ON THIS DOCUMENT IS THE PROPERTY OF BHARAT HEAVY ELECTRICALS LIMITED.
IT MUST NOT BE USED DIRECTLY OR INDIRECTLY IN ANY WAY DETRIMENTAL TO THE INTEREST OF THE COMPANY

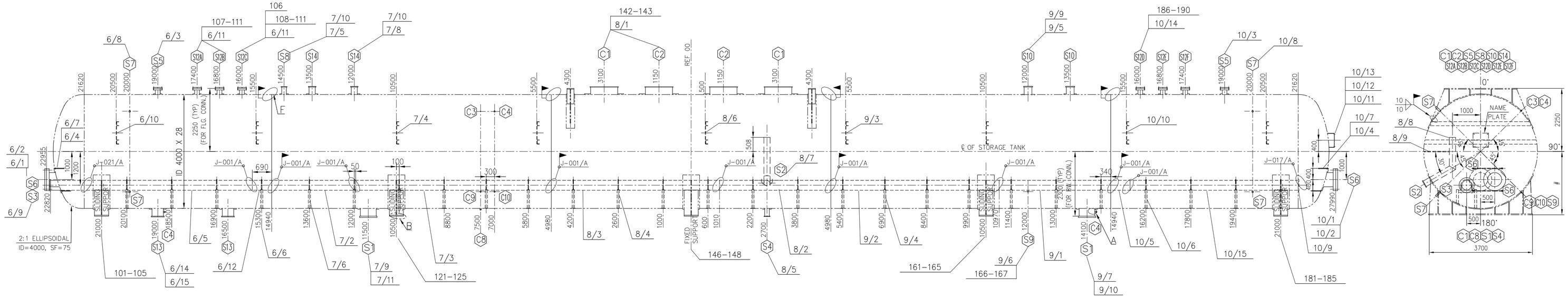

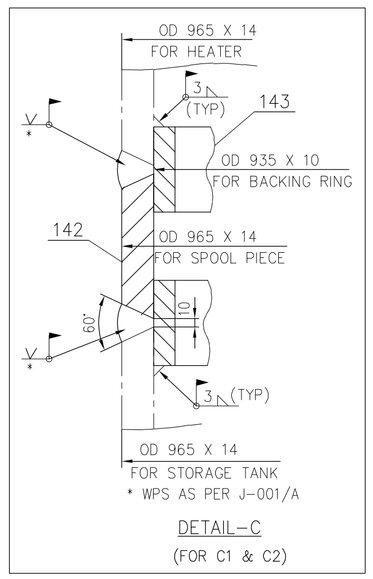

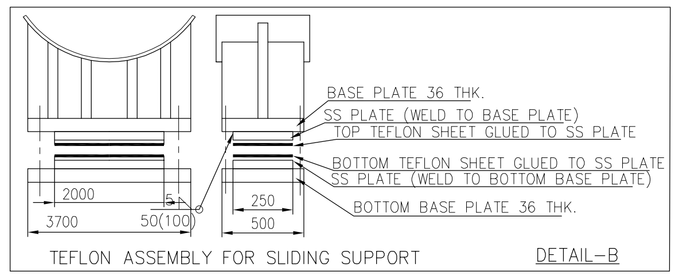

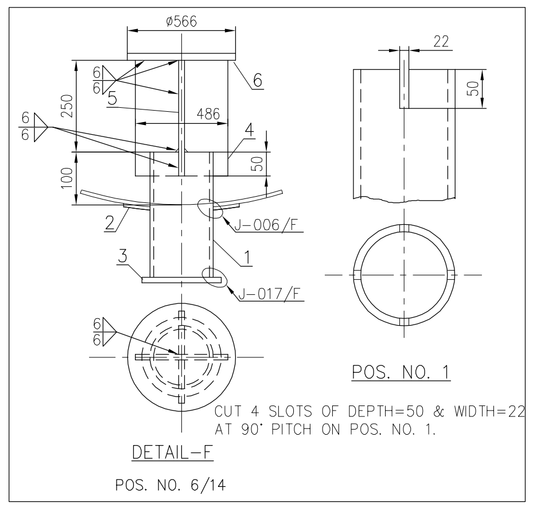

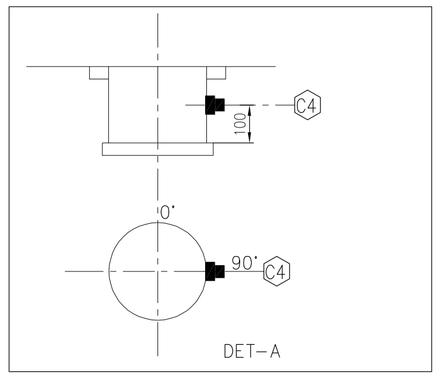

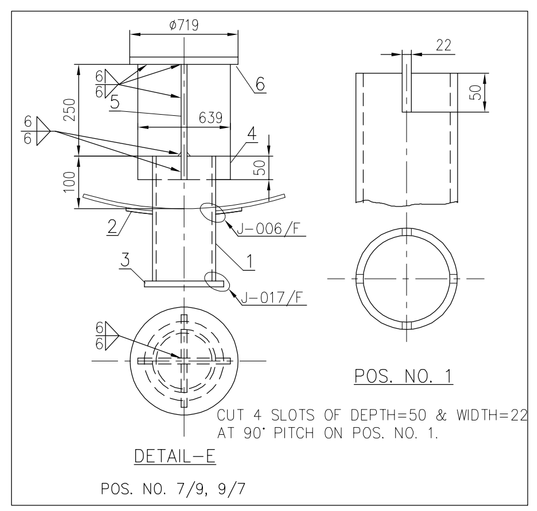

* SPHERICAL DISH ARE ALREADY PRESSED TO REQ. RADIUS AT SUPPLIERS WORK & NO FUTHUR PRESSING IS REQUIRED.

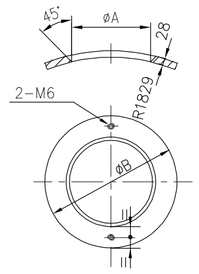

#= 2250 (FOR FIXED SUPPORT) & 2235 (FOR SLIDING SUPPORT), 15mm DIFFERENCE IN HEIGHT IS COMPENSATED BY TEFLON SHEET ASSLY. (REFER DET-B)

PREFIX 1/, 2/, 3/, 4/, 5/ FOR POS. NOs. FOR SEC-I, II, III, IV, V RESPECTIVELY, EXCEPT POS. NOs. 101–113, 121–130, 142–148, 161–169, 181–193.

FOR C4 REFER POS. NO. 6/13, 7/1, 9/7, 112–113, 129–130, 168–169
FOR C8, C9 REFER POS. NO. 7/1, 129
FOR C10 REFER POS. NO. 7/1
FOR C3 REFER POS. NO. 7/7, 126–128

IMPORTANT:–
SUBCONTRACTOR SHALL TAKE CONCURRENCE FROM HE ENGG. DEPARTMENT, BEFORE MAKING ANY OPENINGS FOR NOZZLES ON THE SHELL & DISHED ENDS.

NOTES:–

1. ALL NOZZLE BOLT HOLES SHALL STRADDLE NORMAL CENTRE LINES OF VESSEL.
2. ALL FABRICATED NOZZLES TO BE FULLY RADIOGRAPHED.
3. BUTT WELD CONNECTIONS TO HAVE HYDROTEST BLANK – OFF PLATES LEFT IN PLACE (TO BE REMOVED AFTER HYDRAULIC TEST AT SITE)
4. WPS FOR FILLET WELDS ON SHELL ARE AS PER J-002/A & FILLET DIMENSION SHOWN SHOWN IS THROAT DIMENSION
5. ALL LONGITUDINAL AND CIRCUMFERENTIAL WELDS ARE TO BE BACK-GOUGED TO SOUND METAL.
6. M.P TEST REQUIRED ONLY AT NOZZLE TO HEAD WELDS AND NOZZLE TO SHELL WELDS
7. TANK WILL BE DESPATCHED IN FIVE SECTIONS.
8. INSIDE EDGES OF ALL PROJECTED NOZZLES SHALL BE ROUNDED OFF.
9. NOZZLES WHICH OVERLAP C-SEAMS SHALL MEET THE REQUIREMENTS OF UW-14
10. FOUNDATION BOLTS: M56x400 STUD WITH TWO NUTS 44 No'S PER SET ALONG WITH WASHER SHALL BE SUPPLIED.
11. HYDROSTATIC TEST AS PER HY0852061
12. SPOOL PIECE CONSTRUCTED OF SA 516/70 WILL BE SUPPLIED TO AID IN PROPER FIT UP OF THE DOWN COMMERS AND EQUALIZERS. TWO BACKING RINGS WILL BE SUPPLIED WITH EACH SPOOL PIECE (REFER DET-C).
13. STORAGE TANK TO HEADER CONNECTION SHALL BE AS PER DET-C AT SITE. (DOWN COMMERS & EQUALISERS)
14. VENTILATOR IS A FLANGED CONN. BLANKED WITH A BLIND FLANGE. THIS CAN BE USED FOR VENTILATION INSIDE THE STORAGE TANK DURING ANY MAINTAINANCE OPERATION. THIS IS POSSIBLE BY OPENING THE BLIND FLANGE OF THE VENTILATOR NOZZLE.
15. SPOOL PIECE ARE EDGE PREPARED ONLY ON ONE SIDE AT WORKS. CUTTING SPOOL PIECE TO EXACT LENGTH AS PER SITE REQUIREMENT AND EDGE PREPARATION ON THE OTHER SIDE IS IN SITE SCOPE OF WORK.
16. BOLTING TO SECURE HEATER TO STORAGE TANK IS OF M27x160 IN SIZE AND 8 No'S IN QTY.
17. SYMBOL ⚑ INDICATES SITE WELDING
18. SADDLE SUPPORTS FOR SUPPORTING DEAERATOR HEATER SHALL BE DESPATCHED IN TACK WELDED CONDITION FROM WORKS. FINAL WELDIND SHALL BE AT SITE.
19. FOR NAME PLATE (POS. NO. 10/12) DRG. NO. REFER ST.TANK ASSLY. DRG.
20. TEST COUPONS REQUIRED FOR ALL LONGITUDINAL SEAM OF ROLLED PIPES & SPOOL PIECES.
21. EQUIVALENT/SUPERIOR GRADES MATERIAL ARE ACCEPTABLE FOR ALL THE MATERIALS WITH ENGINEERING CONCURRENCE.
22. MATERIAL OF HIGHER THICKNESS IS ACCEPTABLE FOR ALL PLATES, PIPES, ANGLES AND TUBES WITH ENGINEERING CONCURRENCE.

* NOTES FOR LIST OF NOZZLE CONN.

1) FOR DETAILS J-001/F, J-002/F, J-007/F, J-015/F, J-017/F, J-021/F REFER DRG. NO. 2-163-10-00014.
2) FOR DETAILS D1 TO D32 REFER DRG. NO. 1-163-10-11267
3) FOR DETAIL-B, C, E & F REFER THIS DRG.

** SW PIPE TO COUPLING AFTER REMOVING PLUG

LIST OF NOZZLE CONNECTIONS

REF.	DESCRIPTION	SIZE	OD X THK	QTY	TYPE	WELDING DETAILS: SHELL TO NOZZLE END CONNECTION: * NOZZLE	* AT WORKS	* AT SITE	REMARKS	ØA	ØB	REF.	VAR.
S1	FEED WATER OUTLET FOR TDBFP	22"	559 x 14	2	BW	DET-D32	DET-D32	DET-D5	WITH VORTEX BREAKER	575	750	S1	01
S2	OVER FLOW CONN.	8"	219.1 X 12.7	1	BW	DET-D1	DET-D1	DET-D5		235	400	S2	02
S3	INITIAL HEATING STEAM CONN.	14"	355.6 X 12.7	1	BW	DET-D1	DET-D1	DET-D5		372	600	S3	03
S4	DRAIN CONN.	6"	168.3 X 10.97	1	BW	DET-D2	DET-D2	DET-D5		184	300	S4	04
S5	VENTILATOR	6"	168.3 X 10.97	2	FLG 300# RF	DET-D4	DET-D4		REFER NOTE-15	184	300	S5	05
S6	MAN HOLES	24"	610.0 x 14	2	FLG 300# RF	J-007/F	J-015/F			626	950	S6	06
S7	STAND PIPE CONN.	2"	60.3 X 8.74	4	BW	DET-D17	DET-D17	DET-D21				S7	07
S8	INITIAL FILLING CONN.	6"	168.3 X 10.97	1	BW	DET-D1	DET-D1	DET-D5		184	300	S8	08
S9	SAMPLING CONN.	1"	COUPLING 6000#	1	SW	DET-D6	DET-D6	DET-D31	**			S9	09
S10	TDBFP RECIRCULATION CONN.	10"	273.1 X 12.7	2	BW	DET-D10	DET-D10	DET-D5	WITH DISPERSER	289	450	S10	10
S12A-F	SAFETY RELIEF VALVE CONN.	6"	168.3 X 10.97	6	FLG 300# RF	DET-D8	DET-D8	DET-D8		184	300	S12A-F	12
S13	FEED WATER OUTLET FOR MDBFP	16"	406.4 x 12.7	2	BW	DET-D32	DET-D32	DET-D5	WITH VORTEX BREAKER	422	600	S13	13
S14	MDBFP RECIRCULATION CONN.	8"	219.1 X 12.7	2	BW	DET-D10	DET-D10	DET-D5	WITH DISPERSER	235	400	S14	14
C1	EQUALISER CONN.	38"	965 X 14	2	BW	DET-D1	DET-D1	DET-D5/ DET-C		981	1400	C1	21
C2	DOWNCOMMER CONN.	38"	965 X 14	2	BW	DET-D1	DET-D1	DET-D5/ DET-C		981	1400	C2	21
C3	PRESSURE GAUGE CONN.	1/2"	COUPLING 6000#	1	SW	DET-D6	DET-D6	DET-D31	**			C3	23
C4	TEMPERATURE GAUGE CONN.	M33X2	COUPLING	3	SCREWED	J-008/A	****	SCREW THERMOWELL	SPECIAL COUPLING			C4	24
C8	PG TEST THERMOWELL CONN.	M33X2	COUPLING	1	SCREWED	J-008/A	****	SCREW THERMOWELL	SPECIAL COUPLING			C8	24
C9	TEMPERATURE STUB FOR REMOTE	M33X2	COUPLING	1	SCREWED	J-008/A	****	SCREW THERMOWELL	SPECIAL COUPLING			C9	24
C10	CONN. FOR RTD	M33X2	COUPLING	1	SCREWED	J-008/A	****		SPECIAL COUPLING			C10	24

**** SCREW PLUG

GENERAL DIMENSIONAL LIMITS,FITS & TOLERANCES AS PER HY0230261

COMPUTER FILE NAME | REF. DRG. NO. | SIGN. AND DATE | INVENTORY NO

REV.	DATE	ALTERED	CHECKED	APPD	REV.	DATE	ALTERED	CHECKED	APPD	REV.	DATE	ALTERED	CHECKED	APPD	REV.	DATE	ALTERED	CHECKED	APPD	REV.	DATE	ALTERED	CHECKED	APPD	REV.	DATE	ALTERED	CHECKED	APPD	REV.	DATE	ALTERED	CHECKED	APPD
ZONE					ZONE					ZONE					ZONE					ZONE					ZONE					ZONE				

TYPE OF PRODUCT
OR
NAME OF CUSTOMER/PROJECT

BHARAT HEAVY ELECTRICALS LTD.
HYDERABAD

	NAME	SIGN.	DATE	NO.OF VAR.
DRN.	B UMA	B UMA	06.03.24	
CHD.	UMESH MENON	UMESH MENON	06.03.24	
APPD.	UMESH MENON	UMESH MENON	06.03.24	

DEPT.	GRADE OF TOL.DIM. C/M/F	SCALE	WEIGHT (KG)	REF. TO ASSY DRG.	ITEM NO.	NO.OF ITEMS
HEE		NTS	NA	NA	NA	NA
CODE 405						

TITLE
NOZZLE ASSLY. DETAILS
(DEAERATOR STORAGE TANK)

CARD CODE

DRAWING NO. 1-163-11-11427 REV. 00

SHEET No. NO OF SHEETS

FIRST ANGLE PROJECTION

(ALL DIMENSIONS ARE IN mm)

DRG. NO. 3-163-11-12033

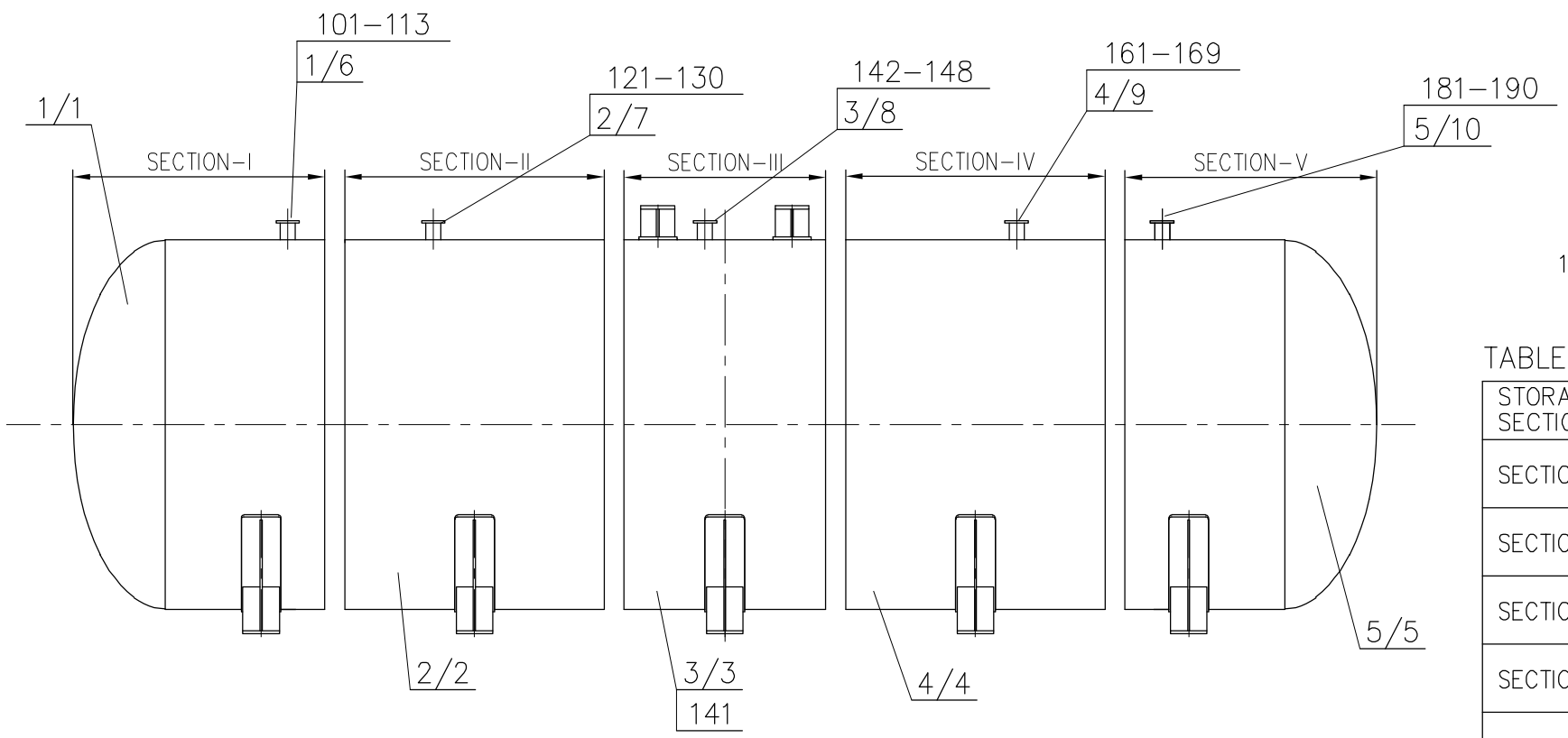

NOTES:

1. POS. NO. 1/1 FOR SHELL ASSLY. SEC-I, REFER DRG NO. 1-163-11-11426
2. POS. NO. 2/2 FOR SHELL ASSLY. SEC-II, REFER DRG NO. 1-163-11-11426
3. POS. NOs. 3/3, 141 FOR SHELL ASSLY. SEC-III, REFER DRG NO. 1-163-11-11426
4. POS. NOs. 4/4, FOR SHELL ASSLY. SEC-IV, REFER DRG NO. 1-163-11-11426
5. POS. NO. 5/5 FOR SHELL ASSLY. SEC-V, REFER DRG NO. 1-163-11-11426
6. POS. NOs. 1/6, 101-113 FOR NOZZLE ASSLY. SEC-I, REFER DRG NO. 1-163-11-11427
7. POS. NOs. 2/7, 121-130 FOR NOZZLE ASSLY. SEC-II, REFER DRG NO. 1-163-11-11427
8. POS. NOs. 3/8, 142-148 FOR NOZZLE ASSLY. SEC-III, REFER DRG NO. 1-163-11-11427
9. POS. NOs. 4/9, 161-169 FOR NOZZLE ASSLY. SEC-IV, REFER DRG NO. 1-163-11-11427
10. POS. NOs. 5/10, 181-190 FOR NOZZLE ASSLY. SEC-V, REFER DRG NO. 1-163-11-11427

TABLE-I

STORAGE TANK SECTION. NO.	DES. WT. IN (Kg)	TOTAL WT. IN (Kg)	HEADER MATL. NO.	VESSEL NO.	W.O WBSE
SECTION-I	30167	31646	T31631112033-00A	2049	W-1032421900
				2055	W-1032422000
SECTION-II	34079	34738	T31631112033-00B	2050	W-1032421900
				2056	W-1032422000
SECTION-III	35767	37503	T31631112033-00C	2053	W-1032421900
				2057	W-1032422000
SECTION-IV	34128	34787	T31631112033-00D	2052	W-1032421900
				2058	W-1032422000
SECTION-V	29579	31056	T31631112033-00E	2051	W-1032421900
				2059	W-1032422000

DESIGN DATA

DESCRIPTION			
DESIGN PRESSURE		Kg/sq.cm (g)	14.5 & FULL VACUUM
TEST PRESSURE		Kg/sq.cm (g)	21.75
DESIGN TEMP. MAX/MIN		°C	260/0
TEST TEMP. MAX/MIN		°C	AMBIENT/17
CORROSION ALLOW. IN mm	SHELL/ HEADS		3.2
	RF PADS/ NOZZLES/ FLANGES mm		1.6
RADIO GRAPHY			100%
JOINT EFFICIENCY			1.0
INSPECTION			AS PER APPROVED QP
TOTAL WEIGHT OF ST.TANK		KG	REFER TABLE-1
DESPATCH WEIGHT		KG	REFER TABLE-1
PWHT			REQUIRED

DESIGN, FABRICATION & TESTING CODE	IBR CHAPTER-XII (CLASS-1 BOILER), ASME SEC VIII DIV.1-2021, HEI-2011
W.O WBSE	W-10324219/220 00
S.O WBSE	M-PA-1035
CUSTOMER DRG.No. / VESSEL NO.	HY-DG-1-26310-05101-S00-R00/REFER TABLE-I
WELD DET.& WPS DRG.No.	2 163 10 00014
NOZZLE DETAIL DRG. No.	1 163 10 11267
HEADER MATERIAL NO.	REFER TABLE-I

TYPE OF PRODUCT OR NAME OF CUSTOMER/PROJECT: DVC-RAGHUNATHPUR (2X660MW)

IMPORTANT NOTE:-

1) PAINTING INSIDE: STEAM WASHABLE PAINT AS PER AA55151.
   OUTSIDE: TWO COATS OF HEAT RESISTANT ALUMINIUM PAINT AS PER AA56134.
2) FOR NAME PLATE DETAILS REFER DRG. 4-163-11-14106.

REV.	DATE	ALTERED	CHECKED	APPD
ZONE				

BHARAT HEAVY ELECTRICALS LTD. HYDERABAD

	NAME	SIGN.	DATE	NO.OF VAR.
DRN.	B UMA	B UMA	06.03.24	NA
CHD.	UMESH MENON	UMESH MENON	06.03.24	
APPD.	UMESH MENON	UMESH MENON	06.03.24	

DEPT.	GRADE OF TOL.DIM. C/M/F	SCALE	WEIGHT (KG)	REF. TO ASSY DRG.	ITEM NO.	NO.OF ITEMS
HEE		NTS	NA	NA	NA	NA
CODE 405						

TITLE: ST.TANK ASSLY. (DEAERATOR)

CARD CODE

DRAWING NO. 3-163-11-12033 REV. 00

SHEET No. NO OF SHEETS

THE INFORMATION ON THIS DOCUMENT IS THE PROPERTY OF BHARAT HEAVY ELECTRICALS LIMITED. IT MUST NOT BE USED DIRECTLY OR INDIRECTLY IN ANY WAY DETRIMENTAL TO THE INTEREST OF THE COMPANY

INVENTORY NO | SIGN. AND DATE | REF. DRG. NO.

FIRST ANGLE PROJECTION

(ALL DIMENSIONS ARE IN mm)

DRG. NO. 3-163-16-11742

NOTES:

1. POS. NO. 1/1 FOR SHELL ASSLY. REFER DRG NO. 3-163-16-11665
2. POS. NOS. 1/2, 51-61 FOR NOZZLE ASSLY. REFER DRG. NO. 1-163-16-11511
3. POS. NO. 1/3 FOR WATER BOX ASSLY. REFER DRG. NO. 1-163-16-11563
4. POS. NO. 1/4 FOR TRAY ASSLY. REFER DRG. NO. 1-163-16-11461

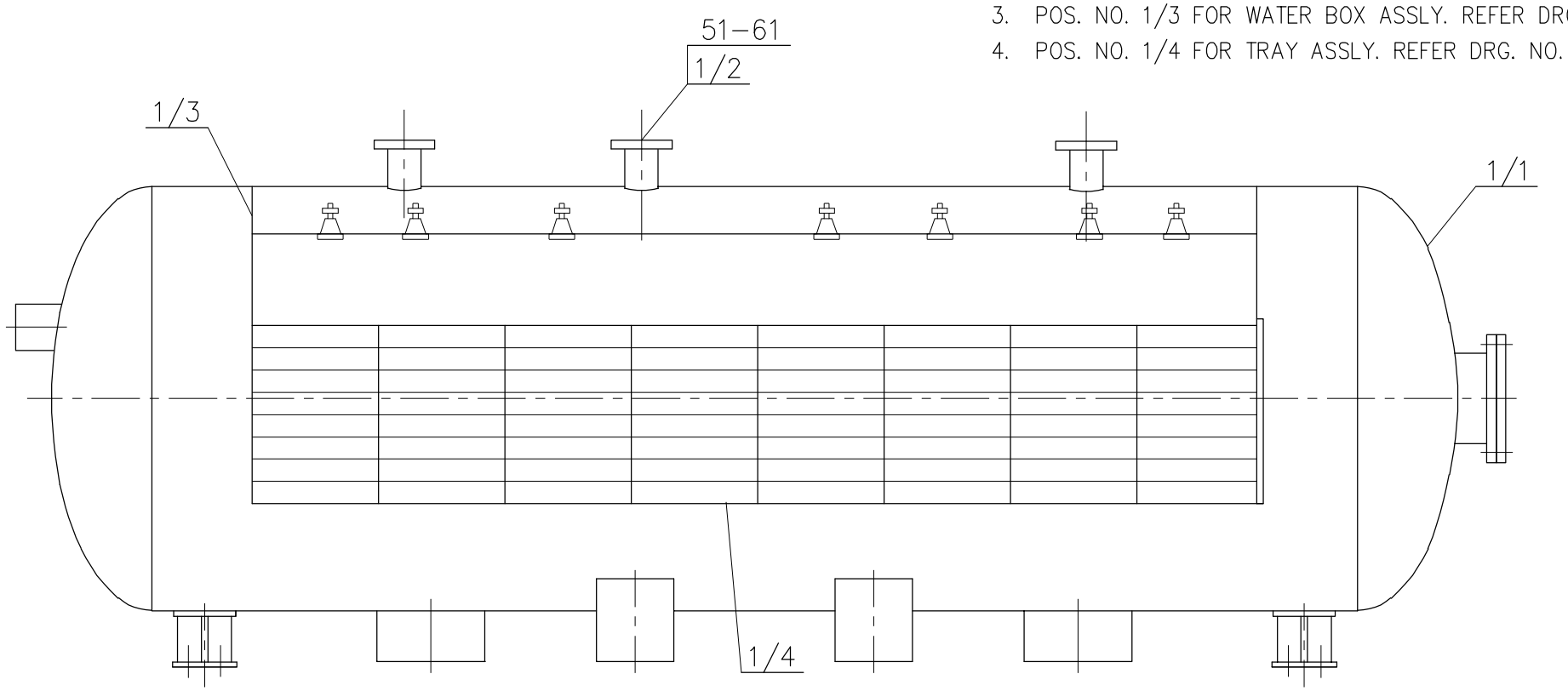

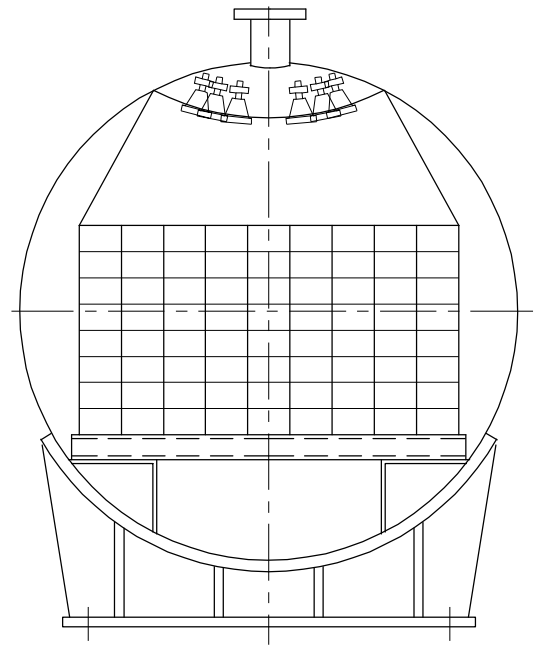

DESIGN DATA

DESCRIPTION			
DESIGN PRESSURE		Kg/sq.cm (g)	14.5 & FULL VACUUM
TEST PRESSURE		Kg/sq.cm (g)	28.65
DESIGN TEMP. MAX/MIN		°C	415/0
TEST TEMP. MAX/MIN		°C	AMBIENT/17
CORROSION ALLOW. IN mm	SHELL/ HEADS		3.2
	RF PADS/ NOZZLES/ FLANGES mm		1.6
RADIO GRAPHY			100%
JOINT EFFICIENCY			1.0
INSPECTION			AS PER APPROVED QP
TOTAL WEIGHT OF HEATER		KG	53058
DESPATCH WEIGHT		KG	52200
PWHT			REQUIRED

DESIGN, FABRICATION & TESTING CODE	IBR CHAPTER-XII (CLASS-1 BOILER), ASME SEC VIII DIV.1-2021, HEI-2011
W.O WBSE	W-10324219/220 00
S.O WBSE	M-PA-1035
CUSTOMER DRG.No. / VESSEL NO.	HY-DG-1-26310-05101-S00-R00/ 2054/2060
WELD DET.& WPS DRG.No.	2 163 10 00014
NOZZLE DETAIL DRG. No.	1 163 10 11267
HEADER MATERIAL NO.	T31631611742-00

TYPE OF PRODUCT OR NAME OF CUSTOMER/PROJECT: DVC-RAGHUNATHPUR 2X660MW

IMPORTANT NOTE:-

1) PAINTING INSIDE: NIL
OUTSIDE: TWO COATS OF HEAT RESISTANT ALUMINIUM PAINT AS PER AA56134.

REV.	DATE	ALTERED	CHECKED	APPD
ZONE				

BHARAT HEAVY ELECTRICALS LTD. HYDERABAD

	NAME	SIGN.	DATE	NO.OF VAR.
DRN.	B UMA	B UMA	06.03.24	NA
CHD.	UMESH MENON	UMESH MENON	06.03.24	
APPD.	UMESH MENON	UMESH MENON	06.03.24	

DEPT.	GRADE OF TOL.DIM. C/M/F	SCALE	WEIGHT (KG)	REF. TO ASSY DRG.	ITEM NO.	NO.OF ITEMS
HEE		NTS	NA	NA	NA	NA
CODE 405						

TITLE: HEATER ASSLY. (DEAERATOR)

CARD CODE

DRAWING NO. 3-163-16-11742 REV. 00

SHEET No. NO OF SHEETS

THE INFORMATION ON THIS DOCUMENT IS THE PROPERTY OF BHARAT HEAVY ELECTRICALS LIMITED.
IT MUST NOT BE USED DIRECTLY OR INDIRECTLY IN ANY WAY DETRIMENTAL TO THE INTEREST OF THE COMPANY

INVENTORY NO | SIGN. AND DATE | REF. DRG. NO.