ANNEXURE -A

BHARAT HEAVY ELECTRICALS LIMITED
HEEP HARIDWAR INDIA-PIN 249403
FAX NO: 0091 1334 226462
PHONE NO: 01334 285076

REQUIREMENT OF CENTRIFUGAL CHILL CASTING:

The Heavy Electricals Equipment Plant (HEEP) located in Haridwar, India is one of the major manufacturing plants of Bharat Heavy Electricals Ltd. The core business of HEEP includes design and manufacture of large steam and gas turbines, turbo generators, Defense Items and so on.
Details of items details as below:

Sl. No.	MAT CODE	ITEM DISCREPTION	Quantity	UOM	Delivery DAYS
1	W93078205037	DRG: 37829913130 REV: 00 CENTRIFUGAL CHILL CAST 'GUIDE BUSHING' ROUGH MACHINED AS PER CASTING P/N 37829913130 FOR FINISH MACHINING AS PER P/N 1376-05-130 N.STD: AA 19936	20	NOS	180 DAYS
2	W93078299112	DRG: 47829913208 REV: 00 CENTRIFUGAL CHILL CAST 'BUSHING, GUN BARREL' ROUGH MACHINED AS PER CASTING P/N 47829913208 FOR FINISH MACHINING AS PER P/N 1376-05-208 N.STD:AA 19936	20	NOS	180 DAYS

1. ALL VENDORS TO PROVIDE POINT WISE REPLY/CONFIRMATION ALONG WITH RELEVANT SUPPORTING DOCUMENTS TO EACH AND EVERY POINT OF **PRE-QUALIFICATION REQUIREMENT/PQR** FOR ALL ENQUIRY ITEMS. NONCOMPLIANCE OF THESE MAY LEAD TO REJECTION OF OFFER AS THESE ARE ESSENTIAL CONDITION FOR PARTICIPATING IN TENDER ENQUIRY.
2. VENDOR TO SUBMIT DULY FILLED, SIGNED & STAMPED **PQR SHEET** WITH SUPPORTING DOCUMENTS ALONG WITH OFFER.
3. VENDOR TO SUBMIT DULY SIGNED & STAMPED **QUALITY & COMMERCIAL** ALONG WITH OFFER.
4. VENDOR TO SUBMIT DULY SIGNED & STAMPED SPECIFICATION AA19936, AA 085 01 31, AA 085 01 31 & DRWAINGS WITH OFFER.
5. EARLY DELIVERY IS ACCEPTABLE AFTER 10.04.2027 ONWARDS.
6. **QUALITY REQUIREMENTS:**

   a) VENDORS TO CONFIRM FOR INSPECTION BY BHEL/BHEL TPIA M/S. QUEST AS PER BHEL AND APPROVED QUALITY PLAN.
   b) VENDOR TO SUBMIT DETAILED QULAITY PLAN COVERING RAW MATERIAL CHECKS, IN PROCESS AND FINAL STAGE CHECKS FOR BHEL APPROVAL AS PER ATTACHED BHEL FORMAT IN-LINE WITH ENQUIRY DRAWING AND SPECIFICATION.
   c) IN CASE OF ORDERING, VENDORS TO FOLLOW INSPECTION TERMS AND CONDITION AS PER APPROVED QUALITY PLAN ONLY MENTIONED IN IDENTIFICATION REPORTS.

VENDOR'S SIGN & STAMP

QUALIFYING CONDITIONS for SAND CASTING

Sl. no.	PQR Requirement	Action	Vendor Response (Yes / No)
1.	who can manufacture or supply Phosphorus-Bronze Sand, Chill and Centrifugal Casting as per BHEL specification AA19936	Vendor to confirm	
2.	who has read and understood the BHEL specification AA19936	Vendor to confirm	
3.	who can arrange material as per specification AA19936. In case of any deviation/substitution, prior approval is required from BHEL.	Vendor to confirm	
4.	who can provide Material Test Certificate (MTC) from NABL accredited labs/Govt. approved Labs or OEM certified Labs	Vendor to confirm	
5.	who can provide Test reports	Vendor to confirm	
6.	*All the above points are the Mandatory Qualification Requirements. Offers of vendors not meeting these requirements will NOT be considered.*	Vendor to accept & confirm	

AGM/DPE

TECHNICAL CHECK LIST

Vendor to confirm the following pointwise:

1. Vendor to confirm to supply the items as per BHEL drawings and specification.

COMMERCIAL & QUALITY CHECKLIST

SL. NO.	TERMS & CONDITION	VENDOR's CONFIRMATION /REMARKS / REPLY
	TENDER DETAILS	
1	COMPANY / FIRM NAME OF BIDDER	
2	GEM BID NO	
	QUALITY REQUIREMENTS	
3a	VENDORS TO CONFIRM FOR INSPECTION BY BHEL/BHEL TPIA M/S. QUEST AS PER BHEL AND APPROVED QUALITY PLAN	
3b	VENDOR TO SUBMIT DETAILED QULAITY PLAN COVERING RAW MATERIAL CHECKS, IN PROCESS AND FINAL STAGE CHECKS FOR BHEL APPROVAL AS PER ATTACHED BHEL FORMAT IN-LINE WITH ENQUIRY DRAWING AND SPECIFICATION	
3c	IN CASE OF ORDERING, VENDORS TO FOLLOW INSPECTION TERMS AND CONDITION AS PER APPROVED QUALITY PLAN ONLY MENTIONED IN IDENTIFICATION REPORTS	
	COMMERICAL REMARKS	
4	VENDOR TO SUBMIT MAKE IN INDIA CERTIFICATE AS PER ATTACHED FORMAT.	
5	**BREACH OF CONTRACT CLAUSE:** VENDOR TO AGREE AS PER CLAUSE NO 14 OF ATC.	
6	**CONFLICT OF INTEREST** AMONG BIDDERS/ AGENTS: VENDOR TO AGREE AS PER CLAUSE NO 32 OF ATC.	
7	ACTION AGAINST BIDDERS / VENDOR / SUPPLIER / CONTRACTOR IN CASE OF DEFAULT SHALL BE AS PER CLAUSE 27 OF ATC.	
8	Vendor to confirm regarding **Declaration regarding compliance to Restrictions under Rule 144 (xi) of GFR 2017** as below: I have read the clause regarding restrictions on procurement from a bidder of a country which shares a land border with India. I certify that **OUR COMPANY / FIRM** is not from such a country/ has been registered with the Competent Authority (attach valid registration by the Competent Authority, i.e., the Registration Committee constituted by the Dept. for Promotion of Industry and Internal Trade (DPIIT).	
9	**Vendor to confirm the following:** We hereby confirm that we have not changed/ modified/materially altered any of the tender documents as downloaded from the website/ issued by BHEL and in case of such observance at any stage, it shall be treated as null and void.	
10	**Vendor to confirm the following:** We further confirm our unqualified acceptance to all Terms and Conditions, unqualified compliance to Tender Conditions	
11	REST TERMS AND CONDITIONS SHALL BE as per GEM (Latest Version- applicable at the time of issuance of enquiry) and Enquiry ATC (ADDITIONAL TERMS & CONDITIONS)	

VENDOR' S SIGN & STAMP

DOC REV NO.: 0

FIRST ANGLE PROJECTION | (ALL DIMENSIONS ARE IN mm) | FORM DG 38(B)

DRAWING No. 37829913130

12.5 ALL OVER

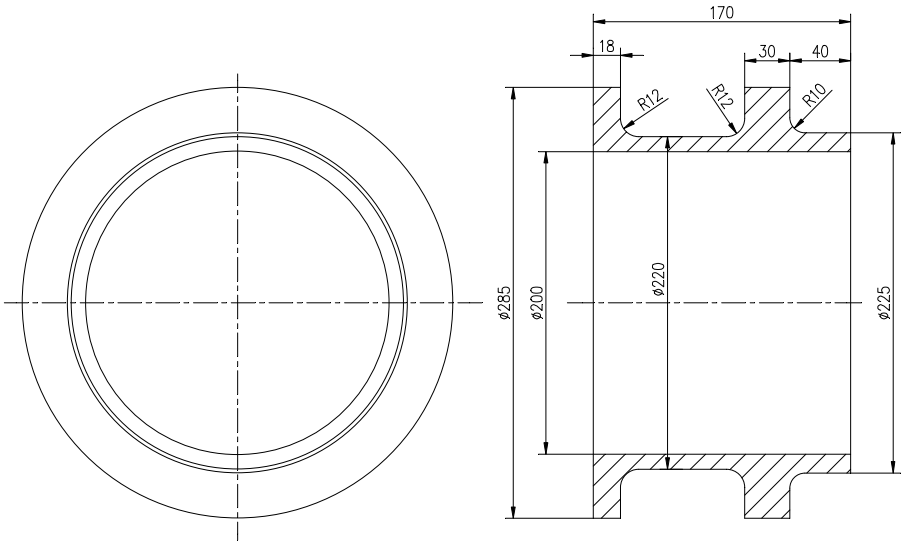

TECHNICAL REQUIREMENTS:–

1. THE CASTING SHALL BE SUPPLIED IN ROUGH MACHINED CONDITION WITH 3±1mm. ALLOWANCE ON ALL SURFACES MARKED WITH MACHINING SYMBOL 12.5.
2. THE CASTING SHALL BE DELIVERED TO MEET FULLY THE REQUIREMENTS AS PER ORDERING SPECIFICATION.
3. CASTING SHALL BE SUBJECTED TO D.P. TEST AS PER AA0850131 AND ACCEPTANCE NORM SHALL BE AS PER LEVEL II OF AA0850132.
4. DRG. NO. AND SUPPLIER'S IDENTIFICATION SHOULD BE MARKED ON THE SURFACE OF THE CASTING

COPYRIGHT AND CONFIDENTIAL

THE INFORMATION ON THIS DOCUMENT IS THE PROPERTY OF BHARAT HEAVY ELECTRICALS LIMITED. IT MUST NOT BE USED DIRECTLY OR INDIRECTLY IN ANY WAY DETERIMENTAL TO THE INTEREST OF THE COMPANY.

W93078205037

AA19936

1376-05-130 Drawing No>

Ref

Sign & Date

Inventory No.

~~GMS No./~~	C B O M 07820518001		STATUS OF DRG U
AGREED DEPT	NAME	SIGN	DATE
SPE	A.K.GUPTA	–Sd–	20.06.06
NCT	S.Gupta	–Sd–	21.09.06

GRADE OF UNTOL. DIM

M/CG.– AA0230208 m

WELDING–CLASS 'B' OF AA0621104

GAS CUTTING–TABLE 3 OF AA0621101

REV	DATE	ALTERED / CHECKED	REV	DATE	ALTERED / CHECKED	REV	DATE	ALTERED / CHECKED

TYPE OF PRODUCT OR NAME OF CUSTOMER/PROJECT: SRGM 76/62

BHARAT HEAVY ELECTRICALS LTD. RANIPUR, HARDWAR

	NAME	SIGN	DATE	NO. OF VAR
DRN	RAJPAL	–SD–	16.06.06	
CHD	ASHISH	–SD–	16.06.06	
APPD	P.K.S.	–SD–	22.09.06	73 74

DEPT MTE	SCALE	WEIGHT (KG)	REF. TO ASSY. DRG.	ITEM No.	NO. OF ITEMS
CODE 4300	1:2.5	22.15	17820513130		75 77

TITLE : CASTING FOR GUIDE BUSHIING (ROUGH MACHINED)

CARD CODE

DRAWING NO. 7 37829913130 22 23 24

SHEET No. 1 | No. OF SHEETS 1

SIZE A3

FIRST ANGLE PROJECTION (ALL DIMENSIONS ARE IN mm) FORM DG 39(B)

REV	DATE	ALTERED	REV	DATE	ALTERED	~~GMS No.~~/ C.B.O.M.– NO.	STATUS OF DRG
		CHECKED			CHECKED	07820518001	U
ZONE			ZONE				

AGREED DEPT	NAME	SIGN	DATE
SPE	A.GUPTA	–sd–	24.06.06
NCT	S. GUPTA	–sd–	20.09.06

GRADE OF UNTOL.DIM M/CG. C/M/F –AA0230208 | WELDING A/B/C/D AA0621104 | GAS CUTTING–T3 AA0621101

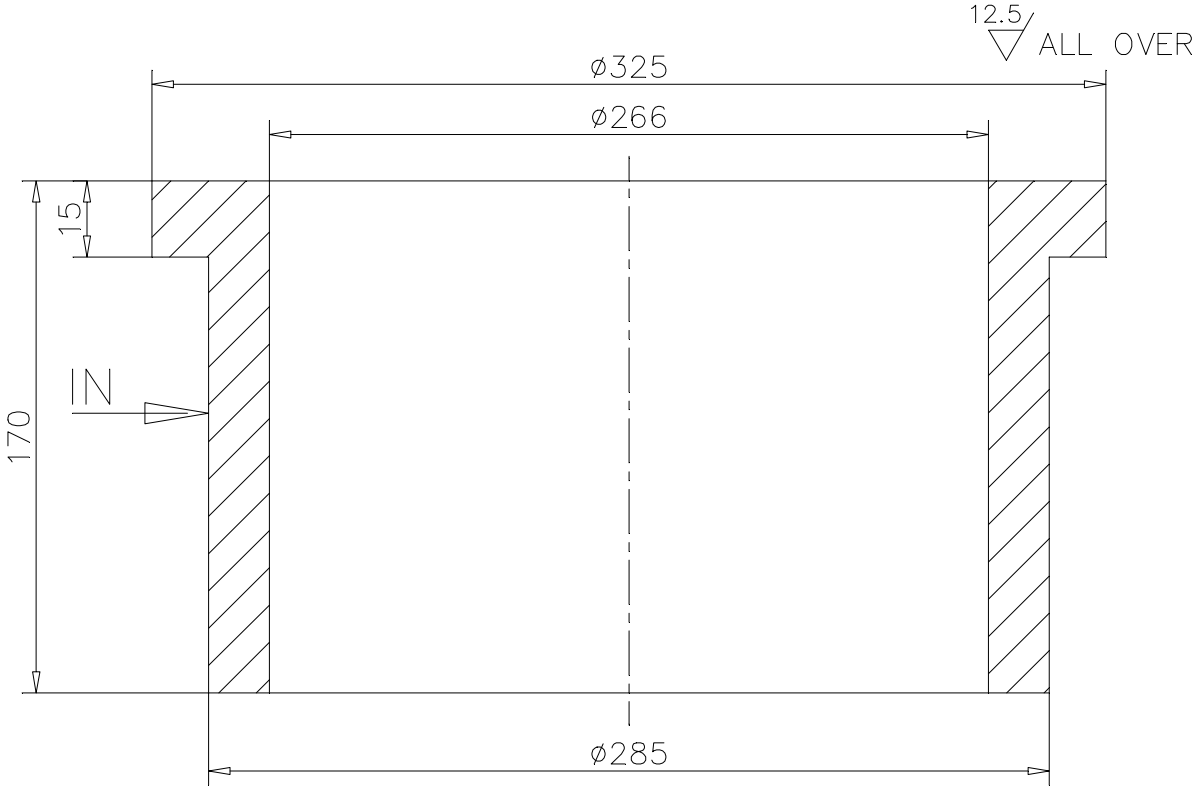

COPYRIGHT AND CONFIDENTIAL
THE INFORMATION ON THIS DOCUMENT IS THE PROPERTY OF BHARAT HEAVY ELECTRICALS LIMITED. IT MUST NOT BE USED DIRECTLY OR INDIRECTLY IN ANY WAY DETERIMENTAL TO THE INTEREST OF THE COMPANY.

TECHNICAL REQUIREMENTS:–

1. THE CASTING SHALL BE SUPPLIED IN ROUGH MACHINED CONDITION WITH 3±1mm. ALLOWANCE ON ALL SURFACES MARKED WITH MACHINING SYMBOL 12.5.
2. THE CASTING SHALL BE DELIVERED TO MEET FULLY THE REQUIREMENTS AS PER ORDERING SPECIFICATION.
3. CASTING SHALL BE SUBJECTED TO D.P. TEST AS PER AA0850131 AND ACCEPTANCE NORM SHALL BE AS PER LEVEL II OF AA0850132.
4. DRG. NO. AND SUPPLIER'S IDENTIFICATION SHOULD BE MARKED ON THE SURFACE OF THE CASTING

Ref. Drawing No. 1376-05-208

W93078299112

AA19936

Sign & Date

BHARAT HEAVY ELECTRICALS LTD.
RANIPUR, HARDWAR

	NAME	SIGN	DATE	NO. OF VAR
DRN	RAJPAL	–sd–	16.06.06	–
CHD	ASHISH	–sd–	16.06.06	
APPD	PKS	–sd–	22.09.06	

Inventory No.

DEPT	MTE	SCALE	WEIGHT (KG)	REF. TO ASSY. DRG.	ITEM No.	NO. OF ITEMS
CODE	4300	NTS	24.65	17820513208	–	–

TITLE : CASTING FOR BUSH (ROUGH MACHINED)

CARD CODE

DRAWING NO. 4782991320 8 22 23 24 –

SHEET No. 01 | No. OF SHEETS 01

A4 SIZE

BHEL	CORPORATE PURCHASING SPECIFICATION	AA19936 Rev No.04 PAGE 1 of 4

PHOSPHOR BRONZE SAND, CHILL AND CENTRIFUGAL CASTINGS GR.2

1.0 GENERAL:

This specification governs the quality requirements of Phosphor Bronze Sand Chill and Centrifugal Castings.

2.0 APPLICATION: For heavy duty bearings, bushes, gears and worm wheels.

3.0 CONDITION OF DELIVERY:

Unless otherwise specified, castings shall be supplied sand cast. Static chill cast or centrifugal chill cast shall be supplied when specified on BHEL order/drawing. Centrifugal chill castings shall be supplied in the homogenized condition as specified in Clause 8.0 below.

Castings shall not be painted.

4.0 COMPLIANCE WITH NATIONAL STANDARDS:

The material shall comply with the requirements of the following national standard and also meet the requirements of this specification.

IS:28–1985, Gr.2: Phosphor bronze ingots and castings

5.0 DIMENSIONS AND TOLERANCES:

The castings shall be true to the pattern/drawing.

Holes for machining up-to and including 60 mm in diameter are to be cast solid, unless otherwise stated on BHEL order/drawing

Unless otherwise specified on BHEL order/drawing, un-toleranced dimensions for the castings shall be as per Tolerance class-4 of BHEL standard AA0230402.

6.0 FINISH:

All castings shall be properly fettled, dressed and all surfaces shall be thoroughly cleaned.

7.0 FREEDOM FROM DEFECTS:

Castings shall be free from defects such as porosity, blow holes, inclusions, shrinkage, cavities, hard spots, cold shuts, cracks, etc., which may adversely affect machining and utility of castings.

COPYRIGHT AND CONFIDENTIAL
The Information on this document is the property of BHARAT HEAVY ELECTRICALS LIMITED.
It must not be used directly or indirectly in any way detrimental to the Interest of the company.

26/2/17

CS-995

Revisions: Clause.25.1 of MOM of MRC-NFM+HE			APPROVED: INTERPLANT MATERIAL RATIONALISATION COMMITTEE – MRC(NFM+HE)		
Rev No.04	Amd No.	Reaffirmed	Prepared	Issued	Dt. of 1st Issue
Dt:17-05-2013	Dt:	Year:	HPEP, Hyderabad	Corp.R&D	Oct 1977

CORPORATE PURCHASING SPECIFICATION

8.0 HEAT TREATMENT

Centrifugal chill castings shall be supplied in homogenised condition. Homogenisation shall be done at 550°C for about 2 hours.

9.0 CHEMICAL COMPOSITION:

The chemical composition of the material, when analysed in accordance with IS:4027 (Methods of chemical analysis for Bronzes) or by any other conventional / instrumental methods shall be as specified below:

Element	Percent	
	Minimum	Maximum
Tin	10.00	-
Phosphorus	0.50	-
*Lead	-	0.25
*Zinc	-	0.05
*Silicon	-	0.02
*Iron	-	0.10
*Aluminium	-	0.01
*Nickel	-	0.10
Total impurities	-	0.60
Copper	Remainder	

***Note:** These elements need not be determined when the material supplied conforms with the mechanical properties specified in this specification. However, the supplier shall ensure that the composition of the material lies within the limits specified above.*

10.0 TEST SAMPLES:

10.1. FOR SAND AND STATIC CHILL CASTINGS:

Each heat shall be analysed for chemical composition.
Three tensile test specimens shall be poured from each heat/lot.
If any tensile test specimen shows defects on machining or reveals casting defects, it shall be discarded and replaced by another specimen.

10.2. FOR CENTRIFUGAL CHILL CASTINGS:

In the case of centrifugal chill castings, test samples requirements shall be mutually agreed upon between BHEL and the supplier.

11.0 MECHANICAL PROPERTIES:

The test samples, when tested in accordance with IS:1608 shall show the following properties:

Property	Sand Cast	Static Chill Cast	Centrifugal Chill Cast
Tensile Strength, N/mm² (Min)	220	310	360
% Elongation on 5.65 $\sqrt{S_0}$ Gauge length (Min)	3	2	7

26/7/17
CS-995

12.0 FRACTURE TEST

One sample casting shall be broken in the presence of BHEL representative in such a manner that the area of the fracture is as large as practicable in order to determine the uniformity of grain structure of the metal. If the fracture shows segregation or dross or dirt spots or any other defect, all the castings produced from the same melt shall be rejected.

13.0 ADDITIONAL TESTS:

If specified on BHEL order/drawing, the following additional tests shall be conducted on the castings.

1) Pressure test
2) Radiographic test
3) Any other tests

Methods of testing and norms of acceptance shall be as prescribed on BHEL order/ drawing or mutually agreed upon.

14.0 RETEST:

Should any of the test pieces first selected, fail to pass the prescribed tests mentioned under various clauses in this specification, two further samples from the same batch shall be selected for testing, one of which shall be from the same casting from which the original test sample was taken, unless it has been withdrawn by the supplier.

Should the test pieces from both these additional samples pass, the batch represented by the test sample shall be accepted. Should the test pieces from either of these additional samples fail, the batch represented by the test sample shall be rejected.

15.0 INSPECTION AT SUPPLIER'S WORKS:

Whenever specified, tests and inspection are to be conducted in the presence of BHEL's representative.

BHEL's representative shall have free access at all times while the work on the contract is being performed, to all parts of the manufacturer's works. The manufacturer shall offer BHEL's representative all reasonable facilities without charge, to satisfy the latter that the material is being furnished in accordance with this specification. The manufacturer shall prepare and provide necessary test specimens for testing to be carried out at his premises. If facilities don't exists at his works, the manufacturer shall make necessary arrangements for carrying out the prescribed tests elsewhere. The manufacturer shall notify BHEL's representative in advance about the readiness of the material for inspection and testing.

C3-995 26/7/17

CORPORATE PURCHASING SPECIFICATION

BHEL reserves the right to test the material at BHEL's works and the final acceptance of the material shall be based on these test results.

16.0 REPAIR OF CASTINGS:

The castings shall not be repaired without prior permission of BHEL.

17.0 TEST CERTIFICATES:

Three copies of test certificates shall be supplied unless otherwise stated on BHEL order.

In addition, the supplier shall ensure to send one copy of test certificate along with the despatch documents to facilitate quick clearance of the material.

The test certificate shall bear the following information:
BHEL Order No.
AA19936, Rev.04: PHOSPHOR BRONZE SAND, CHILL AND CENTRIFUGAL CASTINGS GR.2
Supplier's reference and Name
Heat No.
Drawing/ Pattern No.
Method of Manufacture
Consignment/ Identification No
Dimensional inspection
Detail of heat treatment
Results of chemical, mechanical and other tests as called for in this specification.

18.0 PACKING AND MARKING

Castings shall be suitably packed to prevent corrosion and damage during transit.

Each package or casting (when supplied separately) shall be legibly marked with the following information:
AA19936
BHEL Order No.
Consignment/Identification No.
Heat No.
Weight
Supplier's reference and Name

19.0 REFERRED STANDARDS (Latest Publications including Amendments)

1) AA0230402 2) IS:4027 3) IS:1608

CS-995 26/2/12

PROCEDURE FOR LIQUID PENETRANT EXAMINATION

1.0 **SCOPE:**

1.1 This standard details the procedure for liquid penetrant examination of non-porous ferrous and non-ferrous and non-metallic materials such as ceramics, plastics, glass, etc.

1.2 Typical surface discontinuities detectable by this method are cracks, seams, laps, cold shuts, porosity, laminations, etc.

1.3 This standard conforms substantially with ASTM E 165 ~~—1980 (Reapproved 1983)~~ and ASME code section V, Article 6. (01)

2.0 **PERSONNEL REQUIREMENT:**

Personnel performig non-destructive examination and evaluation shall be qualified to the recommended practice SNT-TC-1A or any other recognised practice.

3.0 **DESCRIPTION:**

In principle a liquid penetrant is applied to the surface to be examined and allowed to enter discontinuities, excess penetrant removed, the part dried and a developer applied. The developer functions both as a blotter to absorb penetrant that has been trapped in discontinuities and as a contrasting back ground to enhance the visibility of penetrant indications.

4.0 **APPROVED METHODS & MATERIALS:**

4.1 Either a colour contrast or fluorescent penetrant method may be used. Any one of the following penetrants shall be used:

(a) Solvent Removable
(b) Post Emulsifying
(c) Water Washable

4.2 For nickel base alloys and/or for stainless steel materials used in nuclear components the penetrant materials, cleaner, penetrant developer, etc., used shall not contain sulphur or halogen above 1% by weight.

4.3 Selection of liquid penetrant material shall be from the same family (brand). Inter-mixing of family of liquid penetrant materials is not allowed.

5.0 **PROCEDURE:**

5.1 **Surface Preparation:**

COPYRIGHT AND CONFIDENTIAL
The information on this document is the property of BHARAT HEAVY ELECTRICALS LIMITED.
It must not be used directly or indirectly in any way detrimental to the interest of the company.

5.1.1 Surface preparation by grinding or machining or other method may be employed where surface irregularities may mask indications of unacceptable discontinuities.

5.1.2 The surface to be examined and all adjacent areas within at least 25 mm shall be dry and free from any dirt, lint, scale, rust, welding flux, weld spatter, grease, oil or other extraneous matter that could obscure surface openings or otherwise interfere with examination.

5.1.3 The surface to be examined shall be cleaned with detergents, organic solvents, descaling solutions or paint removers. Degreasing and ultrasonic cleaning may be employed to increase cleaning efficiency. Cleaning method employed is an important part of the examination procedure. Cleaning solvents shall meet the requirements of Cl.4.2

Caution: Blasting with shot or dull sand, rotofinishing, buffing, wire brusing the soft material or machining with dull tools shall not be used as they may peen the discontinuities at the surface.

5.2 **Drying:**

Drying, after cleaning the surface to be examined, shall be accomplished by normal evaporation or with forced hot air, as appropriate. A minimum period of time shall be established to ensure that the cleaning solution has evaporated prior to application of the penetrant.

5.3 **Application Of Penetrants:**

5.3.1 The penetrant shall be applied by dipping, brushing or spraying. If the penetrant is applied by spraying using compressed air type apparatus, filters shall be placed at the air inlet to preclude contamination of penetrant by oil, water or dirt sediment that may have collected in the lines. Spraying should only be performed in a booth equipped with exhaust system.

5.3.2 The length of penetration time is critical and depends upon the material being inspected, the process through which it has passed and the type of discontinuities expected. The recommended penetration time is given in Table 1.

5.3.3 The temperature of the penetrant and the surface of the part to be examined shall not be below 10°C(50°F) nor above 50°C(125°F) throughout the examination period. Local heating or cooling is permitted provided the temperatures remain in the range of 10 to 50°C during the examination. Where it is not practical to comply with these temperature limitations, other temperatures and times shall be used provided the procedures are qualified as described in Annexure-I.

5.4 **Removal Of Excess Penetrant:**

After the penetration time specified in the procedure has elapsed, any penetrant remaining on the surface shall be removed, taking care to minimise removal of penetrant from discontinuities.

COPYRIGHT AND CONFIDENTIAL
The information on this document is the property of BHARAT HEAVY ELECTRICALS LIMITED.
It must not be used directly or indirectly in any way detrimental to the interest of the company.

5.4.1 **Postemulsifying Penetrants:**

The emulsifier shall be applied by spraying or dipping. The emulsifying time shall not exceed 5 minutes. After emulsification, the mixture shall be removed by water spray.

5.4.2 **Solvent Removable Penetrants:**

Excess penetrant shall be removed by wiping with a cloth or absorbent paper repeating the operation until most tracesof penetrants have been removed. The remaining traces shall be removed by wiping the surface lightly with cloth or absorbent paper moistened with solvent.

Caution: Care shall be taken to avoid excess solvent as this may remove penetrants from discontinuities. Flushing the surface with solvent following the application of the penetrant and prior to developing is prohibited.

5.4.3 **Water Washable Penetrants:**

Excess water washable penetrant shall be removed with a water spray. The water pressure shall not exceed 0.35 N/mm² (50 Psi) and the water temperature shall not exceed 43.3°C (110°F).

5.5 **Drying:**

Surface shall be dried before the application of developer.

5.5.1 a) If postemulsifying or water washable method is used, the surface shall be dried by blotting with clean materials or by using circulating warm air, provided the temperature of the surface is not raised above 50°C (125°F).

b) For solvent removable method, the surface may be dried by normal evaporation, blotting, wiping or forced air.

5.6 **Application Of Developer:**

The developer shall be applied as soon as possible after the removal of the excess penetrant. Two types of developer, dry or wet,shall be used with fluorescent penetrant. With colour contrast penetrants, only wet developer shall be used.

5.6.1 **Application Of Dry Developer:**

Dry developer shall be applied by a soft brush, a hand operated powder bulb or a powder gun or other means provided the powder is dusted evenly over the entire surface being examined.

5.6.2 **Application Of Wet Developer**

Prior to applying suspension type wet developer to the surface, the developer must be thoroughly agitated to ensure adequate dispersion of suspended particles.

COPYRIGHT AND CONFIDENTIAL
The information on this document is the property of BHARAT HEAVY ELECTRICALS LIMITED.
It must not be used directly or indirectly in any way detrimental to the interest of the company.

CS-757

(a) **Aqueous Developer Application:**

Aqueous developer may be applied to either a wet or dry surface. It shall be applied by dipping, spraying or other means provided a thin coating is obtained over the entire surface being examined. Drying time may be decreased by using warm air, provided the surface temperature of the part is not raised above 50°C.

(b) **Non-aqueous Developer Application:**

Non-aqueous developer shall be applied only on a dry surface. It shall be applied by spraying, except where safety or restricted access preclude it. Under such conditions developer may be applied by brushing. Drying shall be by normal evaporation.

6.0 **EXAMINATION:**

Observe the surface during the application of the developer to detect nature of any indications which tend to bleed out profusely. Final examination shall be done between 7 minutes at the earliest and 30 minutes at the latest after application of the developer. The nature of discontinuities corresponding to the indications shall be defined depending upon the method of setting, appearance, direction, shape and dimensions of the same. If the bleed out does not alter the examination results, longer periods are permitted. If the surface to be examined is large enough to preclude complete examination within the prescribed time the surface shall be examined in increments.

6.1 **Colour Contrast Penetrants (Visible Dye Penetrants):**

6.1.1 With colour contrast penetrants the developer forms a reasonably uniform coating. Surface discontinuities are indicated by bleeding out of the penetrant which is normally of a deep red colour. Indication with a light pink colour may indicate excessive cleaning. Inadequate cleaning may leave an excessive background making interpretation difficult.

6.1.2 Adequate illumination is required to ensure no loss of the sensitivity in the examination. Examination shall be done under natural or suitable light (illumination level shall be in the order of 500 LUX).

6.2 **Fluorescent Penetrants:**

Examination of the surface shall be carried out with a high intensity black light in a darkened area or booth. Black light shall have a wave length of 3650 A°. The bulbs shall be allowed to warm up for not less than 5 minutes prior to use in the examination. The black light intensity shall be at least of 800 uW/cm^2 on the surface of the part being examined and the light source being kept at a distance of at least 375 mm from the surface being examined. The operator should allow his eyes to become accustomed to the darkness of the inspection booth for at least 5 minutes before inspecting the parts. He should avoid looking directly into the black light and also avoid going from the darkness to

COPYRIGHT AND CONFIDENTIAL
The information on this document is the property of BHARAT HEAVY ELECTRICALS LIMITED.
ust not be used directly or indirectly in any way detrimental to the interest of the compa

the light and back again without allowing sufficient time for his eyes to adjust to the darkness. The intensity shall be measured at least once every 8 hours and whenever the work station is changed.

7.0 **EVALUATION OF INDICATIONS & INTERPRETATION:**

7.1 As the developer dries to a smooth, even white coating, indications will appear at the locations of discontinuities. Depth of surface discontinuities may be correlated with the richness of colour and speed of bleeding out. However, localised surface imperfections such as may occur from machining marks or surface conditions may produce similar indications which are non-relevant.

7.2 Usually, a crack or similar opening will show a line and light cracks or partially welded lap will show a broken line. Gross porosity may produce large indications covering an entire area. Very fine porosity is indicated by random dots.

7.3 Any non-relevant indication shall be regarded as a defect until the indication is either eliminated by surface conditioning or it is Proved non-relevant by other NDT methods.

7.4 Linear indications are those indications in which the length is more than three times the width. Rounded indications are indications which are circular or elliptical with the length less than three times the width.

7.5 All indications shall be evaluated in terms of the acceptance standards of the referencing documents.

8.0 **ACCEPTANCE STANDARDS:**

8.1 For castings - Refer Corporate Standard AA 085 01 32.

8.2 For Austenitic Forgings - Refer Corporate Standard AA 085 01 30.

8.3 For Welds - Refer Corporate Standard AA 085 01 29.

9.0 **POST EXAMINATION CLEANING:**

Surfaces examined shall be cleaned after evaluation of the test with dry cotton rag with or without water rinse.

TABLE - 1 (Clause 5.3.2)

Suggested Penetration Time For Post-emulsified And Solvent Removable Penetrants

Material	Form	Type of discontinuity	*Penetration time (min.)
Aluminium	Castings	Porosity	5
		Cold shut	5
	Extrusions & Forgings	Laps	10
		Lack of fusion	5
	Welds	Porosity	5
	All forms	Cracks	10

COPYRIGHT AND CONFIDENTIAL
The information on this document is the property of BHARAT HEAVY ELECTRICALS LIMITED.
It must not be used directly or indirectly in any way detrimental to the interest of the company.

CS-757

CORPORATE STANDARD

TABLE - 1 (Clause 5.3.2) Contd.

Material	Form	Type of dis-continuity	*Penetration time (min.)
Magnesium	Castings	Porosity	5
		Cold shut	5
	Extrusions & Forgings	Laps	10
		Lack of fusion	10
	Welds	Porosity	10
	All forms	Cracks	10
Steel	Castings	Porosity	10
		Cold shut	10
	Extrusions & Forgings	Laps	10
		Lack of fusion	20
	Welds	Porosity	20
	All forms	Cracks	20
Brass & Bronze	Castings	Porosity	5
		Cold shut	5
	Extrusions & Forgings	Laps	10
		Lack of fusion	10
	Brazed parts	Porosity	10
	All forms	Cracks	10
Plastics	All forms	Cracks	5
Glass	All forms	Cracks	5
Carbide tipped tools	All forms	Lack of fusion	5
		Porosity	5
		Crack	20
Titanium & high temperature alloys	All forms		20 to 30
Ceramic	All forms	Cracks	5
		Porosity	5

* For lower temperatures, penetration time should be increased.

ANNEXURE - 1 (Clause 5.3.3)

PROCEDURE FOR NON-STANDARD TEMPERATURES

A.1 **General:**

When it is not practical to conduct a liquid penetrant examination within the temperature range of 15.6 to 51.6°C (60 to 125°F), the examination procedure at the proposed lower or higher temperature range requires qualification. This shall require the use of a quench cracked aluminium block, which is designated as 'Liquid Penetrant Comparator Block'.

COPYRIGHT AND CONFIDENTIAL
The information on this document is the property of BHARAT HEAVY ELECTRICALS LIMITED.
It not be used directly or indirectly in any way detrimental to the interest of the compan

A.2 **Liquid Penetrant Comparator Block:**

The liquid penetrant comparator block shall be made of aluminum, ASTM B209, Type 2024 or SB-211. Type 2024, 10 mm (3/8 in.) thick, and shall have approximate face dimensions of 50 mm x 75 mm (2 in. x 3 in.). At the centre of each face, an area approximately 25 mm in diameter shall be marked with a 510°C (950°F) temperature indicating crayon or paint. The marked area shall be heated with a blow torch, a Bunsen burner or similar device to a temperature between 510°C (950°F) and 524°C (975°F). The specimen shall then be immediately quenched in cold water which produces a network of the fine cracks on each face. The block shall then be dried by heating to approximately 149°C (300°F). After cooling, the block shall be cut into two halves. One half of the specimen shall be designated block 'A' and the other block 'B' for identification in subsequent processing. Figure 1 illustrates the comparator blocks "A" and "B". As an alternate to cutting the block in half to make blocks "A" and "B", separate blocks 50 mm x 75 mm (2 in. x 3 in.) can be made using the heating and quenching technique as described above. Two comparator blocks with closely matched crack patterns may be used. The blocks shall be marked "A" and "B".

A.3 **Comparator Application:**

(a) If it is desired to qualify a liquid penetrant examination procedure at a temperature of less than 15.6°C (60°F) the proposed procedure shall be applied to block "B" after the block and all materials have been cooled and held at the proposed examination temperature until the comparison is completed. A standard procedure which has previously been demonstrated as suitable for use shall be applied to block "A" in the 15.6 to 51.6°C (60 to 125°F) temperature range. The indications of cracks shall be compared between blocks "A" and "B". If the indications obtained under the proposed condition on block "B" are essentially the same as obtained on block "A" during examination at 15.6 to 51.6°C (60 to 125°F), the proposed procedure shall be considered qualified for use.

(b) If the proposed temperature for the examination is above 51.6°C (125°F), block "B" shall be held at this temperature throughout the examination. The indication of cracks shall be compared as described in T-647.3(a) while block "B" is at the proposed temperature and block "A" is at the 15.6 to 51.6°C (60 to 125°F) temperature range.

(c) A procedure qualified at a temperature lower than 15.6°C (60°F) shall be qualified from that temperature to 15.6°C (60°F).

(d) To qualify a Procedure for temperatures above 51.6°C (125°F), the upper and lower temperature limits shall be established and the procedure qualified at these temperatures.

(e) As an alternate to the requirements of (a) and (b) when using color contrast penetrants, it is permissible to use a single comparator block for the standard and non-standard temperatures and to make the comparison by photography.

COPYRIGHT AND CONFIDENTIAL
The information on this document is the property of BHARAT HEAVY ELECTRICALS LIMITED.
It must not be used directly or indirectly in any way detrimental to the interest of the company.

CS-757

CORPORATE STANDARD

(f) When the single comparator block and photographic technique is used, the processing details (as applicable) described in (a) and (b) above shall apply. The block shall be thoroughly cleaned between the two processing steps. Photographs shall be taken after processing at the nonstandard temperature and then after processing at the standard temperature. The indication of cracks shall be compared between the two photographs. The same criteria for qualification as (a) above shall apply.

(g) Identical photographic techniques shall be used to make the comparison photographs.

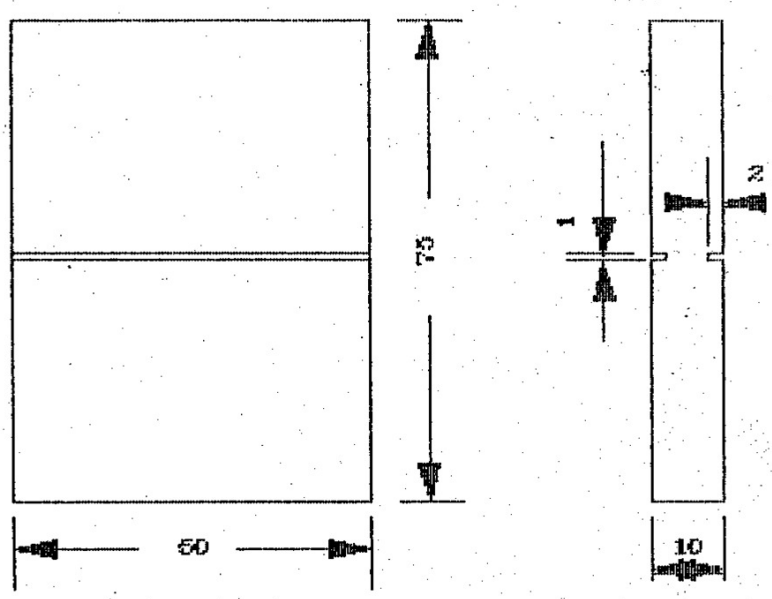

FIGURE: 1-LIQUID PENETRANT COMPARATOR BLOCK

COPYRIGHT AND CONFIDENTIAL
The information on this document is the property of BHARAT HEAVY ELECTRICALS LIMITED.
It must not be used directly or indirectly in any way detrimental to the interest of the company.

757-55

EVALUATION AND ACCEPTANCE STANDARD FOR LIQUID PENETRANT EXAMINATION OF CASTINGS

1.0 SCOPE:

1.1 This standard is applicable for Liquid Penetrant examination of castings.

1.2 The procedure adopted for this examination is as per Corporate Standard AA 085 01 31

2.0 DEFINITION OF INDICATIONS:

2.1 Circular indications are those, more or less elliptical with major axis not more than three times the minor axis.

2.2 Linear indications are those, having length in excess of three times the average width.

2.3 In-line indications are those, in group of three or more indications aligned side by side in line with intervening gaps of less than 2mm measured edge to edge.

3.0 EVALUATION OF INDICATIONS:

3.1 Defects which occur as mechanical discontinuities at the surface will be indicated by the bleeding out of the penetrant, however, localised surface imperfections such as may occur from machining marks or surface conditions may produce similar indications which are not relevant to the detection of defects.

3.2 Any indication which is suspected to be non-relevant is to be considered relevant till it is proved otherwise.

3.3 Relevant indications are those which result from mechanical discontinuities. Linear indications are those indications in which the length is more than three times the width. Rounded indications are those indications which are circular or elliptical with the length less than three times the width.

3.4 Indications measuring less than 1.5mm across shall not be taken into consideration unless they are clustered in group of more than 4 Nos. with intervening gap of less than the largest dimensions of adjacent flaws. Such clusters shall be evaluated as single defect.

COPYRIGHT AND CONFIDENTIAL
The information on this document is the property of BHARAT HEAVY ELECTRICALS LIMITED.
It must not be used directly or indirectly in any way detrimental to the interest of the company.

CS-9345

Revision			Approved: INTERPLANT NON-DESTRUCTIVE TESTING COMMITTEE		
Rev. No. 00	Amd. No. 01	Reaffirmed	Prepared	Issued	Date
DT.	DT. 29.10.99	year.	Corp. R&D	CORP : R & D	10 SEPT 79

4.0 ACCEPTANCE STANDARDS:

Castings are classified into four levels, as details below, according to the size and number of flaws permissible.

(01)

Level	No. of acceptable indications per 100 sq. cm. surface area of length not exceeding 25cm.	~~Unacceptable~~ Linear defects.
I	2 Nos. of 3mm circular indication.	Crack and hot tears.
II	3 Nos. of 3mm circular indication. One 5mm circular or linear indication.	-do-
III	3 Nos. of 3mm circular indication. 2 Nos. of 4mm circular indication. One 6mm circular or linear indication. One in-line indication of 10mm maximum length.	-do-
IV	4 Nos. of 3mm circular indication. 3 Nos. of 4mm circular indication. 2 Nos. of 8mm circular or linear indication. One in-line indication of 15mm maximum length.	-do-

Note: The minimum permissible distance between any two or more acceptable individual flaws shall not be less than the major dimension of the larger flaw.

COPYRIGHT AND CONFIDENTIAL
The information on this document is the property of BHARAT HEAVY ELECTRICALS LIMITED.
It must not be used directly or indirectly in any way detrimental to the interest of the company.

CS-0345

MANUFACTURER'S NAME AND ADDRESS			QUALITY PLAN			TO BE FILLED BY BHEL	TO BE FILLED BY BHEL
BHEL	VENDOR'S NAME	ITEM		QP NO.			
				REV			
		DRG. NO.	AS PER PO				
		SPEC.	AS PER PO				
		REV		Page 1 of 1			

SL. NO.	COMPONENT & OPERATIONS	CHARACTERISTICS	CLASS	TYPE OF CHECK	QUANTUM OF CHECK	REFERENCE DOCUMENT	ACCEPTANCE NORMS	FORMAT OF RECORDS		AGENCY			REMARKS
										M	B	N	
1	2	3	4	5	6	7	8	9	D	10			11

		LEGEND: ! RECORDS IDENTIFIED WITH 'TICK' SHALL BE ESSENTIALLY INCLUDED BY CONTRACTOR IN QA DOCUMENTATION. M: MANUFACTURER / SUBCONTRACTOR B: BHEL / NOM. INSPECTION AGENCY N: CUSTOMER INDICATE 'P' PERFORM 'W' WITNESS AND 'V' VERIFICATION	FOR CUSTOMER USE	
MANUFACTURER/SUBCONTRACTOR		ALL 'W' INDICATED IN COLUMN 'N' SHALL BE 'CHP' OF CUSTOMER		APPROVED BY

CERTIFICATE OF NO DEVIATION

(To be Typed & submitted in the Letter Head of the Company/Firm of Bidder)

To,
MANGER
PPX-DABG
BHEL-HEEP, HARIDWAR

Dear Sir,

Subject: No Deviation Certificate

Ref: 1) GeM Bid No. .....,
2) All other pertinent issues till date

We hereby confirm that we have not changed/ modified/materially altered any of the tender documents as downloaded from the website/ issued by BHEL and in case of such observance at any stage, it shall be treated as null and void.

We also hereby confirm that we have neither set any Terms and Conditions and nor have we taken any deviation from the Tender conditions together with other references applicable for the above referred GeM Bid.

We further confirm our unqualified acceptance to all Terms and Conditions, unqualified compliance to Tender Conditions.

We confirm to have submitted offer in accordance with tender instructions and as per aforesaid references.

Thanking you,

Yours faithfully,

(Signature, date & seal of authorized representative of the bidder)

Date:
Place:

DECLARATION REGARDING MINIMUM LOCAL CONTENT IN LINE WITH REVISED PUBLIC PROCUREMENT (PREFERENCE TO MAKE IN INDIA), Order 2017" Dt. 19.07.2024 issued vide Order No. P-45021/2/2017-PP(BE-II)-Part(4)Vol.II AND SUBSEQUENT ORDER(S)

(To be typed and submitted in the Letter Head of the Entity/Firm providing certificate as applicable)

To,
Manager
PPX-DABG
BHEL-HEEP, HARIDWAR

Dear Sir,

Sub: Declaration reg. minimum local content in line with Public Procurement (Preference to Make in India), Order 2017" Dt. 19.07.2024 issued vide Order No. P-45021/2/2017-PP(BE-II)-Part(4) Vol.II and subsequent order(s).

Ref: 1) GeM Bid Specification No: .....
2) All other pertinent issues till date

We hereby certify that the items/works/services offered by..... *(specify the name of the organization here)* has a local content of _____ % and this meets the local content requirement for **'Class-I local supplier' / 'Class II local supplier'** (*Strike out whichever is not applicable*) as defined in Public Procurement (Preference to Make in India), Order 2017-Revision dated 04.06.2020 issued by DPIIT and subsequent order(s).

The details of the location(s) at which the local value addition is made are as follows:

1. _____ 2. _____
3. _____ 4. _____ ...

Thanking you,
Yours faithfully,

(Signature, Date & Seal of Authorized Signatory of the Bidder)

Note:

1. Bidders to note that above format, duly filled & signed by authorized signatory, shall be submitted along with the techno-commercial offer.
2. In case the bidder's quoted value is in excess of Rs. 10 crores, the authorized signatory for this declaration shall necessarily be the statutory auditor or cost auditor of the company (in the case of companies) or a practising cost accountant or practicing chartered accountant (in respect of suppliers other than companies).
3. In the event of false declaration, actions as per the above order and as per BHEL Guidelines shall be initiated against the bidder.

Buyer Added Bid Specific Additional Terms & Conditions (ATC)	
1.	**PRE QUALIFICATION CRITERIA: AS PER ENCLOSED PQR CHECKLIST**
2.	**SCOPE OF SUPPLY: AS PER ANNEXURE - A**
3.	**PRICE BASIS:** Price in INR should be quoted for FOR BHEL HEEP HARIDWAR basis
4.	**TAXES & DUTIES:** **4.1** The Supplier/Vendor shall pay all (save the specific exclusions as enumerated in this clause) taxes, fees, license, charges, deposits, duties, tools, royalty, commissions, other charges, etc. which may be levied on the input goods & services consumed and output goods & services delivered in course of his operations in executing the contract. In case BHEL is forced to pay any of such taxes/duties, BHEL shall have the right to recover the same from his bills or otherwise as deemed fit along with the applicable overheads @5% and interest on the total value (i. e. amount paid by BHEL + overhead) However, provisions regarding **GST** on output supply (goods/service) and TDS/TCS as per Income Tax Act shall be as per following clauses. **4.2 GST (Goods and Services Tax)** **4.2.1** Reimbursement of GST is subject to compliance of following terms and conditions. BHEL shall have the right to deny payment of GST and to recover any loss to BHEL on account of tax, interest, penalty etc. for non-compliance of any of the following condition. **4.2.2** The admissibility of GST, taxes and duties referred in this chapter or elsewhere in the contract shall be limited to direct transactions between BHEL & its Supplier/Vendor. BHEL shall not consider GST on any transaction other than the direct transaction between BHEL & its Supplier/Vendor. **4.2.3** Supplier/Vendor shall obtain prior written consent of BHEL before billing the amount towards such taxes. Where the GST laws permit more than one option or methodology for discharging the liability of tax/levy/duty, BHEL shall have the right to adopt the appropriate one considering the amount of tax liability on BHEL/Client as well as procedural simplicity with regard to assessment of the liability. The option chosen by BHEL shall be binding on the Contractor for discharging the obligation of BHEL in respect of the tax liability to the Supplier/Vendor. **4.2.4** Supplier/Vendor has to submit GST registration certificate of the concerned state. Supplier/Vendor also needs to ensure that the submitted GST registration certificate should be in active status during the entire contract period. **4.2.5** Supplier/Vendor has to issue Invoice/Debit Note/Credit Note indicating HSN/SAC code, Description, Value, Rate, applicable tax and other particulars in compliance with the provisions of relevant GST Act and Rules made thereunder. **4.2.6** Supplier/Vendor has to submit GST compliant invoice within the due date of invoice as per GST Law. In case of delay, BHEL reserves the right of denial of GST payment if there occurs any hardship to BHEL in claiming the input thereof. In case of goods, Supplier/Vendor has to provide scan copy of invoice & GR/LR/RR to BHEL before movement of goods starts to enable BHEL to meet its GST related compliances. Special care should be taken in case of month end transactions.

4.2.7 Supplier/Vendor has to ensure that invoice in respect of such services which have been provided/completed on or before end of the month should not bear the date later than last working day of the month in which services are performed.

4.2.8 Subject to other provisions of the contract, GST amount claimed in the invoice shall be released on fulfilment of all the following conditions by the Supplier/Vendor: -

a) Supply of goods and/or services have been received by BHEL.
b) Original Tax Invoice has been submitted to BHEL.
c) Supplier/Vendor has submitted all the documents required for processing of bill as per contract/ purchase order/ work order.
d) In cases where e-invoicing provision is applicable, Supplier/Vendor is required to submit invoice in compliance with e-invoicing provisions of GST Act and Rules made thereunder.
e) Supplier/Vendor has filed all the relevant GST return (e.g. GSTR-1, GSTR-3B, etc.) pertaining to the invoice submitted and submit the proof of such return along with immediate subsequent invoice. In case of final invoice/ bill, contractor has to submit proof of such return within fifteen days from the due date of relevant return.
f) Respective invoice has appeared in BHEL's GSTR - 2A for the month corresponding to the month of invoice and in GSTR-2B of the month in which such invoices has been reported by the contractor along with status of ITC availability as "YES" in GSTR-2B. Alternatively, BG of appropriate value may be furnished which shall be valid at least one month beyond the due date of confirmation of relevant payment of GST on GSTN portal or sufficient security is available to adjust the financial impact in case of any default by the Supplier/Vendor.
g) Supplier/Vendor has to submit an undertaking confirming the payment of all due GST in respect of invoices pertaining to BHEL.

4.2.9 Any financial loss arises to BHEL on account of failure or delay in submission of any document as per contract/purchase order/work order at the time of submission of Tax invoice to BHEL, shall be deducted from Supplier/Vendor's bill or otherwise as deemed fit.

4.2.10 TDS as applicable under GST law shall be deducted from Supplier/Vendor's bill.

4.2.11 Supplier/Vendor shall comply with the provisions of e-way bill wherever applicable. Further wherever provisions of GST Act permits, all the e-way bills, road permits etc. required for transportation of goods needs to be arranged by the contractor.

4.2.12 Supplier/Vendor shall be solely responsible for discharging his GST liability according to the provisions of GST Law and BHEL will not entertain any claim of GST/interest/penalty or any other liability on account of failure of Supplier/Vendor in complying the provisions of GST Law or discharging the GST liability in a manner laid down thereunder.

4.2.13 In case declaration of any invoice is delayed by the vendor in his GST return or any invoice is subsequently amended/altered/deleted on GSTN portal which results in any adverse financial implication on BHEL, the financial impact thereof including interest/penalty shall be recovered from the Supplier/Vendor's due payment.

4.2.14 Any denial of input credit to BHEL or arising of any tax liability on BHEL due to noncompliance of GST Law by the Supplier/Vendor in any manner, will be recovered along with liability on account of interest and penalty (if any) from the payments due to the Supplier/Vendor.

	4.2.15 In the event of any ambiguity in GST law with respect to availability of input credit of GST charged on the invoice raised by the contractor or with respect to any other matter having impact on BHEL, BHEL's decision shall be final and binding on the Supplier/Vendor. **4.2.16 <u>Variation in Taxes & Duties</u>:** Any upward variation in GST shall be considered for reimbursement provided supply of goods and services are made within schedule date stipulated in the contract or approved extended schedule for the reason solely attributable to BHEL. However downward variation shall be subject to adjustment as per actual GST applicability. In case the Government imposes any new levy/tax on the output service/goods after price bid opening, the same shall be reimbursed by BHEL at actual. The reimbursement under this clause is restricted to the direct transaction between BHEL and its Supplier/Vendor only and within the contractual delivery period only. a) In case any new tax/levy/duty etc. becomes applicable after the date of Bidder's offer but before opening of the price Bid, the Bidder/ Supplier/Vendor must convey its impact on his price duly substantiated by documentary evidence in support of the same before opening of price bid. Claim for any such impact after opening the price bid will not be considered by BHEL for reimbursement of tax or reassessment of offer. **4.3 <u>Income Tax</u>:** **TDS/TCS** as applicable under Income Tax Act, 1961 or rules made thereunder shall be deducted/collected from Supplier/Vendor's bill.
5.	**MATERIAL DISPATCH CLEARANCE CERTIFICATE:** AS PER ENQUIRY
6.	**<u>INSPECTION / INSPECTION & TESTING AT SUPPLIERS WORKS:</u>** AS PER ENQUIRY
7.	**<u>DELIVERY PERIOD:</u> AS PER ANNEXURE - A**
8.	**<u>TRANSIT INSURANCE:</u>** Transit Insurance of material is in Supplier/Vendor's scope. Supplier/Vendor shall insure the material at their cost for transportation.
9.	**<u>a) PAYMENT TERMS:</u>** i. **FOR NON-MSME BIDDERS:** 100% PAYMENT ALONG WITH TAXES, FREIGHT & INSURANCE WILL BE MADE AFTER RECEIPT AND ACCEPTANCE OF MATERIAL AND WITHIN 90 DAYS FROM THE DATE OF RECEIPT SUBJECT TO SUBMISSION OF NON-DISCREPANT DOCUMENTS. (MSME MEANS MICRO, SMALL & MEDIUM ENTERPRISES) (THIS IS IN SUPERSESSION OF 10 DAYS' TIME AS PROVIDED IN CLAUSE 12 OF GEM GTC). ii. **FOR MSE BIDDER:** FOR MSES (COVERED UNDER MSME ACT), 100% PAYMENT ALONG WITH TAXES, FREIGHT & INSURANCE WILL BE MADE AFTER RECEIPT AND ACCEPTANCE OF MATERIAL AND WITHIN 45 DAYS FROM THE DATE OF RECEIPT SUBJECT TO SUBMISSION OF NON-DISCREPANT DOCUMENTS OR AS PRESCRIBED IN THE RELEVANT ACT. BENEFITS OF MSE (SUCH AS EMD WAIVER, TENDER FEE EXEMPTION, PRICE PREFERENCE, PAYMENT PREFERENCE ETC.) WILL BE GIVEN ONLY TO THOSE MSE VENDORS WHO ARE MANUFACTURERS OF OFFERED ITEMS AGAINST THE NIT. NO MSE BENEFITS SHALL BE PROVIDED TO AGENTS / STOCKISTS /DEALERS / TRADERS ETC. FOR THE ITEMS OFFERED BUT NOT MANUFACTURED BY THEMSELVES." iii. **FOR MEDIUM ENTERPRISES:** 100% PAYMENT ALONG WITH TAXES, FREIGHT & INSURANCE WILL BE MADE AFTER RECEIPT AND ACCEPTANCE OF MATERIAL AND WITHIN 60 DAYS FROM THE DATE OF RECEIPT SUBJECT TO SUBMISSION OF NON-DISCREPANT DOCUMENTS AS PER TERMS AND CONDITIONS OF PURCHASE ORDER.

	iv. PLEASE NOTE THAT VENDOR TO ADHERE TO THE PAYMENT TERMS AS PER ABOVE. NO DEVIATION IN PAYMENT TERMS SHALL BE ACCEPTED. VENDOR TO SUBMIT THEIR OFFER ACCORDINGLY. v. However, GST amount shall be reimbursed in line with compliance to Cl. No. 4 (Taxes & Duties) above. vi. IT MAY BE NOTED THAT STANDARD PAYMENT TIMELINE/TERMS AS MENTIONED/PRINTED IN THE GEM BID SHALL NOT BE APPLICABLE. PAYMENT TERMS SHALL BE AS PER ABOVE ONLY. **b) NO INTEREST PAYABLE TO CONTRACTOR:** No interest shall be payable on the security deposit or any other money due to the contractor".
10.	**DOCUMENTS REQUIRED ALONG WITH DISPATCH OF MATERIAL/BILLING DOCUMENTS**: The following documents are required to be sent with material dispatch/Billing Documents: • Original Tax Invoice (As per Cl. No. 4 above). • Copy of LR. • GST COMPLIANCE CERTIFICATE • Warranty / Guarantee Certificate. • Certificate of compliance • TEST CERTIFICATES
11.	**BANK DETAILS FOR EMD & PERFORMANCE SECURITY SUBMISSION:** NOT APPLICABLE
12.	**EMD**: ~~Applicable~~ / Not Applicable.
13.	**PERFORMANCE SECURITY:** ~~Applicable~~ / Not Applicable.
14.	**BREACH OF CONTRACT, REMEDIES AND TERMINATION:** **14.1** The following shall amount to breach of contract: I. Non-supply of material/ non-completion of work by the Supplier/Vendor within scheduled delivery/ completion period as per contract or as extended from time to time. II. The Supplier/Vendor fails to perform as per the activity schedule and there are sufficient reasons even before expiry of the delivery/ completion period to justify that supplies shall be inordinately delayed beyond contractual delivery/ completion period. III. The Supplier/Vendor delivers equipment/ material not of the contracted quality. IV. The Supplier/Vendor fails to replace the defective equipment/ material/ component as per guarantee clause. V. Withdrawal from or abandonment of the work by the Supplier/Vendor before completion as per contract. VI. Assignment, transfer, subletting of Contract by the Supplier/Vendor without BHEL's written permission resulting in termination of Contract or part thereof by BHEL. VII. Non-compliance to any contractual condition or any other default attributable to Supplier/Vendor. VIII. Any other reason(s) attributable to Vendor towards failure of performance of contract. In case of breach of contract, BHEL shall have the right to terminate the Purchase Order/ Contract either in whole or in part thereof without any compensation to the Supplier/Vendor. IX. Any of the declarations furnished by the contractor at the time of bidding and/ or entering into the contract for supply are found untruthful and such declarations were

of a nature that could have resulted in non-award of contract to the contractor or could expose BHEL and/ or Owner to adverse consequences, financial or otherwise.

X. Supplier/Vendor is convicted of any offence involving corrupt business practices, antinational activities or any such offence that compromises the business ethics of BHEL, in violation of the Integrity Pact entered into with BHEL has the potential to harm the overall business of BHEL/ Owner.

Note- Once BHEL considers that a breach of contract has occurred on the part of Supplier/Vendor, BHEL shall notify the Supplier/Vendor by way of notice in this regard. Contractor shall be given an opportunity to rectify the reasons causing the breach of contract within a period of 14 days.

In case the contractor fails to remedy the breach, as mentioned in the notice, to the satisfaction of BHEL, BHEL shall have the right to take recourse to any of the remedial actions available to it under the relevant provisions of contract.

14.2 <u>Remedies in case of Breach of Contract.</u>

i Wherein the period as stipulated in the notice issued under clause 14.1 has expired and Supplier/Vendor has failed to remedy the breach, BHEL will have the right to terminate the contract on the ground of "Breach of Contract" without any further notice to contractor.

ii Upon termination of contract, BHEL shall be entitled to recover an amount equivalent to 10% of the Contract Value for the damages on account of breach of contract committed by the Supplier/Vendor. This amount shall be recovered by way of encasing the security instruments like performance bank guarantee etc. available with BHEL against the said contract. In case the value of the security instruments available is less than 10% of the contract value, the balance amount shall be recovered from other financial remedies (i.e. available bills of the Supplier/Vendor, retention amount, from the money due to the Supplier/Vendor etc. with BHEL) or the other legal remedies shall be pursued.

iii wherever the value of security instruments like performance bank guarantee available with BHEL against the said contract is 10% of the contract value or more, such security instruments to the extent of 10% contract value will be encashed. In case no security instruments are available or the value of the security instruments available is less than 10% of the contract value, the 10% of the contract value or the balance amount, as the case may be, will be recovered in all or any of the following manners:

iv In case the amount recovered under sub clause (a) above is not sufficient to fulfil the amount recoverable then; a demand notice to deposit the balance amount within 30 days shall be issued to Supplier/Vendor.

v) If Supplier/Vendor fails to deposit the balance amount within the period as prescribed in demand notice, following action shall be taken for recovery of the balance amount:

a) from dues available in the form of Bills payable to defaulted Supplier/Vendor against the same contract.

b) If it is not possible to recover the dues available from the same contract or dues are insufficient to meet the recoverable amount, balance amount shall be recovered from any money(s) payable to Supplier/Vendor under any contract with other Units of BHEL including recovery from security deposits or any other deposit available in the form of security instruments of any kind against Security deposit or EMD.

vi) In-case recoveries are not possible with any of the above available options, Legal action shall be initiated for recovery against defaulted supplier/Vendor.

vii) It is an agreed term of contract that this amount shall be a genuine pre-estimate of damages that BHEL would incur in completion of balance contractual obligation of the contract through any other agency and BHEL will not be required to furnish any other evidence to the Supplier/Vendor for the purpose of estimation of damages.

viii) In addition to the above, imposition of liquidated damages, debarment, termination, de-scoping, short-closure, etc., shall be applied as per provisions of the contract.

Note:

1) The defaulting Supplier/Vendor shall not be eligible for participation in any of the future enquiries floated by BHEL to complete the balance work. The defaulting contractor shall mean and include:

(a) In case defaulted Supplier/Vendor is the Sole Proprietorship Firm, any Sole Proprietorship Firm owned by same Sole Proprietor.

(b) In case defaulted Supplier/Vendor is The Partnership Firm, any firm comprising of same partners/ some of the same partners; or sole proprietorship firm owned by any partner(s) as a sole proprietor.

LD against delay in executed supply in case of Termination of Contract:

LD against delay in executed supply shall be calculated in line with LD clause no. 18.0 below, for the delay attributable to Supplier/Vendor. For limiting the maximum value of LD, contract value shall be taken as Executed Value of supply till termination of contract.

Method for calculation of "LD against delay in executed supply in case of termination of contract" is given below.

i. Let the time period from scheduled date of start of supply till termination of contract excluding the period of Hold (if any) not attributable to contractor = T1

ii. Let the value of executed supply till the time of termination of contract= X

iii. Let the Total Executable Value of supply for which inputs/fronts were made available to Supplier/Vendor and were planned for execution till termination of contract = Y

iv. Delay in executed supply attributable to Supplier/Vendor i.e. T2=[1-(X/Y)] x T1

v. LD shall be calculated in line with LD clause (clause 18.0) of the Contract for the delay attributable to Supplier/Vendor taking "X" as Contract Value and "T2" as period of delay attributable to Supplier/Vendor.

15. **BILL TO/ SHIP TO ADDRESS:**

Shipping Address as below:	**Billing address as below:**
Shipping Section, Central Plant Stores, HEEP, BHEL, Haridwar-249403 Uttarakhand, HARIDWAR, UTTARAKHAND-249403, India	HEAVY ELECTRICALS EQUIPMENT PLANT, BHEL, RANIPUR, HARIDWAR, Haridwar, Uttarakhand, 249403 GST No.: 05AAACB4146P1ZL

16. **GUARANTEE/WARRANTY:** Standard Guarantee / Warrantee period of 1 year is applicable from the date of receipt of material at BHEL Haridwar as per Gem GTC.

17. **MICRO AND SMALL ENTERPRISES (MSE):**

Any Bidder falling under MSE category shall furnish the following details & submit documentary evidence/ Govt. Certificate etc. in support of the same along with their techno-commercial offer.

Type under MSE	SC/ST owned	Women owned	Others (excluding SC/ ST & Women Owned)
Micro			
Small			

Note: If the bidder does not furnish the above, offer shall be processed construing that the bidder is not falling under MSE category.

a) MSE suppliers can avail the intended benefits in respect of the procurements related to the Goods and Services only (Definition of Goods and Services as enumerated by Govt. of India vide Office Memorandum F. No. 21(8)/2011-MA dtd. 09/11/2016 office of AS & DC, MSME) only if they submit along with the offer, attested copies of either UDYAM Registration. Date to be reckoned for determining the deemed validity will be the last date of Technical Bid submission. Non-submission of supporting document in GeM portal will lead to consideration of their bids at par with other bidders. No benefits shall be applicable for this enquiry if the above required documents are not uploaded at the time of bid submission. Documents submitted by the bidder shall be verified by BHEL for rendering the applicable benefits.

DIVISION BETWEEN MSE AND NON MSE L1 WILL BE AS BELOW:

If price quoted by MSE vendor is within the price band of L1+15%, then 25% quantity of the respective item (rounded off to nearest number) shall be offered to MSE vendor subject to matching the L1 prices. if the quantity required is 1 number (as such non-divisible), MSE quoting with in price preference of L1+15% shall be offered 100% quantity subject to matching the L1 prices.

MSE/MII: the supplier needs to submit/update MSE/MII credentials on gem portal during profile updation / offer submission stage. the MSE data submitted is cross verified by gem with govt. of INDIA UDYAM/NSIC database through API integration on real time basis and for mii, a self-declaration is being given and authenticated by AADHAR OTP. if the seller fails to claim MSE/MII provision on gem portal at profile updation / bid submission stage, the said seller will become ineligible for getting the MSE/MII benefits for that bid automatically. the vendor can always

18. **LIQUIDATED DAMAGE:**

If the Seller/Service Provider fails to deliver any or all of the Goods/Services within the original/re-fixed delivery period(s) specified in the contract/PO, the Buyer/BHEL will be entitled to deduct/recover the Liquidated Damages for the delay, unless covered under Force Majeure conditions aforesaid, @ 0.5% of the contract value of delayed quantity per week or part of the week of delayed period as pre-estimated damages not exceeding 10% of the contract value of delayed quantity without any controversy/dispute of any sort whatsoever.

19. **INTEGRITY PACT (IP):** ~~Applicable~~ / Not Applicable

20.	**<u>PREFERENCE TO MAKE IN INDIA:</u>** For this procurement, the local content to categorize a Supplier/Vendor as a Class I local supplier/ Class II local Supplier/Non-Local Supplier and purchase preferences to Class I local supplier, is as defined in Public Procurement (Preference to Make in India), Order 2017" Dt. 19.07.2024 issued vide Order No. P-45021/2/2017-PP(BE-II)-Part(4)Vol.II. In case of subsequent orders issued by the nodal ministry, changing the definition of local content for the items of the GeM Bid, the same shall be applicable even if issued after issue of this GeM Bid, but before opening of Part-II bids against this GeM Bid. Suppliers who have qualified and received incentive under PLI scheme will be deemed CLASS-II local suppliers unless they are already CLASS I local suppliers) to encourage indigenization. kindly submit MAKE IN INDIA certificate as per attached format only. **<u>PENAL PROVISIONS FOR FALSE SELF DECLARATION OF MII, IN CASE OF CONTRACT MORE THAN RS 10 CRS.</u>** For contracts valuing more than Rs. 10 crores, local content (in cases of self-certification submitted by bidders at the time of tendering) will be re-verified during execution of contract by cost/ chartered accountant, and in case of defaults, penalty upto 10% of the contract value shall be imposed. For this procurement, the local content to categorize a supplier as a CLASS I local supplier/ CLASS II local supplier/ non-local supplier and purchase preference to class i local supplier, is as defined in public procurement (preference to MAKE IN INDIA), order 2017 dated 19.07.2024 issued by DPIIT. in case of subsequent orders issued by the nodal ministry, changing the definition of local content for the items of the nit, the same shall be applicable even if issued after issue of this NIT, but before opening of PART-II bids against this NIT. **20.1 <u>Compliance to Restrictions under Rule 144 (xi) of GFR 2017:</u>** I. Any bidder from a country which shares a land border with India will be eligible to bid in this tender only if the bidder is registered with the Competent Authority. The Competent Authority for the purpose of this Clause shall be the Registration Committee constituted by the Department for Promotion of Industry and Internal Trade (DPIIT). II. "Bidder" (including the term 'tenderer', 'consultant' or 'service provider' in certain contexts) means any person or firm or company, including any member of a consortium or joint venture (that is an association of several persons, or firms or companies), every artificial juridical person not falling in any of the descriptions of bidders stated hereinbefore, including any agency branch or office controlled by such person, participating in a procurement process. III. "Bidder from a country which shares a land border with India" for the purpose of this Clause means: - a. An entity incorporated established or registered in such a country; or b. A subsidiary of an entity incorporated established or registered in such a country; or

	c. An entity substantially controlled through entities incorporated, established or registered in such a country; or d. An entity whose beneficial owner is situated in such a country; or e. An Indian (or other) agent of such an entity; or f. A natural person who is a citizen of such a country; or g. A consortium or joint venture where any member of the consortium or joint venture falls under any of the above. IV. The beneficial owner for the purpose of (III) above will be as under: 1. In case of a company or Limited Liability Partnership, the beneficial owner is the natural person(s), who, whether acting alone or together or through one or more juridical person, has a controlling ownership interest or who exercises control through other means. Explanation a. "Controlling ownership interest" means ownership of or entitlement to more than twenty-five per cent of shares or capital or profits of the company. b. "Control" shall include the right to appoint majority of the directors or to control the management or policy decisions including by virtue of their shareholding or management rights or shareholders agreements or voting agreements. 2. In case of a partnership firm, the beneficial owner is the natural person(s) who, whether acting alone or together, or through one or more juridical person, has ownership of entitlement to more than fifteen percent of capital or profits of the partnership. In case of an unincorporated association or body of individuals, the beneficial owner is the natural person(s), who, whether acting alone or together, or through one or more juridical person has ownership of or entitlement to more than fifteen percent of the property or capital or profits of the such association or body of individuals. 4. Where no natural person is identified under (1) or (2) or (3) above, the beneficial owner is the relevant natural person who holds the position of senior managing official; 5. In case of a trust, the identification of beneficial owner(s) shall include identification of the author of the trust, the trustee, the beneficiaries with fifteen percent or more interest in the trust and any other natural person exercising ultimate effective control over the trust through a chain of control or ownership. V. An Agent is a person employed to do any act for another, or to represent another in dealings with third person. Note: (i) The bidder shall provide undertaking for their compliance to this Clause. Registration of the bidder with Competent Authority should be valid at the time of submission of bids and at the time of acceptance of the bids.
21.	**Settlement of Dispute** If any dispute or difference of any kind whatsoever shall arise between BHEL and the Supplier/Vendor, arising out of the contract for the performance of the work whether during the progress of contract termination, abandonment or breach of the contract, it shall in the

first place referred to Designated Engineer for amicable resolution by the parties. Designated Engineer (to be nominated by BHEL for settlement of disputes arising out of the contract) who within 60 days after being requested shall give written notice of his decision to the contractor. Save as hereinafter provided, such decision in respect of every matter so referred shall forthwith be given effect to by the Supplier/Vendor who shall proceed with the work with all due diligence, whether he or BHEL desires to resolve the dispute as hereinafter provided or not.

If after the Designated Engineer has given written notice of this decision to the party and no intention to pursue the dispute has been communicated to him by the affected party within 30 days from the receipt of such notice, the said decision shall become final and binding on the parties. In the event the Supplier/Vendor being dissatisfied with any such decision or if amicable settlement cannot be reached then all such disputed issues shall be resolved through conciliation in terms of the BHEL Conciliation Scheme 2018 as per Clause 21.1

21.1 Conciliation:

Any dispute, difference or controversy of whatever nature howsoever arising under or out of or in relation to this Agreement (including its interpretation) between the Parties, and so notified in writing by either Party to the other Party (the "Dispute") shall, in the first instance, be attempted to be resolved amicably in accordance with the conciliation procedure as per BHEL Conciliation Scheme 2018. The proceedings of Conciliation shall broadly be governed by Part III of the Arbitration and Conciliation Act 1996 or any statutory modification thereof and as provided in - "Procedure for conduct of conciliation proceedings" (as available in www.bhel.com)).

Note: Ministry of Finance has issued OM reference No. 1/2/24 dated 03.06.2024 regarding "Guidelines for Arbitration and Mediation in Contracts of Domestic Public Procurement. In the said OM it has been recommended that Government departments/
Entities/agencies are to encourage mediation under the Mediation Act. 2023. The said Act has not yet been notified by the Government. Therefore, the clause "Settlement of Disputes" shall be modified accordingly as and when the Mediation Act 2023 gets notified.

21.2 ARBITRATION:

21.2.1 Except as provided elsewhere in this Contract, in case Parties are unable to reach amicable settlement (whether by Conciliation to be conducted as provided in Clause 21.1 herein above or otherwise) in respect of any dispute or difference; arising out of the formation, breach, termination, validity or execution of the Contract; or, the respective rights and liabilities of the Parties; or, in relation to interpretation of any provision of the Contract; or. in any manner touching upon the Contract (hereinafter referred to as the 'Dispute'), then, either Party may, refer the disputes to Arbitral Institution (to be identified by the contract issuing agency (eg. "IIAC" (India International Arbitration Centre) for Delhi/NCR offices) and such dispute to be adjudicated by Sole Arbitrator appointed in accordance with the Rules of said Arbitral Institution.

21.2.2 A party willing to commence arbitration proceeding shall invoke Arbitration Clause by giving notice to the other party in terms of section 21 of the Arbitration &

Conciliation Act, 1996 (hereinafter referred to as the 'Notice') before referring the matter to arbitral institution. The Notice shall be addressed to the Head of the Region, Power Sector/ Unit, BHEL, executing the Contract and shall contain the particulars of all claims to be referred to arbitration with sufficient detail and shall also indicate the monetary amount of such claim including interest, if any.

21.2.3 After expiry of 30 days from the date of receipt of aforesaid notice, the party invoking the Arbitration shall submit that dispute to the Arbitral Institutions as identified by the contract issuing agency) and that dispute shall be adjudicated in accordance with their respective Arbitration Rules. The matter shall be adjudicated by a Sole Arbitrator who shall necessarily be a Retd. Judge having considerable experience in commercial matters to be appointed/nominated by the respective institution. The cost/expenses pertaining to the said Arbitration shall also be governed in accordance with the Rules of the respective Arbitral Institution. The decision of the party invoking the Arbitration for reference of dispute to a specific Arbitral institution for adjudication of that dispute shall be final and binding on both the parties and shall not be subject to any change thereafter. The institution once selected at the time of invocation of dispute shall remain unchanged.

21.2.4 The fee and expenses shall be borne by the parties as per the Arbitral Institutional rules.

21.2.5 The Arbitration proceedings shall be in English language and the seat and venue of Arbitration shall be HARIDWAR.

21.2.6 Subject to the above, the provisions of Arbitration & Conciliation Act 1996 and any amendment thereof shall be applicable. All matters relating to this Contract and arising out of invocation of Arbitration clause are subject to the exclusive jurisdiction of the Court(s) situated at HARIDWAR.

21.2.7 Notwithstanding any reference to the Designated Engineer or Conciliation or Arbitration herein, a. the parties shall continue to perform their respective obligations under the Contract unless they otherwise agree. Settlement of Dispute clause cannot be invoked by the Contractor, if the Contract has been mutually closed or 'No Demand Certificate' has been furnished by the Contractor or any Settlement Agreement has been signed between the Employer and the Contractor.

21.2.8 It is agreed that Mechanism of resolution of disputes through arbitration shall be available only in the cases where the value of the dispute is less than Rs. 10 Crores.

21.2.9 In case the disputed amount (Claim, Counter claim including. interest is Rs. 10 crores and above, the parties shall be within their rights to take recourse to remedies other than Arbitration, as may be available to them under the applicable laws after prior intimation to the other party. Subject to the aforesaid conditions, provisions of the Arbitration and Conciliation Act, 1996 and any statutory modifications or re-enactment thereof as amended from time to time, shall apply to the arbitration proceedings under this clause.

21.2.10 In case, multiple arbitrations are invoked (whether sub-judice or arbitral award passed) by any party to under this contract, then the cumulative value of claims (including interest claimed or awarded) in all such arbitrations shall be taken in account while arriving at the total claim in dispute for the subject contract for the purpose of clause 21.2.9. Disputes having cumulative value of less than 10 crores shall be resolved through arbitration and any additional dispute shall be adjudicated by the court of competent jurisdiction.

21.3 In case of Contract with Public Sector Enterprise (PSE) or a Government Department, the following shall be applicable:

	In the event of any dispute or difference relating to the interpretation and application of the provisions of commercial contract(s) between Central Public Sector Enterprises (CPSEs)/ Port Trusts inter se and also between CPSEs and Government Departments/Organizations (excluding disputes concerning Railways, Income Tax, Customs & Excise Departments), such dispute or difference shall be taken up by either party for resolution through AMRCD (Administrative Mechanism for Resolution of CPSEs Disputes) as mentioned in DPE OM No. 05/0003/2019-FTS-10937 dated 14-122022 as amended from time to time.
22.	**JURISDICTION** Subject to clause 21 of this contract, the Civil Court having original Civil Jurisdiction HARIDWAR shall alone have exclusive jurisdiction in regard to all matters in respect of the Contract. **GOVERNING LAWS** The contract shall be governed by the Law for the time being in force in the Republic of India.
23.	**<u>Force Majeure</u>** 23.1 "Force Majeure" shall mean circumstance which is: a) beyond control of either of the parties to contract, b) either of the parties could not reasonably have provided against the event before entering into the contract, c) having arisen, either of the parties could not reasonably have avoided or overcome, and d) is not substantially attributable to either of the parties And Prevents the performance of the contract, Such circumstances include but shall not be limited to: i. War, hostilities, invasion, act of foreign enemies. ii. Rebellion, terrorism, revolution, insurrection, military or usurped power, or civil war. iii. Riot, commotion or disorder by persons other than the contractor's personnel and other employees of the contractor and sub-contractors. iv. Strike or lockout not solely involving the contractor's personnel and other employees of the contractor and sub-contractors. v. Encountering munitions of war, explosive materials, ionizing radiation or contamination by radio-activity, except as may be attributable to the contractor's use of such munitions, explosives, radiation or radio- activity. vi. Natural catastrophes such as earthquake, tsunami, volcanic activity, hurricane or typhoon, flood, fire, cyclones etc. vii. Epidemic, pandemic etc. 23.2 The following events are explicitly excluded from Force Majeure and are solely the responsibilities of the non-performing party: a) any strike, work-to-rule action, go-slow or similar labour difficulty (b) late delivery of equipment or material (unless caused by Force Majeure event) and (c) economic hardship.

	23.3 If either party is prevented, hindered or delayed from or in performing any of its obligations under the Contract by an event of Force Majeure, then it shall notify the other in writing of the occurrence of such event and the circumstances thereof within 15 (fifteen) days after the occurrence of such event. 23.4 The party who has given such notice shall be excused from the performance or punctual performance of its obligations under the Contract for so long as the relevant event of Force Majeure continues and to the extent that such party's performance is prevented, hindered or delayed. The Time for Completion shall be extended by a period of time equal to period of delay caused due to such Force Majeure event. 23.5 Delay or non-performance by either party hereto caused by the occurrence of any event of Force Majeure shall not i. Constitute a default or breach of the Contract. ii. Give rise to any claim for damages or additional cost expense occasioned thereby, if and to the extent that such delay or non-performance is caused by the occurrence of an event of Force Majeure. 23.6 BHEL at its discretion may consider short closure of contract after 1 year of imposition of Force Majeure in line with extant guidelines. In any case, Supplier/Vendor cannot consider deemed short-closure after 1 year of imposition of Force Majeure.
24.	**Non-Disclosure Agreement:** ~~Applicable~~ / Not Applicable
25.	**Cartel Formation** The Bidder declares that they will not enter into any illegal or undisclosed agreement or understanding, whether formal or informal with other Bidder(s). This applies in particular to prices, specifications, certifications, subsidiary contracts, submission or non-submission of bids or any other actions to restrict competitiveness or to introduce cartelization in the bidding process. In case, the Bidder is found having indulged in above activities, suitable action shall be taken by BHEL as per extant policies/ guidelines
26.	**Fraud Prevention Policy** Bidder along with its associate /collaborators /sub-contractors /sub-vendors / consultants / service providers shall strictly adhere to BHEL Fraud Prevention Policy displayed on BHEL website http://www.bhel.com and shall immediately bring to the notice of BHEL Management about any fraud or suspected fraud as soon as it comes to their notice.
27.	**Suspension of Business Dealings with Suppliers / Contractors:** The offers of the bidders who are under suspension as also the offers of the bidders, who engage the services of the banned firms / principal / agents, shall be rejected. The list of banned firms is available on BHEL web site www.bhel.com. If any bidder / supplier / contractor during pre-tendering / tendering / post tendering / award / execution / post-execution stage indulges in any act, including but not limited to, malpractices, cheating, bribery, fraud or and other misconduct or formation of cartel so as to influence the bidding process or influence the price or tampers the tendering process or acts or omits in any manner which tantamount to an offence punishable under any provision of the Indian Penal Code, 1860 (Bhartiya Nyaya Samhita 2023) or any other law in force in India, or does anything which is actionable under the Guidelines for Suspension of Business dealings, action may be taken against such bidder / supplier / contractor as per extant guidelines of the company available on www.bhel.com and / or under applicable legal provisions. Guidelines for suspension of business dealings is available in the webpage:

	https://www.bhel.com/guidelines-suspension-business-dealings-supplierscontractors
28.	Bid should be free from correction, overwriting, using corrective fluid, etc. Any interlineation, cutting, erasure or overwriting shall be valid only if they are attested under full signature(s) of person(s) signing the bid else bid shall be liable for rejection. In the event of any Technical or Commercial queries, the same may please be addressed to the following BHEL concerned before Part I opening- Manager/PPX-DABG Email id- akshukla@bhel.in Ph. No. - +91-01334285076 Engr./ PPX-DABG Email id- anupamk@bhel.in Ph. No.- +91- 01334285076
29.	Order of Precedence: In the event of any ambiguity or conflict between the Tender Documents, the order of precedence shall be in the order below: a) Amendments/Clarifications/Corrigenda/Errata etc. issued in respect of the tender documents by BHEL. b) Buyer Added Bid Specific ATC c) GeM Bid Technical Conditions of Contract (TCC) d) GeM GTC
30.	**NOTE:** 1. In the event of our customer order covering this tender being cancelled /placed on hold /otherwise modified, BHEL would be constrained to accordingly cancel / hold / modify the tender at any stage of execution. 2. BHEL may negotiate the L1 rate, if not meeting our budget / estimated cost. BHEL may re-float the tender opened, if L1 price is not acceptable to BHEL even after negotiation. Any deviation from the conditions specified in tender may lead to rejection of offer. 3. Any change in applicable rates of Tax or any other statutory levies (Direct / Indirect) or any new introduction of any levy by means of statute and its corresponding liability for the deliveries beyond the agreed delivery date for reasons not attributable to BHEL will be to vendors account. BHEL will not reimburse the same and any subsequent claim in this respect will be summarily rejected. 4. BHEL reserves its right to reject an offer due to unsatisfactory past performance by the respective Vendor in the execution of any contract to any BHEL project / Unit. 5. The offers of the bidders who are under suspension and also the offers of the bidders, who engage the services of the banned firms /principal/agents, shall be rejected. The list of banned firms is available on BHEL web site www.bhel.com. 6. Recovery / deduction as applicable as per Direct and Indirect taxes as notified by Govt. Of India from time to time will be made and information/certificate for such deduction/recoveries shall be provided by BHEL to the vendor. 7. Rest Terms and Conditions shall be as per GEM (Latest version- applicable at the time of issuance of enquiry) and enquiry ATC (Additional terms & conditions). 8. While generating invoice in GEM portal, the seller must upload scanned copy of GST invoice and the screenshot of GST portal confirming payment of GST. 9. THE PRICE QUOTE BY BIDDER SHOULD BE INCLUSIVE OF GST.

	10. Vendor to upload/submit DIGITILY signed documents to BHEL B2B portal at the time of supply. 11. The tender enquiry has been issued on GEM and BHEL portals for wider circulation. however, the offer is to be submitted through GEM portal only. also, all future corrigendum/corrigenda, addendum/addenda, amendments, time extensions, clarifications, etc. against the published gem bid shall be issued on gem portal only. Hence, the bidders are advised to check GEM portal only for latest updates/amendments/communications issued by BHEL against the current tender. 12. Vendor to offer best delivery schedule in line with BHEL tender requirement. Delivery is not sacrosanct. However, offer of vendors may not be considered whose quoted delivery does not match with BHEL requirement. 13. Data sheet of the product(s) offered in the bid, are to be uploaded along with the bid documents. Buyers can match and verify the data sheet with the product specifications offered. In case of any unexplained mismatch of technical parameters, the bid is liable for rejection. 14. In case vendor (The Proprieter, Partner(s), Director(s) of our Company/Firm) have any relation or relatives employed in BHEL, vendor to inform the same specifically in their offer. 15. Bidder shall submit the following documents along with their bid for vendor code creation: • COPY OF PAN CARD • COPY OF GSTIN • COPY OF MSE CERIFICATE 16. The bids received from same IP address shall be outrightly rejected and shall not be considered for further evaluation. 17. In respect of procurement of goods or services from Micro, Small and Medium enterprises (MSMEs), the settlement of invoice shall be **only through any of the TReDS platform** (i.e RXIL, M1xchange, Invoicemart, KReDX, C2FO), authorised by the Reserve Bank of India. Such MSME suppliers to select their preferred TReDS platform before award of contract. They also will have the option to change the TReDS platform from the drop down menu on Suvidha portal of BHEL, at the time of invoice submission. The routing of invoices through the TReDS platform shall not be construed as mandating discounting of such invoices and the MSMEs supplier shall have the option to avail or not avail financing or discounting of its receivables on the TReDS platform. **In case discounting is not availed by the supplier on TReDS, the trade receivables will be paid through TReDS as per the payment timelines indicated in the contract**. 18. Environmental compliance for transportation vehicles – In case of award of contract against this NIT, it is to be ensured by seller that all vehicles deployed for transportation of material to BHEL premises/ project sites comply with the applicable emission norms prescribed by the Central/State Pollution Control Authorities and other statutory authorities. The vehicles shall possess a valid Pollution Under Control (PUC) Certificate throughout the period of transportation. BHEL reserves the right to verify the validity of the PUC certificate at the time of entry of the vehicle into the premises. Non-compliance may result in denial of entry of the vehicle and any consequential delay shall be to the seller's account."
31.	**Grievance Redressal Mechanism**

	To promote transparency and ensure fair treatment of all bidders, a structured Grievance Redressal Mechanism is in place to address any concerns or issues arising during the tendering process or in subsequent business dealings with the company. Suppliers/Contractors are requested to follow the below escalation process for grievance resolution: 1. First Level: Any grievance should initially be addressed to the designated Dealing Officer, whose contact details are provided in the Notice Inviting Tender (NIT)/Contract. 2. Second Level: If the issue remains unresolved, it may be escalated by lodging a formal grievance through the SUVIDHA Portal: https://suvidha.bhel.in/suvidha/ Responses will be provided in accordance with the defined escalation matrix."
32.	**CONFLICT OF INTEREST AMONG BIDDERS/ AGENTS** "A bidder shall not have conflict of interest with other bidders. Such conflict of interest can lead to anti-competitive practices to the detriment of procuring entity's interests. The bidder found to have a conflict of interest shall be disqualified. A bidder may be considered to have a conflict of interest with one or more parties in this bidding process, if: a) They have controlling partner (s) in common; OR b) They receive or have received any direct or indirect subsidy/ financial stake from any of them; OR c) They have the same legal representative/agent for purposes of this bid; OR d) They have relationship with each other, directly or through common third parties, that puts them in a position to have access to information about or influence on the bid of another bidder; OR e) Bidder participates in more than one bid in this bidding process. participation by a bidder in more than one bid will result in the disqualification of all bids in which the parties are involved. However, this does not limit the inclusion of the components/sub-assembly/ assemblies from one bidding manufacturer in more than one bid; OR f) In cases of agents quoting in offshore procurements, on behalf of their principal manufacturers, one agent cannot represent two manufacturers or quote on their behalf in a particular tender enquiry. one manufacturer can also authorise only one agent/dealer. There can be only one bid from the following: 1. The principal manufacturer directly or through one INDIAN agent on his behalf; AND 2. INDIAN/FOREIGN agent on behalf of only one principal; OR g) A bidder or any of its affiliates participated as a consultant in the preparation of the design or technical specifications of the contract that is the subject of the bid; OR h) In case of a holding company having more than one independently manufacturing units, or more than one unit having common business ownership/management, only one unit should quote. Similar restrictions would apply to closely related sister companies. Bidders must proactively declare such sister/ common business/ management units in same/ similar line of business."

	Treatment of cases regarding conflict of interest: The bidder notes that a conflict of interest would said to have occurred in the tender process and execution of the resultant contract, in case of any of the following situations: i. If its personnel have a close personal, financial, or business relationship with any personnel of BHEL who are directly or indirectly related to the procurement or execution process of the contract, which can affect the decision of BHEL directly or indirectly; ii. The bidder (or his allied firm) provided services for the need assessment/ procurement planning of the Tender process in which it is participating; iii. Procurement of goods directly from the manufacturers/suppliers shall be preferred. However, if the OEM/ Principal insists on engaging the services of an agent, such agent shall not be allowed to represent more than one manufacturer/ supplier in the same tender. Moreover, either the agent could bid on behalf of the manufacturer/ supplier or the manufacturer/ supplier could bid directly but not both. In case bids are received from both the manufacturer/ supplier and the agent, bid received from the agent shall be ignored. However, this shall not debar more than one Authorised distributor (with/ or without the OEM) from quoting equipment manufactured by an Original Equipment Manufacturer (OEM) in procurements under a Proprietary Article Certificate. iv. A bidder participates in more than one bid in this tender process. Participation in any capacity by a Bidder (including the participation of a Bidder as a partner/ JV member or sub-contractor in another bid or vice-versa) in more than one bid shall result in the disqualification of all bids in which he is a party. However, this does not limit the participation of an entity as a sub-contractor in more than one bid if he is not bidding independently in his own name or as a member of a JV. The Bidder declares that they have read and understood the above aspects, and the bidder confirms that such conflict of interest does not exist and undertakes that they will not enter into any illegal or undisclosed agreement or understanding, whether formal or informal with other Bidder{s), in this regard. This applies in particular to prices, specifications, certifications, subsidiary contracts, submission or non-submission of bids or any other actions to restrict competitiveness or to introduce cartelization in the bidding process. In case, the Bidder is found having indulged in above activities, the same will be considered as a violation of the tender conditions, and suitab1e action shall be taken by BHEL as per extant policies/ guidelines.
33.	**For supply orders placed on Indian Suppliers:** Irrespective of the value of the invoice amount, the bidder / vendor should necessarily upload the despatch & invoice details on BHEL SUVIDHA portal at https://suvidha.bhel.in/suvidha/ , prior to despatch. All documents as per PO checklist, along with additional documents (if any), must be uploaded on the portal. It is mandatory that tax invoices with a net amount (including taxes) exceeding Rs five lakhs uploaded on the portal are digitally signed using a Class 3 Digital Signature Certificate (DSC) issued by a licensed Certifying Authority. Submission of invoice document in hard copy is allowed for invoices with a net amount (including taxes) equal to and upto Rs. five lakhs, in case they were not digitally signed and uploaded on the portal. The material will not be accepted inside BHEL in absence of the above. ”
34.	Enclosure:

	• Annexure-A: ITEM DETAILS / SCOPE OF SUPPLY • PQR • QUALITY &COMMERCIAL CHECKLIST • SPECIFICATIONS & DRAWINGS • No-Deviation Certificate Format • Make in India Certificate • QP FORMAT