Bharat Heavy Electricals Limited

Heavy Equipment Repair Plant

Tarna Shivpur Varanasi-221003
website: https://herp.bhel.com

Enquiry Number : **E-RC-304-25-0307-61-1** Date : **14/Jan/2026**

Enquiry For Material :-

Sl No	Material Description	Material Code	Quantity	Unit
1	JOURNAL OPENING FRAME LINER-14 (HY-1118.14) AS PER DRG 26130402274/00 WITH MATL AS PER SPECN. AA19741/03	BA9114135361	30.0	NOS
2	JOURNAL OPENING FRAME LINER-4 (HY-1118.04) AS PER DRG NO 26130402275/01 WITH MATL AS PER SPECN. AA19741/03	BA9114135370	30.0	NOS
3	JOURNAL OPENING FRAME LINER-3 (HY-1118.03) AS PER DRG NO. 26130402276/01 WITH MATL AS PER SPECN. AA19741/03	BA9114135388	60.0	NOS
4	JOURNAL OPENING FRMAE LINER-15 (HY-1118.15) AS PER DRG NO 26130402287/01 WITH MATL AS PER SPECN. AA19741/03	BA9114135434	30.0	NOS
5	DEFLECTOR BLADE (HY-46.A.01) - NIHARD CASTING AS PER DRG. 26136200715/01 (ITEM NO.2) WITH MATL. AS PER SPECN. AA19741/03	RV1920100091	375.0	NOS
6	OUTLET PLATE LINER (HY-153.02) - NIHARD CASTING AS PER DRG. 26147600118/04 WITH MATL AS PER SPECN. AA19741/03	RV1920100199	200.0	NOS
7	DEFLECTOR BLADE (HY-21.01) - NIHARD CASTING AS PER DRG. 26137600706/01 WITH MATL AS PER SPECN. AA19741/03	RV1920100350	1250.0	NOS
8	DEFLECTOR BLADE (HY-308.01) - NIHARD CASTING AS PER DRG. 26130000551/04 WITH MATL AS PER SEPCN. AA19741/03(BHEL HYD MATL. CODE BA9114103044)	RV1920100423	625.0	NOS
9	JR.HEAD LINER-I (HY-204.01) NIHARD CASTING AS PER DRG. 26108000420/03 WITH MATL AS PER SPECN. AA19741/03	RV1920100458	125.0	NOS.
10	JR.HEAD LINER-II (HY-204.02) NIHARD CASTING AS PER DRG. 36108000390/03 WITH MATL AS PER SPECN. AA19741/03	RV1920100466	13.0	NOS.
11	JR.HEAD LINER-III (HY-204.03) NIHARD CASTING AS PER DRG. 36108000391/03 WITH MATL AS PER SPECN. AA19741/03	RV1920100474	13.0	NOS.
12	JR.HEAD LINER-IV (HY-204.04) NIHARD CASTING AS PER DRG. 36108000392/04 WITH MATL AS PER SPECN. AA19741/03	RV1920100482	13.0	NOS
13	JR.HEAD LINER-V (HY-204.05) NIHARD CASTING AS PER DRG. 36108000393/04 WITH MATL AS PER SPECN. AA19741/03	RV1920100490	13.0	NOS.
14	OUTLET PLATE LINER (HY-318.02) - NIHARD CASTING AS PER DRG. 26140000555/01 WITH MATL AS PER SPECN. AA19741/03	RV1920100546	375.0	NOS.
15	JR.HEAD LINER-I (HY-220.2.1.2) - NIHARD CASTING AS PER DRG. 36106200579/03 WITH MATL AS PER SPECN. AA19741/03	RV1920100626	63.0	NOS
16	JR.HEAD LINER-II (HY-220.2.1.3) - NIHARD CASTING AS PER DRG. 36106200580/04 WITH MATL AS PER SPECN. AA19741/03	RV1920100634	25.0	NOS
17	JR.HEAD LINER-III (HY-220.2.1.4) - NIHARD CASTING AS PER DRG. 36106200581/04 WITH MATL AS PER SPECN. AA19741/03	RV1920100642	25.0	NOS
18	JR.HEAD LINER-IV (HY-220.2.1.5) - NIHARD CASTING AS PER DRG. 36106200582/05 WITH MATL AS PER SPECN. AA19741/03	RV1920100650	25.0	NOS
19	JR.HEAD LINER-V (HY-220.2.1.6) - NIHARD CASTING AS PER DRG.NO.36106200583/05 WITH MATL AS PER SPECN. AA19741/03	RV1920100669	32.0	NOS
20	SEPERATOR TOP LINER (HY-187.A.03) - NIHARD CASTING AS PER DRG. 36138000375/03 WITH MATL. AS PER SPECN. AA19741/03	RV1920100806	125.0	NOS.
21	INNER CONE SPOUT SEG. (HY-47.11) NIHARD CASTING TO DRG NO 26136200714/03.A VAR-02 WITH MATL. AS PER SPECN. AA19741/03	RV1920100989	19.0	NOS.
22	JR.HEAD LINER-III (HY-312.B.04) - NIHARD CASTING AS PER DRG. 26100000748/03 WITH MATL AS PER SPECN. AA19741/03	RV1920101551	1000.0	NOS.
23	OUTLET PLATE LINER (HY-962.02) - NIHARD CASTING AS PER DRG. 26148802055/01 WITH MATL AS PER SPECN. AA19741/03	RV1920101667	63.0	NOS

24	JR.HEAD LINER-I (HY-312.B.02) - NIHARD CASTING AS PER DRG. 26100000747/04 WITH MATL AS PER SPECN. AA19741/03	RV1920101837	565.0	NOS
25	JR.HEAD LINER-II (HY-312.B.03) - NIHARD CASTING AS PER DRG. 26100000749/04 WITH MATL AS PER SPECN. AA19741/03	RV1920101845	625.0	NOS
26	JR. HEAD LINER (HY-901.08.01) - NIHARD CASTING AS PER DRG. 26108802057/02 WITH MATL AS PER SPECN. AA19741/03	RV1920101853	25.0	NOS
27	JOURNAL HEAD LINER AS PER DRG. 26100402265/00 WITH MATL. AS PER SPECN. AA19741/03	RV1920102019	13.0	NOS
28	MPO LINER AS PER DRG. 26140002467/01 WITH MATL. AS PER SPECN. AA19741/03	RV1920102027	25.0	NOS
29	DEFLECTOR BLADE (HY-1119.05) - NIHARD CASTING AS PER DRG 36130402337/00 WITH MATL AS PER SEPCN. AA19741/03	RV1920102078	250.0	NOS
30	INNER CONE SPOUT SEGMENT AS PER DRG. 26130402281 REV-00 WITH MATL. AS PER SPECN. AA19741/03	RV1920102139	63.0	NOS
31	SET OF JOURNAL HEAD LINERS (ITEMS FROM 02 TO 06) AS PER DRG 1610401189/01 WITH MATL AS PER DRG.	RV1920102183	98.0	SET
32	INNER CONE SPOUT SEG.(HY-322.03) - NIHARD CASTING AS PER DRG. 26130001184/02 WITH MATL AS PER SPECN. AA19741/03	RV1920200304	63.0	NOS.
33	OUTLET PLATE LINER (HY-217.62.02) NIHARD CASTING AS PER DRG. 26146200593/02 WITH MATL AS PER SPECN. AA19741/03	RV1920200347	38.0	NOS.
34	JR. HEAD LINER (HY-311.B.01) - NIHARD CASTING AS PER DRG.26100000409/02 WITH MATL. AS PER SPECN. AA19741/03	RV1920200410	13.0	NOS.
35	JR.HEAD LINER SET (HY-204.00) - NIHARD CASTING AS PER DRG. HY-204.00 WITH MATL AS PER SPECN. AA19741/03	RV1920200461	25.0	SET
36	SET OF JOURNAL HEAD LINERS (3 TYPES) - (04 NOS/SET) NIHARD CASTING AS PER DRG. HY-901.09.01.A WITH MATL AS PER SPECN. AA19741/03	RV1920200673	32.0	SET
37	J.O.F. LINER-I (HY-969.01) AS PER DRG. 26138802031/01 WITH MATL AS PER SPECN. AA19741/03	RV1920200827	25.0	NOS
38	J.O.F. LINER-III (HY-969.03) AS PER DRG. 36138802019/01 WITH MATL AS PER SPECN. AA19741/03	RV1920200843	32.0	NOS
39	J.O.F. LINER-IV (HY-969.04) AS PER DRG. 26138802033/01 WITH MATL AS PER SPECN. AA19741/03	RV1920200851	25.0	NOS
40	J.O.F. LINER-IX (HY-969.09) AS PER DRG. 36138802015/01 WITH MATL AS PER SPECN. AA19741/03	RV1920200908	13.0	NOS
41	DEFLECTOR BLADE (HY-707.08.33) - NIHARD CASTING AS PER DRG. 26137000880/03 WITH MATL AS PER SPECN. AA19741/03	RV1920200983	25.0	NOS
42	J.O.F LINER-V (HY-1118.05) AS PER DRG NO 26130402272 AND SPEC AA19741/03	RV1920201017	25.0	NOS
43	J.O.F LINER-VI (HY-1118.06) AS PER DRG NO 16130401176 AND SPEC AA19741/03	RV1920201025	25.0	NOS
44	J.O.F LINER-VII (HY-1118.07) AS PER DRG NO 16130401175 AND SPEC AA19741/03	RV1920201033	25.0	NOS
45	J.O.F LINER-VIII (HY-1118.08) AS PER DRG NO 26130402279 Rev. 01 AND SPEC AA19741/03	RV1920201041	25.0	NOS
46	J.O.F LINER-X (HY-1118.10) AS PER DRG NO 26130402344 AND SPEC AA19741/03	RV1920201059	25.0	NOS
47	J.O.F LINER-XI (HY-1118.11) AS PER DRG NO 16130401182 AND SPEC AA19741/03	RV1920201067	25.0	NOS
48	J.O.F LINER-XII (HY-1118.12) AS PER DRG NO 16130401178 AND SPEC AA19741/03	RV1920201075	25.0	NOS
49	J.O.F LINER-XIII (HY-1118.13) AS PER DRG NO 16130401177 AND SPEC AA19741/03	RV1920201083	25.0	NOS
50	J.O.F. LINER-V (HY-969.05) AS PER DRG. 26138802034/01 WITH MATL AS PER SPECN. AA19741/03	RV9114134616	25.0	NOS

Remarks

(A) SCOPE OF SUPPLY:-

1. THIS ENQUIRY HAS BEEN RAISED FOR ENTERING INTO FRAMEWORK AGREEMENT (VALUE WISE) WITH VENDORS FOR NiHARD CASTINGS. SEPARATE PO WILL BE GIVEN TIME TO TIME AS PER REQUIREMENT UNDER THIS RC. ITEMS QUANTITY MENTIONED IN THE ENQUIRY IS TENTATIVE & IT MAY INCREASE OR DECREASE AS PER OUR FINAL REQUIREMENT.

2.THE % WEIGHTAGE FOR CALCULATING TOTAL COST OF INDIVIDUAL ITEM HAS BEEN ARRIVED CONSIDERING INDIVIDUAL ITEM'S CONTENT IN TOTAL ESTIMATED COST OF ALL THE ENQUIRY ITEMS. THE % WEIGHTAGE WILL BE AS PER ANNEXURE-IV.

3. VALUE WISE MEANS FA WILL DONE ON SINGLE SET BASIS FOR ALL THE 50 ITEMS WITH THEIR FULL QUANTITY AND NOT QUANTITY OF INDIVIDUAL ITEM.

4. RATE FOR INDIVIDUAL ITEM WILL BE ARRIVED AS PER PERCENTAGE WEIGHTAGE MENTIONED IN ANNEXURE-ATTACHED.

5. RATES OF ITEMS AGAINST FA WILL BE FIRM & VALID FOR ORDERING FOR A PERIOD OF ONE YEAR FROM THE DATE OF AGREEMENT. PRICE VARIATION CLAUSE (PVC) IS NOT ACCEPTABLE.

6. VENDOR HAS TO QUOTE FOR ALL THE 50 ITEMS OF TENDER ENQUIRY COMPULSORILY. IN CASE, ANY VENDOR QUOTES FOR PART ITEM, THEIR OFFER WILL NOT BE CONSIDERED FOR FURTHER EVALUATION.

7. L-1 VENDOR WILL BE DECIDED ON TOTAL COST ON SET BASIS.

8. RC QTY AGAINST EACH ITEM IS INDICATIVE ONLY. PO WILL BE PLACED BASED ON ACTUAL REQUIREMENT IRRESPECTIVE OF RC QUANTITY NOT EXCEEDING THE TOTAL RATE CONTRACT VALUE.

AFTER FINALIIZATION OF RATE CONTRACT, PO QUANTITY WILL BE PLACED AS PER REQUIREMENT.

(B) SUPPLY CONDITION :
1. ITEM TO BE SUPPLIED AT BHEL HERP STORES.
2. PRE-DESPATCH INSPECTION WILL BE CARRIED OUT AS PER QUALITY PLAN RV/C&F/03 REV-02 AT PARTY'S WORKS BY BHEL REPRESENTATIVE.

(C) TECHNICAL DELIVERY CONDITION:
1. MATERIAL IS TO BE SUPPLIED AS PER SPECFICATION AA19741/03.
2. DIMENSIONS AND TOLERANCES TO BE MAINTAINED AS PER DRG.
3. CASTING SHOULD BE FREE FROM ALL DEFECTS.
4. CASTING SHOULD BE PROPERLY FETTLED TO PRODUCE EVEN SURFACE.
5. HEAT TREATMENT CHART IS REQUIRED.
6. ALL TECHNICAL REQUIREMENTS OF THE DRAWING MUST BE FULLFILLED.
7. DIMENSION REPORT IS REQUIRED.

(D) TEST CERTIFICATE: REQUIRED FOR CHEMICAL & MECHANICAL PROPERTIES AND HARDNESS OF RAW MATL.

(E) GUARANTEE CERTIFICATE: REQUIRED FOR 24 MONTHS AGAINST ANY MANUFACTURING DEFECTS FROM THE DATE OF RECIPT AT BHEL HERP.

(F) PACKING INSTRUCTIONS : ITEM TO BE SUPPLIED IN PROPERLY PACKED CONDITIONS WOODEN BOX OF 1" THICK PLANK WITH 1.5"X4" BKTS. ONE LINER SHOULD BE PLACED OVER ANOTHER BY PLACING PAPER CUTOUT /HARD PAPER BOARD/STRAW APPROX. 10 MM THICK IN BETWEEN THEM DURING PACKING IN THE WOODEN BOX. ALL THE GAPS AT EVERY NOOKS OF THE WOODEN BOX MUST BE TIGHTLY PACKED BY USING THE AFORESAID MATERIALS IN SUCH A WAY THAT THERE SHALL NOT BE ANY PROBABILITY OF RELATIVE MOTION BETWEEN THE PACKED LINERS DURING TRANSIT.

(G) RATE CONTRACT VALIDITY: FOR 1 (ONE) YEAR FROM THE RC-PO DATE.

(H) SPECIAL REMARKS:

1. ITEM WISE MAXIMUM QTY IN EACH LOT (WHICH MAY BE REQUIRED IN A PARTICULAR ORDER) WILL BE AS MENTIONED IN ANNEXURE--RC-LOT-BA19/01. THERE WILL BE A GAP OF 01 MONTH BETWEEN TWO CONSECUTIVE LOTS.
2. DELIVERY IS WITHIN 120 DAYS FROM DATE OF PO FOR FIRST LOT.

(I) SPLITTING CONDITION:

1. THERE WILL BE SPLITTING BETWEEN TWO VENDORS IN THE RATIO OF L1:L2::60:40.

2. THE EQUATED L1 RATES OF ITEMS WOULD BE COUNTER OFFERED TO THE NEXT HIGHER BIDDER IN ORDER OF THEIR RANKING AND THE QUANTITY WOULD BE GIVEN TO THE BIDDER WHO ACCEPT THE EQUATED L1 PRICE ON THE BASIS OF THEIR RANKING IN THE PRICE BID.

3. IF NONE OF THE OTHER BIDDERS ACCEPT THE L1 PRICE, THEN THE ENTIRE QUANTITY OF THE TENDER WOULD BE ORDERED TO THE ORIGINAL L1 PARTY ONLY.

4. AT ANY POINT OF TIME OR IF THE PERFORMANCE OF ANY VENDOR IS FOUND UNSATISFACTORY, THE ABOVE DISTRIBUTION RATIO MAY BE CANCELLED OR CHANGED BY BHEL AND ITEMS MAY BE PROCURED FROM PERFORMING VENDORS.

(J) REVERSE AUCTION (RA) WILL NOT BE CONDUCTED.

(K) CLAUSE FOR INTEGRITY PACT (IP) SHALL BE AS PER ANNEXURE-1 & 2 ATTACHED. BIDDER SHALL SUBMIT THE ATTACHED

ANNEXURE-1 FILLED, SIGNED AND STAMPED.

(L) AN EMD AMOUNT OF RS. 6,00,000 (SIX LAKHS) IS APPLICABLE FOR THIS ENQUIRY EXCEPT FOR THE BIDDERS WHICH ARE:
(1) MICRO AND SMALL ENTERPRISES (MSES) OR STARTUPS AS RECOGNIZED BY DEPARTMENT FOR PROMOTION OF INDUSTRY
AND INTERNAL TRADE (DPIIT).
(2) CENTRAL/STATE PSE
(3) MANUFACTURERS

(M) PERFORMANCE SECURITY: IF ANY INDIVIDUAL SUPPLY PO RELAESED AGAINST THIS FA TO A SINGLE VENDOR WHOSE PO
VALUE IS MORE THAN 02 CRORES THEN PERFORMANCE SECURITY 05% OF CONTRACT VALUE IS TO BE SUBMITTED BY SUPPLIER
TO WHOM FA IS AWARDED.

VALIDITY OF PERFORMANCE SECURITY WILL BE 30 MONTHS FROM THE MONTH OF DTAE OF PO.

PERFORMANCE SECURITY MAY BE FURNISHED IN THE FOLLOWING FORMS:
(I) LOCAL CHEQUES OF SCHEDULED BANKS (SUBJECT TO REALIZATION)/ PAY ORDER/ DEMAND DRAFT/ ELECTRONIC FUND TRANSFER IN FAVOUR OF BHEL.
(II)BANK GUARANTEE FROM SCHEDULED BANKS / PUBLIC FINANCIAL INSTITUTIONS AS DEFINED IN THE COMPANIES ACT. THE
BANK GUARANTEE FORMAT SHOULD HAVE THE APPROVAL OF BHEL.
(III)SECURITIES AVAILABLE FROM INDIAN POST OFFICES SUCH AS NATIONAL SAVINGS CERTIFICATES, KISAN VIKAS PATRAS ETC.
(HELD IN THE NAME OF CONTRACTOR FURNISHING THE SECURITY AND DULY ENDORSED/ HYPOTHECATED/ PLEDGED, AS APPLICABLE, IN FAVOUR OF BHEL).
(IV) INSURANCE SURETY BOND.
(NOTE: BHEL WILL NOT BE LIABLE OR RESPONSIBLE IN ANY MANNER FOR THE COLLECTION OF INTEREST OR RENEWAL OF THE
DOCUMENTS OR IN ANY OTHER MATTER CONNECTED THEREWITH).

(N)FORFEITURE OF PERFORMANCE SECURITY: THE PERFORMANCE SECURITY WILL BE FORFEITED AND CREDITED TO BHEL'S
ACCOUNT IN THE EVENT OF A BREACH OF CONTRACT BY THE SUPPLIER.

(O) IN ORDER TO AVAIL BENEFITS OF MSE UNDER VARIOUS CATEGORIES, ALL BIDDERS FALLING UNDER MSE CATEGORY SHALL FURNISH THE FOLLOWING DETAILS & SUBMIT DOCUMENTARY EVIDENCE/ GOVT. CERTIFICATE ETC. IN SUPPORT OF THE SAME ALONG WITH THEIR TECHNO-COMMERCIAL OFFER AS PER ANNEXURE - MSES 2012 REV 01 ATTACHED.

SPECIAL TERMS AND CONDITIONS:

1. ALL OTHER TERMS AND CONDITIONS SHALL BE AS PER THE GTC ATTACHED WITH ENQUIRY (PARTY HAVE TO STRICTLY ADHERE THESE TERMS & CONDITIONS).

List of required Quality Documents along with supply:-

S.No	Material Code	Material Description	Documents Description
Note : Any other document mentioned in QP/Drg/Spec will also be applicable			

ESTIMATION SHEET SUMMARY

ANNEXURE-IV

S.NO	MAT.CODE	ITEM DESCRIPTION	QTY(NOS)	% WEIGHTAGE
1	BA9114135361	JOURNAL OPENING FRAME LINER-14 (HY-1118.14) AS PER DRG 26130402274/00 WITH MATL AS PER SPECN. AA19741/03	30	2.80%
2	BA9114135370	JOURNAL OPENING FRAME LINER-4 (HY-1118.04) AS PER DRG NO 26130402275/01 WITH MATL AS PER SPECN. AA19741/03	30	6.67%
3	BA9114135388	JOURNAL OPENING FRAME LINER-3 (HY-1118.03) AS PER DRG NO. 26130402276/01 WITH MATL AS PER SPECN. AA19741/03	60	5.38%
4	BA9114135434	JOURNAL OPENING FRMAE LINER-15 (HY-1118.15) AS PER DRG NO 26130402287/01 WITH MATL AS PER SPECN. AA19741/03	30	1.23%
5	RV1920100091	DEFLECTOR BLADE (HY-46.A.01) - NIHARD CASTING AS PER DRG. 26136200715/01 (ITEM NO.2) WITH MATL. AS PER SPECN. AA19741/03	375	0.11%
6	RV1920100199	OUTLET PLATE LINER (HY-153.02) - NIHARD CASTING AS PER DRG. 26147600118/04 WITH MATL AS PER SPECN. AA19741/03	200	0.35%
7	RV1920100350	DEFLECTOR BLADE (HY-21.01) - NIHARD CASTING AS PER DRG. 26137600706/01 WITH MATL AS PER SPECN. AA19741/03	1250	1.72%
8	RV1920100423	DEFLECTOR BLADE (HY-308.01) - NIHARD CASTING AS PER DRG. 26130000551/04 WITH MATL AS PER SEPCN. AA19741/03	625	2.32%
9	RV1920100458	JR.HEAD LINER-I (HY-204.01) NIHARD CASTING AS PER DRG. 26108000420/03 WITH MATL AS PER SPECN. AA19741/03	125	0.59%
10	RV1920100466	JR.HEAD LINER-II (HY-204.02) NIHARD CASTING AS PER DRG. 36108000390/03 WITH MATL AS PER SPECN. AA19741/03	13	0.14%
11	RV1920100474	JR.HEAD LINER-III (HY-204.03) NIHARD CASTING AS PER DRG. 36108000391/03 WITH MATL AS PER SPECN. AA19741/03	13	0.53%
12	RV1920100482	JR.HEAD LINER-IV (HY-204.04) NIHARD CASTING AS PER DRG. 36108000392/04 WITH MATL AS PER SPECN. AA19741/03	13	0.37%
13	RV1920100490	JR.HEAD LINER-V (HY-204.05) NIHARD CASTING AS PER DRG. 36108000393/04 WITH MATL AS PER SPECN. AA19741/03	13	0.47%
14	RV1920100546	OUTLET PLATE LINER (HY-318.02) - NIHARD CASTING AS PER DRG. 26140000555/01 WITH MATL AS PER SPECN. AA19741/03	375	1.00%
15	RV1920100626	JR.HEAD LINER-I (HY-220.2.1.2) - NIHARD CASTING AS PER DRG. 36106200579/03 WITH MATL AS PER SPECN. AA19741/03	63	0.56%
16	RV1920100634	JR.HEAD LINER-II (HY-220.2.1.3) - NIHARD CASTING AS PER DRG. 36106200580/04 WITH MATL AS PER SPECN. AA19741/03	25	9.68%

17	RV1920100642	JR.HEAD LINER-III (HY-220.2.1.4) - NIHARD CASTING AS PER DRG. 36106200581/04 WITH MATL AS PER SPECN. AA19741/03	25	0.06%
18	RV1920100650	JR.HEAD LINER-IV (HY-220.2.1.5) - NIHARD CASTING AS PER DRG. 36106200582/05 WITH MATL AS PER SPECN. AA19741/03	25	10.76%
19	RV1920100669	JR.HEAD LINER-V (HY-220.2.1.6) - NIHARD CASTING AS PER DRG.NO.36106200583/05 WITH MATL AS PER SPECN. AA19741/03	32	0.06%
20	RV1920100806	SEPERATOR TOP LINER (HY-187.A.03) - NIHARD CASTING AS PER DRG. 36138000375/03 WITH MATL. AS PER SPECN. AA19741/03	125	16.02%
21	RV1920100989	INNER CONE SPOUT SEG. (HY-47.11) NIHARD CASTING TO DRG NO 26136200714/03.A VAR-02 WITH MATL. AS PER SPECN. AA19741/03	19	0.08%
22	RV1920101551	JR.HEAD LINER-III (HY-312.B.04) - NIHARD CASTING AS PER DRG. 26100000748/03 WITH MATL AS PER SPECN. AA19741/03	1000	0.08%
23	RV1920101667	OUTLET PLATE LINER (HY-962.02) - NIHARD CASTING AS PER DRG. 26148802055/01 WITH MATL AS PER SPECN. AA19741/03	63	0.30%
24	RV1920101837	JR.HEAD LINER-I (HY-312.B.02) - NIHARD CASTING AS PER DRG. 26100000747/04 WITH MATL AS PER SPECN. AA19741/03	565	2.58%
25	RV1920101845	JR.HEAD LINER-II (HY-312.B.03) - NIHARD CASTING AS PER DRG. 26100000749/04 WITH MATL AS PER SPECN. AA19741/03	625	9.92%
26	RV1920101853	JR. HEAD LINER (HY-901.08.01) - NIHARD CASTING AS PER DRG. 26108802057/02 WITH MATL AS PER SPECN. AA19741/03	25	1.34%
27	RV1920102019	J.O.F. LINER-IX (HY-969.09) AS PER DRG. 36138802015/01 WITH MATL AS PER SPECN. AA19741/03	13	2.70%
28	RV1920102027	MPO LINER AS PER DRG. 26140002467/01 WITH MATL. AS PER SPECN. AA19741/03	25	1.40%
29	RV1920102078	DEFLECTOR BLADE (HY-1119.05) - NIHARD CASTING AS PER DRG 36130402337/00 WITH MATL AS PER SEPCN. AA19741/03	250	11.87%
30	RV1920102139	INNER CONE SPOUT SEGMENT AS PER DRG. 26130402281 REV-00 WITH MATL. AS PER SPECN. AA19741/03	63	0.53%
31	RV1920102183	SET OF JOURNAL HEAD LINERS (ITEMS FROM 02 TO 06) AS PER DRG 1610401189/01 WITH MATL AS PER DRG.	98	0.53%
32	RV1920200304	INNER CONE SPOUT SEG.(HY-322.03) - NIHARD CASTING AS PER DRG. 26130001184/02 WITH MATL AS PER SPECN. AA19741/03	63	1.08%
33	RV1920200347	OUTLET PLATE LINER (HY-217.62.02) NIHARD CASTING AS PER DRG. 26146200593/02 WITH MATL AS PER SPECN. AA19741/03	38	0.54%
34	RV1920200410	JR. HEAD LINER (HY-311.B.01) - NIHARD CASTING AS PER DRG.26100000409/02 WITH MATL. AS PER SPECN. AA19741/03	13	0.27%
35	RV1920200461	JR.HEAD LINER SET (HY-204.00) - NIHARD CASTING AS PER DRG. HY-204.00 WITH MATL AS PER SPECN. AA19741/03	25	0.13%

36	RV1920200673	SET OF JOURNAL HEAD LINERS (3 TYPES) - (04 NOS/SET) NIHARD CASTING AS PER DRG. HY-901.09.01.A WITH MATL AS PER SPECN. AA19741/03	32	0.11%
37	RV1920200827	J.O.F. LINER-I (HY-969.01) AS PER DRG. 26138802031/01 WITH MATL AS PER SPECN. AA19741/03	25	0.11%
38	RV1920200843	J.O.F. LINER-III (HY-969.03) AS PER DRG. 36138802019/01 WITH MATL AS PER SPECN. AA19741/03	32	0.11%
39	RV1920200851	J.O.F. LINER-IV (HY-969.04) AS PER DRG. 26138802033/01 WITH MATL AS PER SPECN. AA19741/03	25	0.22%
40	RV9114134616	J.O.F. LINER-V (HY-969.05) AS PER DRG. 26138802034/01 WITH MATL AS PER SPECN. AA19741/03	25	0.24%
41	RV1920200908	J.O.F. LINER-IX (HY-969.09) AS PER DRG. 36138802015/01 WITH MATL AS PER SPECN. AA19741/03	13	0.39%
42	RV1920200983	DEFLECTOR BLADE (HY-707.08.33) - NIHARD CASTING AS PER DRG. 26137000880/03 WITH MATL AS PER SPECN. AA19741/03	25	0.75%
43	RV1920201017	J.O.F LINER-V (HY-1118.05) AS PER DRG NO 26130402272 AND SPEC AA19741/03	25	0.47%
44	RV1920201025	J.O.F LINER-VI (HY-1118.06) AS PER DRG NO 16130401176 AND SPEC AA19741/03	25	0.47%
45	RV1920201033	J.O.F LINER-VII (HY-1118.07) AS PER DRG NO 16130401175 AND SPEC AA19741/03	25	0.34%
46	RV1920201041	J.O.F LINER-VIII (HY-1118.08) AS PER DRG NO 26130402279 Rev. 01 AND SPEC AA19741/03	25	0.49%
47	RV1920201059	J.O.F LINER-X (HY-1118.10) AS PER DRG NO 26130402344 AND SPEC AA19741/03	25	0.49%
48	RV1920201067	J.O.F LINER-XI (HY-1118.11) AS PER DRG NO 16130401182 AND SPEC AA19741/03	25	0.43%
49	RV1920201075	J.O.F LINER-XII (HY-1118.12) AS PER DRG NO 16130401178 AND SPEC AA19741/03	25	0.60%
50	RV1920201083	J.O.F LINER-XIII (HY-1118.13) AS PER DRG NO 16130401177 AND SPEC AA19741/03	25	0.60%
		TOTAL	**6709**	

ANNEXURE--RC-LOT-BA19/01

S.NO	MAT.CODE	ITEM DESCRIPTION	RC QTY	MAX LOT
1	BA9114135361	JOURNAL OPENING FRAME LINER-14 (HY-1118.14) AS PER DRG 26130402274/00 WITH MATL AS PER SPECN. AA19741/03	30	15
2	BA9114135370	JOURNAL OPENING FRAME LINER-4 (HY-1118.04) AS PER DRG NO 26130402275/01 WITH MATL AS PER SPECN. AA19741/03	30	15
3	BA9114135388	JOURNAL OPENING FRAME LINER-3 (HY-1118.03) AS PER DRG NO. 26130402276/01 WITH MATL AS PER SPECN. AA19741/03	60	30
4	BA9114135434	JOURNAL OPENING FRMAE LINER-15 (HY-1118.15) AS PER DRG NO 26130402287/01 WITH MATL AS PER SPECN. AA19741/03	30	15
5	RV1920100091	DEFLECTOR BLADE (HY-46.A.01) - NIHARD CASTING AS PER DRG. 26136200715/01 (ITEM NO.2) WITH MATL. AS PER SPECN. AA19741/03	375	100
6	RV1920100199	OUTLET PLATE LINER (HY-153.02) - NIHARD CASTING AS PER DRG. 26147600118/04 WITH MATL AS PER SPECN. AA19741/03	200	50
7	RV1920100350	DEFLECTOR BLADE (HY-21.01) - NIHARD CASTING AS PER DRG. 26137600706/01 WITH MATL AS PER SPECN. AA19741/03	1250	250
8	RV1920100423	DEFLECTOR BLADE (HY-308.01) - NIHARD CASTING AS PER DRG. 26130000551/04 WITH MATL AS PER SEPCN. AA19741/03	625	200
9	RV1920100458	JR.HEAD LINER-I (HY-204.01) NIHARD CASTING AS PER DRG. 26108000420/03 WITH MATL AS PER SPECN. AA19741/03	125	50
10	RV1920100466	JR.HEAD LINER-II (HY-204.02) NIHARD CASTING AS PER DRG. 36108000390/03 WITH MATL AS PER SPECN. AA19741/03	13	10
11	RV1920100474	JR.HEAD LINER-III (HY-204.03) NIHARD CASTING AS PER DRG. 36108000391/03 WITH MATL AS PER SPECN. AA19741/03	13	10
12	RV1920100482	JR.HEAD LINER-IV (HY-204.04) NIHARD CASTING AS PER DRG. 36108000392/04 WITH MATL AS PER SPECN. AA19741/03	13	10
13	RV1920100490	JR.HEAD LINER-V (HY-204.05) NIHARD CASTING AS PER DRG. 36108000393/04 WITH MATL AS PER SPECN. AA19741/03	13	10
14	RV1920100546	OUTLET PLATE LINER (HY-318.02) - NIHARD CASTING AS PER DRG. 26140000555/01 WITH MATL AS PER SPECN. AA19741/03	375	50
15	RV1920100626	JR.HEAD LINER-I (HY-220.2.1.2) - NIHARD CASTING AS PER DRG. 36106200579/03 WITH MATL AS PER SPECN. AA19741/03	63	25
16	RV1920100634	JR.HEAD LINER-II (HY-220.2.1.3) - NIHARD CASTING AS PER DRG. 36106200580/04 WITH MATL AS PER SPECN. AA19741/03	25	10
17	RV1920100642	JR.HEAD LINER-III (HY-220.2.1.4) - NIHARD CASTING AS PER DRG. 36106200581/04 WITH MATL AS PER SPECN. AA19741/03	25	10

18	RV1920100650	JR.HEAD LINER-IV (HY-220.2.1.5) - NIHARD CASTING AS PER DRG. 36106200582/05 WITH MATL AS PER SPECN. AA19741/03	25	10
19	RV1920100669	JR.HEAD LINER-V (HY-220.2.1.6) - NIHARD CASTING AS PER DRG.NO.36106200583/05 WITH MATL AS PER SPECN. AA19741/03	32	15
20	RV1920100806	SEPERATOR TOP LINER (HY-187.A.03) - NIHARD CASTING AS PER DRG. 36138000375/03 WITH MATL. AS PER SPECN. AA19741/03	125	50
21	RV1920100989	INNER CONE SPOUT SEG. (HY-47.11) NIHARD CASTING TO DRG NO 26136200714/03.A VAR-02 WITH MATL. AS PER SPECN. AA19741/03	19	10
22	RV1920101551	JR.HEAD LINER-III (HY-312.B.04) - NIHARD CASTING AS PER DRG. 26100000748/03 WITH MATL AS PER SPECN. AA19741/03	1000	250
23	RV1920101667	OUTLET PLATE LINER (HY-962.02) - NIHARD CASTING AS PER DRG. 26148802055/01 WITH MATL AS PER SPECN. AA19741/03	63	30
24	RV1920101837	JR.HEAD LINER-I (HY-312.B.02) - NIHARD CASTING AS PER DRG. 26100000747/04 WITH MATL AS PER SPECN. AA19741/03	565	100
25	RV1920101845	JR.HEAD LINER-II (HY-312.B.03) - NIHARD CASTING AS PER DRG. 26100000749/04 WITH MATL AS PER SPECN. AA19741/03	625	100
26	RV1920101853	JR. HEAD LINER (HY-901.08.01) - NIHARD CASTING AS PER DRG. 26108802057/02 WITH MATL AS PER SPECN. AA19741/03	25	15
27	RV1920102019	J.O.F. LINER-IX (HY-969.09) AS PER DRG. 36138802015/01 WITH MATL AS PER SPECN. AA19741/03	13	10
28	RV1920102027	MPO LINER AS PER DRG. 26140002467/01 WITH MATL. AS PER SPECN. AA19741/03	25	10
29	RV1920102078	DEFLECTOR BLADE (HY-1119.05) - NIHARD CASTING AS PER DRG 36130402337/00 WITH MATL AS PER SEPCN. AA19741/03	250	50
30	RV1920102139	INNER CONE SPOUT SEGMENT AS PER DRG. 26130402281 REV-00 WITH MATL. AS PER SPECN. AA19741/03	63	20
31	RV1920102183	SET OF JOURNAL HEAD LINERS (ITEMS FROM 02 TO 06) AS PER DRG 1610401189/01 WITH MATL AS PER DRG.	98	25
32	RV1920200304	INNER CONE SPOUT SEG.(HY-322.03) - NIHARD CASTING AS PER DRG. 26130001184/02 WITH MATL AS PER SPECN. AA19741/03	63	25
33	RV1920200347	OUTLET PLATE LINER (HY-217.62.02) NIHARD CASTING AS PER DRG. 26146200593/02 WITH MATL AS PER SPECN. AA19741/03	38	15
34	RV1920200410	JR. HEAD LINER (HY-311.B.01) - NIHARD CASTING AS PER DRG.26100000409/02 WITH MATL. AS PER SPECN. AA19741/03	13	10
35	RV1920200461	JR.HEAD LINER SET (HY-204.00) - NIHARD CASTING AS PER DRG. HY-204.00 WITH MATL AS PER SPECN. AA19741/03	25	10
36	RV1920200673	SET OF JOURNAL HEAD LINERS (3 TYPES) - (04 NOS/SET) NIHARD CASTING AS PER DRG. HY-901.09.01.A WITH MATL AS PER SPECN. AA19741/03	32	15

37	RV1920200827	J.O.F. LINER-I (HY-969.01) AS PER DRG. 26138802031/01 WITH MATL AS PER SPECN. AA19741/03	25	15
38	RV1920200843	J.O.F. LINER-III (HY-969.03) AS PER DRG. 36138802019/01 WITH MATL AS PER SPECN. AA19741/03	32	15
39	RV1920200851	J.O.F. LINER-IV (HY-969.04) AS PER DRG. 26138802033/01 WITH MATL AS PER SPECN. AA19741/03	25	10
40	RV9114134616	J.O.F. LINER-V (HY-969.05) AS PER DRG. 26138802034/01 WITH MATL AS PER SPECN. AA19741/03	25	10
41	RV1920200908	J.O.F. LINER-IX (HY-969.09) AS PER DRG. 36138802015/01 WITH MATL AS PER SPECN. AA19741/03	13	10
42	RV1920200983	DEFLECTOR BLADE (HY-707.08.33) - NIHARD CASTING AS PER DRG. 26137000880/03 WITH MATL AS PER SPECN. AA19741/03	25	10
43	RV1920201017	J.O.F LINER-V (HY-1118.05) AS PER DRG NO 26130402272 AND SPEC AA19741/03	25	10
44	RV1920201025	J.O.F LINER-VI (HY-1118.06) AS PER DRG NO 16130401176 AND SPEC AA19741/03	25	10
45	RV1920201033	J.O.F LINER-VII (HY-1118.07) AS PER DRG NO 16130401175 AND SPEC AA19741/03	25	10
46	RV1920201041	J.O.F LINER-VIII (HY-1118.08) AS PER DRG NO 26130402279 Rev. 01 AND SPEC AA19741/03	25	10
47	RV1920201059	J.O.F LINER-X (HY-1118.10) AS PER DRG NO 26130402344 AND SPEC AA19741/03	25	10
48	RV1920201067	J.O.F LINER-XI (HY-1118.11) AS PER DRG NO 16130401182 AND SPEC AA19741/03	25	10
49	RV1920201075	J.O.F LINER-XII (HY-1118.12) AS PER DRG NO 16130401178 AND SPEC AA19741/03	25	10
50	RV1920201083	J.O.F LINER-XIII (HY-1118.13) AS PER DRG NO 16130401177 AND SPEC AA19741/03	25	10
		Total	**6709**	

PQR for Un-Machined /Rough Machined Casting Mill items

PQR Ref No: PQR/24-25/ Un-Machined /Rough Machined Castings	**Date: 23.08.2024**
Rev No: 03	**Review Date: 06.09.2025**
PQR Revision Date: 06.09.2025	

Sl. No.	BHEL Terms	Supplier's ComplianceYES/NO
1	**Offers are accepted from:**	
1.a	Only Manufacturer's Offers shall be considered for the Tender Enquiry.	
2	**Supplier shall give list of In-House Facilities:**	
2.a	Vendor shall have in-House necessary Manufacturing facilities required for manufacturing and supply of item/s as per drawing/specification. This being primarily a casting requirement, Vendor must have all in-house required castings facilities and fulfil all requirement of our QAP. Vendor may outsource the Fully/rough machining activites of the job.	
2.b	BHEL reserves right to visit the Works of the Manufacturer for Physical verification of the Manufacturing facilities (as declared by them) and assessment of their Quality systems during Technical Evaluation of the Offers.	
2.c	Bidders shall submit duly filled, signed & stamp copy of detailed Manufacturing process Plan along with the Technical Offer.	
3	**Experience:**	
3.a	Bidders shall submit the necessary documents proving their Experience in Supplying same or similar items to any Power Plant Equipment Manufacturer (Original Equipment Manufacturer)/ Defence Equipment Manufacturer (Original Equipment Manufacturer) (Govt or PSU)/AeroSpace Equipment Manufacturer (Original Equipment Manufacturer) (Govt or PSU)/Indian Railway during last Five (05) years from the date of Enquiry. Documentary evidances to be submitted in the form of Executed Purchase Order copies along with Material Acceptance Report and drawings/specifications of the supplied item/items. No relaxation in experience shall be given to MSEs & Notified start-ups.	
3.b	BHEL reserves right to verify the details from the Bidder's customers based on Documents submitted as a part of past experience. BHEL may ask for other relevant documents in line with above to review the capacity and capability of vendor with respect to enquired items.	
4	**Financial Capability:**	
4.a	**Turn Over:-** Turn over of Non-MSE vendors should be 100% of tender value. Relaxation for MSE vendors/ Notified Start-Ups on turn over will be as per MSME guidelines. Latest UDYAM Certificate required for MSE status.	
4.b	Applicable only for Non-MSE vendors: Audited balance Sheet and Profit and Loss account Statement of last three consecutive year (with UDIN) required along with part-1 bid. Or A CA Certified Consolidated summary (with UDIN) for last 3 consecutive years having annual turn over and Profit and Loss to be enclosed along with Part-1 bid . For Vendors having Turn over less than 1 crore in any of the financial year, CA certified Financial Turn over and Profit Loss (with UDIN) may be accepted for that year only.	

Note-1: Non Submission of the above requested documents/non compliance to the above points is liable for rejection of the Offers without any further Notice/Intimation to the Bidder and no correspondance will be entertained at later stage.

Note-2: "Similar items" means items having same or similar Constructional feature, manufacturing process, similar nature of use, etc.

FIRST ANGLE PROJECTION (ALL DIMENSIONS ARE IN mm) C.C.S.

DRG. NO. 1-61-004-01187

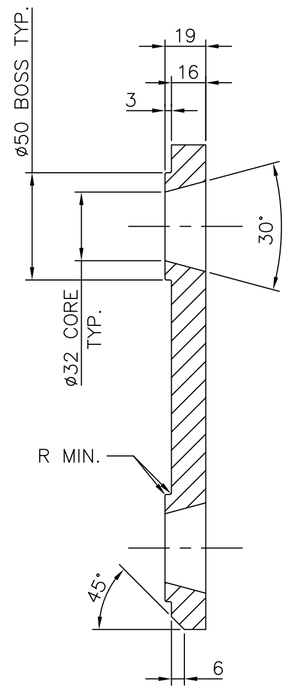

SECTION A-A

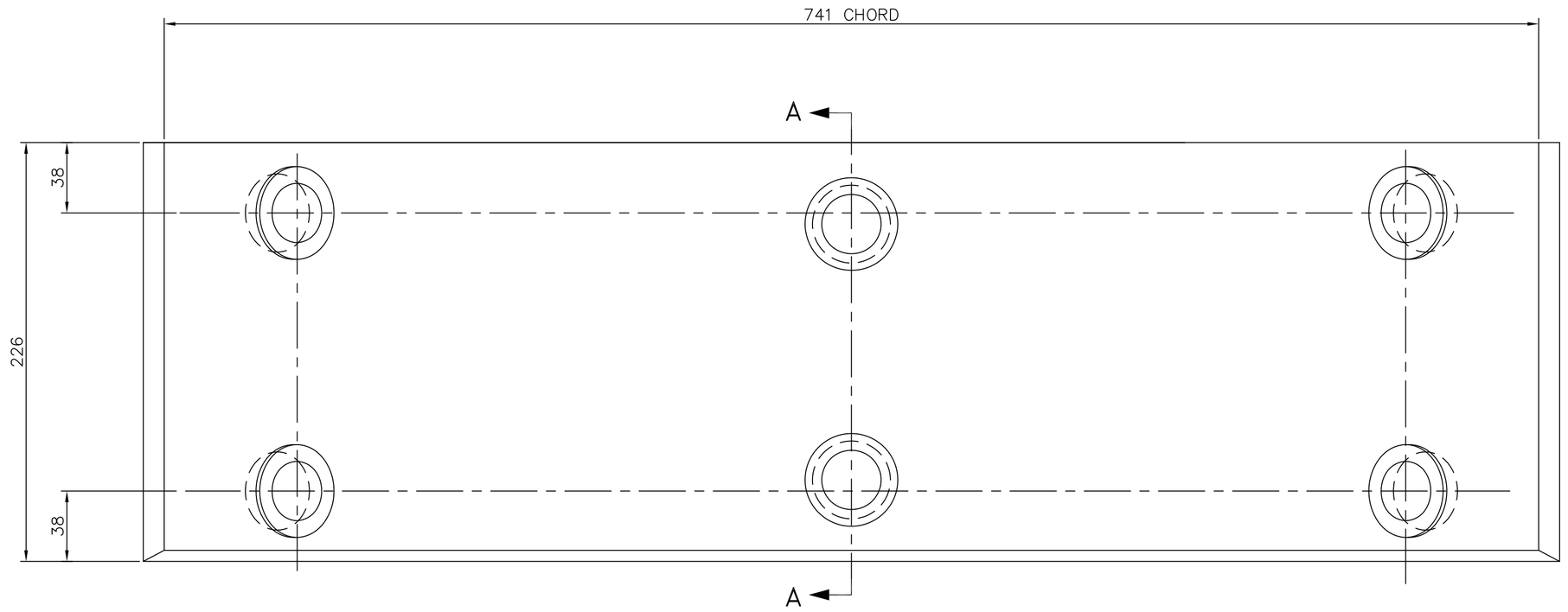

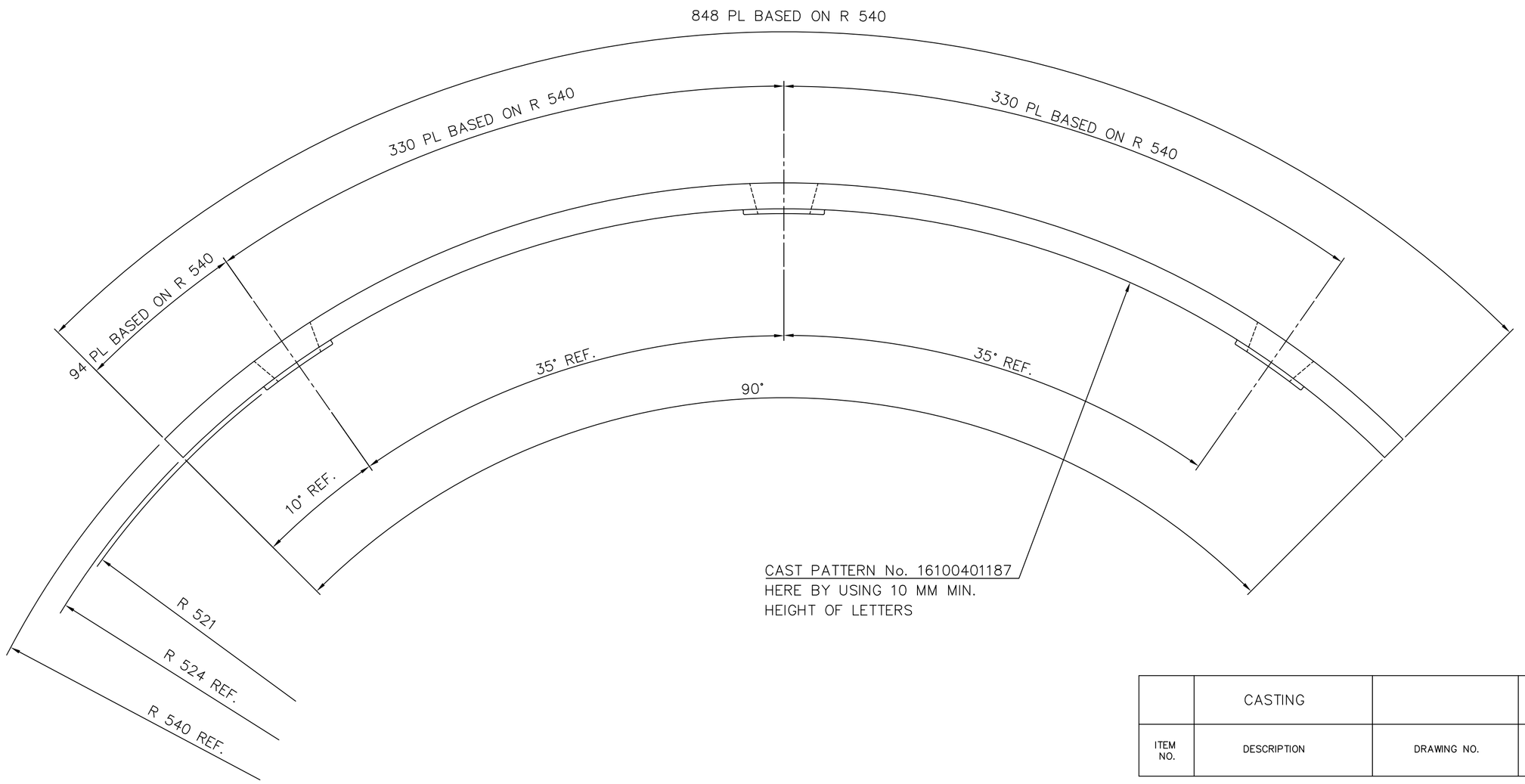

CAST PATTERN No. 16100401187
HERE BY USING 10 MM MIN.
HEIGHT OF LETTERS

ITEM NO.	DESCRIPTION	DRAWING NO.	VAR. NO.	RAW MATERIAL SIZE OR CASTING DRG. NO. OR FORGING DRG. NO.	MATERIAL CODE	NET WT.	GROSS WT.
	CASTING				BA9114135183	24.00	
					AA 19741		
					MATERIAL SPECN.	QUANTITY	

THE FOLLOWING CONDITIONS APPLY EXCEPT OTHERWISE STATED.

1. REF. TO HY0230261 FOR UNSPECIFIED TOLERANCES.
2. CHAMFER M/CD. SHARP EDGES 1.2 TO 1.0 AT 45°.
3. INTERNAL M/CD. CORNER RADII 1 TO 0.7
4. THE SURFACE ROUGHNESS WHERE-EVER NOT SHOWN SHALL BE TAKEN FROM THE SURFACE ROUGHNESS SHOWN OUT SIDE THE BACK SLASH GIVEN OR THE TOP MOST RIGHT CORNER OF THE DRG.

TYPE OF PRODUCT: 1103 BOWL MILL

NAME OF CUSTOMER/PROJECT

BHARAT HEAVY ELECTRICALS LIMITED HYDERABAD

	NAME	SIGN.	DATE	NO.OF VAR.
DRN.	C.C.S		12.06.99	
CHD.	E.M.A		12.06.99	
APPD.	K.M.RAO		12.06.99	

DEPT.	UNTOL. DIMS. GR.		SCALE	WEIGHT (KG)	REF. TO ASSY DRG.	ITEM NO.	NO.OF ITEMS
PULV. CODE 446	¢/M/F		1:2	24.00	1-61-004-01189 (D-110-00967/0)		

TITLE: JOURNAL HEAD LINER

CARD CODE

DRAWING NO. 1-61-004-01187 REV. 01

SHEET NO. 01 NO OF SHEETS 01

REV.	DATE	ALTERED	CHD./APPD.	ZONE
01	12.06.99	DRAWING REDRAWN IN AUTOCAD		

INVENTORY NO | SIGN. AND DATE | REF. DRG. NO. (D-110-00967/0) | COMPUTER FILE NAME 16101187.DWG

THE INFORMATION ON THIS DOCUMENT IS THE PROPERTY OF BHARAT HEAVY ELECTRICALS LIMITED.
IT MUST NOT BE USED DIRECTLY OR INDIRECTLY IN ANY WAY DETERMENTAL TO THE INTEREST OF THE COMPANY

FIRST ANGLE PROJECTION

(ALL DIMENSIONS ARE IN mm)

DRG. NO. 1-61-004-01188 SH. 01 OF 01

TYPE OF WELD	LENGTH OF WELD IN M	W.P.S
6 ▷	0.1M	WE:006

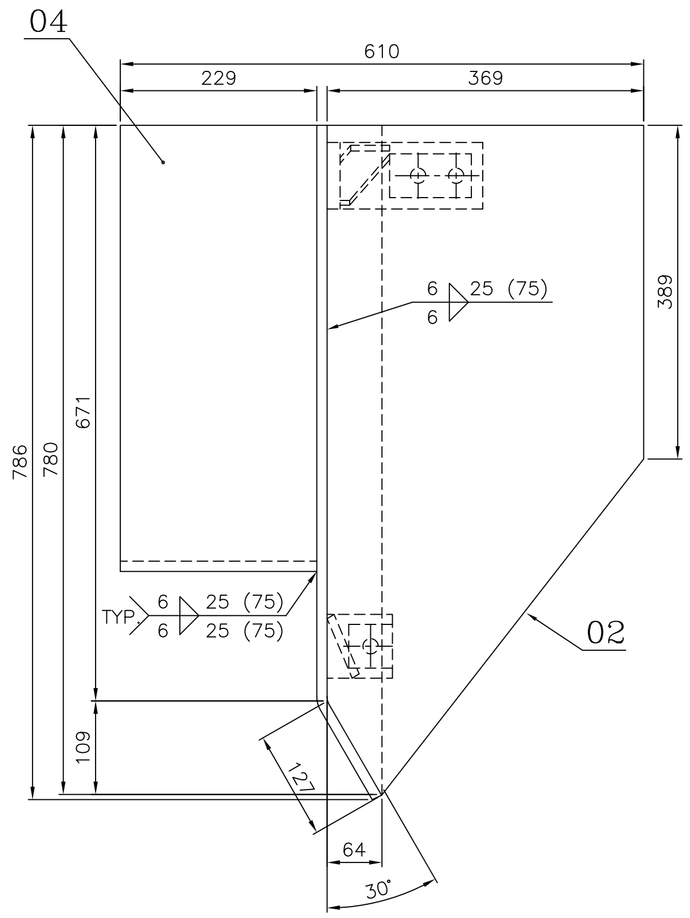

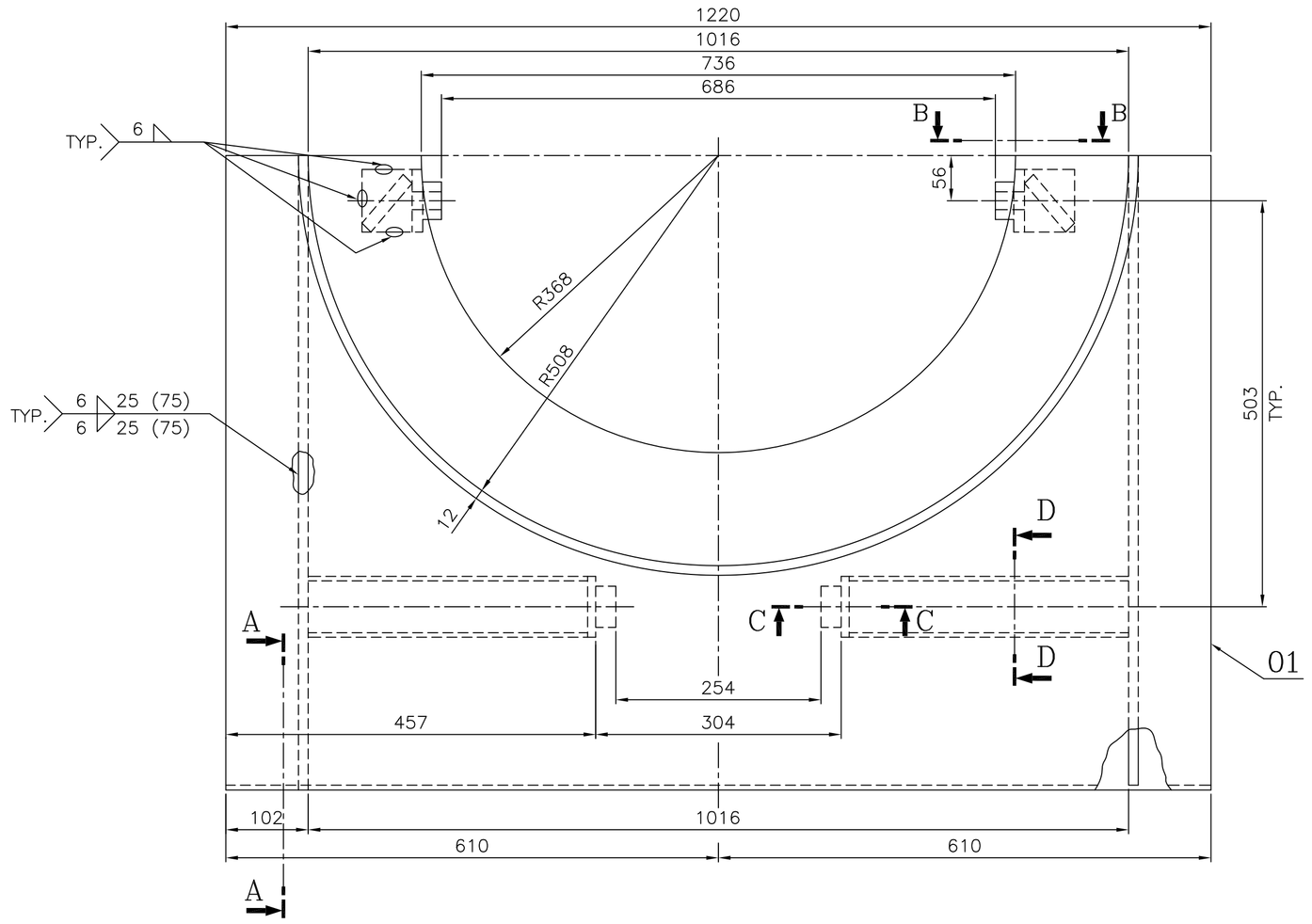

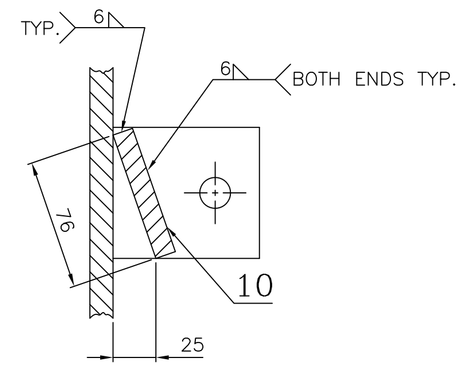

SECTION D–D

NOTE:–

01. BREAK ALL SHARP EDGES AND CORNERS UNLESS OTHERWISE NOTED.

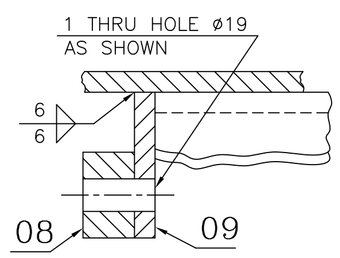

SECTION C–C
TYP

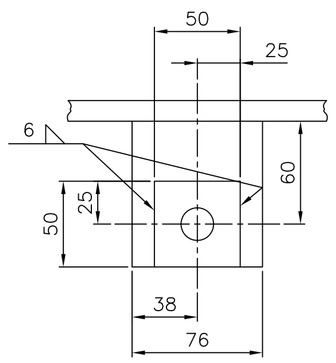

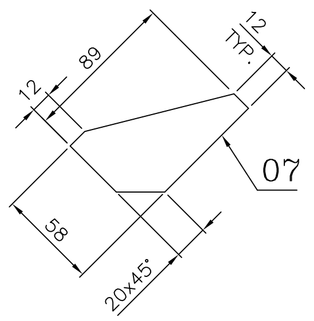

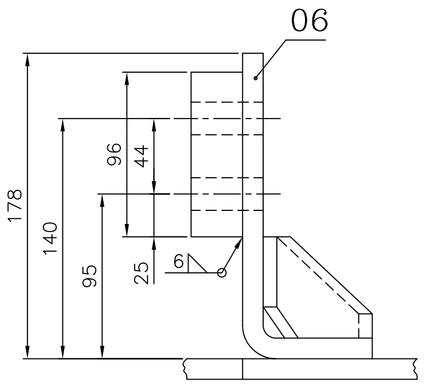

VIEW B–B
TYP.

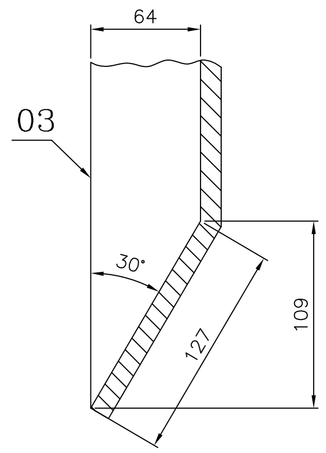

SECTION A–A

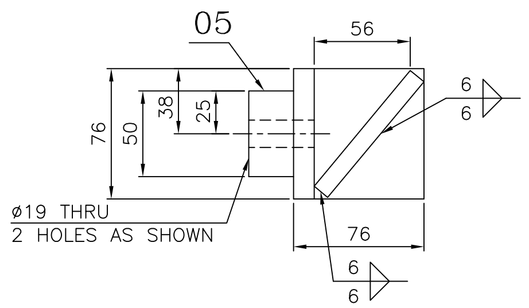

GENERAL DIMENSIONS LIMITS, FITS & TOLERANCES AS PER P.S. HY0230261

ITEM NO.	DESCRIPTION	DRAWING NO.	VAR NO.	RAW MATERIAL SIZE OR CASTING DRG. NO. OR FORGING DRG. NO.	MATERIAL CODE / MATERIAL SPECN.	NET WT. / QUANTITY	GROSS WT
10	PL. 12x76x344				AA1011819090	2.500	
					AA10119	2	
09	PL. 12x85x76				AA1011819090	0.600	
					AA10119	2	
08	PL. 25x50x50				AA1011819155	0.500	
					AA10119	2	
07	PL. 12x58x89				AA1011819090	0.320	
					AA10119	2	
06	PL. 20x76x221				AA1011819139	2.630	
					AA10119	2	
05	PL. 25x50x96				AA1011819155	0.940	
					AA10119	2	
04	PL. 12x229x1615				AA1011819090	34.800	
					AA10119	1	
03	PL. 12x780x64				AA1011819090	4.400	
					AA10119	1	
02	PL. 12x780x369				AA1011819090	12.700	
					AA10119	1	
01	PL. 12x798x1219				AA1011819090	71.600	
					AA10119	1	

THE FOLLOWING CONDITIONS APPLY EXCEPT OTHERWISE STATED.

1. REF. TO HY0230261 FOR UNSPECIFIED TOLERANCES.
2. CHAMFER M/CD. SHARP EDGES 1.2 TO 1.0 AT 45°
3. INTERNAL M/CD. CORNER RADII 1 TO 0.7
4. THE SURFACE ROUGHNESS WHERE–EVER NOT SHOWN SHALL BE TAKEN FROM THE SURFACE ROUGHNESS SHOWN OUT SIDE THE BACK SLASH GIVEN ON THE TOP MOST RIGHT CORNER OF THE DRG.

TYPE OF PRODUCT
NAME OF CUSTOMER/PROJECT: 1103 XRP BOWL MILL

BHARAT HEAVY ELECTRICALS LIMITED
HYDERABAD

	NAME	SIGN.	DATE	NO.OF VAR.
DRN.	UNIC			–
CHD.	EMAK/NDS		22.05.99	
APPD.	S.GHATGE		22.05.99	

DEPT.	UNTOL. DIMS. GR.		SCALE	WEIGHT (KG)	REF. TO ASSY DRG.	ITEM NO.	NO.OF ITEMS
PULV ENGG. CODE 446	¢/M/F		1:2.5, 1:5	143.480	1-61-004-01189	–	–

TITLE: JOURNAL HEAD LINER SUPPORT

CARD CODE: /

DRAWING NO. 1-61-004-01188 REV. 01

SHEET NO. 01 NO OF SHEETS 01

REV.	DATE	ALTERED	APPD.	REV.	DATE	ALTERED	APPD.	REV.	DATE	ALTERED	APPD.
		CHD.				CHD.		01	22.05.99	CHD.	
ZONE				ZONE				ZONE		DRAWING REDRAWN ON ACAD.	

THE INFORMATION ON THIS DOCUMENT IS THE PROPERTY OF BHARAT HEAVY ELECTRICALS LIMITED. IT MUST NOT BE USED DIRECTLY OR INDIRECTLY IN ANY WAY DETRIMENTAL TO THE INTEREST OF THE COMPANY

INVENTORY NO | SIGN. AND DATE | REF. DRG. NO. 1-61-004-01189 | COMPUTER FILE NAME 16101188.DWG

FIRST ANGLE PROJECTION

(ALL DIMENSIONS ARE IN mm)

C.C.S

DRG. NO. 1-61-004-01189

THE INFORMATION ON THIS DOCUMENT IS THE PROPERTY OF BHARAT HEAVY ELECTRICALS LIMITED.
IT MUST NOT BE USED DIRECTLY OR INDIRECTLY IN ANY WAY DETRIMENTAL TO THE INTEREST OF THE COMPANY

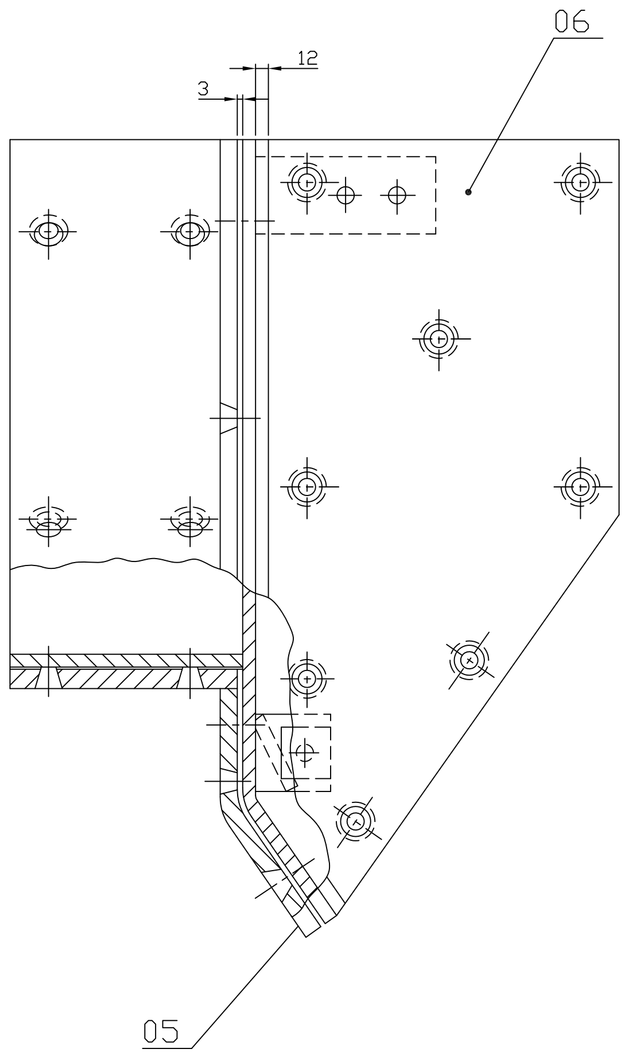

SECTION B-B

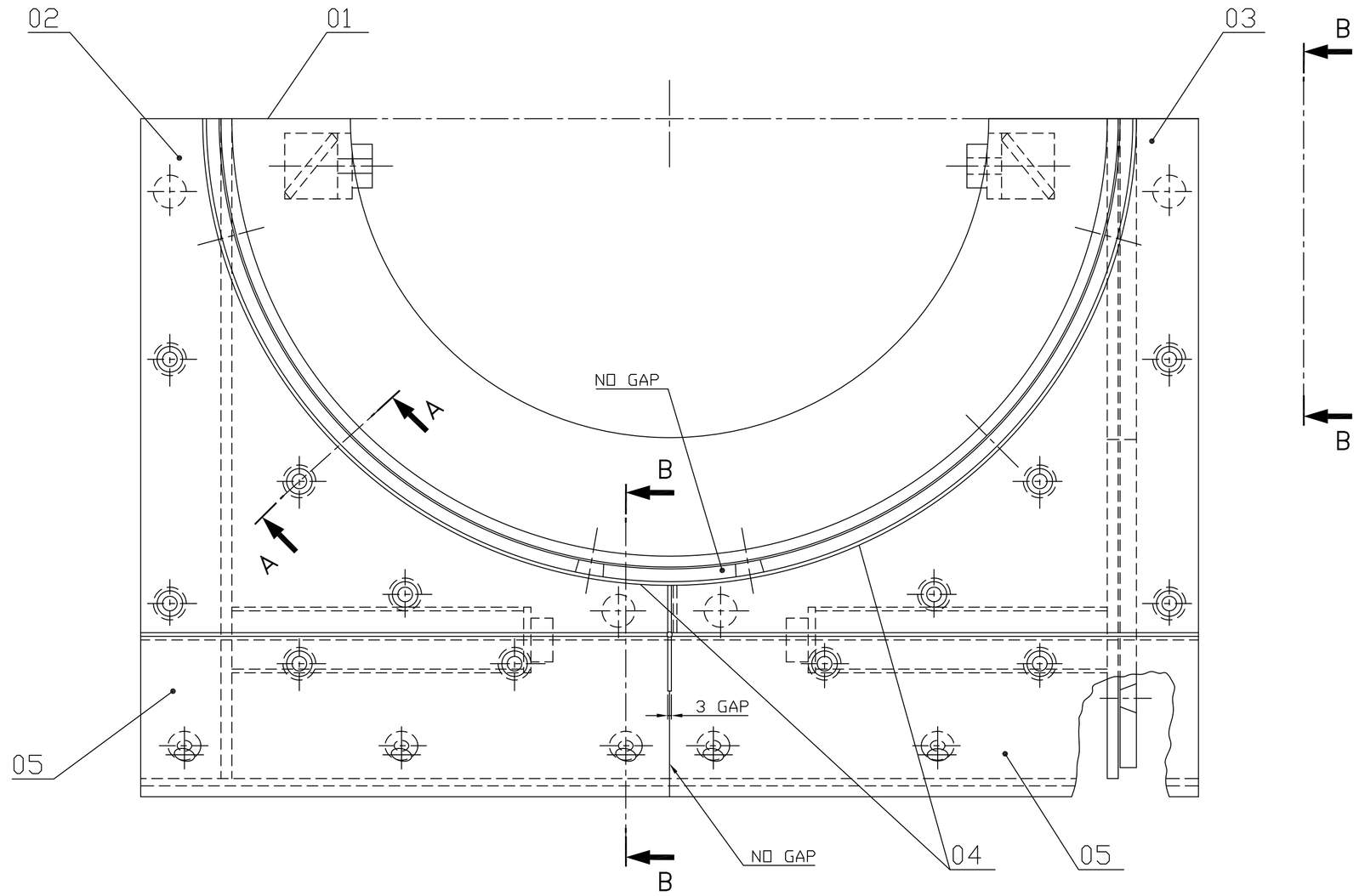

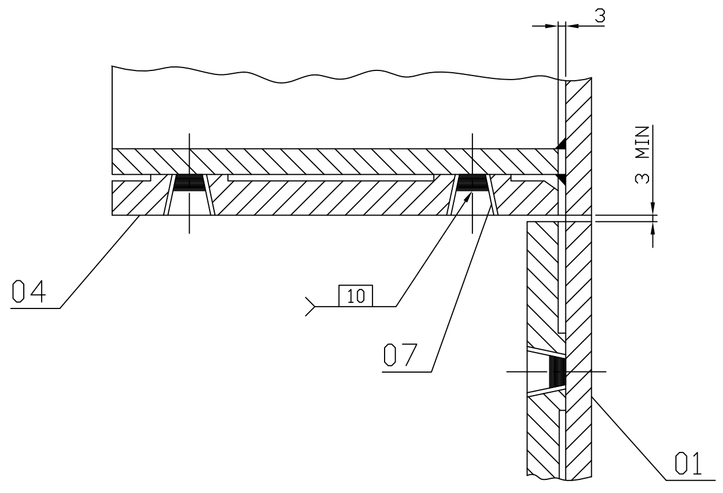

SECTION A-A

(ROTATED 45° C.W)

NOTES:-

1. APPLY RTV SEALER TO ALL LINER JOINTS AT ASSEMBLY. AFTER WELD PLUG APPLICATION FILL VOLD WITH SEALER UNTIL FLUSH WITH LINER SURFACES.
2. SEE DWG. 4-61-080-00797 FOR APPLICATION OF WELD PLUGS
3. CAUTION TO INSTALLER 'STRICT COMPLIANCE WITH ASSEMBLY PROCEDURE IS MANDATORY. FAILURE TO DO SO MAY RESULT IN DAMAGE TO THESE AND OTHER COMPONENTS DURING OPERATION FOR WHICH THE INSTALLER MUST RESPOSIBILITY.

ITEM NO.	DESCRIPTION	DRAWING NO.	VAR. NO.	RAW MATERIAL SIZE OR CASTING DRG. NO. OR FORGING DRG. NO.	MATERIAL CODE / MATERIAL SPECN.	NET WT. / QUANTITY	GROSS WT.
07	WELD PLUG	4-61-162-00749				0.13 / 36	
06	JOURNAL HD. LINER	2-61-004-02259				26.700 / 1	
05	JOURNAL HD. LINER	2-61-004-02258				16.200 / 2	
04	JOURNAL HD. LINER	1-61-004-01187				24.00 / 2	
03	JOURNAL HEAD LINER	2-61-004-02267				17.200 / 1	
02	JOURNAL HEAD LINER	2-61-004-02268				17.200 / 1	
01	JOUR-HD-LINER SUPPORT	1-61-004-01188				143.480 / 1	

REV.	DATE	ALTERED	REV.	DATE	ALTERED	REV.	DATE	ALTERED
		CHD./APPD.			CHD./APPD.	01	09.06.99	CHD./APPD.
ZONE			ZONE			ZONE		DRAWING REDRAWN IN AUTO-CAD

THE FOLLOWING CONDITIONS APPLY EXCEPT OTHERWISE STATED.

1. REF. TO HY0230261 FOR UNSPECIFIED TOLERANCES.
2. CHAMFER M/CD. SHARP EDGES 1.2 TO 1.0 AT 45°.
3. INTERNAL M/CD. CORNER RADII 1 TO 0.7
4. THE SURFACE ROUGHNESS WHERE-EVER NOT SHOWN SHALL BE TAKEN FROM THE SURFACE ROUGHNESS SHOWN OUT SIDE THE BACK SLASH GIVEN OR THE TOP MOST RIGHT CORNER OF THE DRG.

TYPE OF PRODUCT: 1103 XRP BOWL MILL

NAME OF CUSTOMER/PROJECT

BHARAT HEAVY ELECTRICALS LIMITED HYDERABAD

	NAME	SIGN.	DATE	NO.OF VAR.
DRN.	C.C.S		09.06.99	
CHD.	E.M.A		09.06.99	
APPD.	K.M.RAO		09.06.99	

DEPT. PUL.V. CODE 446	UNTOL. DIMS. GR. ¢/M/F	SCALE N.T.S	WEIGHT (KG) 290.00	REF. TO ASSY DRG. 0-61-004-00570	ITEM NO. –	NO.OF ITEMS 05

TITLE: JOURNAL HEAD LINER ASSEMBLY

CARD CODE

DRAWING NO. 1-61-004-01189 REV. 01

SHEET NO. 01 NO OF SHEETS 01

INVENTORY NO	SIGN. AND DATE	REF. DRG. NO.	COMPUTER FILE NAME
		0-61-004-00570	161011899.DWG

FIRST ANGLE PROJECTION

(ALL DIMENSIONS ARE IN mm)

POORNIMA CAD

DRG. NO. 1-61-304-01175

THE INFORMATION ON THIS DOCUMENT IS THE PROPERTY OF BHARAT HEAVY ELECTRICALS LIMITED.
IT MUST NOT BE USED DIRECTLY OR INDIRECTLY IN ANY WAY DETRIMENTAL TO THE INTEREST OF THE COMPANY

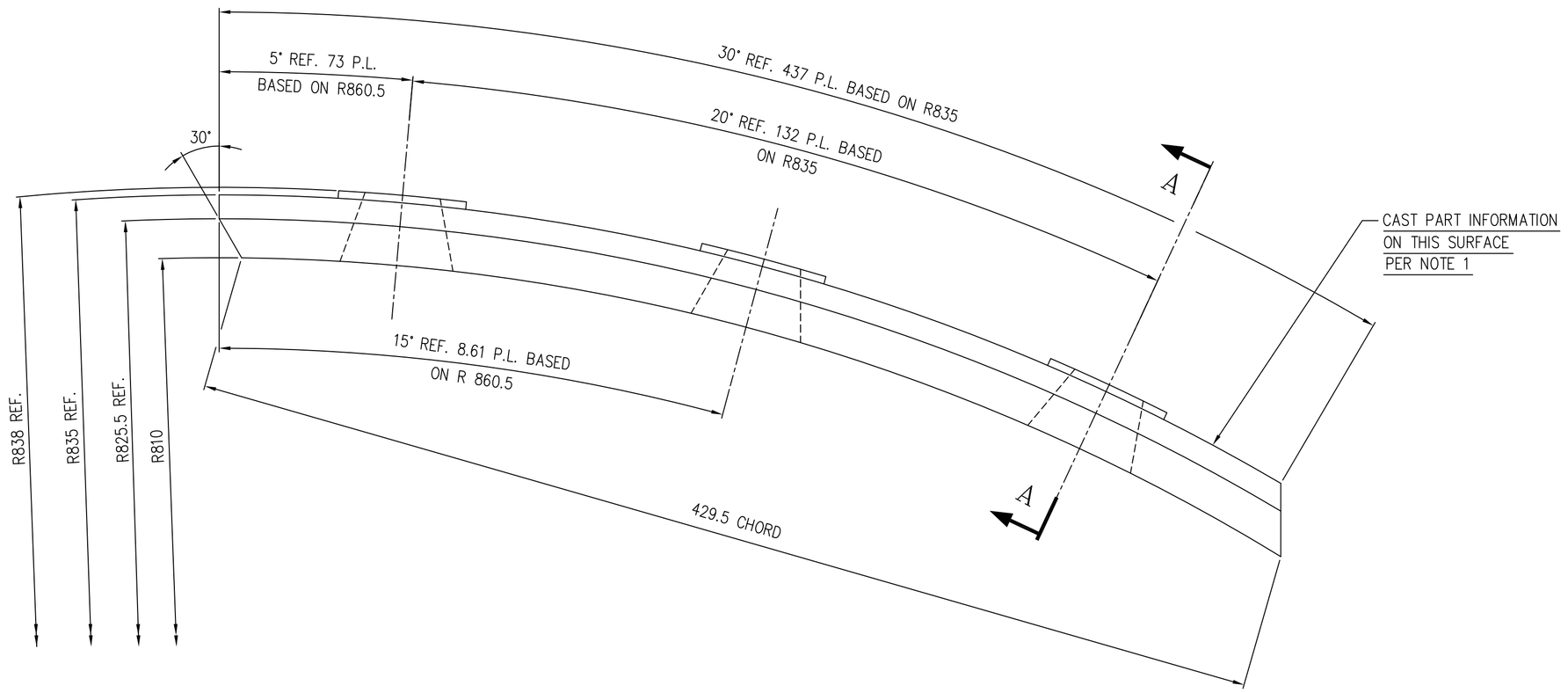

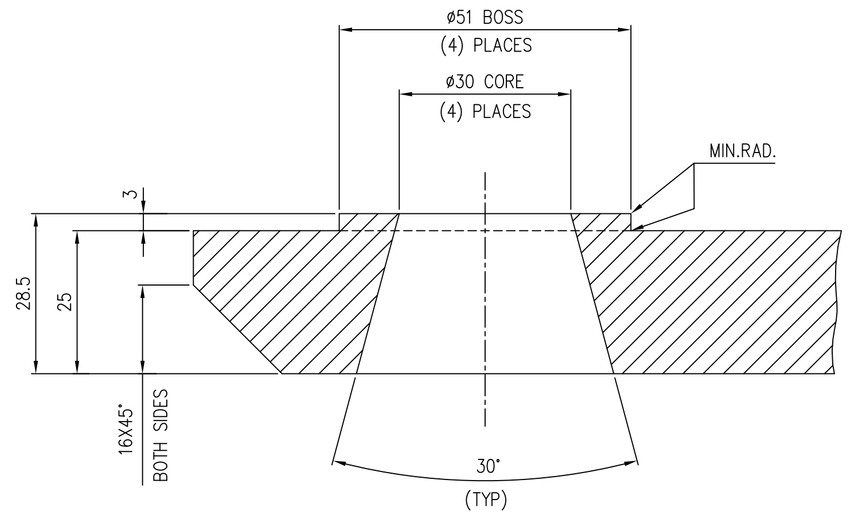

SECTION 'B–B'

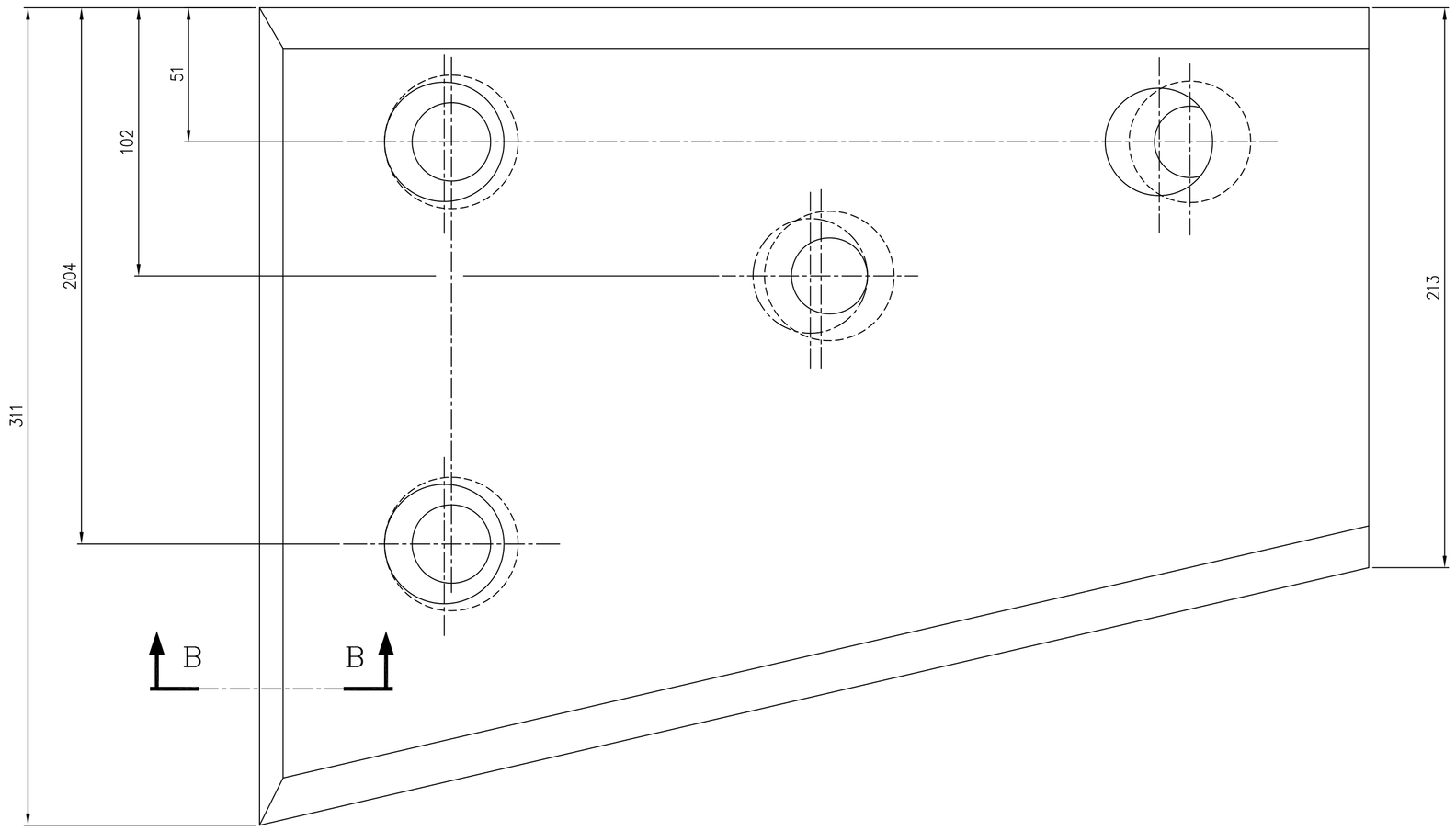

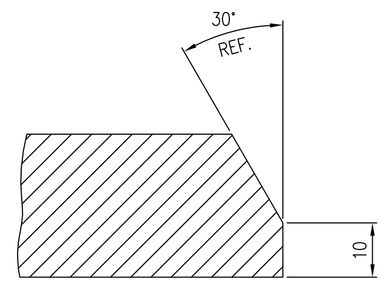

SECTION 'B–B'

NOTE:–

1. FOOLOWING INFORMATION TO BE CAST INTO PART USING 3MAX. HEIGHT IF RAISED LETTERS USED. C.E. 110–00806 (W/CURRENT DWG. REV.N2) CROWN 700 PAT. PENDING.

ITEM NO	DESCRIPTION	DRAWING NO.	VAR. NO.	RAW MATERIAL SIZE OR CASTING DRG.NO. OR FORGING DRG.NO.	MATERIAL CODE / MATERIAL SPECN.	NET WT.	GROSS WT. / QUANTITY

THE FOLLOWING CONDITIONS APPLY EXCEPT OTHERWISE STATED...

1. REF.TO HY0230261 FOR UNSPECIFIED TOLERANCES.
2. CHAMFER M/CD SHARP EDGES 1.2 TO 1.0 AT 45°.
3. INTERNAL M/CD CORNER RADII 1 TO 0.7.
4. THE SURFACE ROUGHNESS WHEREVER NOT SHOWN SHALL BE TAKEN FROM THE SURFACE ROUGHNESS SHOWN OUT SIDE BACK SLASHES GIVEN AT THE TOP MOST RIGHT CORNER OF THE DRG.

TYPE OF PRODUCT
OR
NAME OF CUSTOMER/PROJECT

BHARAT HEAVY ELECTRICALS LTD.
HYDERABAD

	NAME	SIGN.	DATE	NO.OF VAR.
DRN.	ACAD		22.5.99	–NA–
CHD.	N.D.SAMUEL		22.5.99	
APPD.	S.GHATGE		22.5.99	

DEPT.	SCALE	WEIGHT (KG)	REF. TO ASSY DRG.	ITEM NO.	NO.OF ITEMS
PULV.ENGG.	1:1.5	–NA–	D–110–00806	–NA–	–NA–
CODE 446					

TITLE: JOURNAL OPENING FRAME LINER

DRAWING NO. 1–61–304–01175 REV. 00

SHEET NO. 01 NO OF SHEETS 01

REV.	DATE	ALTERED / CHECKED	APPD.
ZONE			

INVENTORY NO | SIGN. AND DATE | REF. DRG. NO. | COMPUTER FILE NAME : 16101175.DWG

FIRST ANGLE PROJECTION (ALL DIMENSIONS ARE IN mm) C.C.S.

DRG. NO. 1-61-304-01176

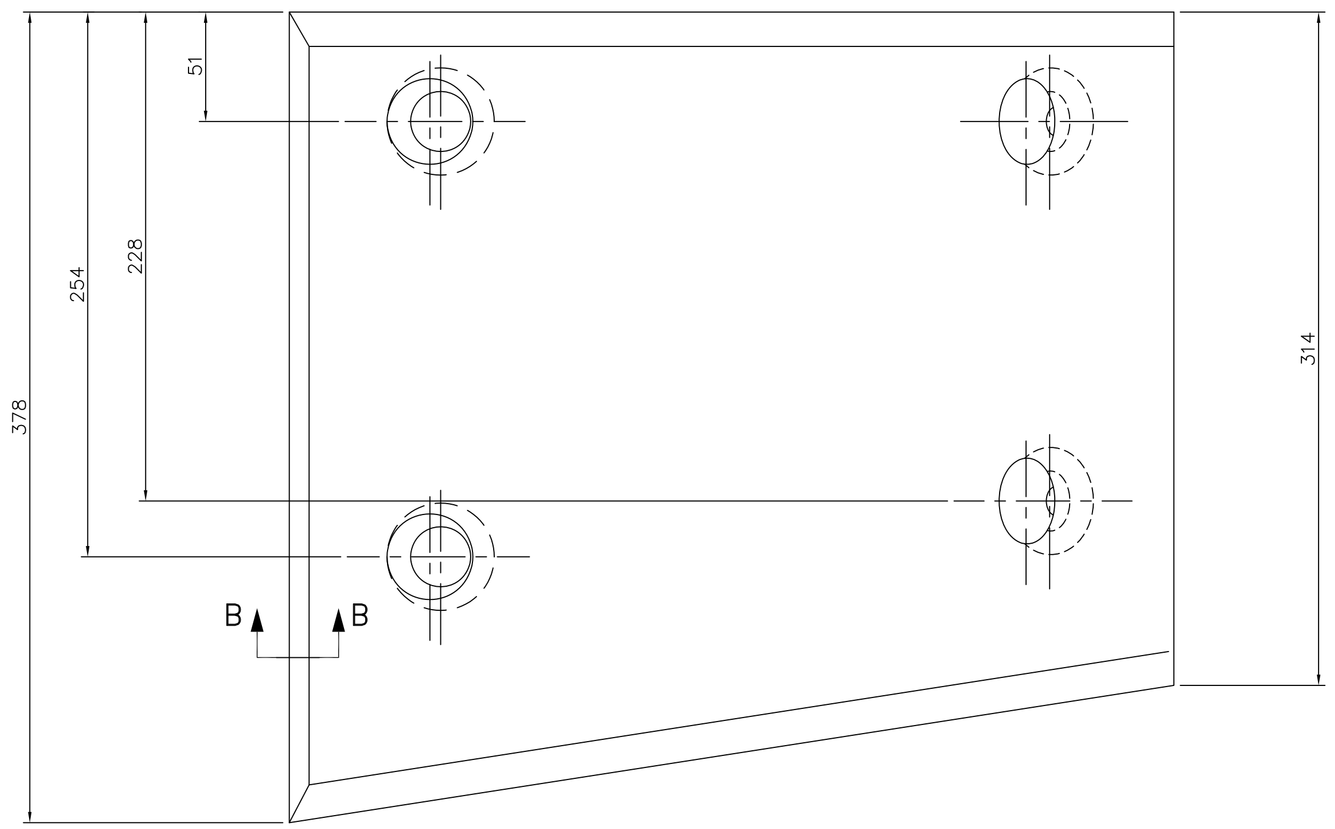

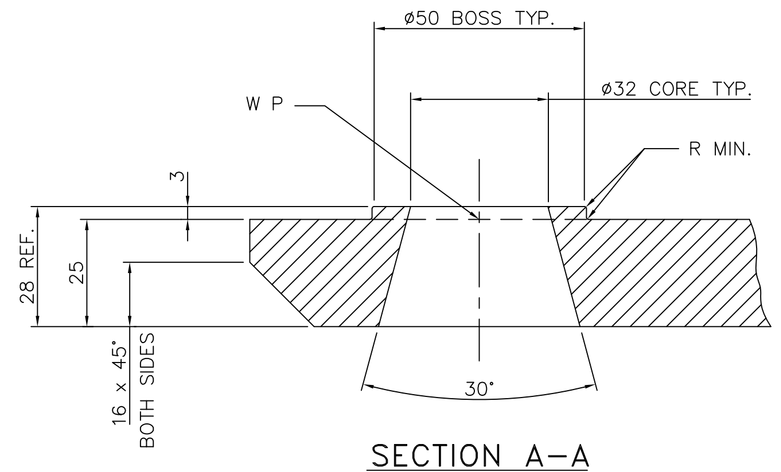

SECTION A–A

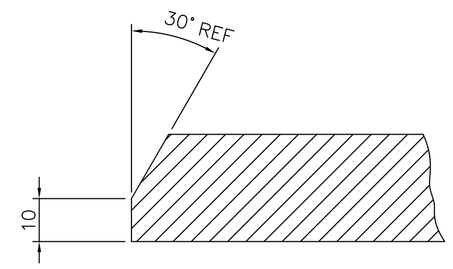

SECTION B–B

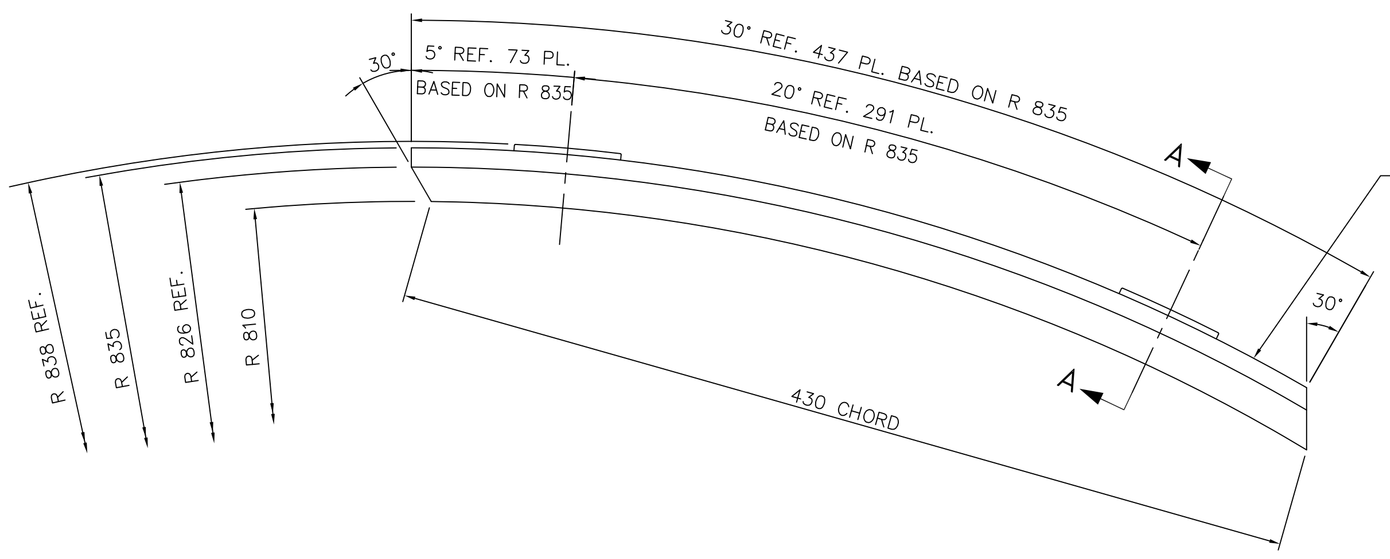

CAST PATTERN No. 16130401176 ON THIS SURFACE BY USING 10 MM MIN. HEIGHT OF LETTERS

ITEM NO.	DESCRIPTION	DRAWING NO.	VAR. NO.	RAW MATERIAL SIZE OR CASTING DRG. NO. OR FORGING DRG. NO.	MATERIAL CODE / MATERIAL SPECN.	NET WT.	GROSS WT. / QUANTITY
	CASTING				BA9114135248 / AA 19741	22.00	

THE FOLLOWING CONDITIONS APPLY EXCEPT OTHERWISE STATED.

1. REF. TO HY0230261 FOR UNSPECIFIED TOLERANCES.
2. CHAMFER M/CD. SHARP EDGES 1.2 TO 1.0 AT 45°.
3. INTERNAL M/CD. CORNER RADII 1 TO 0.7
4. THE SURFACE ROUGHNESS WHERE-EVER NOT SHOWN SHALL BE TAKEN FROM THE SURFACE ROUGHNESS SHOWN OUT SIDE THE BACK SLASH GIVEN OR THE TOP MOST RIGHT CORNER OF THE DRG.

TYPE OF PRODUCT: 1103 XRP BOWL MILL

NAME OF CUSTOMER/PROJECT

BHARAT HEAVY ELECTRICALS LIMITED HYDERABAD

	NAME	SIGN.	DATE	NO.OF VAR.
DRN.	C.C.S		17.6.99	
CHD.	N.D.SAMUEL		17.6.99	
APPD.	S.GHATGE		17.6.99	

DEPT.	UNTOL. DIMS. GR.	SCALE	WEIGHT (KG)	REF. TO ASSY DRG.	ITEM NO.	NO.OF ITEMS
PUL.V. CODE 446	¢/M/F	1:2	22.00	(D-110-00808/1)		

TITLE: J O F LINER

CARD CODE

DRAWING NO. 1-61-304-01176 REV. 01

SHEET NO. 01 NO OF SHEETS 01

REV.	DATE	ALTERED	CHD./APPD.
01	15.6.99	DRAWING REDRAWN IN AUTOCAD	

ZONE

INVENTORY NO | SIGN. AND DATE | REF. DRG. NO. (D-110-00808/1) | COMPUTER FILE NAME 16101176.DWG

THE INFORMATION ON THIS DOCUMENT IS THE PROPERTY OF BHARAT HEAVY ELECTRICALS LIMITED.
IT MUST NOT BE USED DIRECTLY OR INDIRECTLY IN ANY WAY DETERMENTAL TO THE INTEREST OF THE COMPANY

FIRST ANGLE PROJECTION (ALL DIMENSIONS ARE IN mm) C.C.S.

DRG. NO. 1-61-304-01177

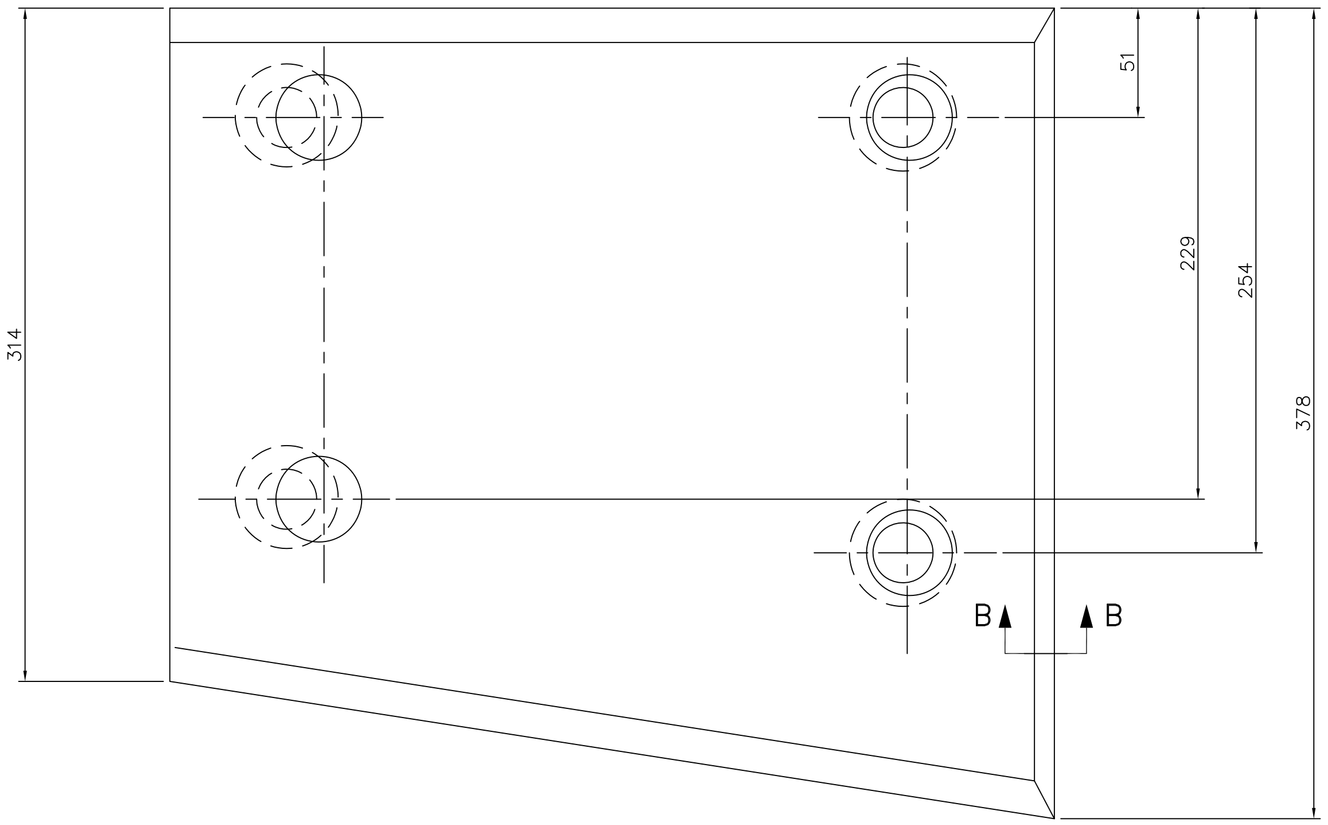

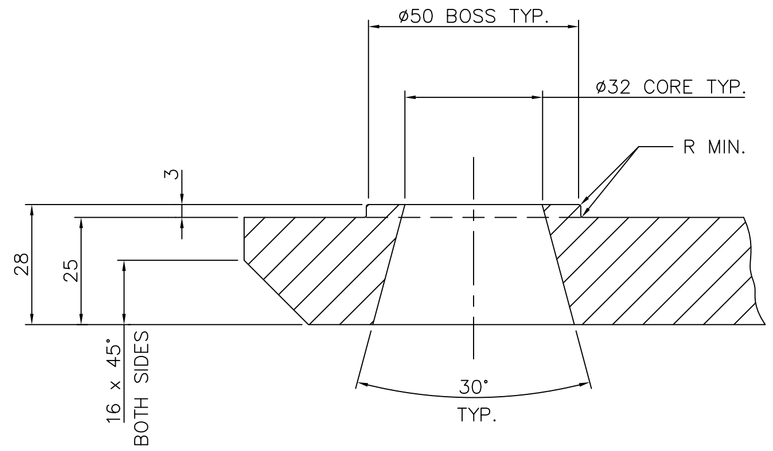

SECTION A–A

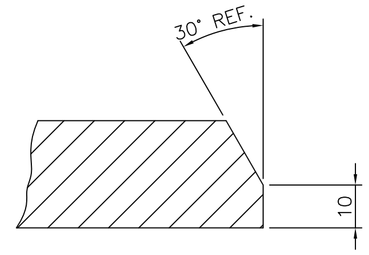

SECTION B–B

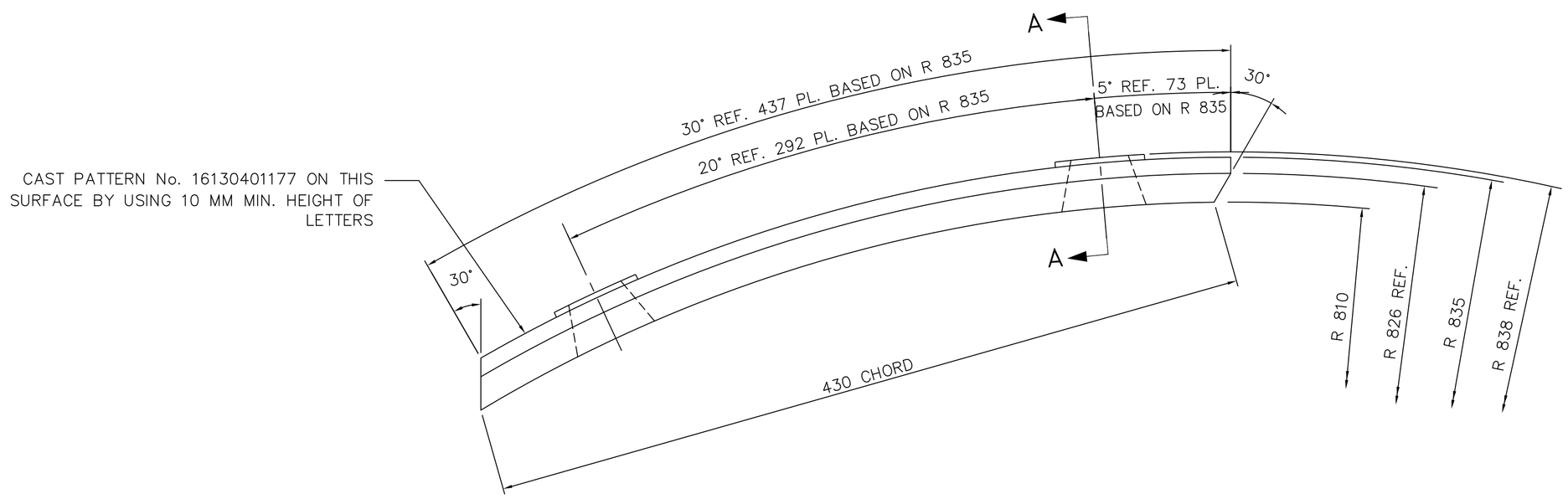

ITEM NO.	DESCRIPTION	DRAWING NO.	VAR. NO.	RAW MATERIAL SIZE OR CASTING DRG. NO. OR FORGING DRG. NO.	MATERIAL CODE / MATERIAL SPECN.	NET WT.	GROSS WT. / QUANTITY
	CASTING				AA 19741	28.00	

THE FOLLOWING CONDITIONS APPLY EXCEPT OTHERWISE STATED.

1. REF. TO HY0230261 FOR UNSPECIFIED TOLERANCES.
2. CHAMFER M/CD. SHARP EDGES 1.2 TO 1.0 AT 45°.
3. INTERNAL M/CD. CORNER RADII 1 TO 0.7
4. THE SURFACE ROUGHNESS WHERE-EVER NOT SHOWN SHALL BE TAKEN FROM THE SURFACE ROUGHNESS SHOWN OUT SIDE THE BACK SLASH GIVEN OR THE TOP MOST RIGHT CORNER OF THE DRG.

TYPE OF PRODUCT: CHANDRAPUR 500 MW
NAME OF CUSTOMER/PROJECT: 1043 RP

BHARAT HEAVY ELECTRICALS LIMITED HYDERABAD

	NAME	SIGN.	DATE	NO.OF VAR.
DRN.	C.C.S		15.6.99	
CHD.	N.D.SAMUEL		15.6.99	
APPD.	S.GHATGE		15.6.99	

DEPT.	UNTOL. DIMS. GR.		SCALE	WEIGHT (KG)	REF. TO ASSY DRG.	ITEM NO.	NO.OF ITEMS
PUL.V. CODE 446	¢/M/F		1:2	28.00	(D-110-00809/1)		

TITLE: J O F LINER

CARD CODE

DRAWING NO. 1-61-304-01177 REV. 01

SHEET NO. 01 NO OF SHEETS 01

REV.	DATE	ALTERED	REV.	DATE	ALTERED	REV.	DATE	ALTERED
		CHD./APPD.			CHD./APPD.	01	15.6.99	CHD./APPD.
ZONE			ZONE			ZONE		DRAWING REDRAWN IN AUTOCAD

THE INFORMATION ON THIS DOCUMENT IS THE PROPERTY OF BHARAT HEAVY ELECTRICALS LIMITED.
IT MUST NOT BE USED DIRECTLY OR INDIRECTLY IN ANY WAY DETERMENTAL TO THE INTEREST OF THE COMPANY

INVENTORY NO | SIGN. AND DATE | REF. DRG. NO. (D-110-00809/1) | COMPUTER FILE NAME 13041177.DWG

FIRST ANGLE PROJECTION

(ALL DIMENSIONS ARE IN mm)

DRG. NO. 1-61-304-01178

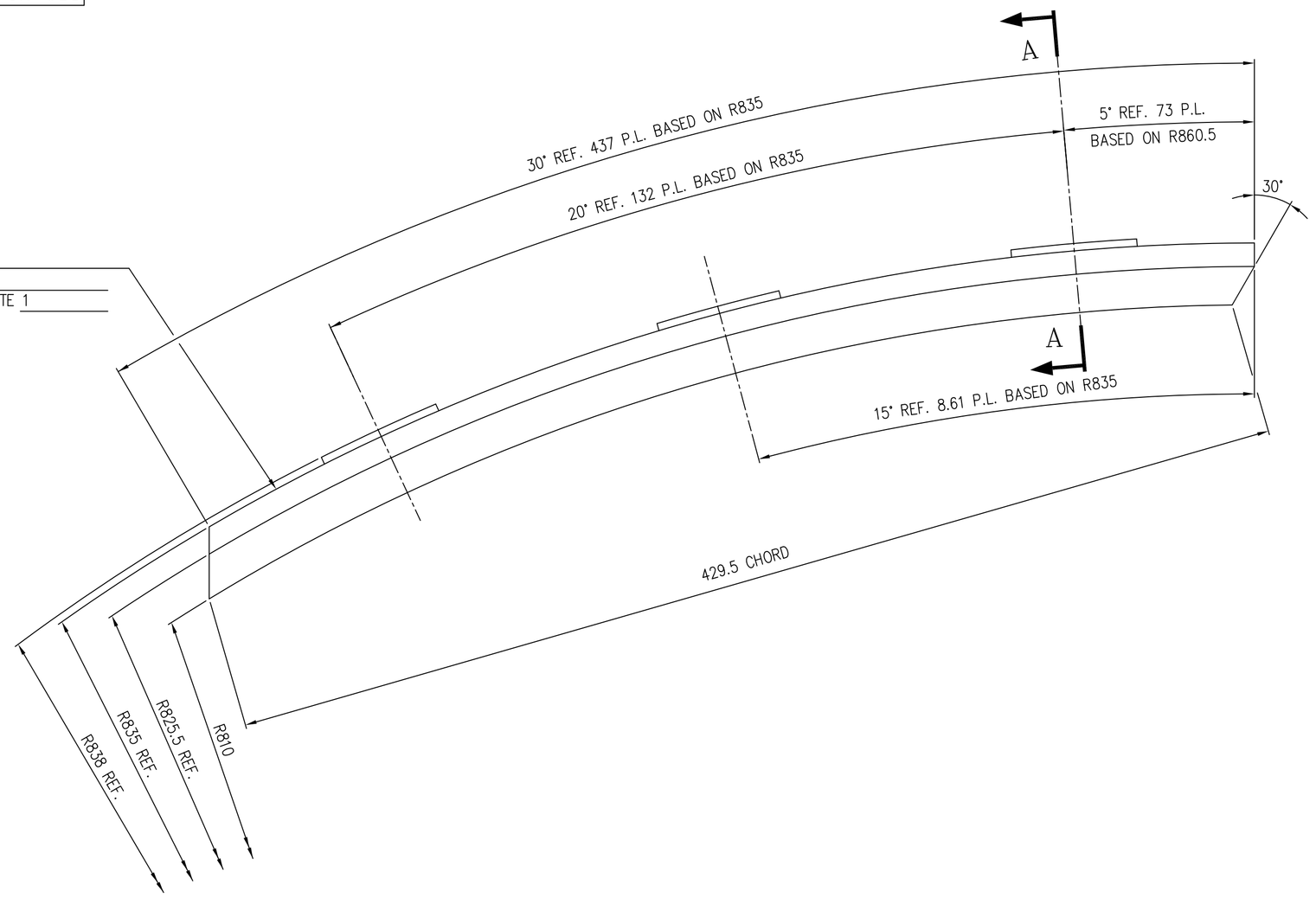

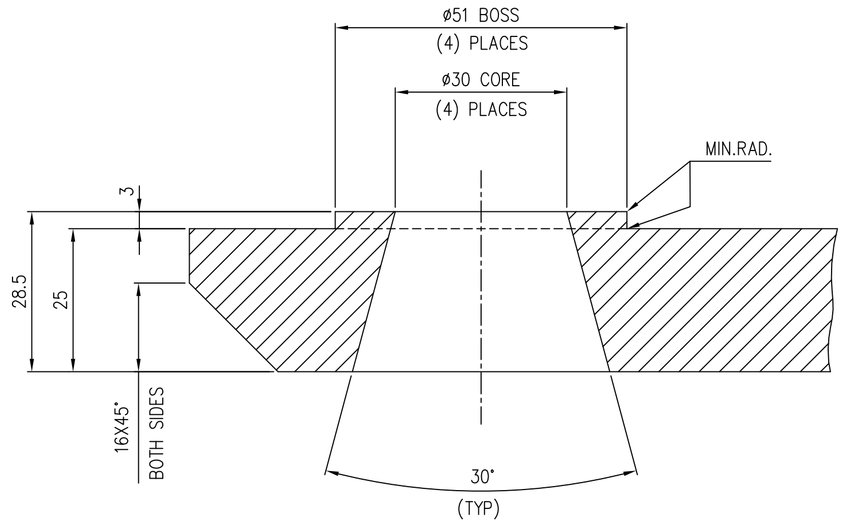

SECTION 'B–B'

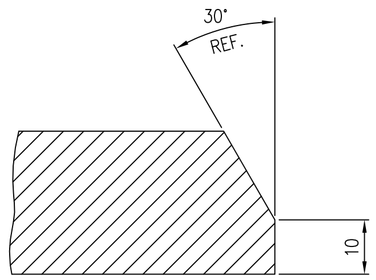

SECTION 'B–B'

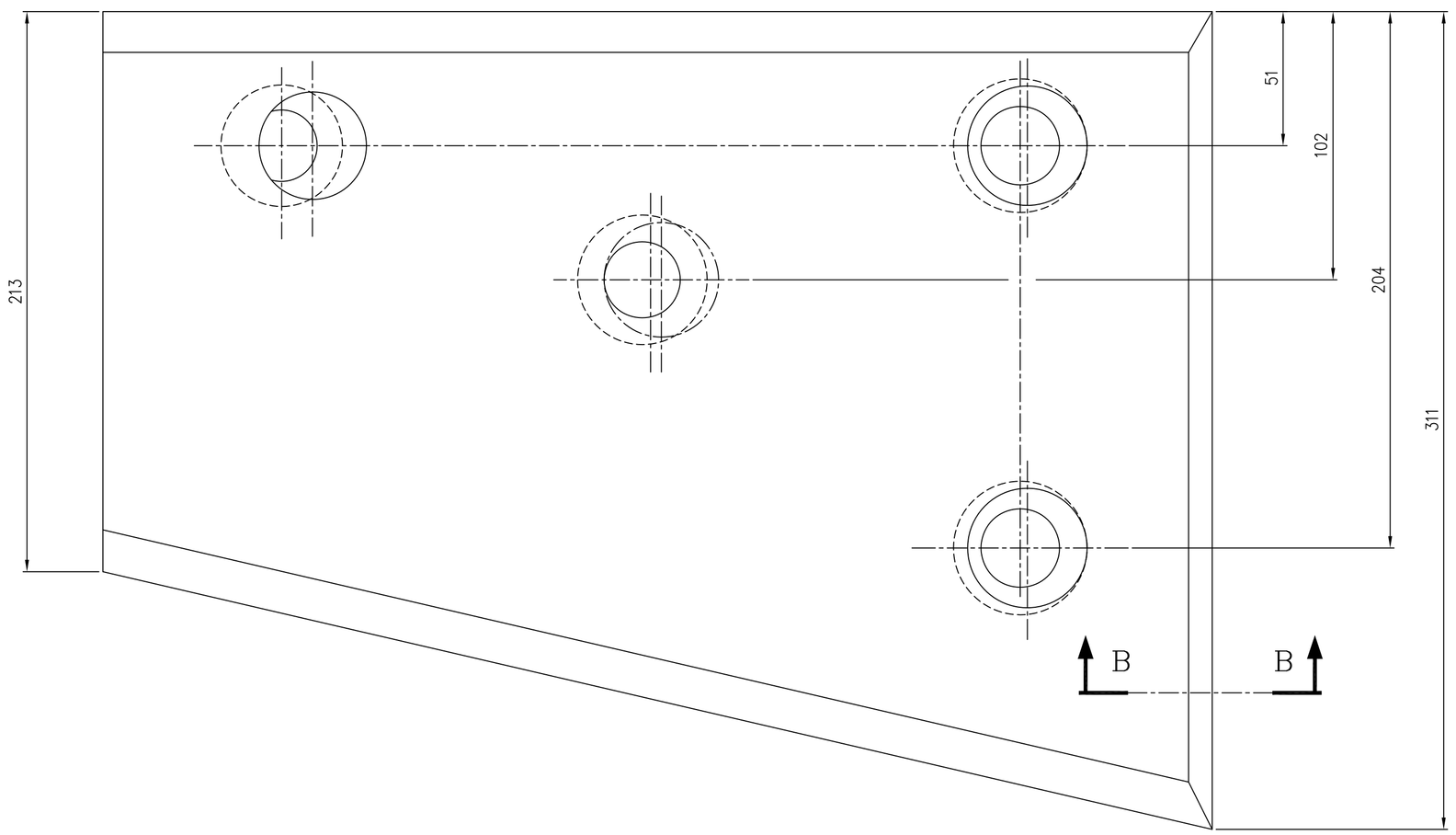

NOTE:–

1. FOOLOWING INFORMATION TO BE CAST INTO PART USING 3MAX. HEIGHT IF RAISED LETTERS USED. C.E. 110–00807 (W/CURRENT DWG. REV.N2) CROWN 700 PAT. PENDING.

ITEM NO	DESCRIPTION	DRAWING NO.	VAR. NO.	RAW MATERIAL SIZE OR CASTING DRG.NO. OR FORGING DRG.NO.	MATERIAL CODE / MATERIAL SPECN.	NET WT.	GROSS WT. / QUANTITY

THE FOLLOWING CONDITIONS APPLY EXCEPT OTHERWISE STATED...

1. REF.TO HY0230261 FOR UNSPECIFIED TOLERANCES.
2. CHAMFER M/CD SHARP EDGES 1.2 TO 1.0 AT 45°.
3. INTERNAL M/CD CORNER RADII 1 TO 0.7.
4. THE SURFACE ROUGHNESS WHEREVER NOT SHOWN SHALL BE TAKEN FROM THE SURFACE ROUGHNESS SHOWN OUT SIDE BACK SLASHES GIVEN AT THE TOP MOST RIGHT CORNER OF THE DRG.

TYPE OF PRODUCT
OR
NAME OF CUSTOMER/PROJECT

BHARAT HEAVY ELECTRICALS LTD.
HYDERABAD

	NAME	SIGN.	DATE	NO.OF VAR.
DRN.	ACAD		22.5.99	–NA–
CHD.	N.D.SAMUEL		22.5.99	
APPD.	S.GHATGE		22.5.99	

DEPT.	SCALE	WEIGHT (KG)	REF. TO ASSY DRG.	ITEM NO.	NO.OF ITEMS
CODE	1:1.5	–NA–	D–110–00807	–NA–	–NA–

TITLE: JOURNAL OPENING FRAME LINER

DRAWING NO. 1–61–304–01178 REV. 00

SHEET NO. NO OF SHEETS

REV.	DATE	ALTERED / CHECKED	APPD.
ZONE			

THE INFORMATION ON THIS DOCUMENT IS THE PROPERTY OF BHARAT HEAVY ELECTRICALS LIMITED.
IT MUST NOT BE USED DIRECTLY OR INDIRECTLY IN ANY WAY DETRIMENTAL TO THE INTEREST OF THE COMPANY

INVENTORY NO. SIGN. AND DATE REF. DRG. NO. COMPUTER FILE NAME :

FIRST ANGLE PROJECTION

(ALL DIMENSIONS ARE IN mm)

DRG. NO. 1_61_104_01182

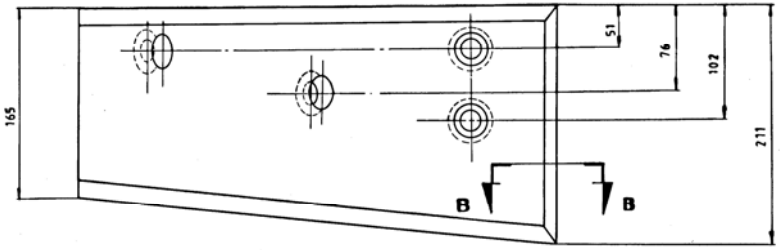

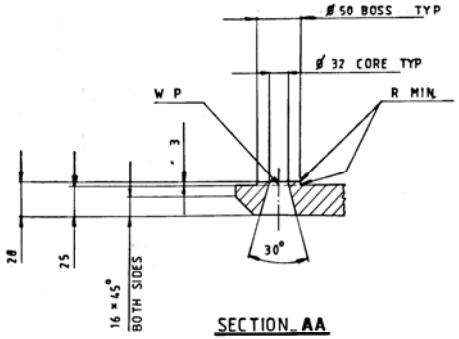

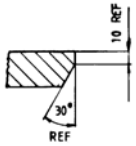

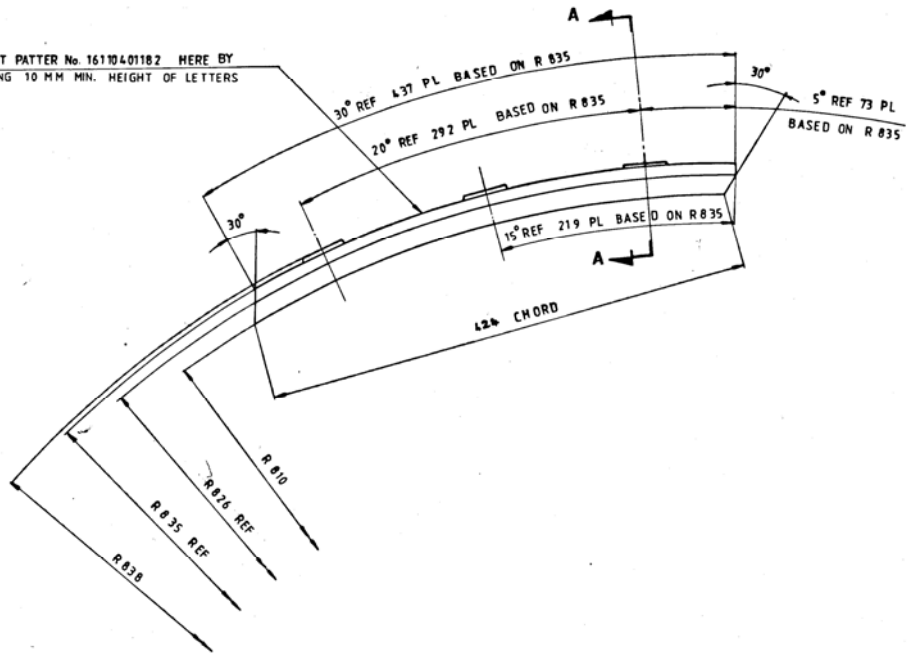

THE INFORMATION ON THIS DOCUMENT IS THE PROPERTY OF BHARAT HEAVY ELECTRICALS LIMITED. IT MUST NOT BE USED DIRECTLY OR INDIRECTLY IN ANY WAY DETRIMENTAL TO THE INTEREST OF THE COMPANY.

REFER PLANT STANDARD HY 0230261 FOR UNSPECIFIED TOLERANCES

VAR. OD	REMARKS	ITEM NO.	DESCRIPTION	DRAWING NO.	MATL. CODE	MATL. SPCN.	UNIT WT.	QTY.
			CASTING		AA 19741		20.00	

CARD TYPE-3 / CARD TYPE-2 / CARD TYPE-1

ADDITIONAL INFORMATION

STATUS OF DRAWING

DISTRIBUTION OF PRINTS

TYPE OF PRODUCT OR NAME OF CUSTOMER/PROJECT: CHANDRAPUR 500 MW 1043 RP

BHARAT HEAVY ELECTRICALS LTD. HYDERABAD

	NAME	SIGN	DATE
DRN.	B M R		930329
CHD	N D S		31-1-93
APPD	YSBL RAO		25-5-93

REV	DATE	ALTERED / CHECKED	REV	DATE	ALTERED / CHECKED	REV	DATE	ALTERED / CHECKED
ZONE			ZONE			ZONE		

SHEET SIZE: A1 | GRADE OF TOL. DIM. | SCALE: NTS | WEIGHT (Kg): 20.00 | REF. TO ASSY. DRG.: D_110_00823/1 | ITEM NO. | NO OF ITEMS

CODE: 446

TITLE: JOF LINER

CARD CODE

DRAWING NO. 1_61_304_01182 REV. 00

SHEET NO. 01 NO. OF SHEETS 01

TD-149, REV. NO. 2

SIZE A1

INVENTORY NO. | SIGN & DATE | REF. DRG. NO.

FIRST ANGLE PROJECTION (ALL DIMENSIONS IN MILLIMETRES)

2-61-000-00409

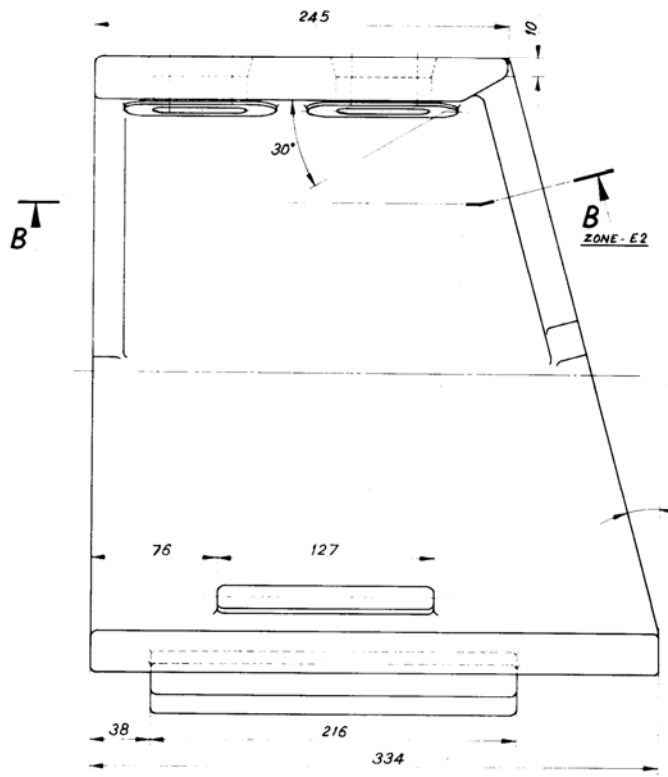

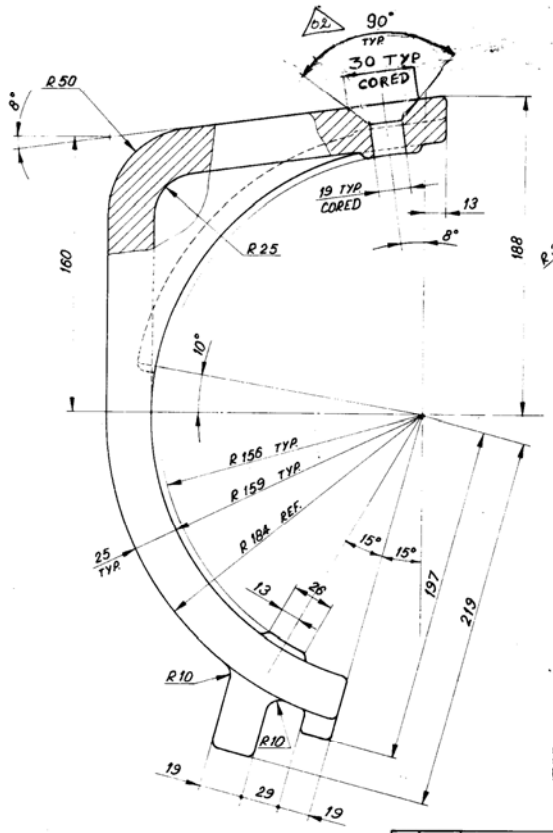

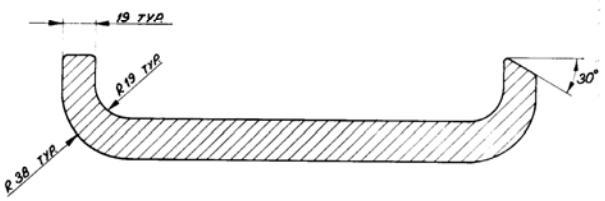

SECTION - BB

ZONE - E6

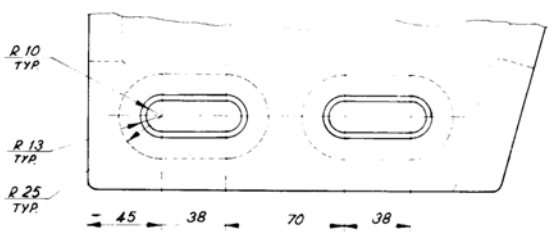

NOTES :-

GENERAL TOLERANCES, LIMITS, FITS & TOLERANCES AS PER PS. NO. [illegible]

1. UNLESS OTHERWISE NOTED,
   (A) ALL INSIDE CORNER FILLETS TO BE R 6.
   (B) ALL OUTSIDE CORNER RADII TO BE R 3.
2. CORED HOLES ARE TO BE CLEANED AND FREE FROM FINS, SAND ETC
3. DIMENSIONS & LOCATIONS OF THE CAST CORED HOLES ARE TO BE ENSURED WITH A TEMPLATE

DRAWING NO.	ITEM NO.	DESCRIPTION	NOS.	DRAWING NO.	ITEM NO.	MATL. CODE	NOS.	REMARKS
		ALLOY CASTING				BA9114133407 / AA19741	34.00	

TYPE OF PRODUCT OR NAME OF CUSTOMER PROJECT: 1003 XRP BOWL MILL

Bharat Heavy Electricals Ltd., BOILER PLANT UNIT, TIRUCHIRAPALLI-620 014

DRN: S. SELVARAJU 13.3.84 — CHD: P. SHANMUGAM 15.3.84 — APPD: [illegible]

02	DATE 26.10.96	ALTD [illegible] CHD [illegible]		DATE 11-1-93	ALTERED / CHECKED NDS / APPD [illegible]	DRAT FULY. ENGG CODE 363	GRADE OF MATL. DIM.	N.T.S	34.00	C. 101-00966/01 2-61-000-00472	01
		CORED HOLE TAPER ANGLE WAS 30° DIMN 30 WAS 25	B-1 C-3		AA19741 WAS COMBALLOY. NOTES 2 & 3 ADDED.						

APPD: [illegible]

TITLE: JOURNAL HEAD LINER — DRAWING NO. 2-61-000-00409 — REV. 02

FIRST ANGLE PROJECTION

(ALL DIMENSIONS ARE IN mm)

DRG.NO. 2-61-000-00747

THE INFORMATION ON THIS DOCUMENT IS THE PROPERTY OF BHARAT HEAVY ELECTRICALS LIMITED.
IT MUST NOT BE USED DIRECTLY OR INDIRECTLY IN ANY WAY DETRIMENTAL TO THE INTEREST OF THE COMPANY.

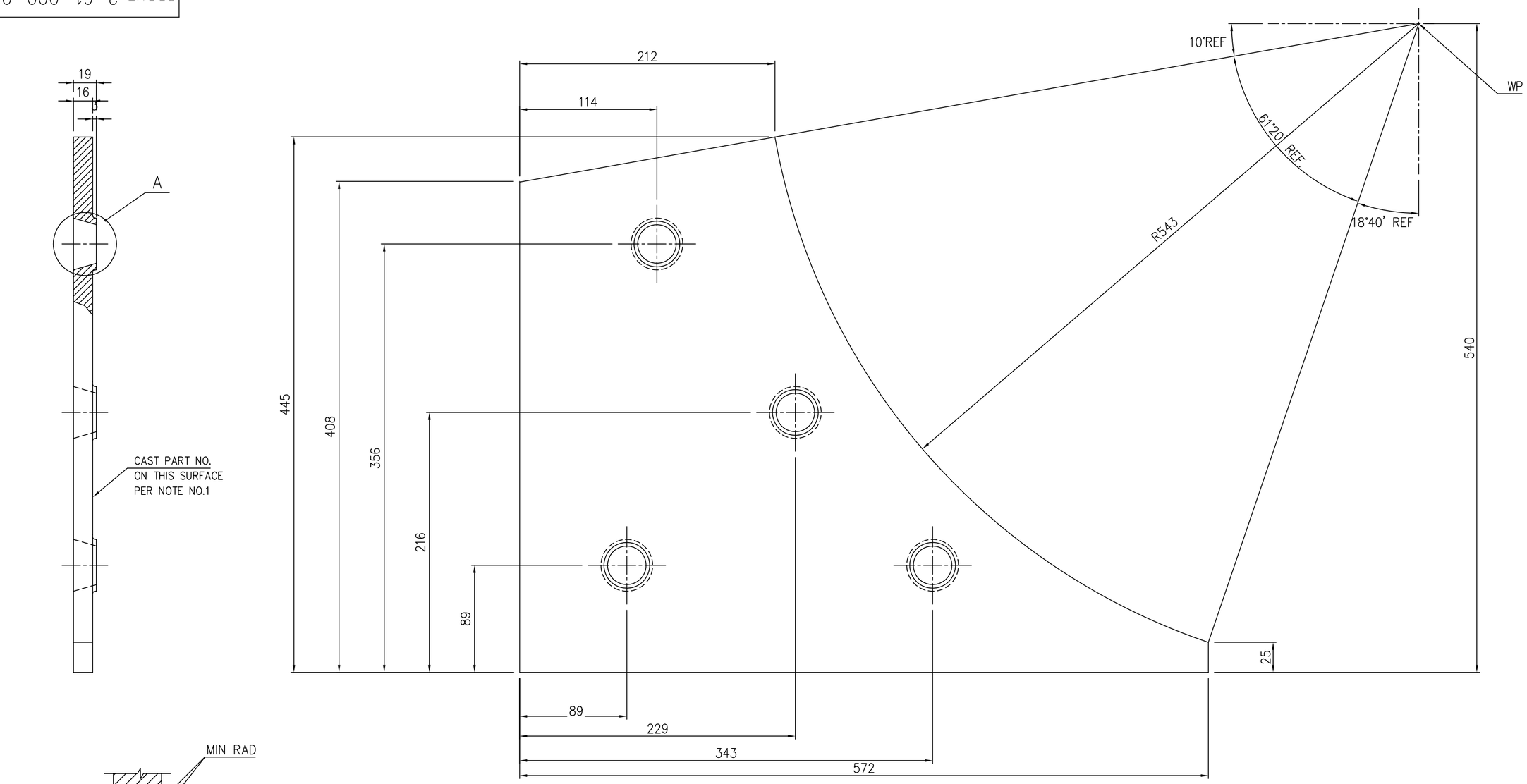

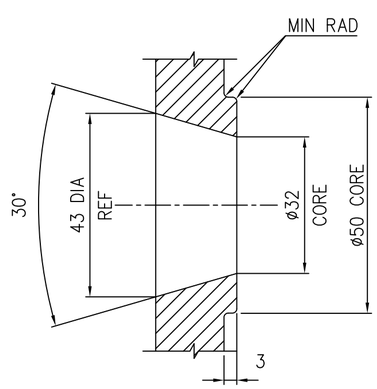

DETAIL – A

(TYP – 4 PLACES)

NOTES:

1. FOLLOWING INFO TO BE CAST INTO PART USING 10 MIN. LETTER SIZE. "2-61-000-00747".
2. CORED HOLES ARE TO BE CLEANED AND FREE FROM FINS, SAND ETC
3. DIMENSIONS AND LOCATIONS OF CORED HOLES ARE TO BE ENSURED WITH A TEMPLATE.

ITEM NO	DESCRIPTION	DRAWING NO.	VAR. NO.	RAW MATERIAL SIZE OR CASTING DRG.NO. OR FORGING DRG.NO.	MATERIAL CODE / MATERIAL SPECN.	NET WT.	GROSS WT. / QUANTITY

THE FOLLOWING CONDITIONS APPLY EXCEPT OTHERWISE STATED...

1. REF.TO HY0230261 FOR UNSPECIFIED TOLERANCES.
2. CHAMFER M/CD SHARP EDGES 1.2 TO 1.0 AT 45°.
3. INTERNAL M/CD CORNER RADII 1 TO 0.7.
4. THE SURFACE ROUGHNESS WHEREVER NOT SHOWN SHALL BE TAKEN FROM THE SURFACE ROUGHNESS SHOWN OUT SIDE BACK SLASHES GIVEN AT THE TOP MOST RIGHT CORNER OF THE DRG.

TYPE OF PRODUCT OR NAME OF CUSTOMER/PROJECT: 1003 XRP BOWL MILL

BHARAT HEAVY ELECTRICALS LTD. HYDERABAD

	NAME	SIGN.	DATE	NO.OF VAR.
DRN.	N.D.S		15.4.99.	NA
CHD.	S.G		15.4.99	
APPD.	K.M.RAO		15.4.99	

DEPT.	SCALE	WEIGHT(Kg)	REF. TO ASSY DRG.	ITEM NO.	NO.OF ITEMS
PULV ENGG / CODE 446	NTS	20.00	NA	NA	NA

TITLE: JOURNAL HEAD LINER

DRAWING NO. 2-61-000-00747 REV. 04

SHEET NO. / NO OF SHEETS

REV.	DATE	ALTERED / CHECKED	APPD.	ZONE
04	18.8.02	BOSS DIM ø50 WAS ø38		
03	15.4.99	DRAWING REDRAWN INCORPORATING ALL PREVIOUS REVISIONS.		

COMP. FILE NAME: 26100747.DWG

REF.DRG.NO.

INVENTORY NO.

TD-150/REV.NO.03 SIZE A2

FIRST ANGLE PROJECTION

(ALL DIMENSIONS ARE IN mm)

DRG.NO.2-61-000-00748

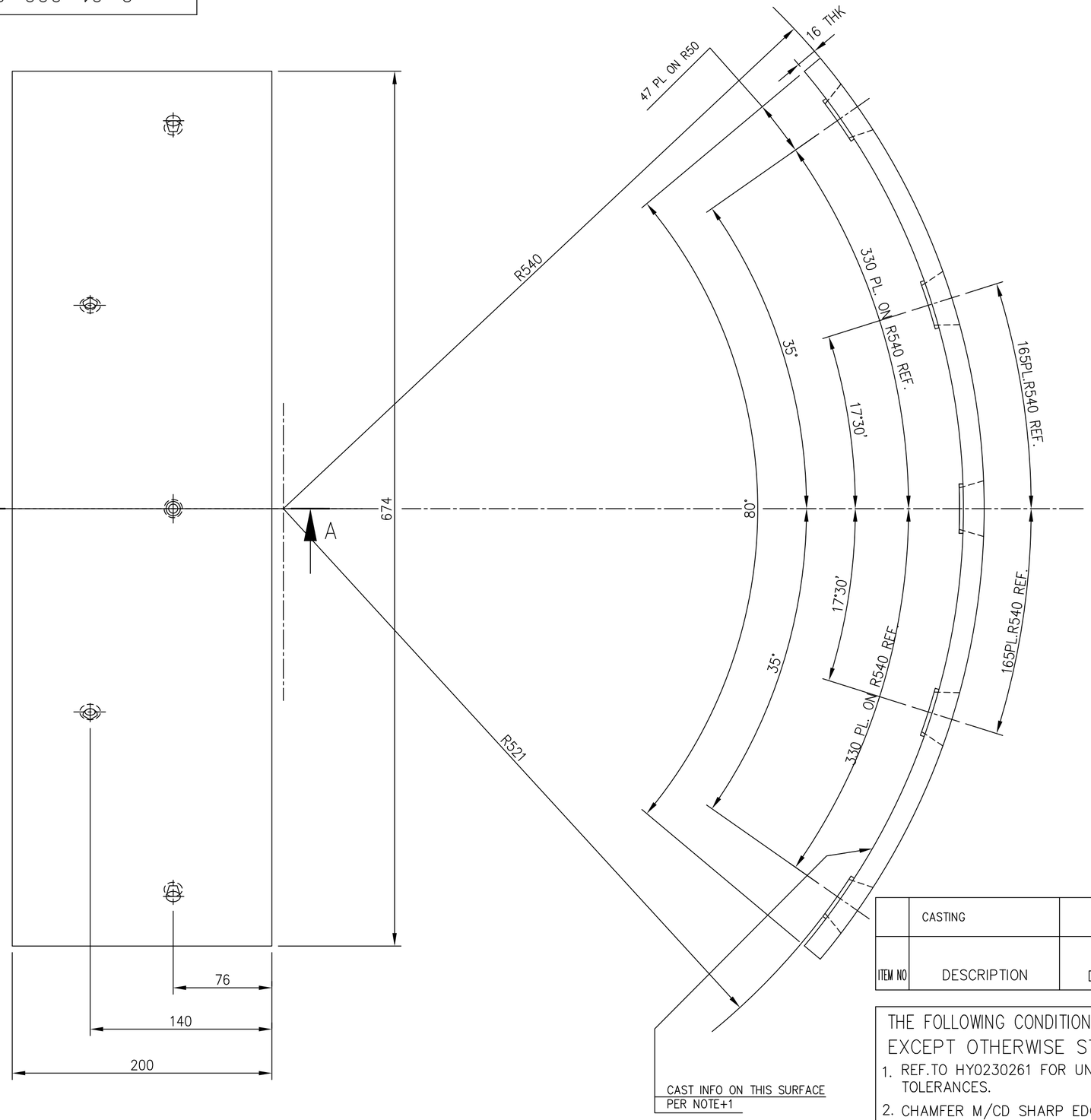

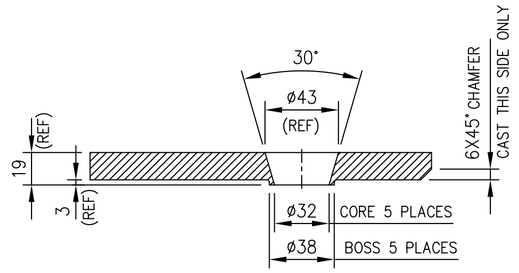

SECTION A–A

NOTES:

1. FOLLOWING INFO TO BE CAST INTO PART USING 10 MIN. LETTER SIZE. "2-61-000-00748".
2. CORED HOLES ARE TO BE CLEANED AND FREE FROM FINS, SAND ETC
3. DIMENSIONS AND LOCATIONS OF THE CORED HOLES ARE TO BE ENSURED WITH A TEMPLATE.

ITEM NO	DESCRIPTION	DRAWING NO.	VAR. NO.	RAW MATERIAL SIZE OR CASTING DRG.NO. OR FORGING DRG.NO.	MATERIAL CODE	NET WT. GROSS WT.
	CASTING				BA9114134217	18.620
					AA19741	
					MATERIAL SPECN.	QUANTITY

THE FOLLOWING CONDITIONS APPLY EXCEPT OTHERWISE STATED...

1. REF.TO HY0230261 FOR UNSPECIFIED TOLERANCES.
2. CHAMFER M/CD SHARP EDGES 1.2 TO 1.0 AT 45°.
3. INTERNAL M/CD CORNER RADII 1 TO 0.7.
4. THE SURFACE ROUGHNESS WHEREVER NOT SHOWN SHALL BE TAKEN FROM THE SURFACE ROUGHNESS SHOWN OUT SIDE BACK SLASHES GIVEN AT THE TOP MOST RIGHT CORNER OF THE DRG.

TYPE OF PRODUCT OR NAME OF CUSTOMER/PROJECT: 1003 XRP BOWL MILL

BHARAT HEAVY ELECTRICALS LTD. HYDERABAD

	NAME	SIGN.	DATE	NO.OF VAR.
DRN.	N.D.S		15.4.99	
CHD.	S.G		15.4.99	
APPD.	K.M.RAO		15.4.99	

DEPT. PULV. ENGG.	SCALE	WEIGHT(Kg)	REF. TO ASSY DRG.	ITEM NO.	NO.OF ITEMS
CODE 446	1:2.5	18.62	C-101-01445/0 CE PART NO 101-01445		

TITLE: JOURNAL HEAD LINER

DRAWING NO. 2-61-000-00748 REV. 03

SHEET NO. 1 NO OF SHEETS 1

REV.	DATE	ALTERED	CHECKED	APPD.	ZONE
03	3/3/99	DRG REDRAWN			
02	19/1/93	C.E. MATERIAL SPECIFICATION DELETED, NOTES 2 & 3 ADDED.	CHECKED NDS	APPD.JGK	C-2
01	3/7/87	THE CORED WELD PLUG HOLE CHANGED TO SUIT 1" PLUG.	CHECKED NDS	APPD. JGK	E2

ALTERED T. ASHIRVADAM

COMP. FILE NAME 26100748.DWG
THE INFORMATION ON THIS DOCUMENT IS THE PROPERTY OF BHARAT HEAVY ELECTRICALS LIMITED. IT MUST NOT BE USED DIRECTLY OR INDIRECTLY IN ANY WAY DETRIMENTAL TO THE INTEREST OF THE COMPANY.
REF.DRG.NO.
INVENTORY NO.

TD-150/REV.NO.03 SIZE A2

FIRST ANGLE PROJECTION

(ALL DIMENSIONS ARE IN mm)

DRG.NO. 2-61-000-00749

THIS THE PROPERTY OF BHARAT HEAVY ELECTRICALS LIMITED.
THE INFORMATION ON THIS DOCUMENT IS THE
IT MUST NOT BE USED DIRECTLY OR INDIRECTLY IN ANY WAY DETRIMENTAL TO THE INTEREST OF THE COMPANY.

COMP. FILE NAME 26100749.DWG

REF.DRG.NO.

INVENTORY NO.

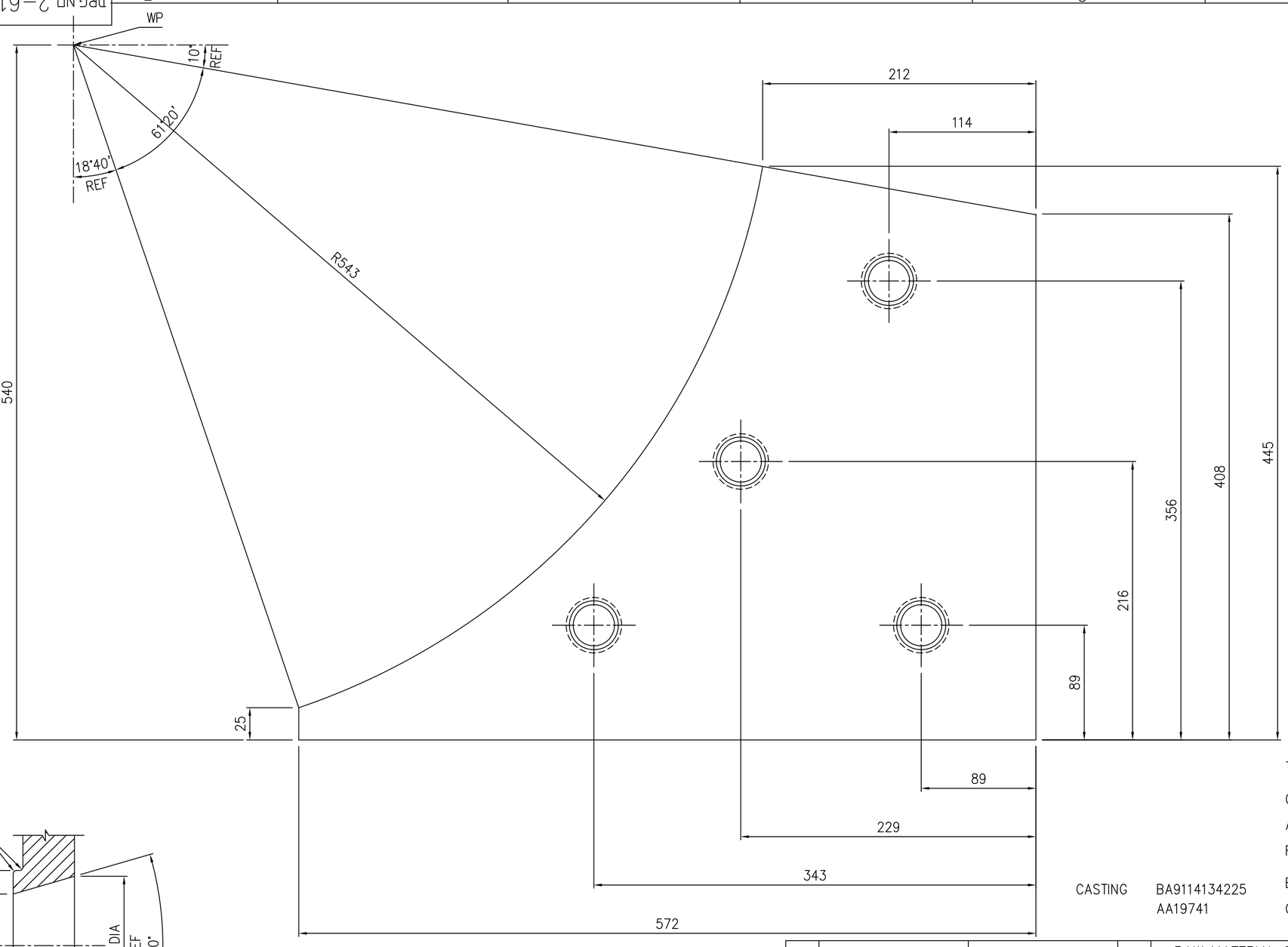

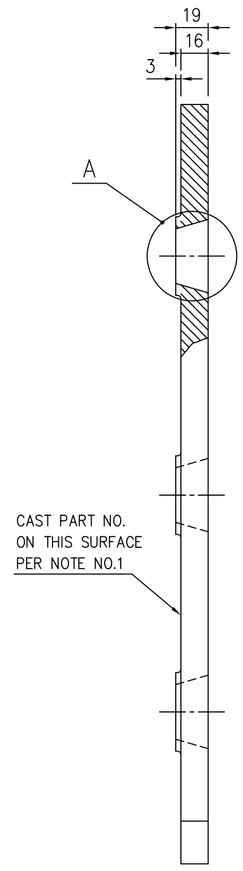

TOLERANCES UNLESS OTHERWISE NOTED.

CASTING ±1.6

ANGULAR ± 1/10°

FRACTIONAL ± 0.7

BREAK ALL SHARP EDGES AND CORNERS UNLESS OTHERWISE NOTED.

CASTING BA9114134225
AA19741

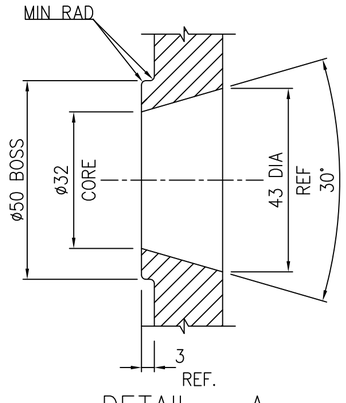

DETAIL – A

(TYP – 4 PLACES)

NOTES :–

1. FOLLOWING INFO TO BE CAST INTO PART USING 10 MIN. LETTER HEIGHT "2-61-000-00749."
2. CORED HOLES ARE TO BE CLEANED AND FREE FROM FINS, SAND ETC.
3. DIMENSIONS AND LOCATIONS OF THE CORED HOLES ARE TO BE ENSURED WITH A TEMPLATE.

ITEM NO	DESCRIPTION	DRAWING NO.	VAR. NO.	RAW MATERIAL SIZE OR CASTING DRG.NO. OR FORGING DRG.NO.	MATERIAL CODE / MATERIAL SPECN.	NET WT.	GROSS WT. / QUANTITY

THE FOLLOWING CONDITIONS APPLY EXCEPT OTHERWISE STATED...

1. REF.TO HY0230261 FOR UNSPECIFIED TOLERANCES.
2. CHAMFER M/CD SHARP EDGES 1.2 TO 1.0 AT 45°.
3. INTERNAL M/CD CORNER RADII 1 TO 0.7.
4. THE SURFACE ROUGHNESS WHEREVER NOT SHOWN SHALL BE TAKEN FROM THE SURFACE ROUGHNESS SHOWN OUT SIDE BACK SLASHES GIVEN AT THE TOP MOST RIGHT CORNER OF THE DRG.

TYPE OF PRODUCT OR NAME OF CUSTOMER/PROJECT: 1003 X RP BOWL MILL

BHARAT HEAVY ELECTRICALS LTD. HYDERABAD

	NAME	SIGN.	DATE
DRN.	N.D.S		24.12.86
CHD.	S.G		24.12.86
APPD.	K.M.R		24.12.86

NO.OF VAR.

DEPT.	CODE	SCALE	WEIGHT(Kg)	REF. TO ASSY DRG.	ITEM NO.	NO.OF ITEMS
PULV.ENGG	446	1:2.5	20.00	C-101-01443/0 CE PART NO.101-01443		

TITLE: JOURNAL HEAD LINER

DRAWING NO. 2-61-000-00749 REV. 04

SHEET NO. 1 NO OF SHEETS 1

REV.	DATE	ALTERED	CHECKED	APPD.	ZONE	
04	18.8.02					BOSS DIM. ø50 WAS ø38.
03	–					DRAWING REDRAWN
02	18.1.93					C.E.MATERIAL SPECIFICATION DELETED, NOTES 2 & 3 ADDED.
01	3.7.87	T.A.V.M.				THE CORED WELD PLUG HOLE CHANGED TO SUIT 1" PLUG.

TD-150/REV.NO.03 SIZE A2

FIRST ANGLE PROJECTION

(ALL DIMENSIONS ARE IN mm)

DRG. NO. 2-61-004-02258

SH. 01 OF 01

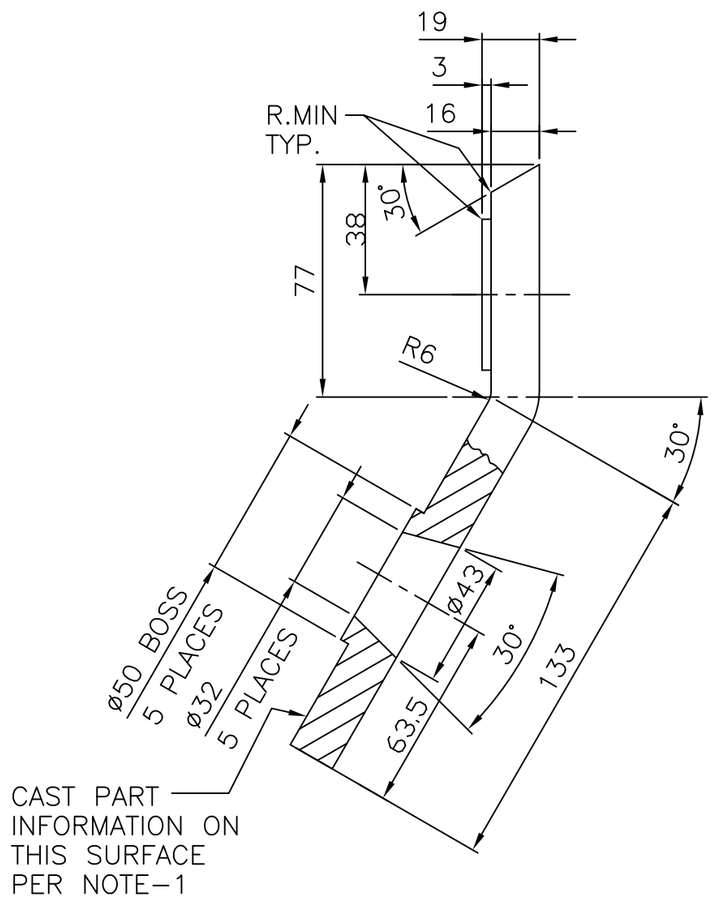

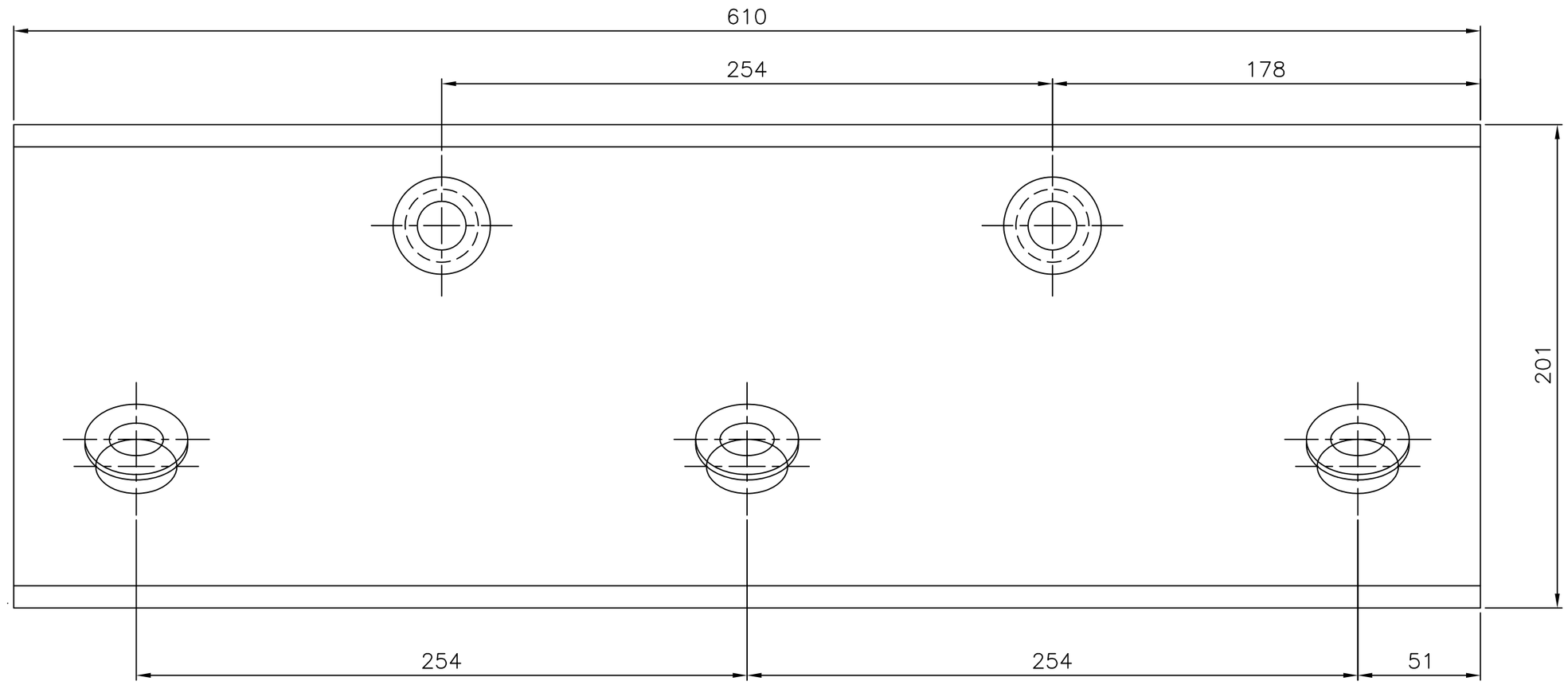

NOTES:-

01. FOLLOWING INFORMATION TO BE CAST INTO PART USING 3mm MAX. HEIGHT LETTERS. 26100402258

02. TOLERANCES UNLESS OTHERWISE NOTED.
CASTING ±1.6
ANGULAR ±0.1°

ITEM NO.	DESCRIPTION	DRAWING NO.	VAR. NO.	RAW MATERIAL SIZE OR CASTING DRG. NO. OR FORGING DRG. NO.	MATERIAL CODE	NET WT.	GROSS WT.
					MATERIAL SPECN.	QUANTITY	
01	CASTING				BA9114135485	16.200	
					AA19741	1	

THE FOLLOWING CONDITIONS APPLY EXCEPT OTHERWISE STATED.

1. REF. TO HY0230261 FOR UNSPECIFIED TOLERANCES.
2. CHAMFER M/CD. SHARP EDGES 1.2 TO 1.0 AT 45°.
3. INTERNAL M/CD. CORNER RADII 1 TO 0.7
4. THE SURFACE ROUGHNESS WHERE-EVER NOT SHOWN SHALL BE TAKEN FROM THE SURFACE ROUGHNESS SHOWN OUT SIDE THE BACK SLASH GIVEN ON THE TOP MOST RIGHT CORNER OF THE DRG.

TYPE OF PRODUCT
NAME OF CUSTOMER/PROJECT: 1103 XRP BOWL MILL

BHARAT HEAVY ELECTRICALS LIMITED
HYDERABAD

	NAME	SIGN.	DATE	NO.OF VAR.
DRN.	UNIC			/
CHD.	E.M.ASHOK			
APPD.	K.M.RAO			

DEPT.	UNTOL. DIMS. GR.		SCALE	WEIGHT (KG)	REF. TO ASSY DRG.	ITEM NO.	NO.OF ITEMS
PULV ENGG. CODE 446	¢/M/F		1:2	16.200	1-61-004-01189	05	07

TITLE: JOURNAL HEAD LINER

CARD CODE

DRAWING NO. 2-61-004-02258 REV. 01

SHEET NO. 01 NO OF SHEETS 01

REV.	DATE	ALTERED	APPD.	REV.	DATE	ALTERED	APPD.	REV.	DATE	ALTERED	APPD.
		CHD.				CHD.		01	22.05.99	CHD.	
ZONE				ZONE				ZONE		DRAWING REDRAWN ON ACAD.	

THE INFORMATION ON THIS DOCUMENT IS THE PROPERTY OF BHARAT HEAVY ELECTRICALS LIMITED. IT MUST NOT BE USED DIRECTLY OR INDIRECTLY IN ANY WAY DETRIMENTAL TO THE INTEREST OF THE COMPANY

COMPUTER FILE NAME 26102258.DWG

REF. DRG. NO. 1-61-004-01189

GENERAL DIMENSIONAL LIMITS,FITS & TOLERANCES AS PER HY0230261

SIGN. AND DATE

INVENTORY NO

FIRST ANGLE PROJECTION

(ALL DIMENSIONS ARE IN mm)

DRG. NO.2-61-004-02259 SH. 01 OF 01

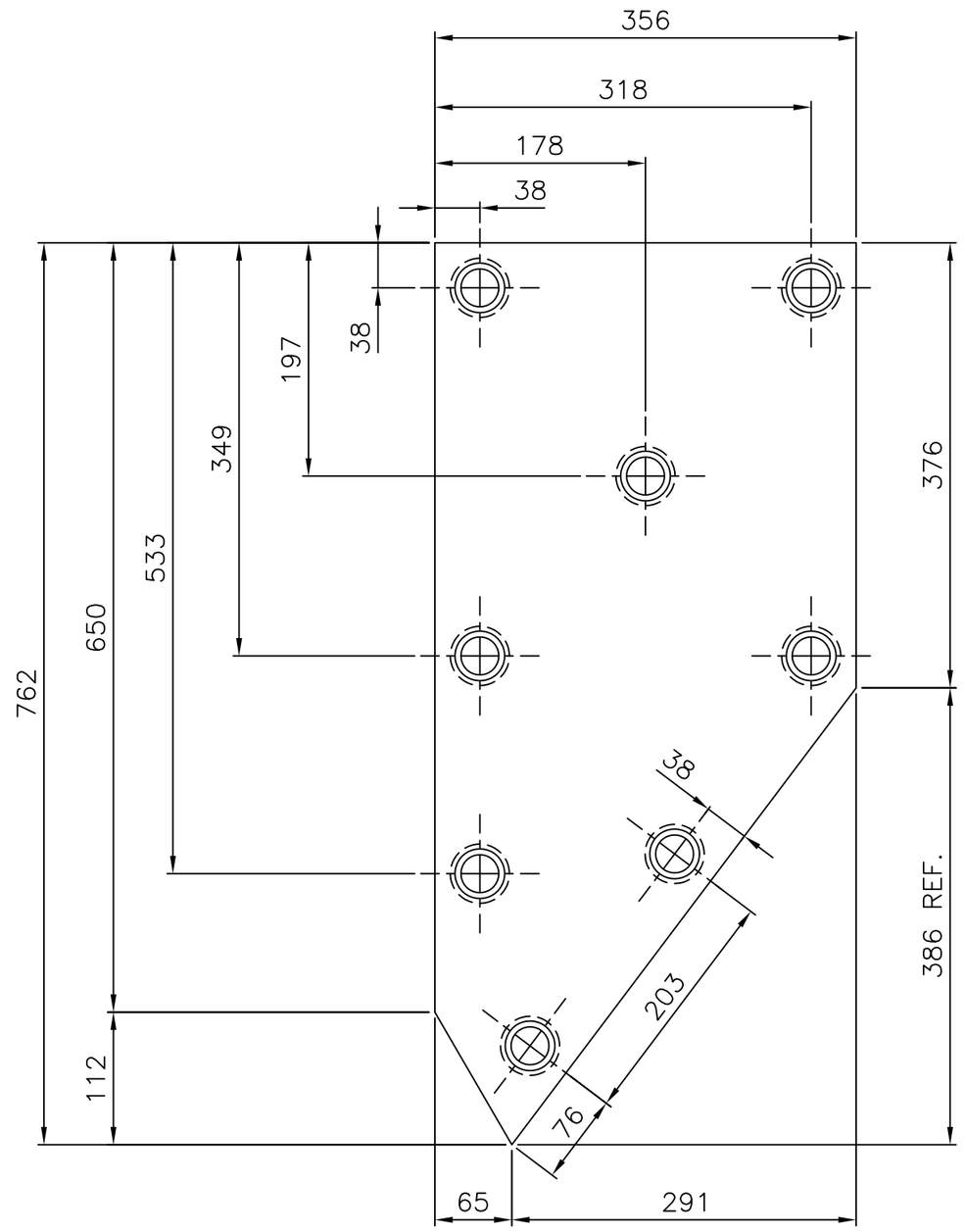

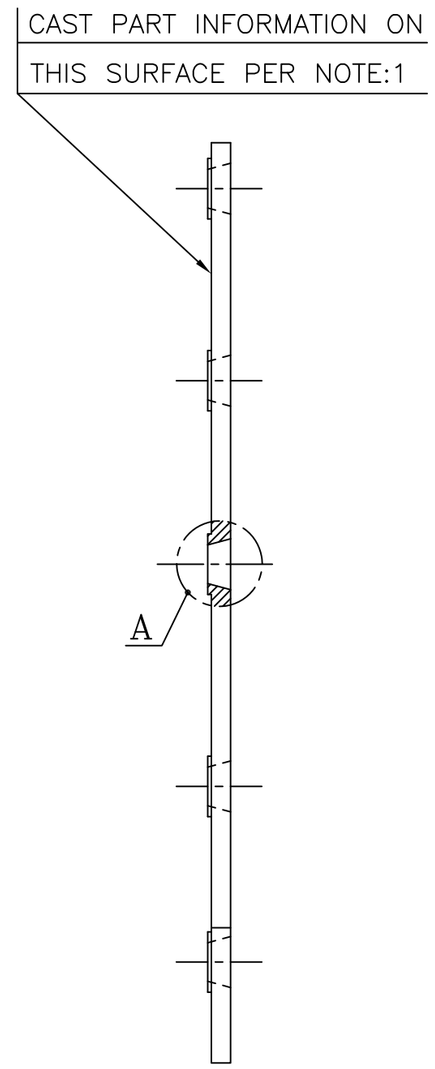

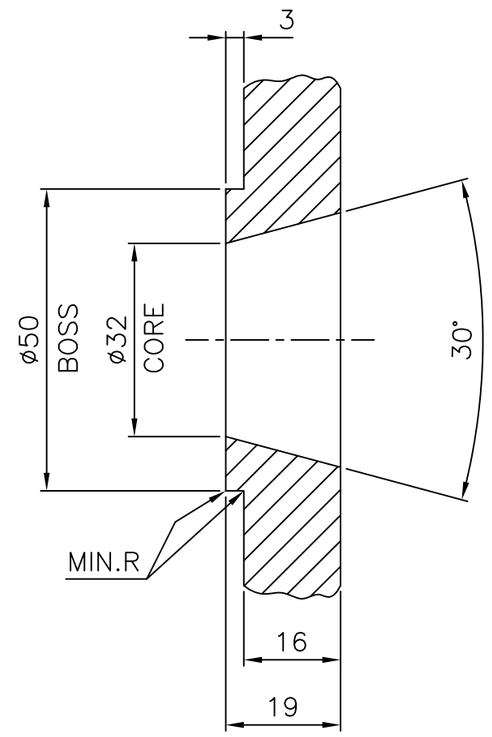

DETAIL-A

NOTES:-

1. FOLLOWING INFORMATION TO BE CAST INTO PART USING 3MM. MAX. HEIGHT LETTERS 26100402259.
2. BREAK ALL SHARP EDGES AND CORNERS UNLESS OTHERWISE NOTED.
3. TOLERANCES UNLESS OTHERWISE NOTED:
   CASTING ±1.6
   ANGULAR ±0.1°

ITEM NO.	DESCRIPTION	DRAWING NO.	VAR. NO.	RAW MATERIAL SIZE OR CASTING DRG. NO. OR FORGING DRG. NO.	MATERIAL CODE / MATERIAL SPECN.	NET WT. / QUANTITY	GROSS WT.
01	CASTING				BA9114135493		26.700
					AA19741	1	

THE FOLLOWING CONDITIONS APPLY EXCEPT OTHERWISE STATED.

1. REF. TO HY0230261 FOR UNSPECIFIED TOLERANCES.
2. CHAMFER M/CD. SHARP EDGES 1.2 TO 1.0 AT 45°.
3. INTERNAL M/CD. CORNER RADII 1 TO 0.7
4. THE SURFACE ROUGHNESS WHERE-EVER NOT SHOWN SHALL BE TAKEN FROM THE SURFACE ROUGHNESS SHOWN OUT SIDE THE BACK SLASH GIVEN ON THE TOP MOST RIGHT CORNER OF THE DRG.

TYPE OF PRODUCT
NAME OF CUSTOMER/PROJECT: 1103 XRP BOWL MILL

BHARAT HEAVY ELECTRICALS LIMITED
HYDERABAD

	NAME	SIGN.	DATE	NO.OF VAR.
DRN.	UNIC		21.05.99	–
CHD.	E.M.ASHOK		21.05.99	
APPD.	K.M.RAO		21.05.99	

DEPT. PULV ENGG. CODE 446	UNTOL. DIMS. GR. ¢/M/f	SCALE 1:1,1:5	WEIGHT (KG) 26.700	REF. TO ASSY DRG. 1-61-004-01189	ITEM NO. 06	NO.OF ITEMS 07

TITLE: JOURNAL HEAD LINER

CARD CODE

DRAWING NO. 2-61-004-02259 REV. 01

SHEET NO. 01 NO OF SHEETS 01

REV.	DATE	ALTD.	APPD.	CHD.	ZONE
01	22.05.99				

DRAWING REDRAWN ON ACAD.

THE INFORMATION ON THIS DOCUMENT IS THE PROPERTY OF BHARAT HEAVY ELECTRICALS LIMITED. IT MUST NOT BE USED DIRECTLY OR INDIRECTLY IN ANY WAY DETRIMENTAL TO THE INTEREST OF THE COMPANY

GENERAL DIMENSIONAL LIMITS,FITS & TOLERANCES AS PER HY0230261

COMPUTER FILE NAME 26102259.DWG

REF. DRG. NO. 1-61-004-01189

SIGN. AND DATE

INVENTORY NO

L.W.C.

FIRST ANGLE PROJECTION

(ALL DIMENSIONS ARE IN mm)

DRG. NO. 2-61-004-02265

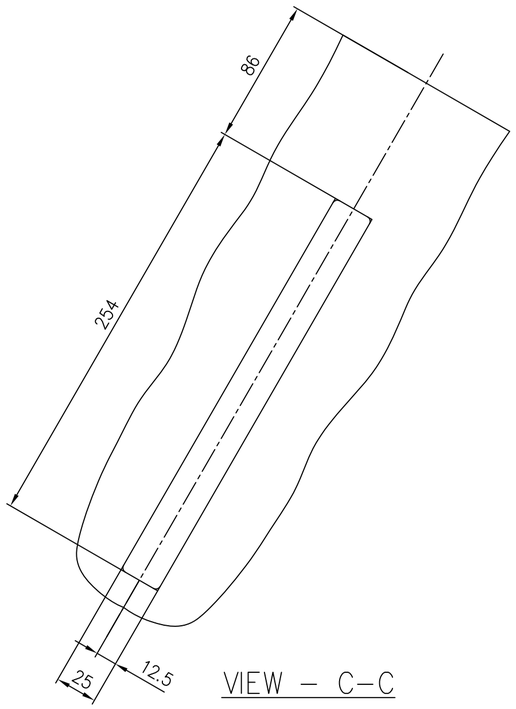

VIEW – C–C

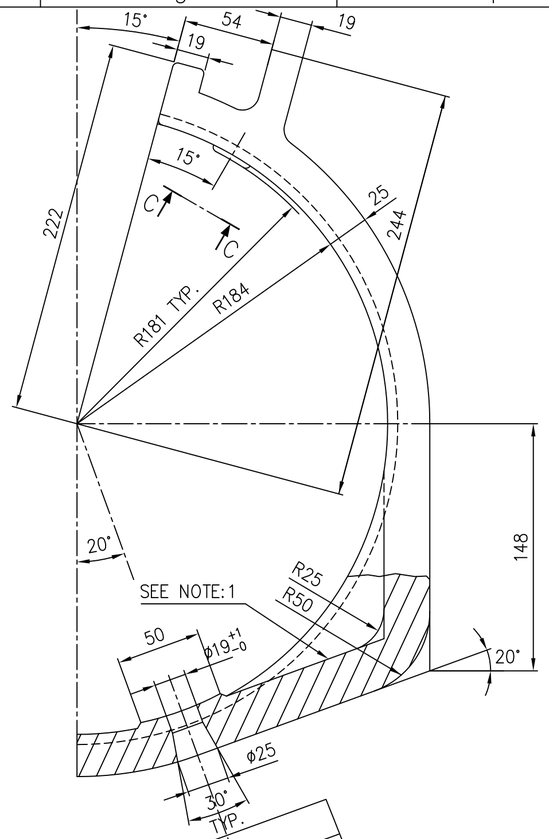

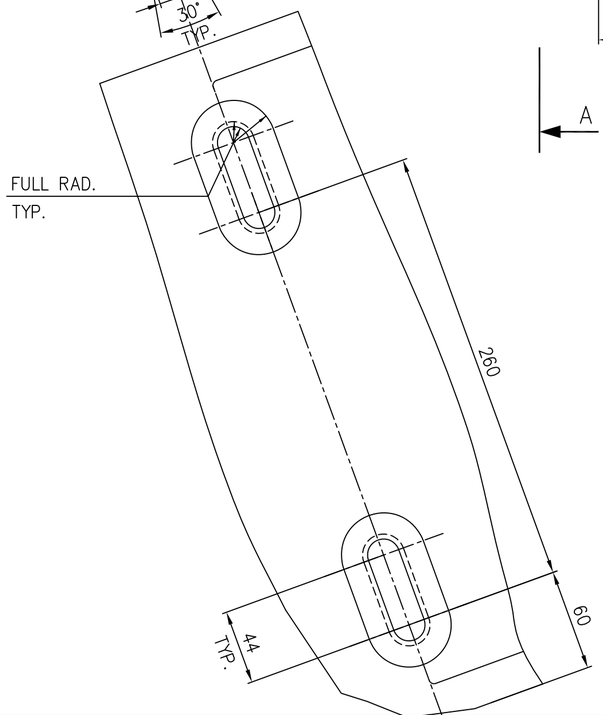

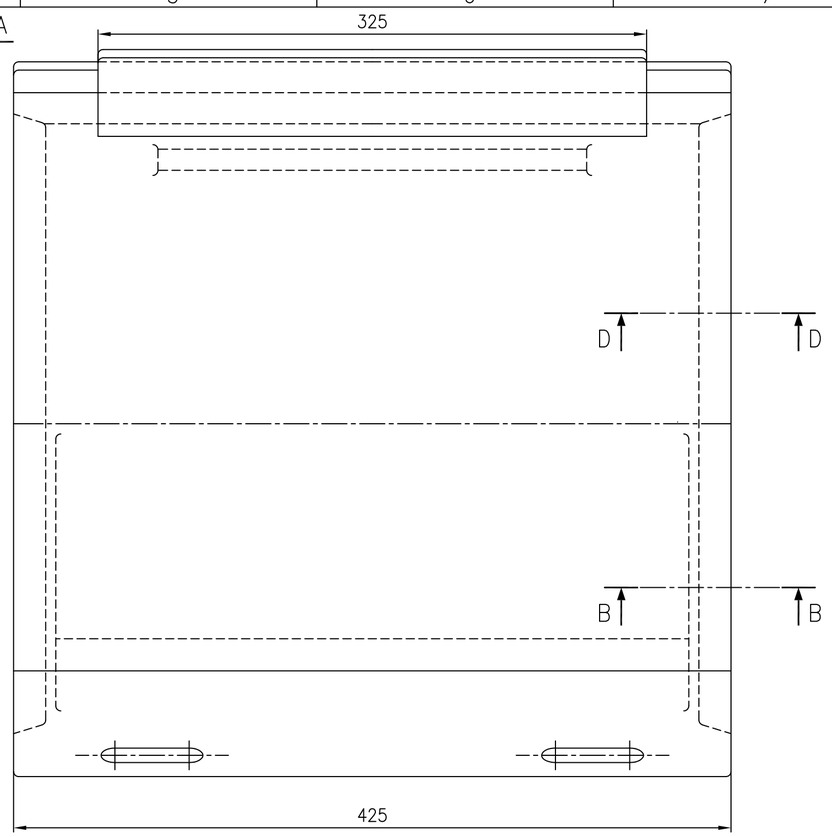

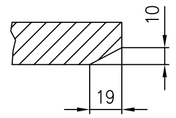

SECTION D–D

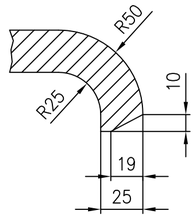

SECTION B–B

NOTES :–

1. CAST PART NO. & PATT NO. USING 3 mm HEIGHT CHARACTERS.
2. ALL FILLET RADII TO BE 3 mm UNLESS OTHERWISE SHOWN OR NOTED.
3. BREAK ALL SHARP EDGES AND CORNERS UNLESS OTHERWISE NOTED.
4. TOLERANCES UNLESS OTHERWISE NOTED.
   CASTING ±1.6
   ANGULAR ±0.1°

ITEM NO.	DESCRIPTION	DRAWING NO.	VAR. NO.	RAW MATERIAL SIZE OR CASTING DRG. NO. OR FORGING DRG. NO.	MATERIAL CODE	NET WT.	GROSS WT.
01	CASTING				BA9114135477	49.000	
					AA19741	1	
					MATERIAL SPECN.	QUANTITY	

THE FOLLOWING CONDITIONS APPLY EXCEPT OTHERWISE STATED.

1. REF. TO HY0230261 FOR UNSPECIFIED TOLERANCES.
2. CHAMFER M/CD. SHARP EDGES 1.2 TO 1.0 AT 45°.
3. INTERNAL M/CD. CORNER RADII 1 TO 0.7
4. THE SURFACE ROUGHNESS WHERE–EVER NOT SHOWN SHALL BE TAKEN FROM THE SURFACE ROUGHNESS SHOWN OUT SIDE THE BACK SLASH GIVEN OR THE TOP MOST RIGHT CORNER OF THE DRG.

TYPE OF PRODUCT: 1043 RP BOWL MILL

NAME OF CUSTOMER/PROJECT: CHANDRAPUR 500 MW

BHARAT HEAVY ELECTRICALS LIMITED
HYDERABAD

	NAME	SIGN.	DATE	NO.OF VAR.
DRN.	L.W.C.			
CHD.	E.M.A.		–	
APPD.	K.M.RAO.		–	

DEPT.	UNTOL. DIMS. CR.		SCALE	WEIGHT (KG)	REF. TO ASSY DRG.	ITEM NO.	NO.OF ITEMS
PULV ENGG. CODE 446	¢/M/¢		1:1	49.000	0-61-004-00571	26	32

TITLE: JOURNAL HEAD LINER

DRAWING NO. 2-61-004-02265 REV. 00

SHEET NO. 01 NO OF SHEETS 01

REV.	DATE	ALTERED	APPD.	REV.	DATE	ALTERED	APPD.	REV.	DATE	ALTERED	APPD.
		CHD.				CHD.		01	08.07.99	CHD.	
ZONE				ZONE				ZONE			

DRG. REDRAWN IN AUTOCAD.

THE INFORMATION ON THIS DOCUMENT IS THE PROPERTY OF BHARAT HEAVY ELECTRICALS LIMITED. IT MUST NOT BE USED DIRECTLY OR INDIRECTLY IN ANY WAY DETRIMENTAL TO THE INTEREST OF THE COMPANY

COMPUTER FILE NAME 26102265.DWG

REF. DRG. NO.

SIGN. AND DATE

INVENTORY NO

FIRST ANGLE PROJECTION

(ALL DIMENSIONS ARE IN mm)

DRG. NO.2-61-004-02267 | SH. 01 OF 01

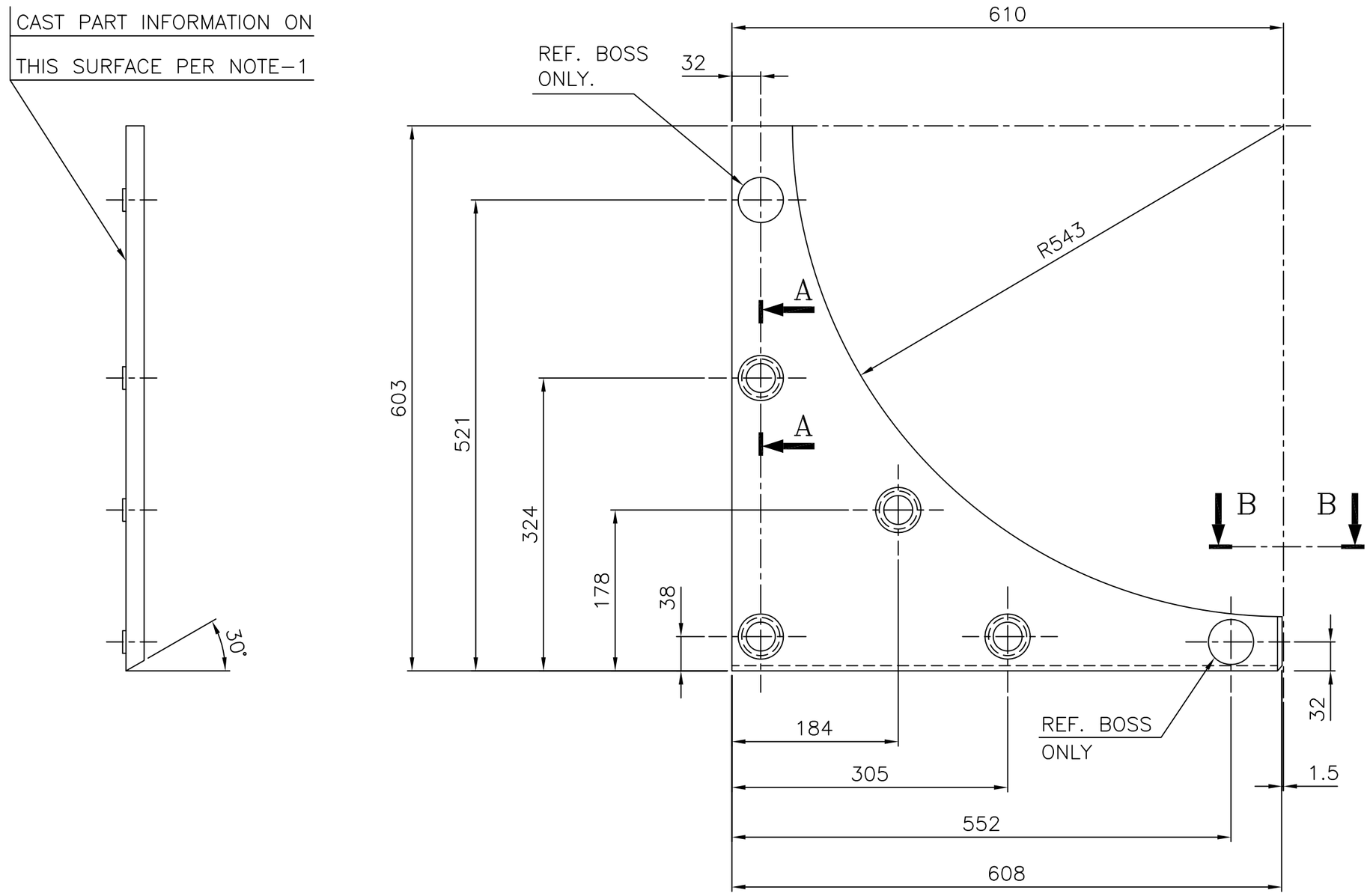

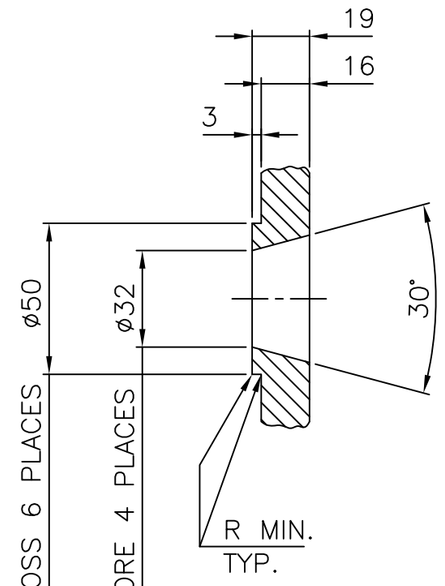

SECTION-AA

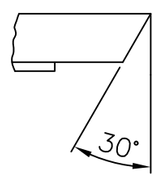

VIEW-BB

NOTES:-

1. FOLLOWING INFORMATION TO BE CAST INTO PART USING 3MM. MAX. HEIGHT LETTERS: 26100402267.
2. BREAK ALL SHARP EDGES AND CORNERS UNLESS OTHERWISE NOTED.
3. TOLERANCES UNLESS OTHERWISE NOTED:
   CASTING ±1.6
   ANGULAR ±0.1°

ITEM NO.	DESCRIPTION	DRAWING NO.	VAR. NO.	RAW MATERIAL SIZE OR CASTING DRG. NO. OR FORGING DRG. NO.	MATERIAL CODE	NET WT.	GROSS WT.
01	CASTING				BA9114135469		17.200
					AA19741	1	
					MATERIAL SPECN.	QUANTITY	

THE FOLLOWING CONDITIONS APPLY EXCEPT OTHERWISE STATED.

1. REF. TO HY0230261 FOR UNSPECIFIED TOLERANCES.
2. CHAMFER M/CD. SHARP EDGES 1.2 TO 1.0 AT 45°.
3. INTERNAL M/CD. CORNER RADII 1 TO 0.7
4. THE SURFACE ROUGHNESS WHERE-EVER NOT SHOWN SHALL BE TAKEN FROM THE SURFACE ROUGHNESS SHOWN OUT SIDE THE BACK SLASH GIVEN ON THE TOP MOST RIGHT CORNER OF THE DRG.

TYPE OF PRODUCT
NAME OF CUSTOMER/PROJECT — 1103 XRP BOWL MILL

BHARAT HEAVY ELECTRICALS LIMITED
HYDERABAD

	NAME	SIGN.	DATE	NO.OF VAR.
DRN.	UNIC		10.06.99	–
CHD.	N.D.S		10.06.99	
APPD.	K.M.RAO		10.06.99	

DEPT.	UNTOL. DIMS. GR.	SCALE	WEIGHT (KG)	REF. TO ASSY DRG.	ITEM NO.	NO.OF ITEMS
PULV ENGG. CODE 446	¢/M/F	1:5	17.200	1-61-004-01189	03	07

TITLE: JOURNAL HEAD LINER

CARD CODE

DRAWING NO. 2-61-004-02267 REV. 01

SHEET NO. 01 NO OF SHEETS 01

REV.	DATE	ALTD.	APPD.
		CHD.	
ZONE			

REV.	DATE	ALTD.	APPD.
		CHD.	
ZONE			

REV.	DATE	ALTD.	APPD.
01	10.06.99	CHD.	
ZONE	DRG. REDRAWN ON ACAD.		

THE INFORMATION ON THIS DOCUMENT IS THE PROPERTY OF BHARAT HEAVY ELECTRICALS LIMITED. IT MUST NOT BE USED DIRECTLY OR INDIRECTLY IN ANY WAY DETRIMENTAL TO THE INTEREST OF THE COMPANY

COMPUTER FILE NAME 26102267.DWG

REF. DRG. NO. 1-61-004-01189

GENERAL DIMENSIONAL LIMITS,FITS & TOLERANCES AS PER HY0230261

SIGN. AND DATE

INVENTORY NO

FIRST ANGLE PROJECTION

(ALL DIMENSIONS ARE IN mm)

DRG. NO.2-61-004-02268 | SH. 01 OF 01

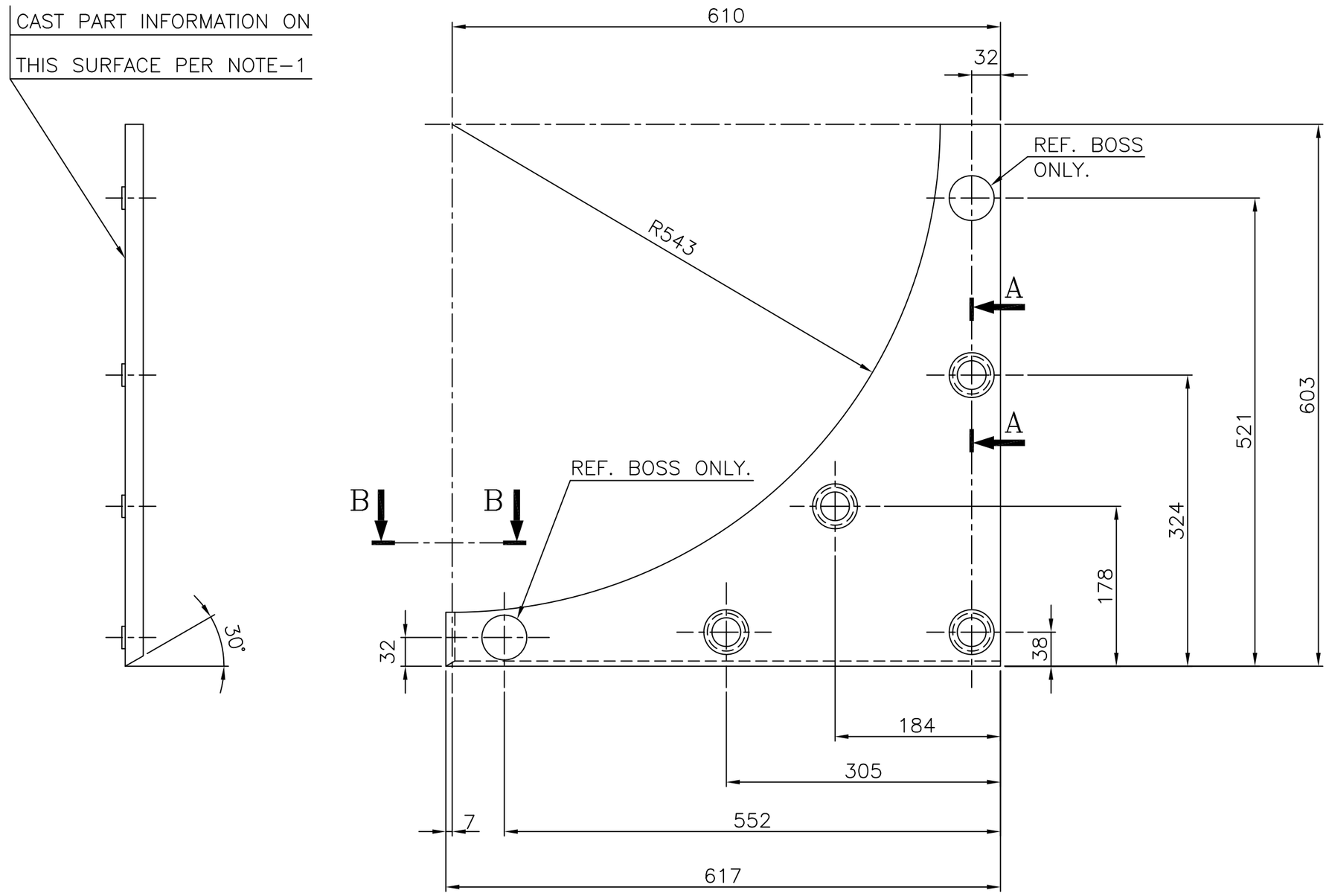

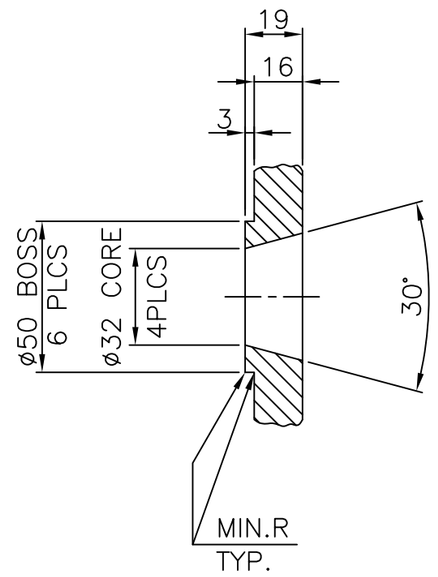

SECTION-AA

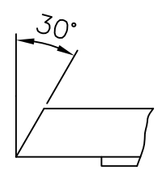

SECTION-BB

NOTES:-

1. FOLLOWING INFORMATION TO BE CAST INTO PART USING 3MM. MAX. LETTERS: 26100402268.
2. BREAK ALL SHARP EDGES AND CORNERS UNLESS OTHERWISE NOTED.
3. TOLERANCES UNLESS OTHERWISE NOTED:
   CASTING ±1.6
   ANGULAR ±0.1°

ITEM NO.	DESCRIPTION	DRAWING NO.	VAR. NO.	RAW MATERIAL SIZE OR CASTING DRG. NO. OR FORGING DRG. NO.	MATERIAL CODE / MATERIAL SPECN.	NET WT. / QUANTITY	GROSS WT.
01	CASTING				BA92114135507 / AA19741	1	17.200

THE FOLLOWING CONDITIONS APPLY EXCEPT OTHERWISE STATED.

1. REF. TO HY0230261 FOR UNSPECIFIED TOLERANCES.
2. CHAMFER M/CD. SHARP EDGES 1.2 TO 1.0 AT 45°.
3. INTERNAL M/CD. CORNER RADII 1 TO 0.7
4. THE SURFACE ROUGHNESS WHERE-EVER NOT SHOWN SHALL BE TAKEN FROM THE SURFACE ROUGHNESS SHOWN OUT SIDE THE BACK SLASH GIVEN ON THE TOP MOST RIGHT CORNER OF THE DRG.

TYPE OF PRODUCT
NAME OF CUSTOMER/PROJECT: 1103 XRP BOWL MILL

BHARAT HEAVY ELECTRICALS LIMITED
HYDERABAD

	NAME	SIGN.	DATE	NO.OF VAR.
DRN.	UNIC		10.06.99	–
CHD.	E.M.ASHOK		10.06.99	
APPD.	K.M.RAO		10.06.99	

DEPT.	UNTOL. DIMS. GR.		SCALE	WEIGHT (KG)	REF. TO ASSY DRG.	ITEM NO.	NO.OF ITEMS
PULV ENGG. CODE 446	¢/M/F		1:5	17.200	1-61-004-01189	02	07

TITLE: JOURNAL HEAD LINER

CARD CODE

DRAWING NO. 2-61-004-02268 REV. 01

SHEET NO. 01 NO OF SHEETS 01

REV.	DATE	ALTD.	APPD.	REV.	DATE	ALTD.	APPD.	REV.	DATE	ALTD.	APPD.
		CHD.				CHD.		01	10.06.99	CHD.	
ZONE				ZONE				ZONE			

DRG. REDRAWN ON ACAD.

THE INFORMATION ON THIS DOCUMENT IS THE PROPERTY OF BHARAT HEAVY ELECTRICALS LIMITED. IT MUST NOT BE USED DIRECTLY OR INDIRECTLY IN ANY WAY DETRIMENTAL TO THE INTEREST OF THE COMPANY

GENERAL DIMENSIONAL LIMITS,FITS & TOLERANCES AS PER HY0230261

COMPUTER FILE NAME 26102268.DWG

REF. DRG. NO. 1-61-004-01189

SIGN. AND DATE

INVENTORY NO

FIRST ANGLE PROJECTION

(ALL DIMENSIONS ARE IN mm)

POORNIMA

DRG.NO. 2-61-080-00420

THE INFORMATION ON THIS DOCUMENT IS THE PROPERTY OF BHARAT HEAVY ELECTRICALS LIMITED.
IT MUST NOT BE USED DIRECTLY OR INDIRECTLY IN ANY WAY DETRIMENTAL TO THE INTEREST OF THE COMPANY.

COMP. FILE NAME: 26100420.DWG

REF.DRG.NO.

INVENTORY NO.

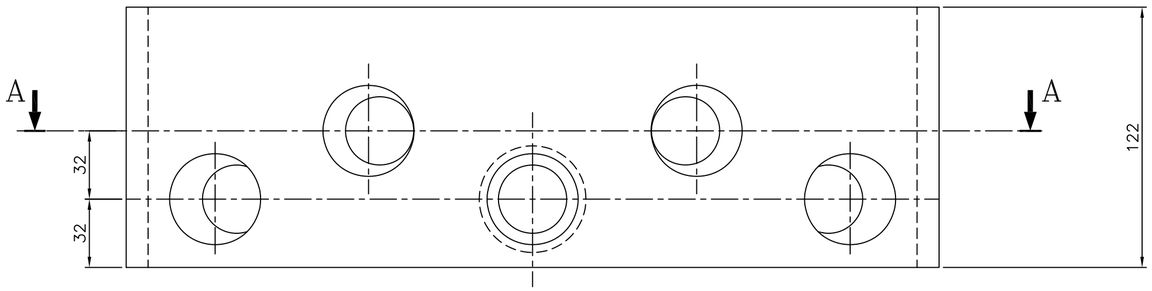

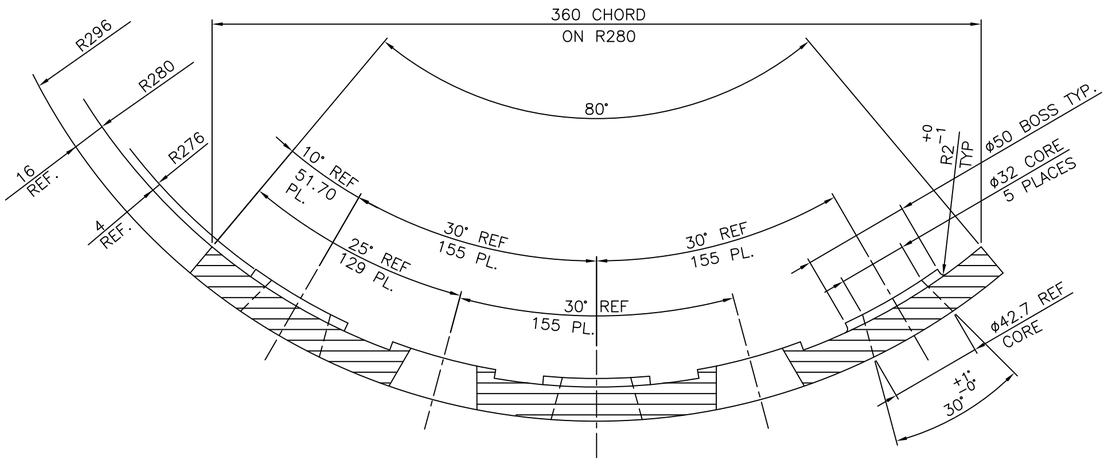

SECTION A-A

NOTE:

1. ALL PERIPHERAL LENGTHS ARE BASED ON R296
2. BREAK ALL SHARP EDGES AND CORNERS.
3. TOLERANCE, UNLESS OTHERWISE SPECIFIED.
   CASTING: ±1.5
   ANGULAR: ±0°6'

ITEM NO	DESCRIPTION	DRAWING NO.	VAR. NO.	RAW MATERIAL SIZE OR CASTING DRG.NO. OR FORGING DRG.NO.	MATERIAL CODE	NET WT.	GROSS WT.
	CASTING				BA9114133750	5.20	
					AA19741		
					MATERIAL SPECN.	QUANTITY	

THE FOLLOWING CONDITIONS APPLY EXCEPT OTHERWISE STATED...

1. REF.TO HY0230261 FOR UNSPECIFIED TOLERANCES.
2. CHAMFER M/CD SHARP EDGES 1.2 TO 1.0 AT 45°.
3. INTERNAL M/CD CORNER RADII 1 TO 0.7.
4. THE SURFACE ROUGHNESS WHEREVER NOT SHOWN SHALL BE TAKEN FROM THE SURFACE ROUGHNESS SHOWN OUT SIDE BACK SLASHES GIVEN AT THE TOP MOST RIGHT CORNER OF THE DRG.

TYPE OF PRODUCT
OR
NAME OF CUSTOMER/PROJECT

BHARAT HEAVY ELECTRICALS LTD.
HYDERABAD

	NAME	SIGN.	DATE	NO.OF VAR.
DRN.	ASHOK		06.06.84	NA
CHD.	AMAN		02.08.84	
APPD.	S.G		12.11.84	

DEPT.	PULV-ENGG	SCALE	WEIGHT(Kg)	REF. TO ASSY DRG.	ITEM NO.	NO.OF ITEMS
CODE	4460	1:2	5.20	1-61-080-00180 (C-80-654-1)	02	

TITLE
JOURNAL HEAD LINER I

DRAWING NO. 2-61-080-00420 REV. 03

SHEET NO. 01 NO OF SHEETS 01

REV.	DATE	ALTERED	CHECKED	APPD.	REV.	DATE	ALTERED	CHECKED	APPD.	REV.	DATE	ALTERED	CHECKED	APPD.	REV.	DATE	ALTERED	CHECKED	APPD.
ZONE					ZONE					ZONE					ZONE				
															03	11.05.05	DRAWING IS REDRAWN ON ACAD INCORPORATING THE ALL PREVIOUS REVISIONS		

TD-150/REV.NO.03 SIZE A2

FIRST ANGLE PROJECTION

(ALL DIMENSIONS ARE IN mm)

DRG. NO. 2-61-088-02057

THE INFORMATION ON THIS DOCUMENT IS THE PROPERTY OF BHARAT HEAVY ELECTRICALS LIMITED. IT MUST NOT BE USED DIRECTLY OR INDIRECTLY IN ANY WAY DETRIMENTAL TO THE INTEREST OF THE COMPANY

COMPUTER FILE NAME 26102057dwg.

REF. DRG. NO.

SIGN. AND DATE

INVENTORY NO

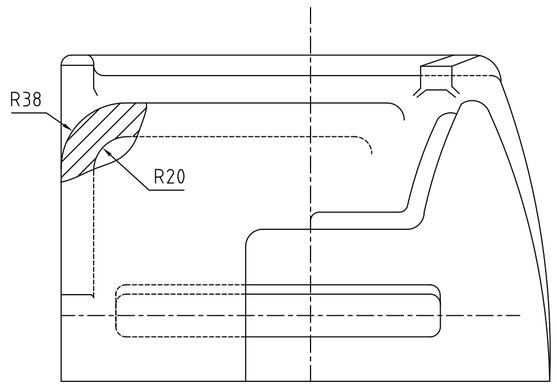

VIEW Q-Q

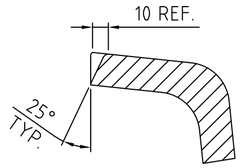

SECTION D-D

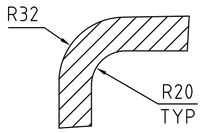

SECTION F-F

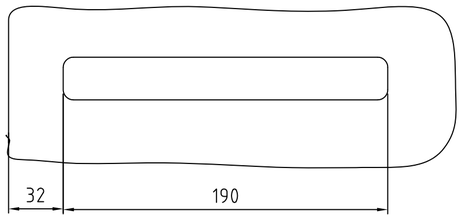

VIEW B-B

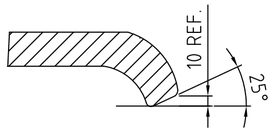

SECTION E-E

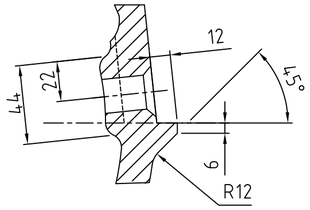

SECTION C-C

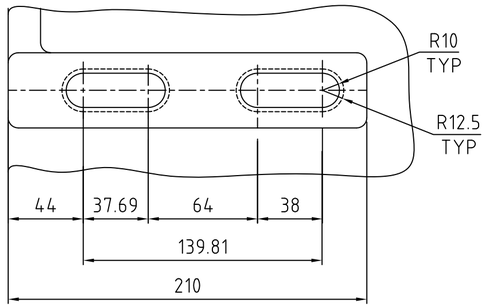

VIEW A-A

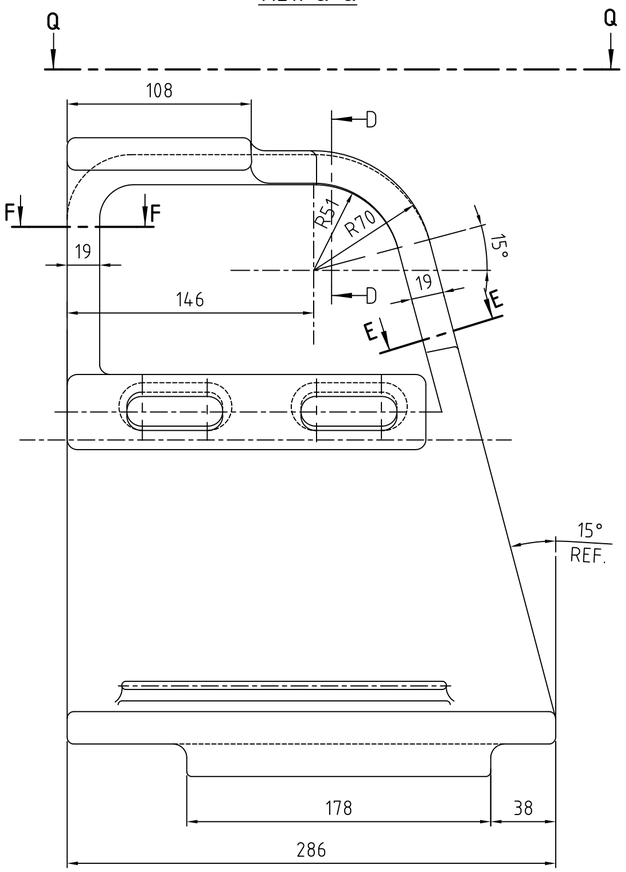

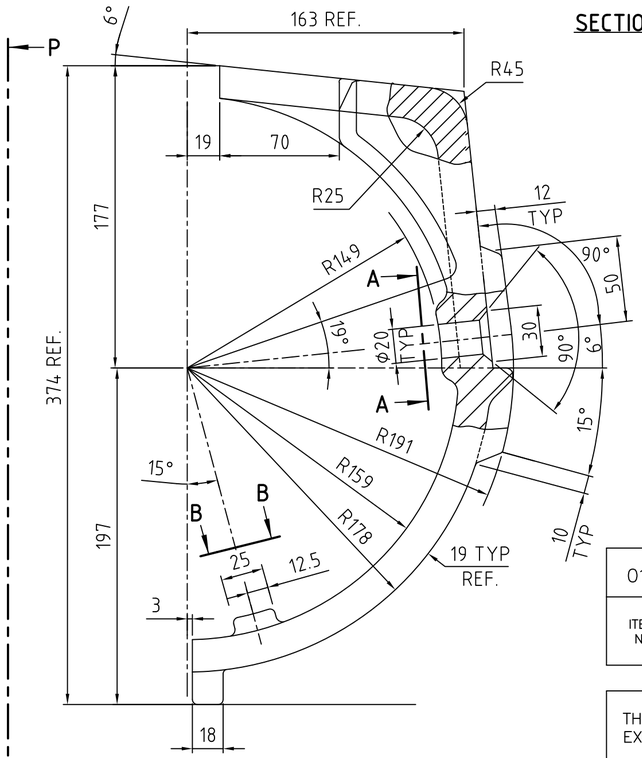

VIEW P-P

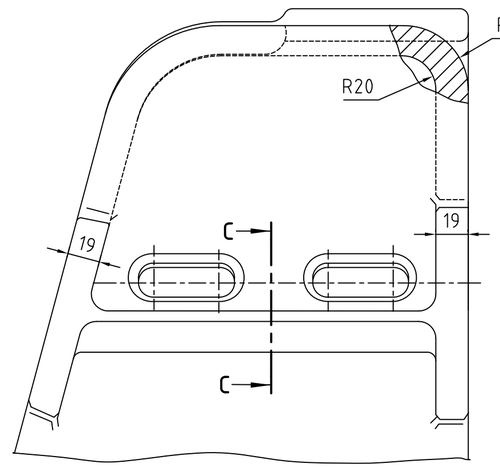

NOTE:

1.UNLESS OTHERWISE NOTED:

A. ALL INSIDE CORNER FILLETS TO BE R6

B. ALL OUTSIDE CORNER RADII TO BE R3

2.CASTING TOL. SHOULD BE WITH IN ANGULAR 0°6′ +0.00 −1.6

3.CASTING SHALL BE SUPPLIED AS PER DRAWING DIMENSIONS AS IT IS ASSEMBLED AS IT IS.

ITEM NO.	DESCRIPTION	DRAWING NO.	VAR. NO.	RAW MATERIAL SIZE OR CASTING DRG. NO. OR FORGING DRG. NO.	MATERIAL CODE / MATERIAL SPECN.	NET WT. / QUANTITY	GROSS WT.
01	CASTING				BA9114134721	22.0	
					AA19741	1	

THE FOLLOWING CONDITIONS APPLY EXCEPT OTHERWISE STATED.

1. REF. TO HY0230261 FOR UNSPECIFIED TOLERANCES.
2. CHAMFER M/CD. SHARP EDGES 1.2 TO 1.0 AT 45°.
3. INTERNAL M/CD. CORNER RADII 1 TO 0.7
4. THE SURFACE ROUGHNESS WHERE-EVER NOT SHOWN SHALL BE TAKEN FROM THE SURFACE ROUGHNESS SHOWN OUT SIDE THE BACK SLASH GIVEN OR THE TOP MOST RIGHT CORNER OF THE DRG.

TYPE OF PRODUCT

NAME OF CUSTOMER/PROJECT

883 XRP BOWL MILL

BHARAT HEAVY ELECTRICALS LIMITED
HYDERABAD

	NAME	SIGN.	DATE	NO.OF VAR.
DRN.	KRISHNA		29.11.03	
CHD.	G.S.N.M.R		29.11.03	
APPD.				

DEPT. PULV ENGG.	UNTOL. DIMS. GR.		SCALE	WEIGHT (KG)	REF. TO ASSY DRG.	ITEM NO.	NO.OF ITEMS
CODE 446	∅/M/∅		1:2.5	22.0	2.61.088.02067	01	06

TITLE

JOURNAL HEAD LINER

DRAWING NO. 2-61-088-02057

REV. 02

SHEET NO. 01 NO OF SHEETS 01

REV.	DATE	ALTERED	APPD.	REV.	DATE	ALTERED	APPD.	REV.	DATE	ALTERED	APPD.
		CHD.				CHD.		02	29.11.03	CHD. G.S.N.M.R	
ZONE				ZONE				ZONE			

DRAWING REDRAWN ON AUTOCAD

FIRST ANGLE PROJECTION

(ALL DIMENSIONS ARE IN mm)

DRG. NO 2-61-088-02060

THE INFORMATION ON THIS DOCUMENT IS THE PROPERTY OF BHARAT HEAVY ELECTRICALS LIMITED. IT MUST NOT BE USED DIRECTLY OR INDIRECTLY IN ANY WAY DETRIMENTAL TO THE INTEREST OF THE COMPANY

COMPUTER FILE NAME 2610206O.DWG

REF. DRG. NO.

SIGN. AND DATE

INVENTORY NO

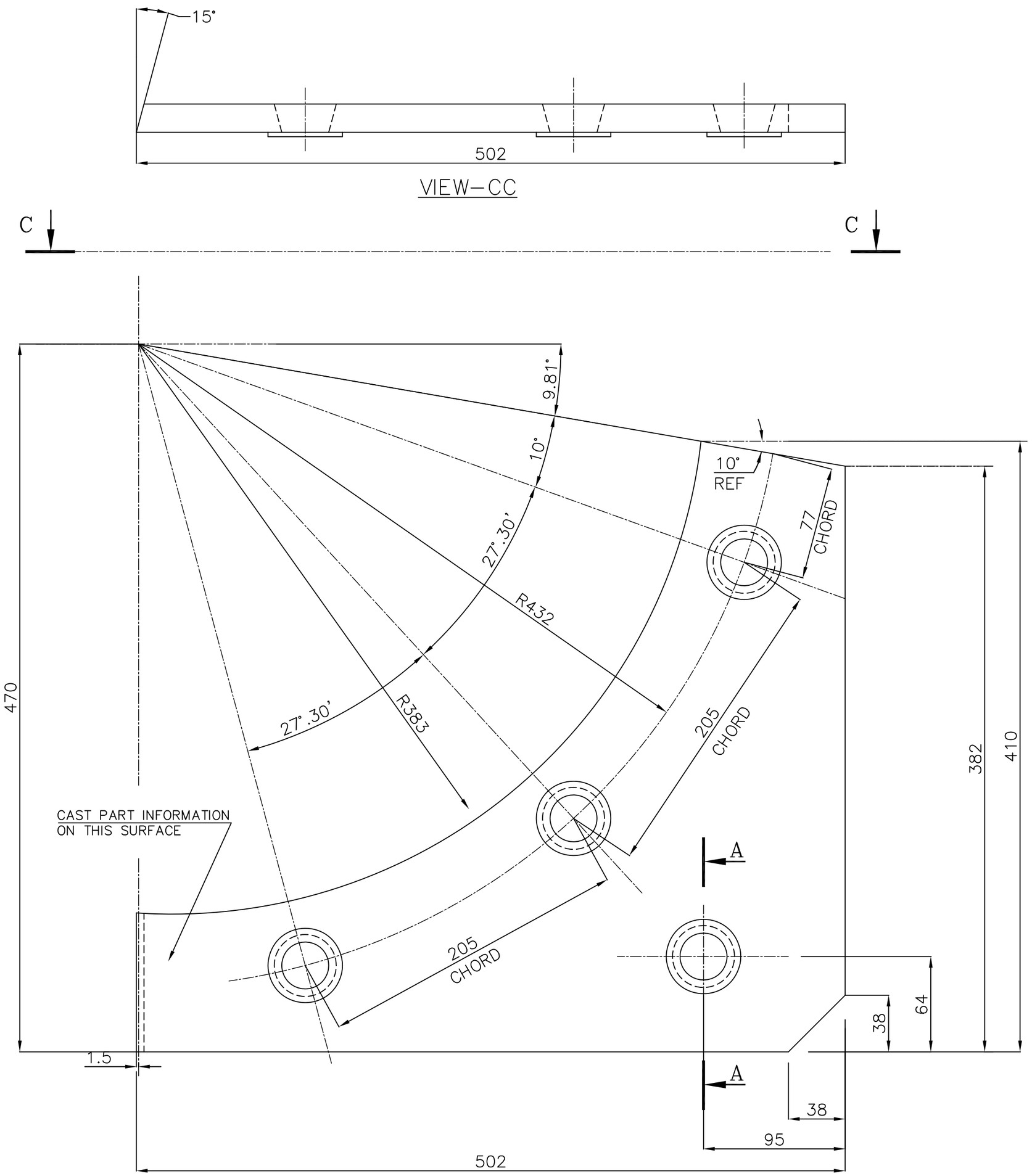

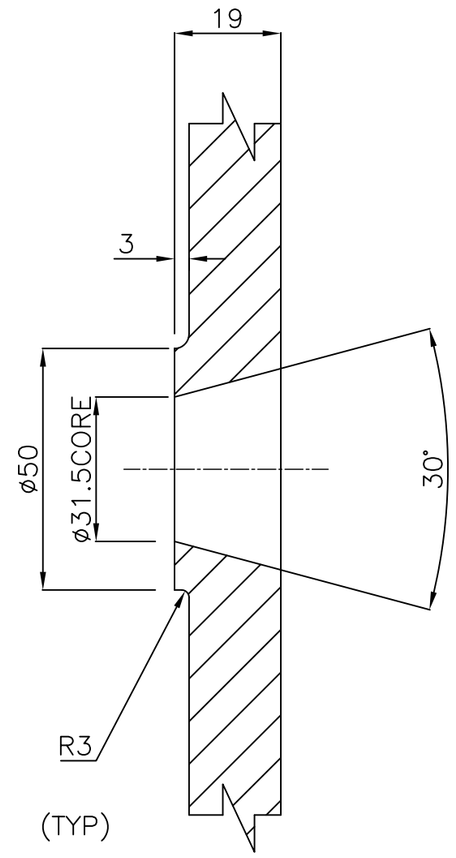

SECTION-AA

NOTE:

1. ALL RADII TO BE 1.5mm UNLESS OTHERWISE SPECIFED.
2. CASTING TOL. SHOULD BE WITHIN $^{+0.0}_{-1.6}$ ANGULAR 0°6'
3. CASTING SHALL SUPPLIED ASPER DRG.DIMENSIONS WITH OUT ANY ALLOWANCES AS THE ITEM IS ASSEMBLD AS IT IS.

ITEM NO.	DESCRIPTION	DRAWING NO.	VAR. NO.	RAW MATERIAL SIZE OR CASTING DRG. NO. OR FORGING DRG. NO.	MATERIAL CODE / MATERIAL SPECN.	NET WT. / QUANTITY	GROSS WT.
01	CASTING				BA9114134764 / AA19741	16.00 / 1	

THE FOLLOWING CONDITIONS APPLY EXCEPT OTHERWISE STATED.

1. REF. TO HY0230261 FOR UNSPECIFIED TOLERANCES.
2. CHAMFER M/CD. SHARP EDGES 1.2 TO 1.0 AT 45°.
3. INTERNAL M/CD. CORNER RADII 1 TO 0.7
4. THE SURFACE ROUGHNESS WHERE-EVER NOT SHOWN SHALL BE TAKEN FROM THE SURFACE ROUGHNESS SHOWN OUT SIDE THE BACK SLASH GIVEN OR THE TOP MOST RIGHT CORNER OF THE DRG.

TYPE OF PRODUCT

NAME OF CUSTOMER/PROJECT: 883 XRP BOWL MILL

BHARAT HEAVY ELECTRICALS LIMITED
HYDERABAD

	NAME	SIGN.	DATE	NO.OF VAR.
DRN.	RAZVI		13.11.03	
CHD.	G.S.N.M.RAO		13.11.03	
APPD.				

DEPT.	UNTOL. DIMS. GR.	SCALE	WEIGHT (KG)	REF. TO ASSY DRG.	ITEM NO.	NO.OF ITEMS
PULV ENGG. CODE 446	¢/M/¢	1:2.5	16.00	2.61.088.02060	4	5

TITLE: JOURNAL HEAD LINER

DRAWING NO. 2-61-088-02060 REV. 03

SHEET NO. 01 NO OF SHEETS 01

REV.	DATE	ALTERED	APPD.	REV.	DATE	ALTERED	APPD.	REV.	DATE	ALTERED	APPD.
		CHD.				CHD.		03	12.7.08	CHD.	
ZONE				ZONE				ZONE			

DIM 470 AND ANGLE 9.81° ADDED.

FIRST ANGLE PROJECTION

(ALL DIMENSIONS ARE IN mm)

DRG. NO 2-61-088-02061

THE INFORMATION ON THIS DOCUMENT IS THE PROPERTY OF BHARAT HEAVY ELECTRICALS LIMITED. IT MUST NOT BE USED DIRECTLY OR INDIRECTLY IN ANY WAY DETRIMENTAL TO THE INTEREST OF THE COMPANY

COMPUTER FILE NAME 2610206 1.DWG

REF. DRG. NO.

SIGN. AND DATE

INVENTORY NO

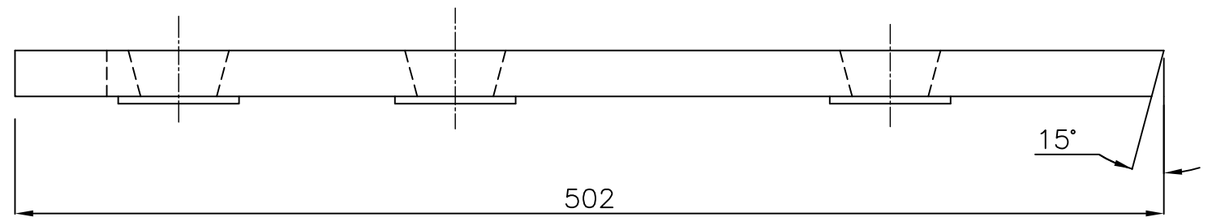

VIEW-CC

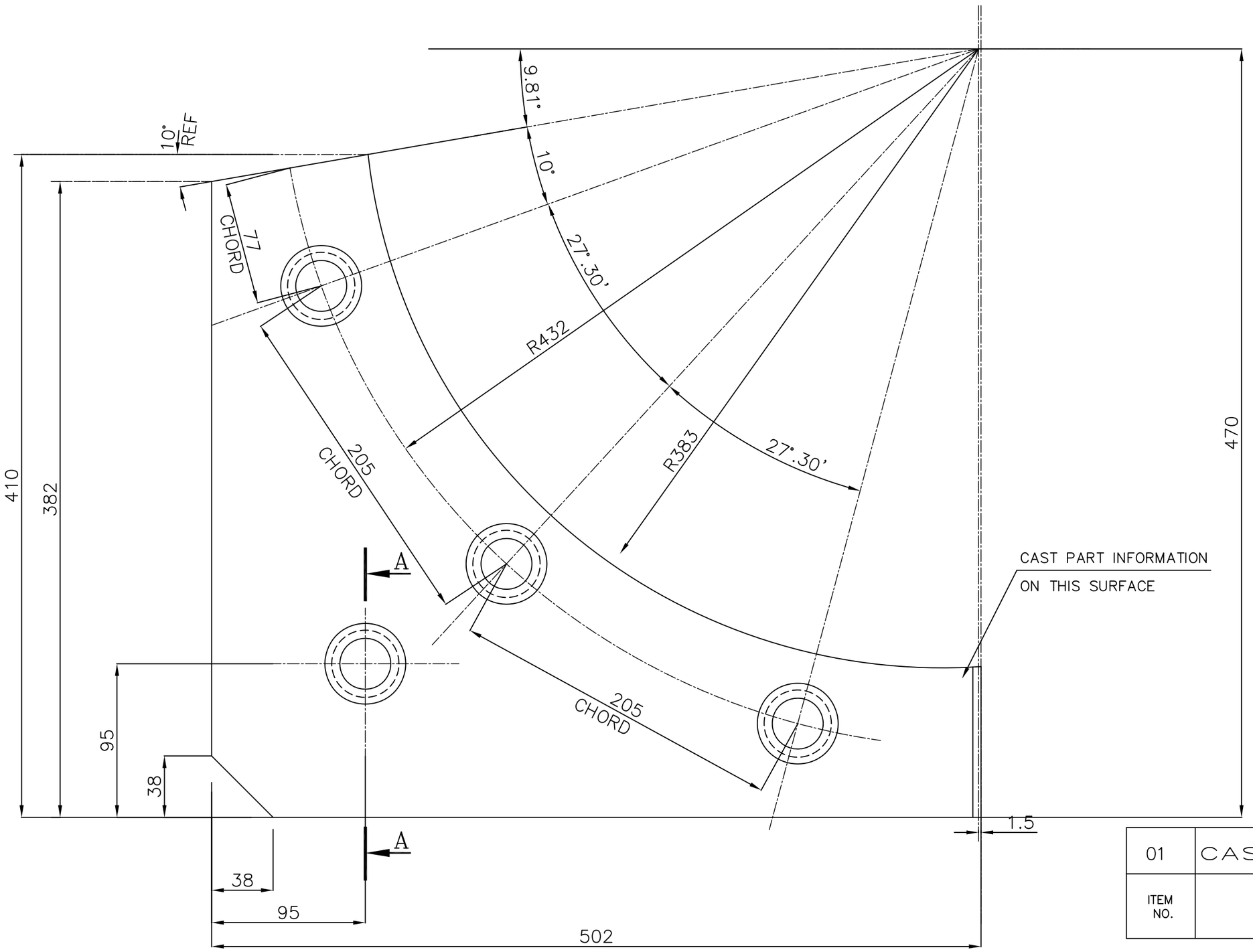

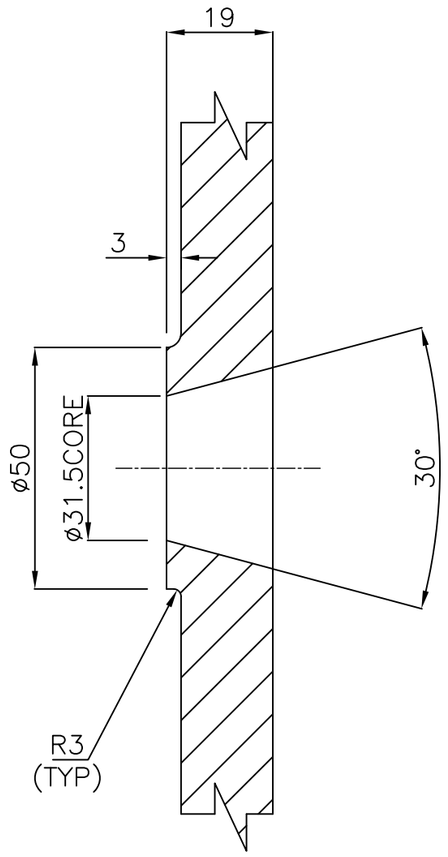

SECTION-AA

NOTE:

1. ALL RADII TO BE 1.5mm UNLESS OTHERWISE SPECIFED.
2. CASTING TOL. SHOULD BE WITHIN $^{+0.0}_{-1.6}$ ANGULAR 0°6'
3. CASTING SHALL BE SUPPLIED AS PER DRAWING DIMENSIONS WITHOUT ANY ALLOWANCES AS THE ITEM IS ASSEMBLED AS IT IS

ITEM NO.	DESCRIPTION	DRAWING NO.	VAR. NO.	RAW MATERIAL SIZE OR CASTING DRG. NO. OR FORGING DRG. NO.	MATERIAL CODE / MATERIAL SPECN.	NET WT.	GROSS WT. / QUANTITY
01	CASTING				BA9114134772 / AA19741	16.00	1

THE FOLLOWING CONDITIONS APPLY EXCEPT OTHERWISE STATED.

1. REF. TO HY0230261 FOR UNSPECIFIED TOLERANCES.
2. CHAMFER M/CD. SHARP EDGES 1.2 TO 1.0 AT 45°.
3. INTERNAL M/CD. CORNER RADII 1 TO 0.7
4. THE SURFACE ROUGHNESS WHERE-EVER NOT SHOWN SHALL BE TAKEN FROM THE SURFACE ROUGHNESS SHOWN OUT SIDE THE BACK SLASH GIVEN OR THE TOP MOST RIGHT CORNER OF THE DRG.

TYPE OF PRODUCT

NAME OF CUSTOMER/PROJECT: 883 XRP BOWL MILL

BHARAT HEAVY ELECTRICALS LIMITED
HYDERABAD

	NAME	SIGN.	DATE	NO.OF VAR.
DRN.	RAZVI		13.11.03	
CHD.	G.S.N.M.RAO		13.11.03	
APPD.				

DEPT.	UNTOL. DIMS. GR.	SCALE	WEIGHT (KG)	REF. TO ASSY DRG.	ITEM NO.	NO.OF ITEMS
PULV ENGG. CODE 446	¢/M/¢	1:2.5	16.00	2.61.088.02068	3	5

TITLE: JOURNAL HEAD LINER

DRAWING NO. 2-61-088-02061 REV. 03

SHEET NO. 01 NO OF SHEETS 01

REV.	DATE	ALTERED	APPD.
		CHD.	
03	12.7.08	CHD.	

ZONE

DIM 470 AND ANGLE 9.81° ADDED.

FIRST ANGLE PROJECTION

(ALL DIMENSIONS ARE IN mm)

DRG. NO. 2-61-088-02062

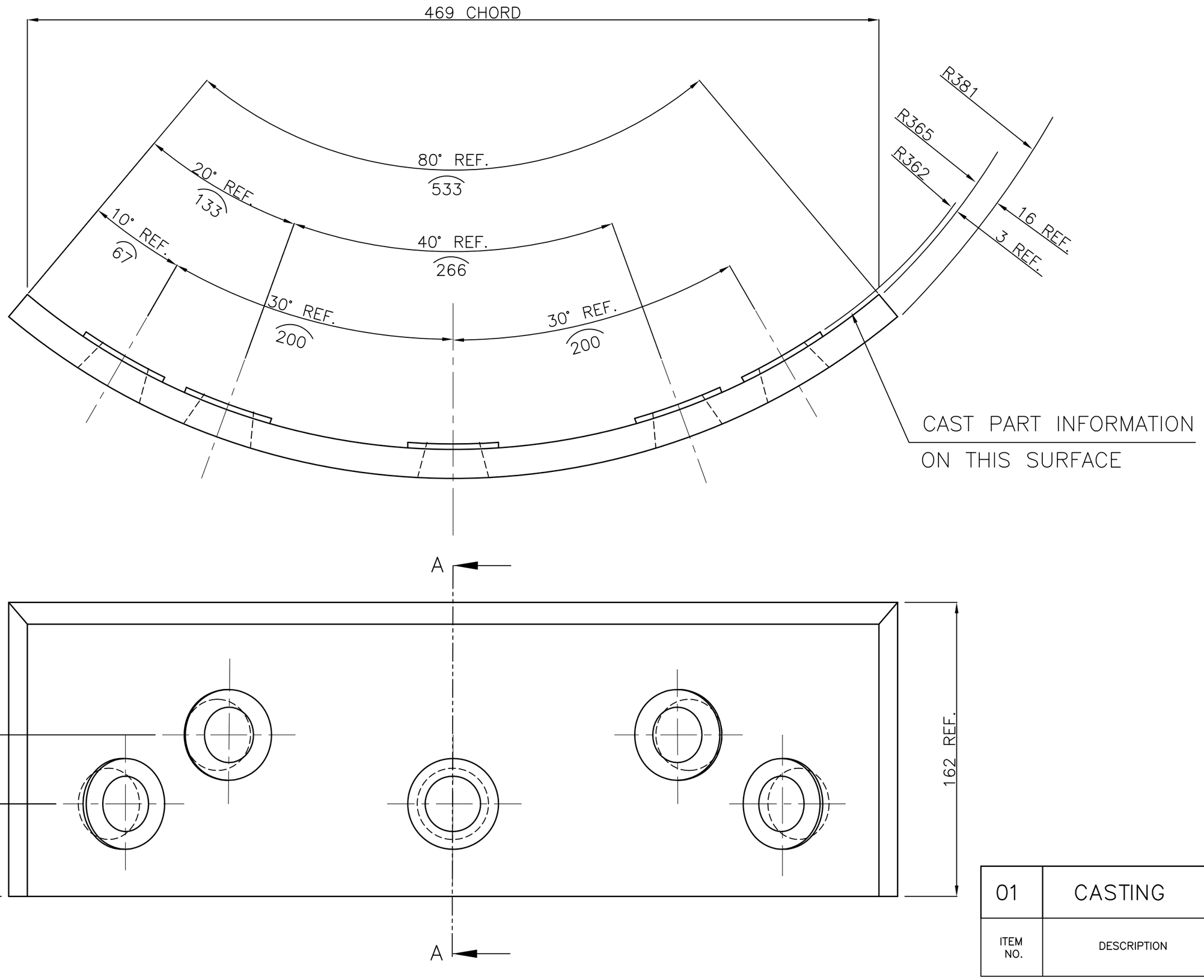

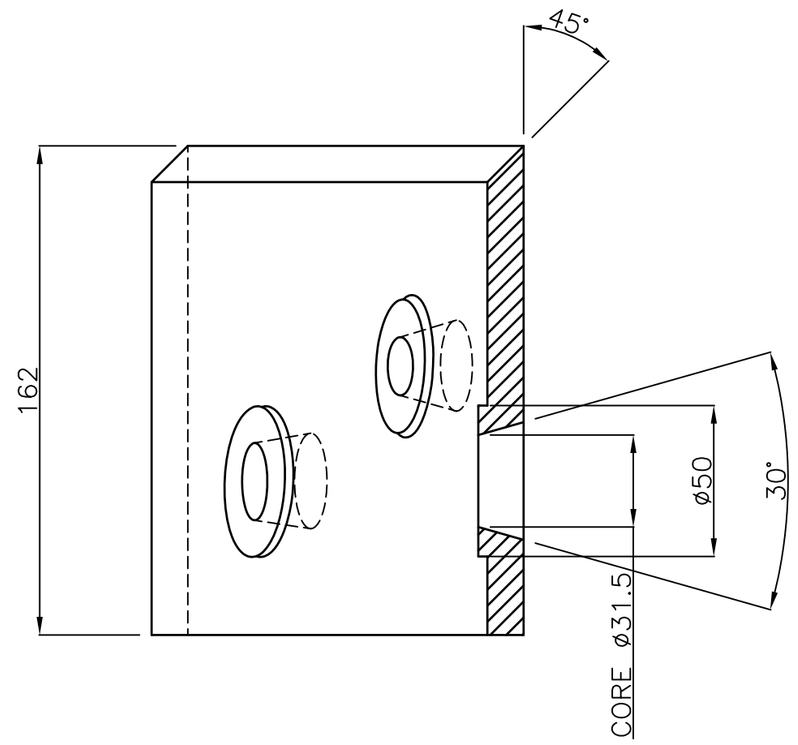

SECTION AA

NOTES:

01. ALL RADII TO BE 1.5MM RADIUS UNLESS OTHERWISE SPECIFIED

02. ALL PERIPHERAL LENGTHS (P.L) ARE BASED ON R 341

03. CASTING TOL. SHOULD BE WITHIN $^{+0.0}_{-1.6}$ ANGULAR 0°6'

04. CASTING SHALL BE SUPPLIED AS PER DRG. DIMENSIONS WITH OUT ANY TOLERANCES AS THIS IS ASSEMBLED AS IT IS.

ITEM NO.	DESCRIPTION	DRAWING NO.	VAR. NO.	RAW MATERIAL SIZE OR CASTING DRG. NO. OR FORGING DRG. NO.	MATERIAL CODE / MATERIAL SPECN.	NET WT.	GROSS WT. / QUANTITY
01	CASTING				BA9114134780 / AA19741	10.00	1

THE FOLLOWING CONDITIONS APPLY EXCEPT OTHERWISE STATED.

1. REF. TO HY0230261 FOR UNSPECIFIED TOLERANCES.
2. CHAMFER M/CD. SHARP EDGES 1.2 TO 1.0 AT 45°.
3. INTERNAL M/CD. CORNER RADII 1 TO 0.7
4. THE SURFACE ROUGHNESS WHERE-EVER NOT SHOWN SHALL BE TAKEN FROM THE SURFACE ROUGHNESS SHOWN OUT SIDE THE BACK SLASH GIVEN OR THE TOP MOST RIGHT CORNER OF THE DRG.

TYPE OF PRODUCT
NAME OF CUSTOMER/PROJECT: 883 XRP BOWL MILL

BHARAT HEAVY ELECTRICALS LIMITED
HYDERABAD

	NAME	SIGN.	DATE	NO.OF VAR.
DRN.	KRISHNA		24.11.03	
CHD.	G.S.N.M.R		24.11.03	
APPD.			24.11.03	

DEPT. / CODE	UNTOL. DIMS. GR.		SCALE	WEIGHT (KG)	REF. TO ASSY DRG.	ITEM NO.	NO.OF ITEMS
PULV ENGG. / 446	¢/M/¢		1:2	10.00	2.61.088.02068	2	5

TITLE: JOURNAL HEAD LINER

DRAWING NO. 2-61-088-02062 REV. 02

SHEET NO. 01 NO OF SHEETS 01

REV.	DATE	ALTERED / CHD.	APPD.	REV.	DATE	ALTERED / CHD.	APPD.	REV.	DATE	ALTERED / CHD.	APPD.
								02		KRISHNA / G.S.N.M.R	

ZONE

DRAWING REDRAWN ON AUTOCAD

THE INFORMATION ON THIS DOCUMENT IS THE PROPERTY OF BHARAT HEAVY ELECTRICALS LIMITED. IT MUST NOT BE USED DIRECTLY OR INDIRECTLY IN ANY WAY DETRIMENTAL TO THE INTEREST OF THE COMPANY

COMPUTER FILE NAME 26102062.dwg

REF. DRG. NO.

SIGN. AND DATE

INVENTORY NO

FIRST ANGLE PROJECTION

(ALL DIMENSIONS ARE IN mm)

M.E.S

DRG. NO. 2-61-300-00551

SH. OF

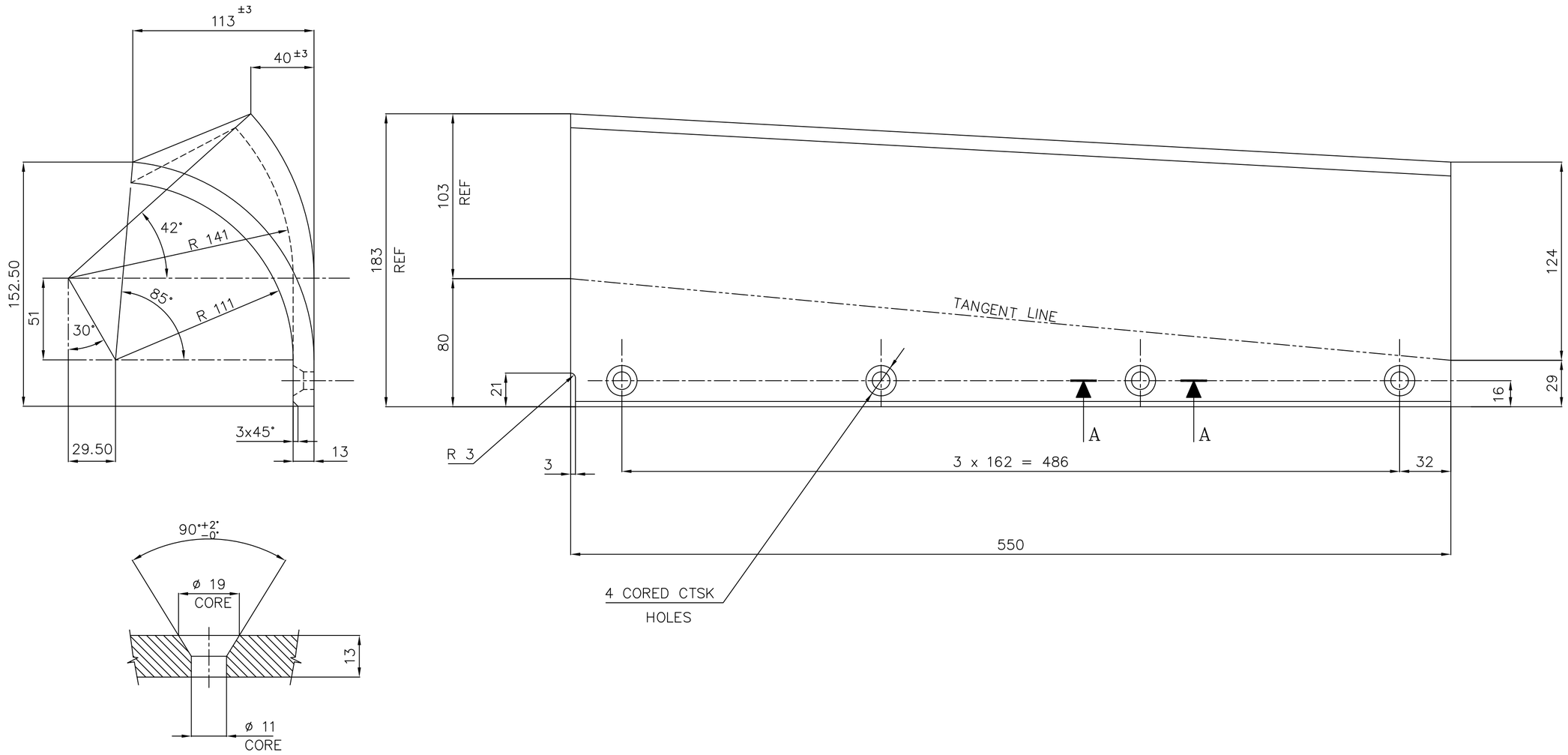

SECTION–A–A

NOTES :–

1. BREAK ALL SHARP EDGES AND CORNERS UNLESS OTHERWISE SPECIFIED.
2. PATTERN No. 2–61–300–00551.
3. CORED HOLES ARE TO BE CLEANED AND FREE FROM FINS, SAND ETC.
4. DIMENSIONS & LOCATIONS OF THE CORED HOLES ARE TO BE ENSURED WITH A TEMPLATE.

ITEM NO.	DESCRIPTION	DRAWING NO	IT NO. / VAR NO	MATL CODE / MATL SPCN.	UNIT WT. / QTY
	CASTING			BA9114103044 / AA19741	10.00

THE FOLLOWING CONDITIONS APPLY EXCEPT OTHERWISE STATED.

1. REF. TO HY0230261 FOR UNSPECIFIED TOLERANCES.
2. CHAMFER M/CD. SHARP EDGES 1.2 TO 1.0 AT 45°
3. INTERNAL M/CD. CORNER RADII 1 TO 0.7
4. THE SURFACE ROUGHNESS WHERE–EVER NOT SHOWN SHALL BE TAKEN FROM THE SURFACE ROUGHNESS SHOWN OUT SIDE THE BACK SLASH GIVEN ON THE TOP MOST RIGHT CORNER OF THE DRG.

TYPE OF PRODUCT OR NAME OF CUSTOMER/PROJECT: 883,1003 XRP BOWL MILL

BHARAT HEAVY ELECTRICALS LIMITED HYDERABAD

	NAME	SIGN.	DATE	NO.OF VAR.
DRN.	N.D.S		11.03.98	
CHD.	G.S.N.M.R		16.10.03	
APPD.	S.G.		29.06.04	

DEPT.	UNTOL. DIMS.	SCALE	WEIGHT (KG)	REF. TO ASSY. DRG.	ITEM NO.	NO.OF ITEMS
BMD / DEPT CODE. 446	GR. ∅/M/∅	1:2 / 1:1	10.00	C–101–00215/06 / 2–61–388–02133	1	5

TITLE: DEFLECTOR BLADE

CARD CODE

DRAWING NO. 2–61–300–00551 REV. 04

SHT. No 01 NO. OF SHT. 01

REV.	DATE	ALTERED / CHD/APPD	ZONE
04	29.06.04	ALTERED N.D.S / CHD/APPD S.G. — WEIGHT WAS 7.8 NOTE 5 DELETED	
03	11.03.98	ALTERED N.D.S / CHD/APPD GSNMR — DRG. REDRAWN INCARPORATING ALL PREVIOUS REVISIONS	

THE INFORMATION ON THIS DOCUMENT IS THE PROPERTY OF BHARAT HEAVY ELECTRICALS LIMITED. IT MUST NOT BE USED DIRECTLY OR INDIRECTLY IN ANY WAY DETRIMENTAL TO THE INTEREST OF THE COMPANY

COMPUTER FILE NAME 26100551.DWG

REF. DRG. NO. C101–00215–6

GENERAL DIMENSIONAL LIMITS,FITS & TOLERANCES AS PER HY0230261

SIGN. AND DATE

INVENTORY NO

FIRST ANGLE PROJECTION

(ALL DIMENSIONS ARE IN mm)

DRG.NO. 2-61-300-01184

THE INFORMATION ON THIS DOCUMENT IS THE PROPERTY OF BHARAT HEAVY ELECTRICALS LIMITED.
IT MUST NOT BE USED DIRECTLY OR INDIRECTLY IN ANY WAY DETRIMENTAL TO THE INTEREST OF THE COMPANY.

COMP. FILE NAME 26101184.DWG

REF.DRG.NO.

INVENTORY NO.

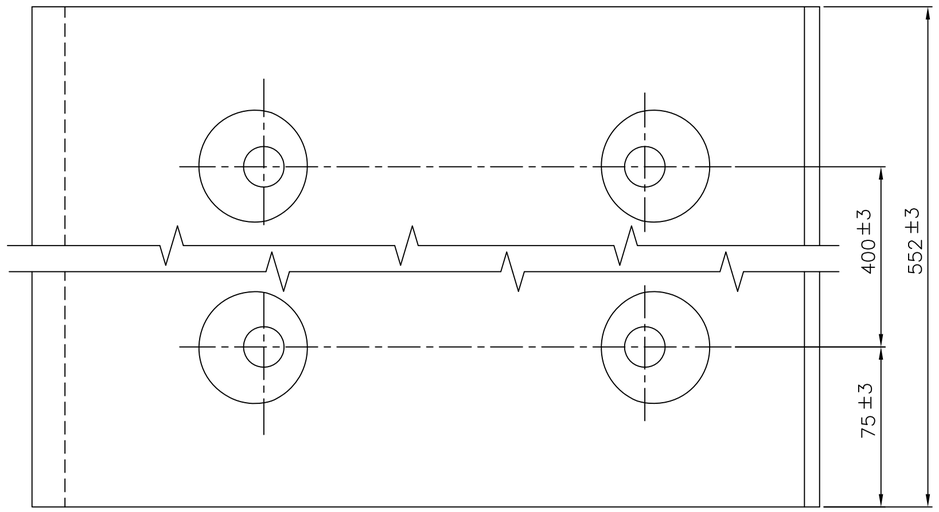

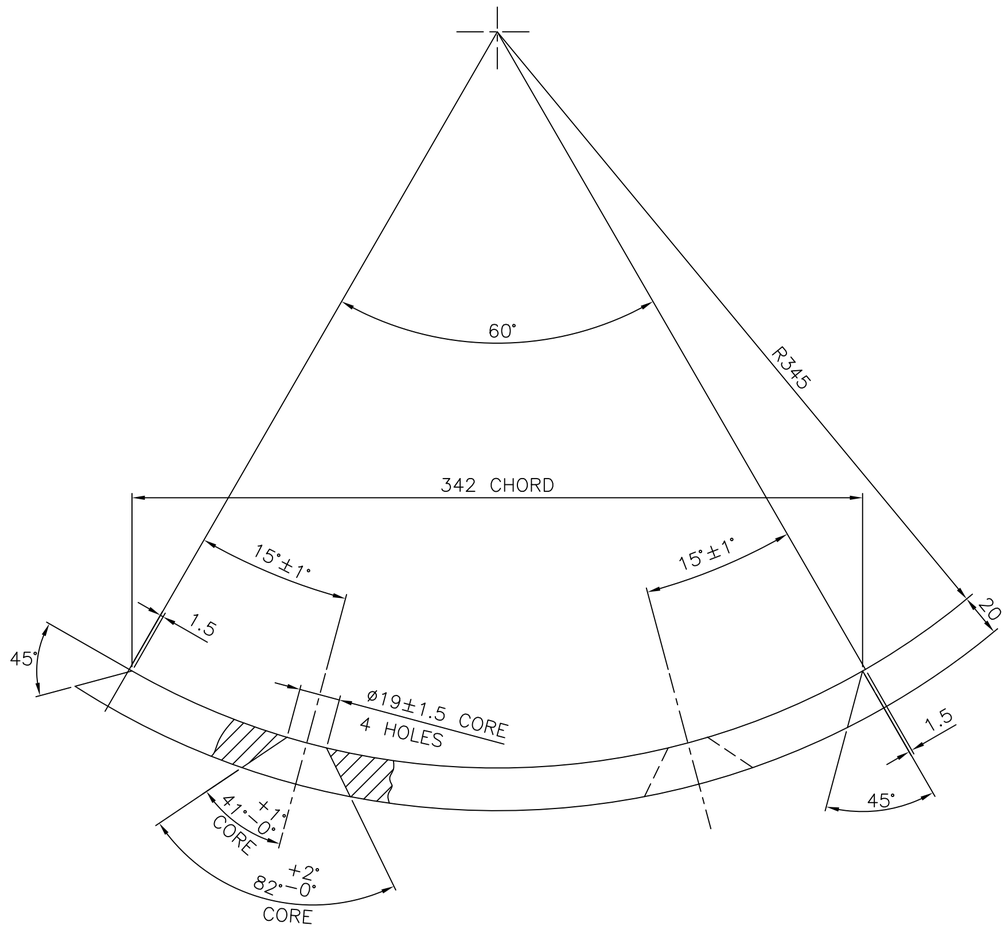

ITEM NO	DESCRIPTION	DRAWING NO.	VAR. NO.	RAW MATERIAL SIZE OR CASTING DRG.NO. OR FORGING DRG.NO.	MATERIAL CODE	NET WT.	GROSS WT.
	CASTING				BA9114153572	32.000	
					AA19741		
					MATERIAL SPECN.	QUANTITY	

THE FOLLOWING CONDITIONS APPLY EXCEPT OTHERWISE STATED...

1. REF.TO HY0230261 FOR UNSPECIFIED TOLERANCES.
2. CHAMFER M/CD SHARP EDGES 1.2 TO 1.0 AT 45°.
3. INTERNAL M/CD CORNER RADII 1 TO 0.7.
4. THE SURFACE ROUGHNESS WHEREVER NOT SHOWN SHALL BE TAKEN FROM THE SURFACE ROUGHNESS SHOWN OUT SIDE BACK SLASHES GIVEN AT THE TOP MOST RIGHT CORNER OF THE DRG.

TYPE OF PRODUCT OR NAME OF CUSTOMER/PROJECT: 1003 XRP BOWL MILL

BHARAT HEAVY ELECTRICALS LTD. HYDERABAD

	NAME	SIGN.	DATE
DRN.	N.D.S		17.02.99
CHD.	S.G		17.02.99
APPD.	K.M.R		17.02.99

NO.OF VAR. -NA-

DEPT.	SCALE	WEIGHT(Kg)	REF. TO ASSY DRG.	ITEM NO.	NO.OF ITEMS
PULV.ENGG	1:2	32.000	C-GP-4732 P/N. GP-4732	-NA-	-NA-
CODE 446					

TITLE: INNER CONE SPOUT SEGMENT

DRAWING NO. 2-61-300-01184 REV. 02

SHEET NO. 01 NO OF SHEETS 01

REV.	DATE	ALTERED	CHECKED	APPD.
02	17.02.99	DRAWING REDRAWN		

TD-150/REV.NO.03 SIZE A2

FIRST ANGLE PROJECTION

(ALL DIMENSIONS ARE IN mm)

DRG.NO. 2-61-304-02274

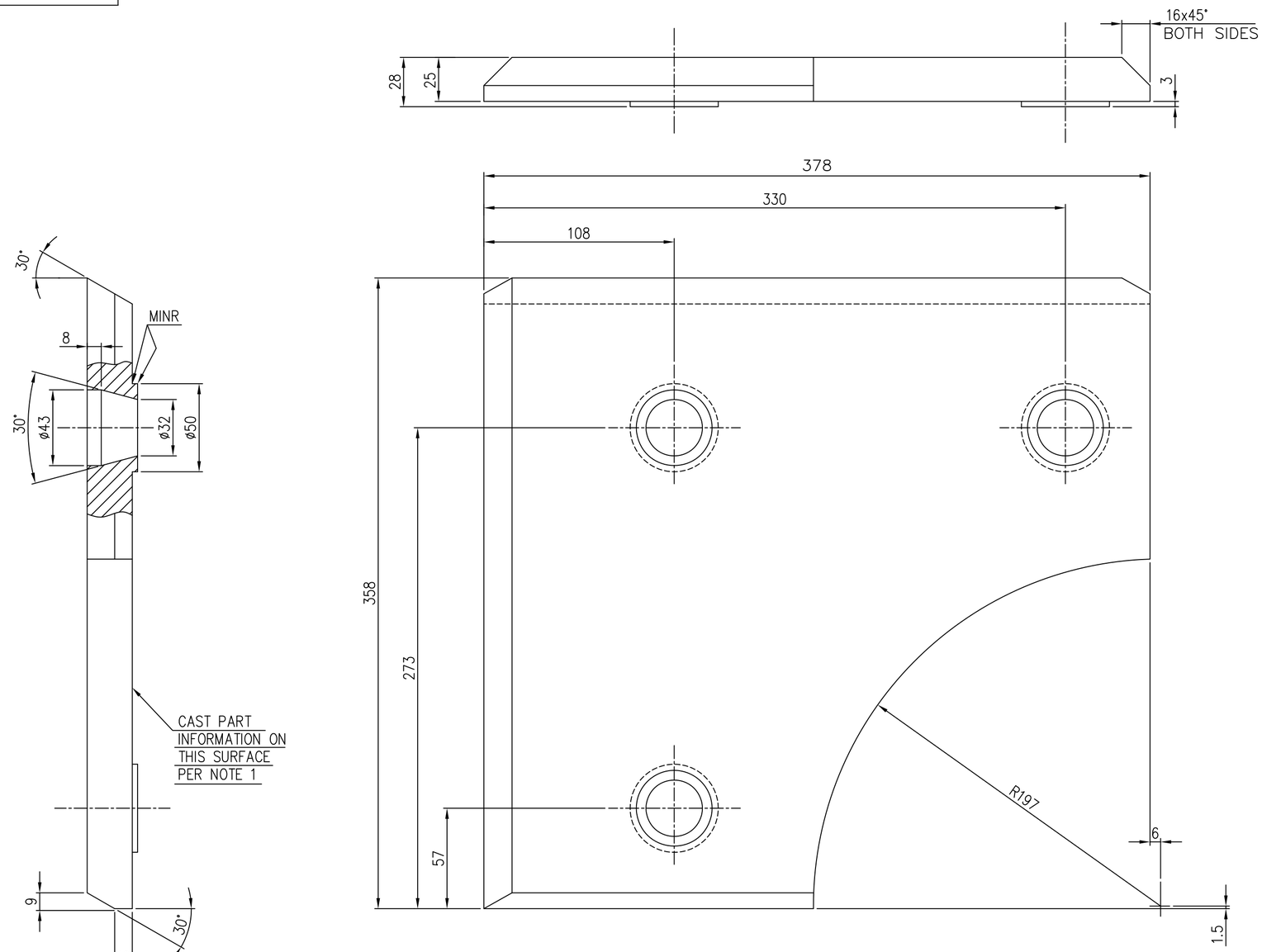

NOTE:-

01. FOLLOWING INFORMATION TO BE CAST IN TO PART USING 3MM MAX. HEIGHT LETTERS 2613042274
02. BREAK ALL SHARP EDGES AND CORNERS UNLESS OTHERWISE NOTED.
03. TOLERANCES UNLESS OTHERWISE NOTED.
CASTING±1.6
ANGULAR ±0.1°

ITEM NO	DESCRIPTION	DRAWING NO.	VAR. NO.	RAW MATERIAL SIZE OR CASTING DRG.NO. OR FORGING DRG.NO.	MATERIAL CODE	NET WT.	GROSS WT.
01	CASTING				BA9114135361	20.500	
					19741	1	
					MATERIAL SPECN.	QUANTITY	

THE FOLLOWING CONDITIONS APPLY EXCEPT OTHERWISE STATED...

1. REF.TO HY0230261 FOR UNSPECIFIED TOLERANCES.
2. CHAMFER M/CD SHARP EDGES 1.2 TO 1.0 AT 45°.
3. INTERNAL M/CD CORNER RADII 1 TO 0.7.
4. THE SURFACE ROUGHNESS WHEREVER NOT SHOWN SHALL BE TAKEN FROM THE SURFACE ROUGHNESS SHOWN OUT SIDE BACK SLASHES GIVEN AT THE TOP MOST RIGHT CORNER OF THE DRG.

TYPE OF PRODUCT OR NAME OF CUSTOMER/PROJECT: 1043 RP BOWL MILL
CHANDRAPUR-500 MW

BHARAT HEAVY ELECTRICALS LTD.
HYDERABAD

	NAME	SIGN.	DATE	NO.OF VAR.
DRN.	n.d.samuel		15.6.99	-NA-
CHD.	s.ghatge		15.6.99	
APPD.	k.m.rao		15.6.99	

DEPT.	PULV. ENGG.	SCALE	WEIGHT(Kg)	REF. TO ASSY DRG.	ITEM NO.	NO.OF ITEMS
CODE	446	1:2	20.500	C-110-00818/1	-NA-	-NA-

TITLE: JOURNAL OPENING FRAME LINER

DRAWING NO. 2-61-304-02274 REV. 00

SHEET NO. 01 NO OF SHEETS 01

REV.	DATE	ALTERED	CHECKED	APPD.	REV.	DATE	ALTERED	CHECKED	APPD.	REV.	DATE	ALTERED	CHECKED	APPD.	REV.	DATE	ALTERED	CHECKED	APPD.
ZONE					ZONE					ZONE					ZONE				

THE INFORMATION ON THIS DOCUMENT IS THE PROPERTY OF BHARAT HEAVY ELECTRICALS LIMITED.
IT MUST NOT BE USED DIRECTLY OR INDIRECTLY IN ANY WAY DETRIMENTAL TO THE INTEREST OF THE COMPANY.

COMP. FILE NAME 26102274.DWG

REF.DRG.NO.

INVENTORY NO.

TD-150/REV.NO.03 SIZE A2

FIRST ANGLE PROJECTION

(ALL DIMENSIONS ARE IN mm)

C.C.S.

DRG. NO. 2-61-304-02275

SH. 01 OF 01

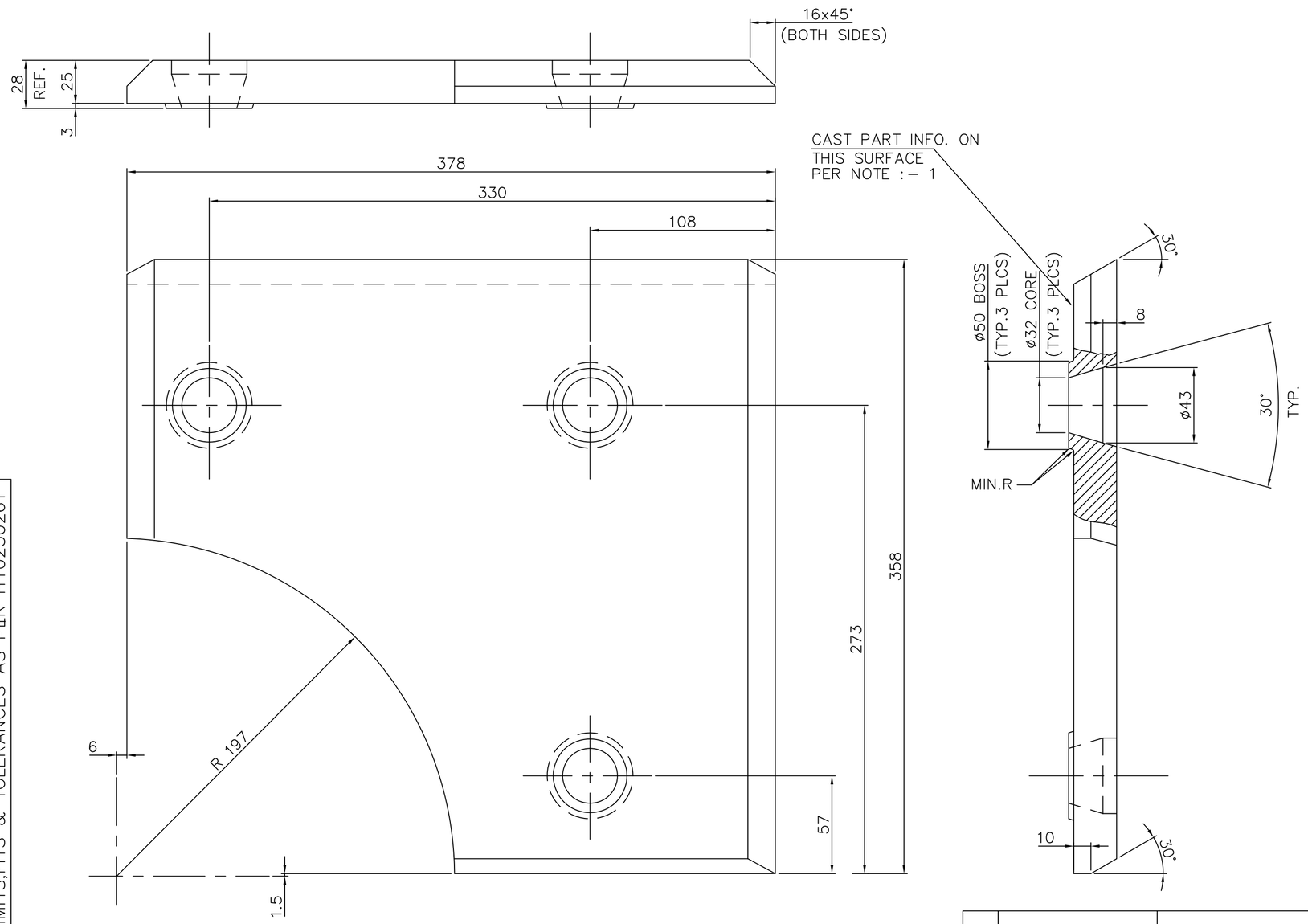

NOTES:

1. FOLLOWING INFORMATION TO BE CAST INTO PART USING 3mm MAX. HEIGHT LETTERS 26130402275
2. BREAK ALL SHARP EDGES AND CORNERS UNLESS OTHERWISE NOTED.
3. TOLERANCES UNLESS OTHERWISE NOTED :-
   CASTING ±1.6
   ANGULAR ±0.1°

ITEM NO	DESCRIPTION	DRAWING NO.	VAR. NO.	RAW MATERIAL SIZE OR CASTING DRG.NO. OR FORGING DRG.NO.	MATERIAL CODE / MATERIAL SPECN.	NET WT.	GROSS WT.
01	CASTING				BA9114135370 / AA19741	20.500	

QUANTITY

THE FOLLOWING CONDITIONS APPLY EXCEPT OTHERWISE STATED...

1. REF.TO HY0230261 FOR UNSPECIFIED TOLERANCES.
2. CHAMFER M/CD SHARP EDGES 1.2 TO 1.0 AT 45°.
3. INTERNAL M/CD CORNER RADII 1 TO 0.7.
4. THE SURFACE ROUGHNESS WHEREVER NOT SHOWN SHALL BE TAKEN FROM THE SURFACE ROUGHNESS SHOWN OUT SIDE BACK SLASHES GIVEN AT THE TOP MOST RIGHT CORNER OF THE DRG.

TYPE OF PRODUCT OR NAME OF CUSTOMER/PROJECT: 1103 XRP BOWL MILL

BHARAT HEAVY ELECTRICALS LTD.
HYDERABAD

	NAME	SIGN.	DATE	NO.OF VAR.
DRN.	C.C.S.		15.6.99	–
CHD.	E.M.A.		15.6.99	
APPD.	K.M.RAO		15.6.99	

DEPT.	UNTOL. DIMS. GR.		SCALE	WEIGHT (KG)	REF. TO ASSY. DRG.	ITEM NO.	NO.OF ITEMS
PULV	~~G/M/F~~		1:1	20.500	C-110-00817/1	–	–
CODE 446							

TITLE: JOURNAL OPENING FRAME LINER

CARD CODE: N.A.

DRAWING NO. 2-61-304-02275 REV. 01

SHT. No 01 NO. OF SHT. 01

REV.	DATE	ALTERED	REV.	DATE	ALTERED	REV.	DATE	ALTERED	REV.	DATE	ALTERED
		CHD/APPD			CHD/APPD			CHD/APPD	01	15.6.99	CHD/APPD
ZONE			ZONE			ZONE			ZONE	DRAWING REDRAWN IN AUTOCAD	

THE INFORMATION ON THIS DOCUMENT IS THE PROPERTY OF BHARAT HEAVY ELECTRICALS LIMITED. IT MUST NOT BE USED DIRECTLY OR INDIRECTLY IN ANY WAY DETRIMENTAL TO THE INTEREST OF THE COMPANY

GENERAL DIMENSIONAL LIMITS,FITS & TOLERANCES AS PER HY0230261

COMPUTER FILE NAME 26102275.DWG

REF. DRG. NO. C-110-00817/1

SIGN. AND DATE

INVENTORY NO

FIRST ANGLE PROJECTION

(ALL DIMENSIONS ARE IN mm)

DRG. NO. 2-61-004-02276 SH. 01 OF 01

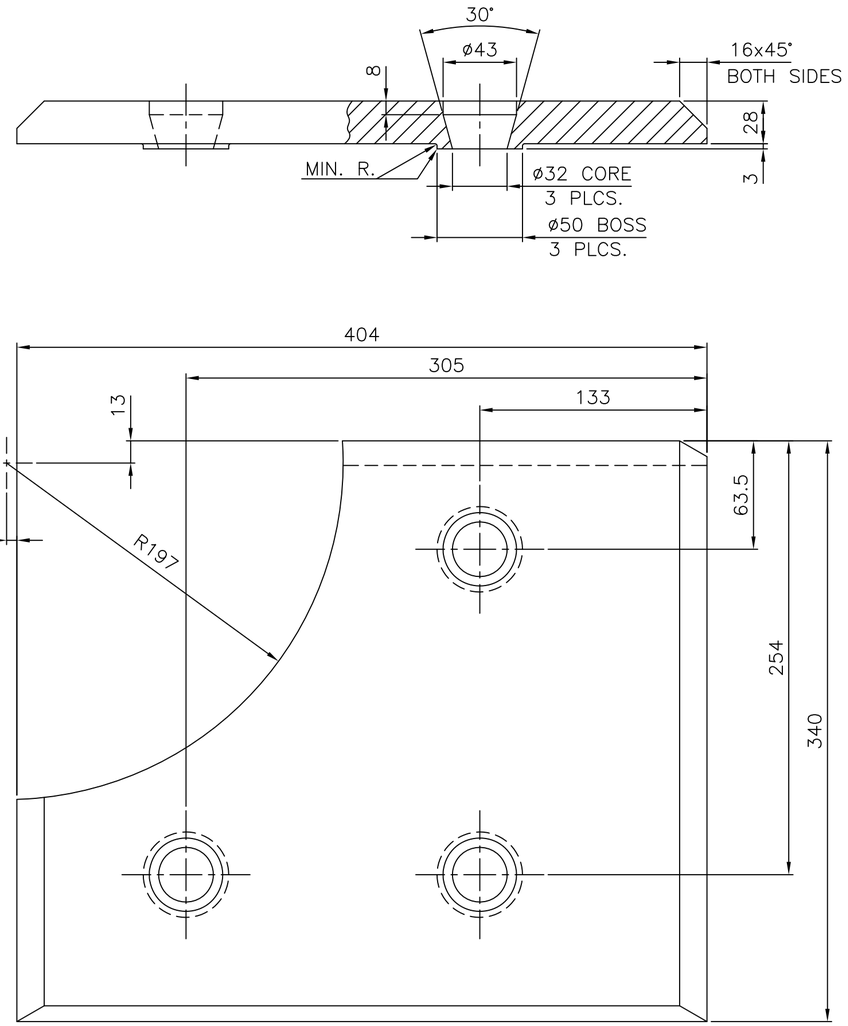

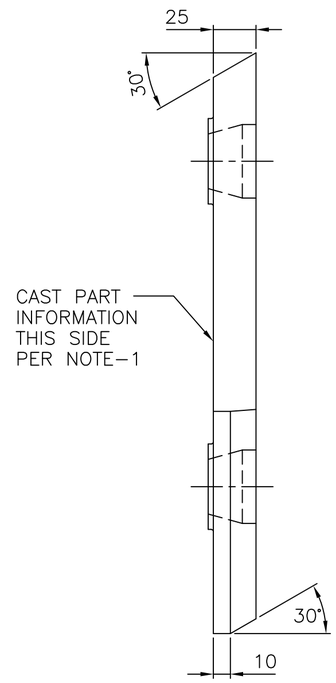

NOTES:-

01. FOLLOWING INFORMATION TO BE CAST INTO PART USING 3mm MAX. HEIGHT LETTERS. 26100402276.

02. BREAK ALL SHARP EDGES AND CORNERS UNLESS OTHERWISE NOTED.

03. TOLERANCES UNLESS OTHERWISE NOTED.
CASTING ±1.6
ANGULAR ±0.1°

ITEM NO.	DESCRIPTION	DRAWING NO.	VAR. NO.	RAW MATERIAL SIZE OR CASTING DRG. NO. OR FORGING DRG. NO.	MATERIAL CODE / MATERIAL SPECN.	NET WT. / QUANTITY	GROSS WT.
01	CASTING				BA9114135388	21.000	
					AA19741	1	

THE FOLLOWING CONDITIONS APPLY EXCEPT OTHERWISE STATED.

1. REF. TO HY0230261 FOR UNSPECIFIED TOLERANCES.
2. CHAMFER M/CD. SHARP EDGES 1.2 TO 1.0 AT 45°.
3. INTERNAL M/CD. CORNER RADII 1 TO 0.7
4. THE SURFACE ROUGHNESS WHERE-EVER NOT SHOWN SHALL BE TAKEN FROM THE SURFACE ROUGHNESS SHOWN OUT SIDE THE BACK SLASH GIVEN ON THE TOP MOST RIGHT CORNER OF THE DRG.

TYPE OF PRODUCT
NAME OF CUSTOMER/PROJECT

1103 XRP BOWL MILL

BHARAT HEAVY ELECTRICALS LIMITED
HYDERABAD

	NAME	SIGN.	DATE	NO.OF VAR.
DRN.	UNIC			
CHD.	S.GHATGE		22.5.99	–
APPD.	K.M.RAO		22.5.99	

DEPT. PULV ENGG. CODE 446	UNTOL. DIMS. GR. ¢/M/F	SCALE 1:2.5	WEIGHT (KG) 21.000	REF. TO ASSY DRG. C-110-00814/1	ITEM NO. –	NO.OF ITEMS –

TITLE: JOURNAL OPENING FRAME LINER

CARD CODE

DRAWING NO. 2-61-304-02276 REV. 01

SHEET NO. 01 NO OF SHEETS 01

REV.	DATE	ALTERED / CHD.	APPD.
01	22.05.99	CHD.	

DRAWING REDRAWN ON ACAD.

ZONE

GENERAL DIMENSIONAL LIMITS,FITS & TOLERANCES AS PER HY0230261

COMPUTER FILE NAME 26102276.DWG

REF. DRG. NO.

SIGN. AND DATE

INVENTORY NO

THE INFORMATION ON THIS DOCUMENT IS THE PROPERTY OF BHARAT HEAVY ELECTRICALS LIMITED. IT MUST NOT BE USED DIRECTLY OR INDIRECTLY IN ANY WAY DETRIMENTAL TO THE INTEREST OF THE COMPANY

FIRST ANGLE PROJECTION

(ALL DIMENSIONS ARE IN mm)

C.C.S.

DRG. NO. 2-61-304-02279

SH. 01 OF 01

THE INFORMATION ON THIS DOCUMENT IS THE PROPERTY OF BHARAT HEAVY ELECTRICALS LIMITED. IT MUST NOT BE USED DIRECTLY OR INDIRECTLY IN ANY WAY DETRIMENTAL TO THE INTEREST OF THE COMPANY

GENERAL DIMENSIONAL LIMITS,FITS & TOLERANCES AS PER HY0230261

INVENTORY NO	SIGN. AND DATE	REF. DRG. NO.	COMPUTER FILE NAME
		C-110-00805/1	26102279.DWG

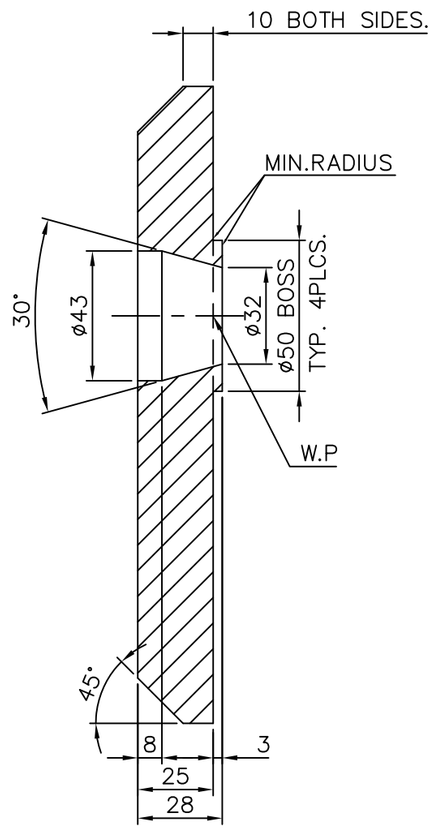

SECTION-AA

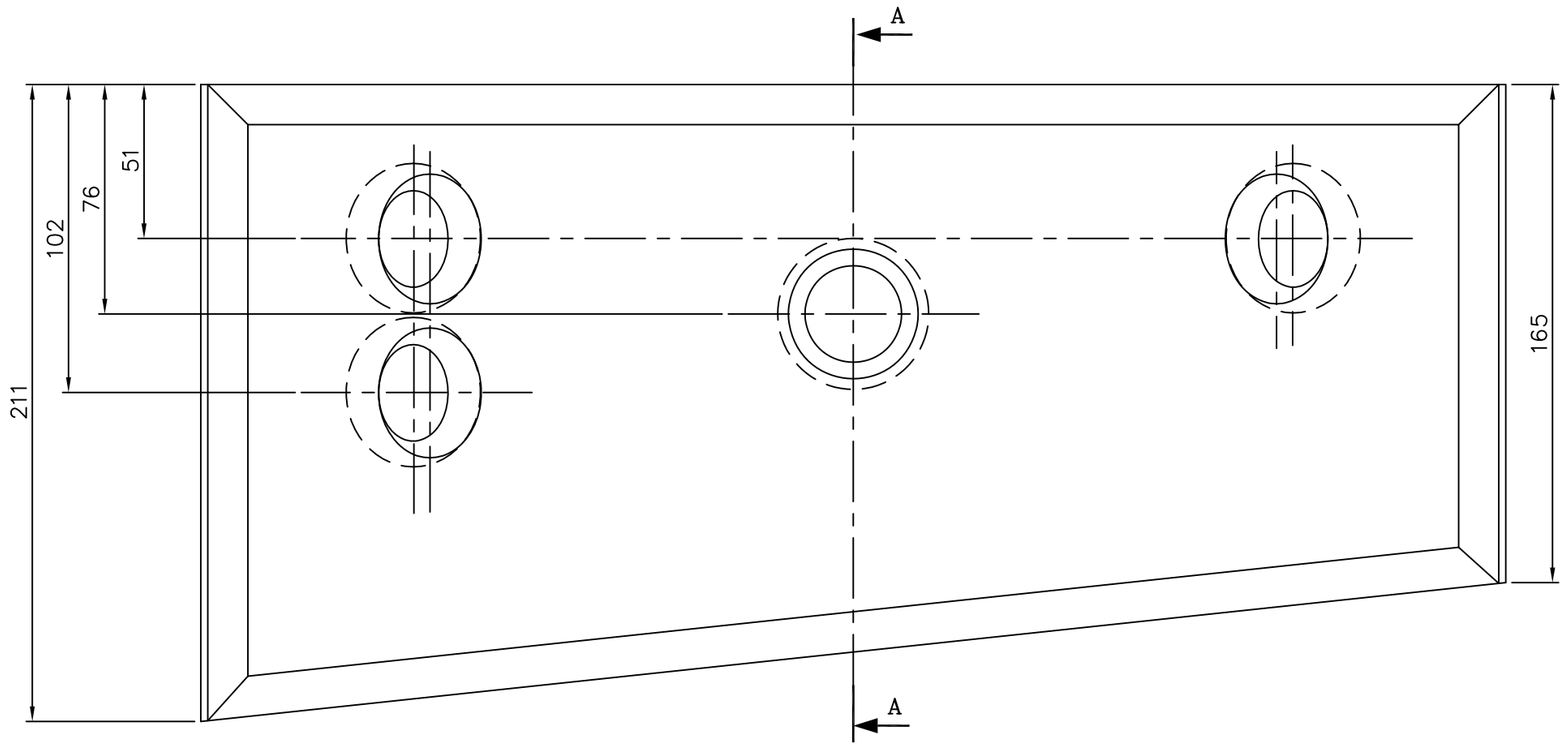

NOTES:

1. FOLLOWING INFORMATION TO BE CAST IN TO PART USING 3MM. MAX. HEIGHT LETTERS : 261304 02279
2. BREAK SHARP EDGES AND CORNERS UNLESS OTHERWISE NOTED.
3. TOLERANCES UNLESS OTHERWISE NOTED :-
   CASTING ±1.6
   ANGULAR ±0.1°

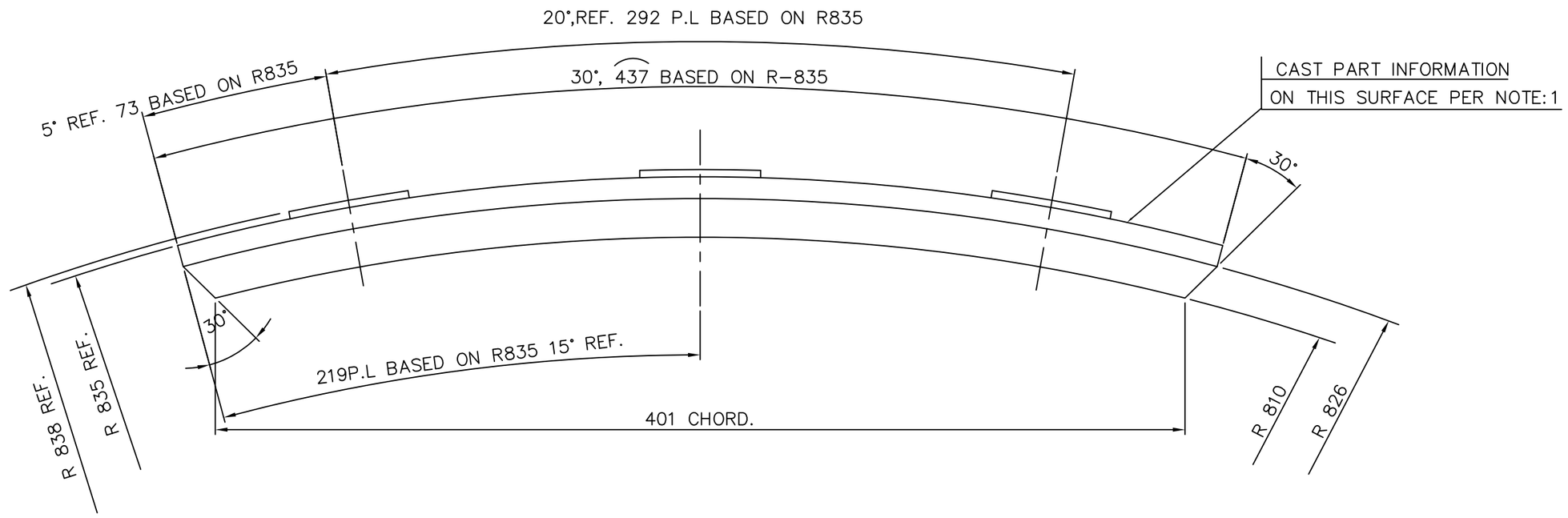

ITEM NO	DESCRIPTION	DRAWING NO.	VAR. NO.	RAW MATERIAL SIZE OR CASTING DRG.NO. OR FORGING DRG.NO.	MATERIAL CODE	NET WT.	GROSS WT.
01	CASTING				BA9114135418	16.100	
					AA19741		
					MATERIAL SPECN.	QUANTITY	

THE FOLLOWING CONDITIONS APPLY EXCEPT OTHERWISE STATED...

1. REF.TO HY0230261 FOR UNSPECIFIED TOLERANCES.
2. CHAMFER M/CD SHARP EDGES 1.2 TO 1.0 AT 45°.
3. INTERNAL M/CD CORNER RADII 1 TO 0.7.
4. THE SURFACE ROUGHNESS WHEREVER NOT SHOWN SHALL BE TAKEN FROM THE SURFACE ROUGHNESS SHOWN OUT SIDE BACK SLASHES GIVEN AT THE TOP MOST RIGHT CORNER OF THE DRG.

REV.	DATE	ALTERED	CHD/APPD
01	15.6.99	DRAWING REDRAWN IN AUTO CAD	

ZONE

TYPE OF PRODUCT OR NAME OF CUSTOMER/PROJECT: 1103 XRP BOWL MILL

BHARAT HEAVY ELECTRICALS LTD. HYDERABAD

	NAME	SIGN.	DATE	NO.OF VAR.
DRN.	C.C.S.		15.6.99	–
CHD.	E.M.A.		15.6.99	
APPD.	K.M.RAO		15.6.99	

DEPT.	UNTOL. DIMS. GR.	SCALE	WEIGHT (KG)	REF. TO ASSY. DRG.	ITEM NO.	NO.OF ITEMS
PULV	C/M/F	1:2	16.100	C-110-00805/1	–	–
CODE 446						

TITLE: JOURNAL OPENING FRAME LINER

CARD CODE: N.A.

DRAWING NO. 2-61-304-02279 REV. 01

SHT. No 01 NO. OF SHT. 01

FIRST ANGLE PROJECTION

(ALL DIMENSIONS ARE IN mm)

DRG. NO. 2-61-404-02281

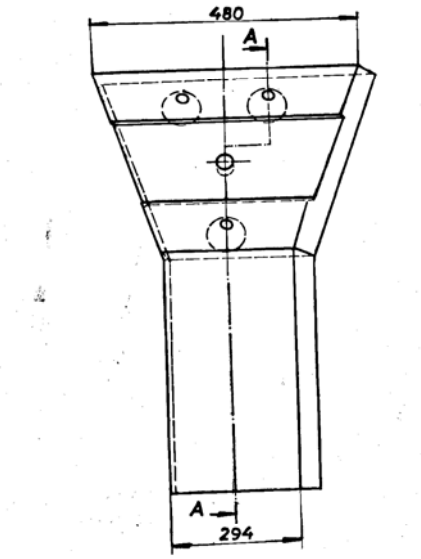

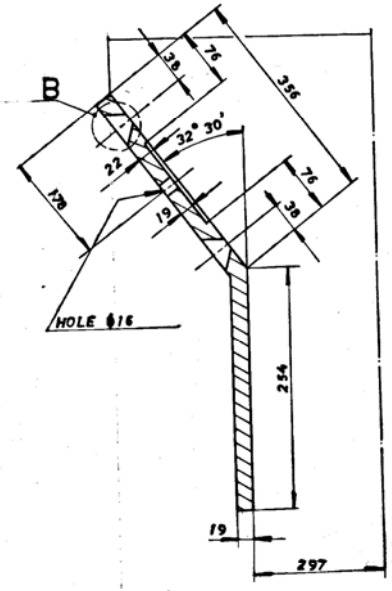

SECTION-A-A

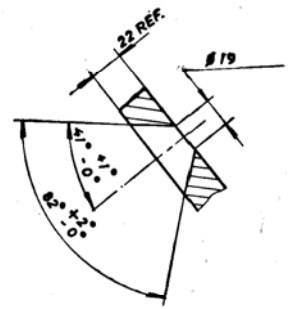

DETAIL-B

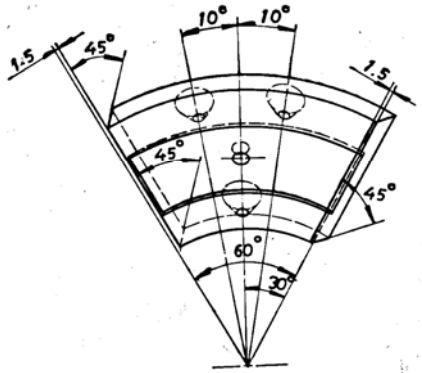

NOTES:-

1. BREAK ALL SHARP EDGES AND CORNERS UNLESS OTHERWISE NOTED.
2. TOLERANCES UNLESS OTHERWISE NOTED.
   CASTING ±1.6
   ANGULAR ± 0.1°

GENERAL DIMENSIONS LIMITS, FITS & TOLERANCES AS PER P.S-HY 0230261

VAR. CO	REMARKS	VAR. NO	ITEM NO.	DESCRIPTION	STD	DRAWING NO.
			01	CASTING		

MATL. CODE: BA9114-153610 / AA 19741
MATL. SPCN.:
UNIT WT.: 43.200
QTY.: 1

CARD TYPE-3 / CARD TYPE-2 / CARD TYPE-1

ADDITIONAL INFORMATION
STATUS OF DRAWING
DISTRIBUTION OF PRINTS

TYPE OF PRODUCT OR NAME OF CUSTOMER/PROJECT: 1043 RP BOWL MILL — CHANDRAPUR - 500 MW

BHARAT HEAVY ELECTRICALS LTD. HYDERABAD

	NAME	SIGN	DATE
DRN.	E.O.L		
CHD.	N.D.S		15-9-93
APPD.	Y.S.B.L.RAO		16/9/93

NO. OF VAR. -

DEPT. BHD CODE 446 | GRADE OF TOL. DIM. ±/M/F | SCALE N.T.S | WEIGHT (Kg) 43.200 | REF. TO ASSY. DRG. C.GP.4064/06 | ITEM NO. - | NO. OF ITEMS -

TITLE: INNER CONE SPOUT SEGMENT

CARD CODE

DRAWING NO. 2-61-304-02281 REV. 00

SHEET NO. | NO. OF SHEETS

SIZE A2

REV.	DATE	ALTERED / CHECKED	ZONE

TD-150 REV. NO. 2

THE INFORMATION ON THIS DOCUMENT IS THE PROPERTY OF BHARAT HEAVY ELECTRICALS LIMITED. IT MUST NOT BE USED DIRECTLY OR INDIRECTLY IN ANY WAY DETRIMENTAL TO THE INTEREST OF THE COMPANY.

REF. DRG. NO. | SIGN. & DATE | INVENTORY NO.

FIRST ANGLE PROJECTION

(ALL DIMENSIONS ARE IN mm)

DRG.NO. 2-61-304-02287

THE INFORMATION ON THIS DOCUMENT IS THE PROPERTY OF BHARAT HEAVY ELECTRICALS LIMITED.
IT MUST NOT BE USED DIRECTLY OR INDIRECTLY IN ANY WAY DETRIMENTAL TO THE INTEREST OF THE COMPANY.

COMP. FILE NAME 26102287.DWG

REF.DRG.NO.

INVENTORY NO.

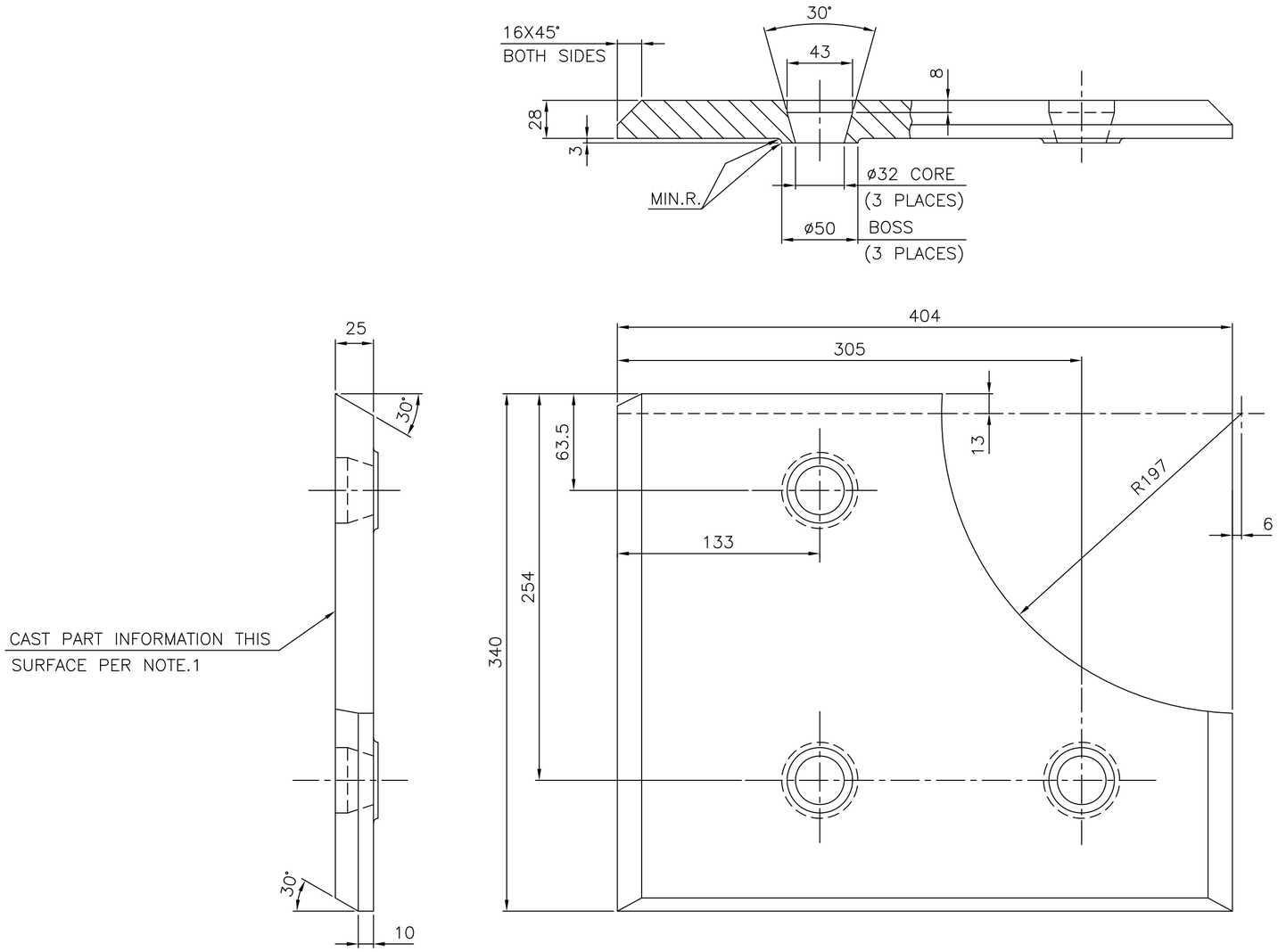

NOTES:-

01. FOLLOWING INFORMATION TO BE CAST INTO PART USING 3mm MAXIMUM LETTER HEIGHT 26130402287
02. BREAK ALL SHARP EDGES AND CORNERS UNLESS OTHERWISE NOTED.
03. TOLERANCES UNLESS OTHERWISE NOTED:-
CASTING ±1.6
ANGULAR ±0.1°

ITEM NO	DESCRIPTION	DRAWING NO.	VAR. NO.	RAW MATERIAL SIZE OR CASTING DRG.NO. OR FORGING DRG.NO.	MATERIAL CODE	NET WT.	GROSS WT.
01	CASTING				BA9114135434	21.000	
					AA19741	1	
					MATERIAL SPECN.	QUANTITY	

THE FOLLOWING CONDITIONS APPLY EXCEPT OTHERWISE STATED...

1. REF.TO HY0230261 FOR UNSPECIFIED TOLERANCES.
2. CHAMFER M/CD SHARP EDGES 1.2 TO 1.0 AT 45°.
3. INTERNAL M/CD CORNER RADII 1 TO 0.7.
4. THE SURFACE ROUGHNESS WHEREVER NOT SHOWN SHALL BE TAKEN FROM THE SURFACE ROUGHNESS SHOWN OUT SIDE BACK SLASHES GIVEN AT THE TOP MOST RIGHT CORNER OF THE DRG.

TYPE OF PRODUCT OR NAME OF CUSTOMER/PROJECT: 1043 RP. BOWL MILL

BHARAT HEAVY ELECTRICALS LTD. HYDERABAD

	NAME	SIGN.	DATE
DRN.	N.D.SAMUEL		
CHD.	S.GHATGE		22.5.99
APPD.	K.M.RAO		22.5.99

NO.OF VAR. –

DEPT.	SCALE	WEIGHT(Kg)	REF. TO ASSY DRG.	ITEM NO.	NO.OF ITEMS
PULV.ENGGE. CODE 446	N.T.S	21.000	C-110-00800/1	–	–

TITLE: JOURNAL OPENING FRAME LINER

DRAWING NO. 2-61-304-02287 REV. 01

SHEET NO. 01 NO OF SHEETS 01

REV.	DATE	ALTERED	CHECKED	APPD.
01	22.5.99	DRAWING REDRAWN		

TD-150/REV.NO.03 SIZE A2

FIRST ANGLE PROJECTION

(ALL DIMENSIONS ARE IN mm)

DRG. NO. 2-61-304-02344

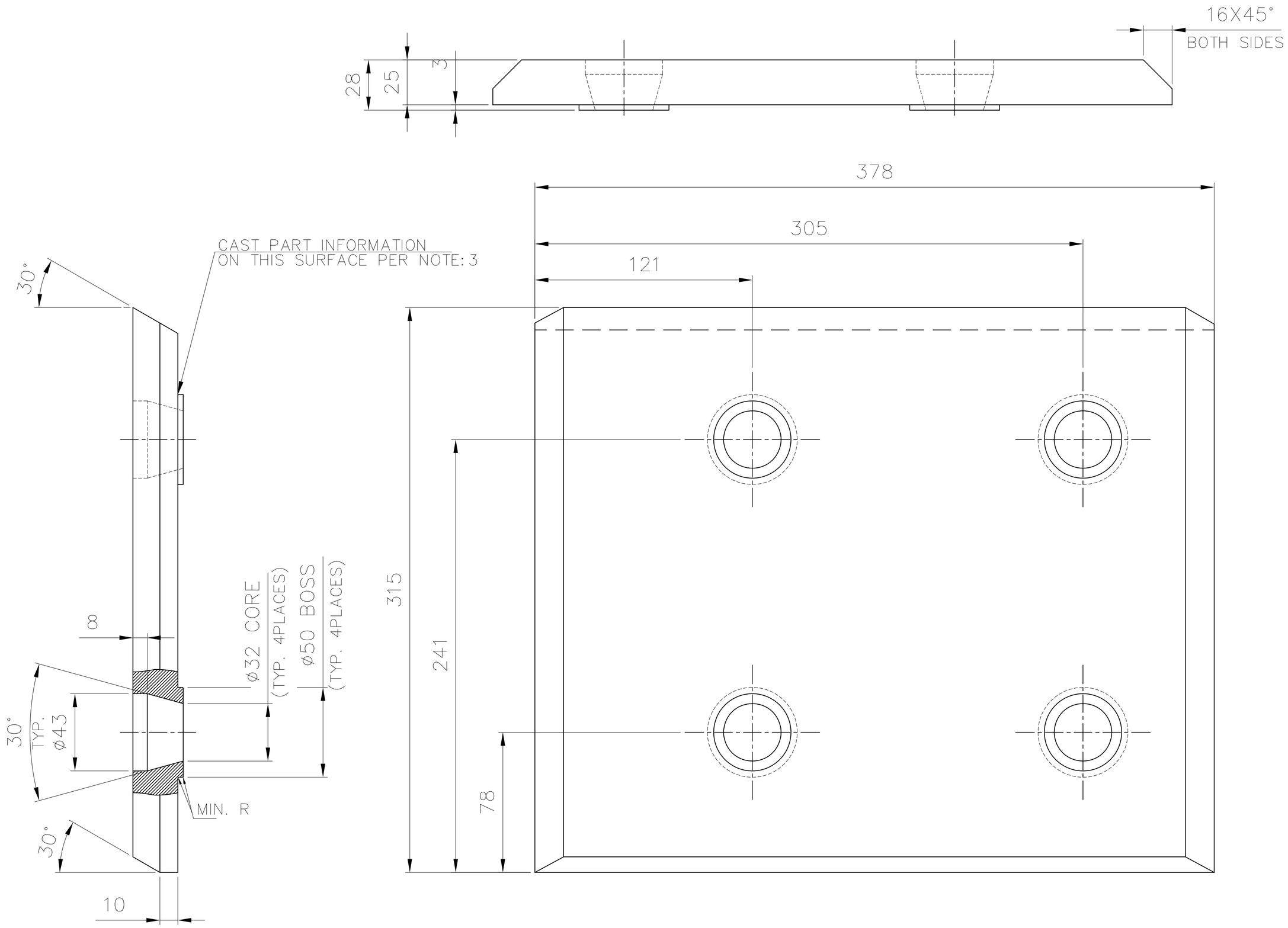

NOTES:

1. FOLLOWING INFORMATION TO BE CAST INTO PART USING 3MM MAX. HEIGHT LETTERS: 26130402344.
2. BREAK ALL SHARP EDGES AND CORNERS UNLESS OTHERWISE NOTED.
3. TOLERANCES UNLESS OTHERWISE NOTED:
   CASTING: ±1.6
   ANGULAR ±0.1°

ITEM NO.	DESCRIPTION	DRAWING NO.	VAR. NO.	RAW MATERIAL SIZE OR CASTING DRG. NO. OR FORGING DRG. NO.	MATERIAL CODE	NET WT.	GROSS WT.
01	CASTING				BA9114135540	23.00	23.00
					AA19741	1	
					MATERIAL SPECN.	QUANTITY	

THE FOLLOWING CONDITIONS APPLY EXCEPT OTHERWISE STATED.

1. REF. TO HY0230261 FOR UNSPECIFIED TOLERANCES.
2. CHAMFER M/CD. SHARP EDGES 1.2 TO 1.0 AT 45°.
3. INTERNAL M/CD. CORNER RADII 1 TO 0.7
4. THE SURFACE ROUGHNESS WHERE-EVER NOT SHOWN SHALL BE TAKEN FROM THE SURFACE ROUGHNESS SHOWN OUT SIDE THE BACK SLASH GIVEN OR THE TOP MOST RIGHT CORNER OF THE DRG.

TYPE OF PRODUCT

NAME OF CUSTOMER/PROJECT

BHARAT HEAVY ELECTRICALS LIMITED
HYDERABAD

	NAME	SIGN.	DATE	NO.OF VAR.
DRN.	EOL		15.07.93	
CHD.	N.D.S		16.07.93	
APPD.	Y.S.B.L.RAO		16.07.93	

DEPT.	UNTOL. DIMS. GR.		SCALE	WEIGHT (KG)	REF. TO ASSY DRG.	ITEM NO.	NO.OF ITEMS
PULV ENGG. CODE 446	¢/M/¢		1:2	23.00			

TITLE

JOURNAL OPENING FRAME LINER

DRAWING NO. 2-61-304-02344 REV. 01

SHEET NO. 01 NO OF SHEETS 01

REV.	DATE	ALTERED	APPD.	REV.	DATE	ALTERED	APPD.	REV.	DATE	ALTERED	APPD.
		CHD.				CHD.		01	25.02.12	BGK CHD. AMAN	SG
ZONE				ZONE				ZONE		REDRAWN TO SCALE IN AUTOCAD.	

THE INFORMATION ON THIS DOCUMENT IS THE PROPERTY OF BHARAT HEAVY ELECTRICALS LIMITED. IT MUST NOT BE USED DIRECTLY OR INDIRECTLY IN ANY WAY DETRIMENTAL TO THE INTEREST OF THE COMPANY

COMPUTER FILE NAME

REF. DRG. NO.

SIGN. AND DATE

INVENTORY NO

DFSC1

FIRST ANGLE PROJECTION

(ALL DIMENSIONS ARE IN mm)

DRG. NO. 2-61-362-00714

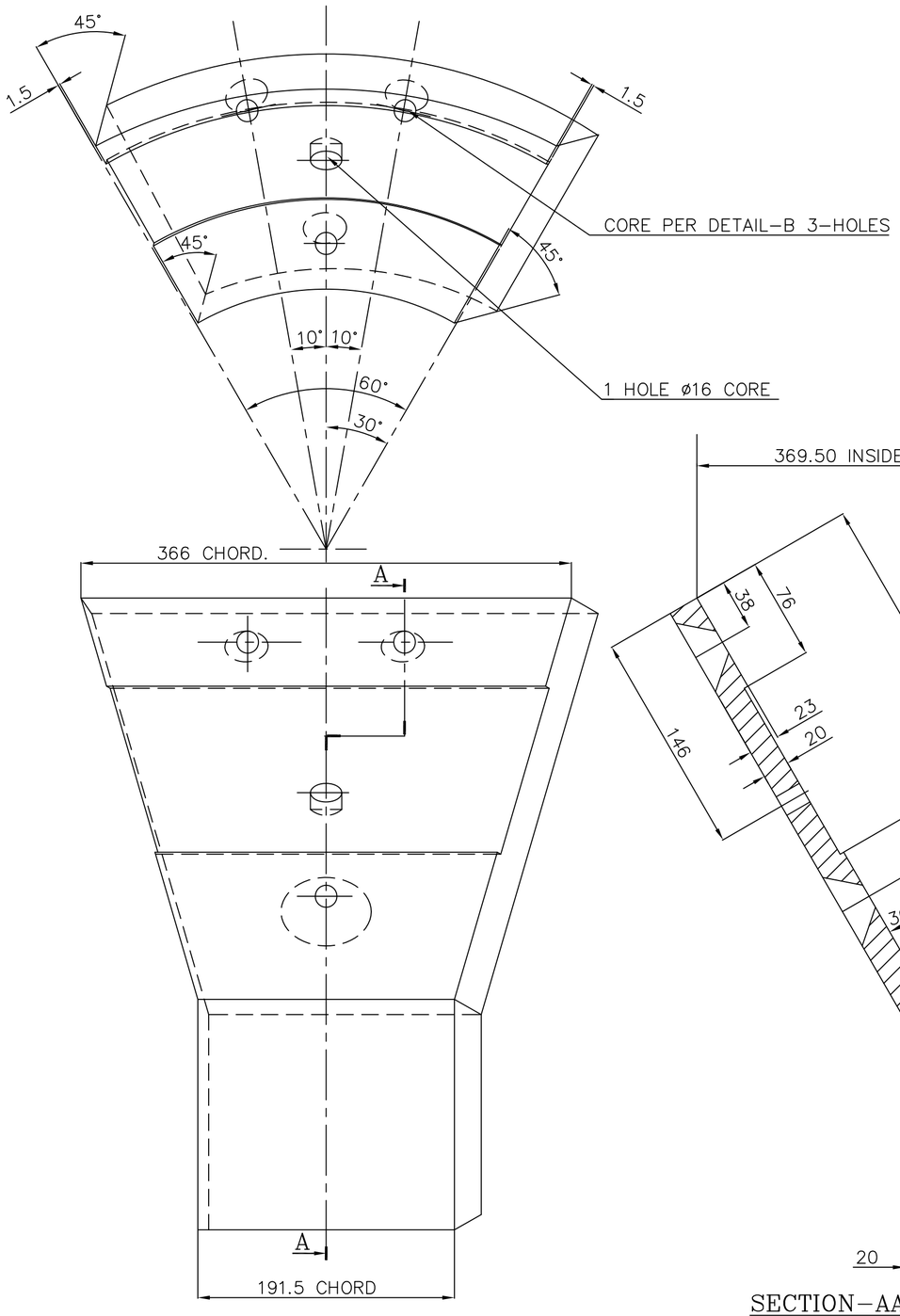

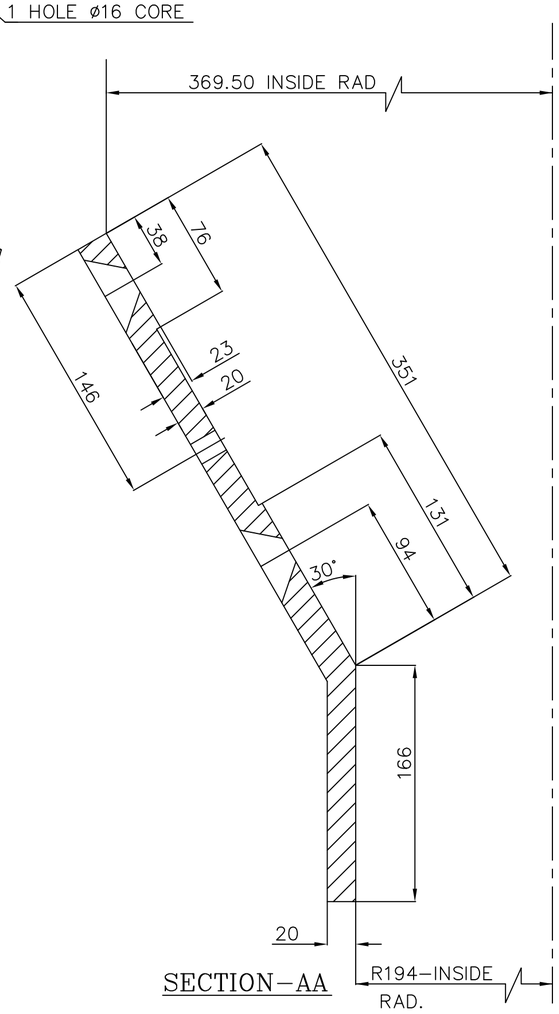

SECTION-AA

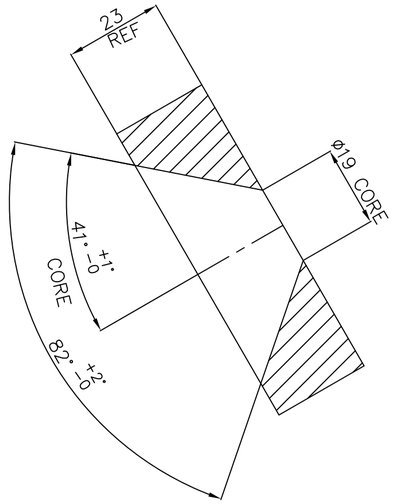

DETAIL-B

VAR-01

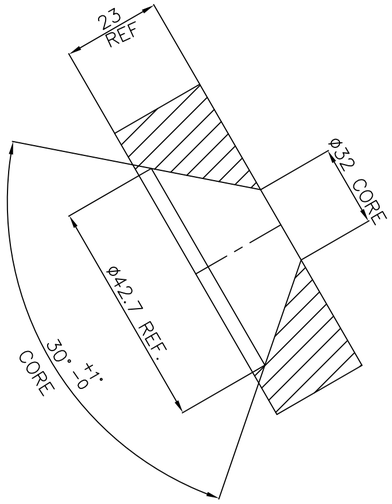

DETAIL-B

VAR-02

NOTE

1. BREAK ALL SHARP EDGES AND CORNERS UNLESS OTHERWISE NOTED,

ITEM NO.	DESCRIPTION	DRAWING NO.	VAR. NO.	RAW MATERIAL SIZE OR CASTING DRG. NO. OR FORGING DRG. NO.	MATERIAL CODE / MATERIAL SPECN.	NET WT.	GROSS WT.
01	CASTING		01		BA9114153513 / AA19741	21.8	1

THE FOLLOWING CONDITIONS APPLY EXCEPT OTHERWISE STATED.

1. REF. TO HY0230261 FOR UNSPECIFIED TOLERANCES.
2. CHAMFER M/CD. SHARP EDGES 1.2 TO 1.0 AT 45°.
3. INTERNAL M/CD. CORNER RADII 1 TO 0.7
4. THE SURFACE ROUGHNESS WHERE-EVER NOT SHOWN SHALL BE TAKEN FROM THE SURFACE ROUGHNESS SHOWN OUT SIDE THE BACK SLASH GIVEN OR THE TOP MOST RIGHT CORNER OF THE DRG.

TYPE OF PRODUCT

NAME OF CUSTOMER/PROJECT 623 XRPBM

BHARAT HEAVY ELECTRICALS LIMITED HYDERABAD

	NAME	SIGN.	DATE	NO.OF VAR.
DRN.	RAZVI		19.11.02	
CHD.	NDSAMUEL		19.11.02	
APPD.	S.GHATGE		19.11.02	

DEPT.	UNTOL. DIMS. GR.		SCALE	WEIGHT (KG)	REF. TO ASSY DRG.	ITEM NO.	NO.OF ITEMS
PULV ENGG. CODE 446	¢/M/¢		1:3	21.8	—	—	—

TITLE INNER CONE SPOUT SEGMENT

DRAWING NO. 2-61-362-00714 REV. 03.A

SHEET NO. 01 NO OF SHEETS 01

REV.	DATE	ALTERED	CHD.	APPD.	ZONE	
03.A	08.03.06	PKP	CKP	V.KR.		VAR. ADDED FOR DET-B NOTE-2 ADDED
03	19.11.03	CNY	NDS	SG		WEIGHT WAS 94.4
02	19.11.02	CNY	NDS	SG		DRAWING REDRAWN ON AUTOCAD.

THE INFORMATION ON THIS DOCUMENT IS THE PROPERTY OF BHARAT HEAVY ELECTRICALS LIMITED. IT MUST NOT BE USED DIRECTLY OR INDIRECTLY IN ANY WAY DETRIMENTAL TO THE INTEREST OF THE COMPANY

COMPUTER FILE NAME | REF. DRG. NO. | SIGN. AND DATE | INVENTORY NO

FIRST ANGLE PROJECTION

(ALL DIMENSIONS ARE IN mm)

POORNIMA CAD

DRG.NO. 2-61-362-00715

THE INFORMATION ON THIS DOCUMENT IS THE PROPERTY OF BHARAT HEAVY ELECTRICALS LIMITED.
IT MUST NOT BE USED DIRECTLY OR INDIRECTLY IN ANY WAY DETRIMENTAL TO THE INTEREST OF THE COMPANY.

COMP. FILE NAME 26100715.DWG

REF.DRG.NO.

INVENTORY NO.

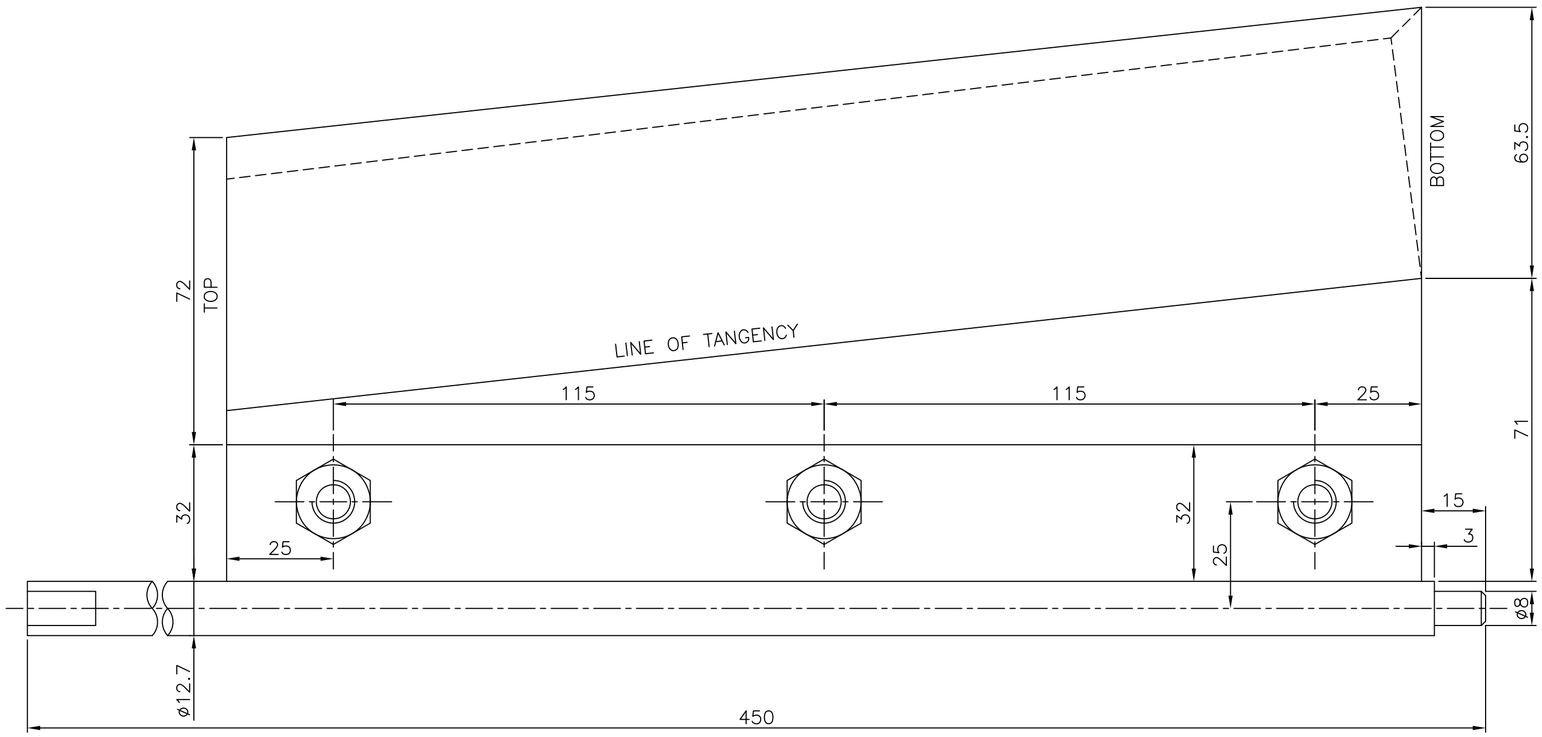

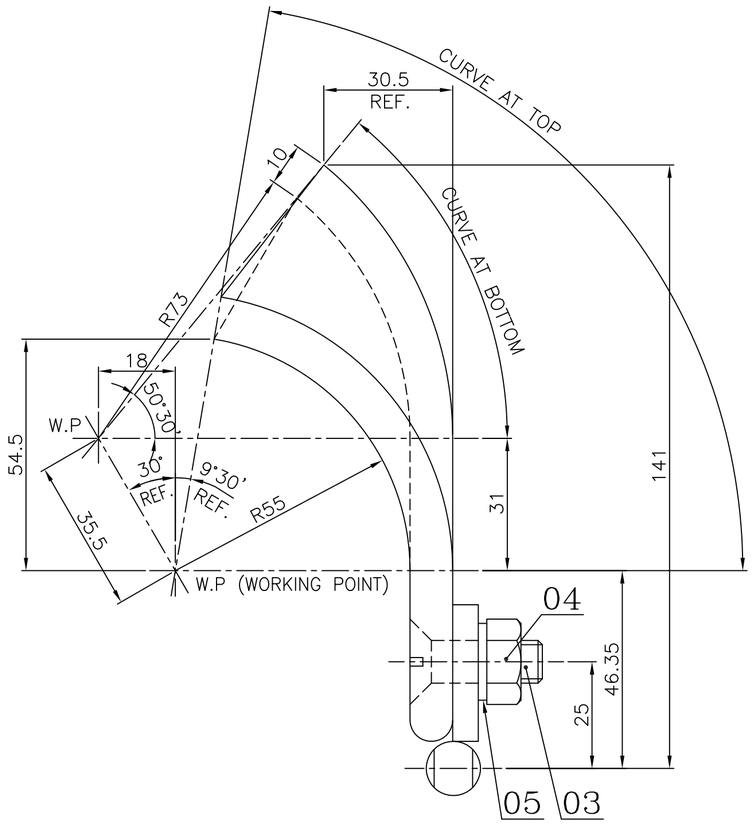

ITEM NO	DESCRIPTION	DRAWING NO.	VAR. NO.	RAW MATERIAL SIZE OR CASTING DRG.NO. OR FORGING DRG.NO.	MATERIAL CODE / MATERIAL SPECN.	NET WT. / QUANTITY	GROSS WT.
05	SPRING WASHER	41405-10000		M10	41405-00010	0.010	
						3	
04	HEX. NUT	41320-10000		M10	41320-00010	0.010	
						3	
03	CSK HD. SCREW	41205-10030		M10x30	41205-10030	0.020	
						3	
02	DEFLECTOR BLADE (CASTING)	2-BM-362-00003			41205-10030	2.900	
					NI-HARD	1	
01	DEFLECTOR HINGED SHAFT	3-61-362-00653				0.860	
					WELDMENT	1	

THE FOLLOWING CONDITIONS APPLY EXCEPT OTHERWISE STATED...

1. REF.TO HY0230261 FOR UNSPECIFIED TOLERANCES.
2. CHAMFER M/CD SHARP EDGES 1.2 TO 1.0 AT 45°.
3. INTERNAL M/CD CORNER RADII 1 TO 0.7.
4. THE SURFACE ROUGHNESS WHEREVER NOT SHOWN SHALL BE TAKEN FROM THE SURFACE ROUGHNESS SHOWN OUT SIDE BACK SLASHES GIVEN AT THE TOP MOST RIGHT CORNER OF THE DRG.

TYPE OF PRODUCT
OR
NAME OF CUSTOMER/PROJECT

BHARAT HEAVY ELECTRICALS LTD.
HYDERABAD

	NAME	SIGN.	DATE	NO.OF VAR.
DRN.	POORNIMA		06.12.85	NA
CHD.			28.12.85	
APPD.			28.12.85	

DEPT.	PULV-ENGG	SCALE	WEIGHT(Kg)	REF. TO ASSY DRG.	ITEM NO.	NO.OF ITEMS
CODE	4460	1:1	3.880	NA	NA	NA

TITLE
DEFLECTOR ASSEMBLY

DRAWING NO. 2-61-362-00715 REV. 01

SHEET NO. 01 NO OF SHEETS 01

REV.	DATE	ALTERED	CHECKED	APPD.
01	28.06.04	DRAWING IS REDRAWN ON ACAD		

ZONE

TD-150/REV.NO.03 SIZE A2

FIRST ANGLE PROJECTION

(ALL DIMENSIONS ARE IN mm)

DRG. NO. 2-61-370-00880 SH. 01 OF 01

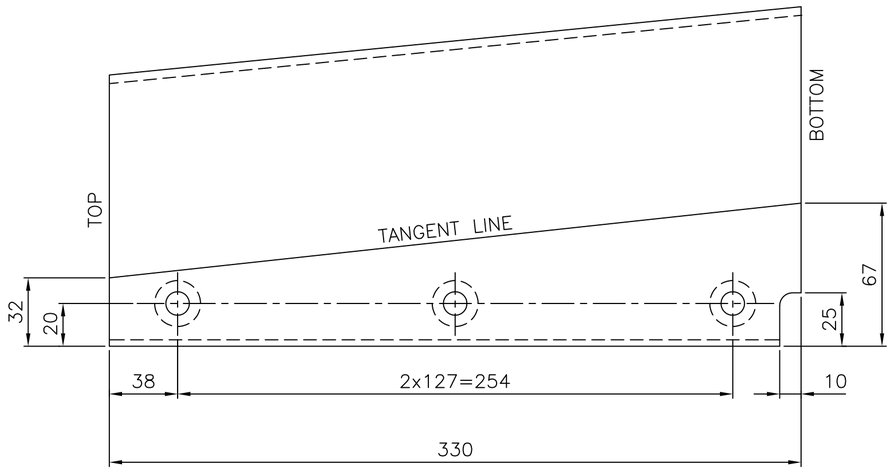

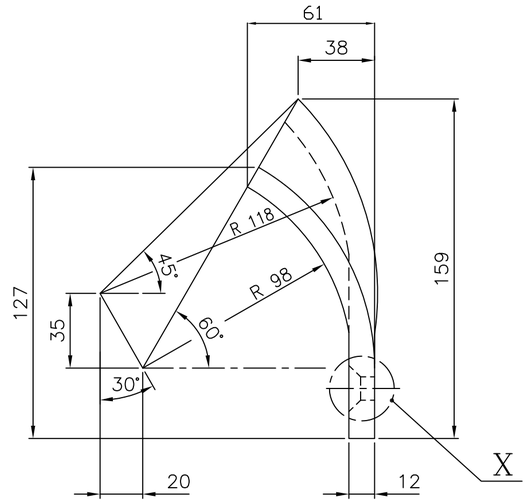

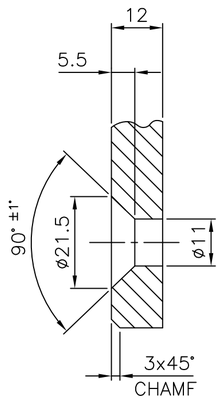

DETAIL–X

SCALE 1:1

NOTES:–

~~01. MATERIAL:– ALLOY CASTING CE CROWN 700.~~

02. PATTERN No. 2–61–370–00880.

03. BREAK ALL SHARP EDGES AND CORNERS UNLESS OTHERWISE SPECIFIED.

ITEM NO.	DESCRIPTION	DRAWING NO.	VAR. NO.	RAW MATERIAL SIZE OR CASTING DRG. NO. OR FORGING DRG. NO.	MATERIAL CODE / MATERIAL SPECN.	NET WT.	GROSS WT.
	CASTING				BA9114103052 / AA19741	5.000	

THE FOLLOWING CONDITIONS APPLY EXCEPT OTHERWISE STATED.

1. REF. TO HY0230261 FOR UNSPECIFIED TOLERANCES.
2. CHAMFER M/CD. SHARP EDGES 1.2 TO 1.0 AT 45°.
3. INTERNAL M/CD. CORNER RADII 1 TO 0.7
4. THE SURFACE ROUGHNESS WHERE–EVER NOT SHOWN SHALL BE TAKEN FROM THE SURFACE ROUGHNESS SHOWN OUT SIDE THE BACK SLASH GIVEN ON THE TOP MOST RIGHT CORNER OF THE DRG.

TYPE OF PRODUCT

NAME OF CUSTOMER/PROJECT

BHARAT HEAVY ELECTRICALS LIMITED
HYDERABAD

	NAME	SIGN.	DATE	NO.OF VAR.
DRN.	UNIC		20.02.97	/
CHD.	B.M.R		08.10.97	
APPD.			08.10.97	

DEPT. PULV ENGG CODE 446 | UNTOL. DIMS. GR. ¢/M/F | SCALE 1:2 1:1 | WEIGHT (KG) 5.000 | REF. TO ASSY DRG. C–GP–3500/01 | ITEM NO. / | NO.OF ITEMS /

TITLE: DEFLECTOR BLADE

CARD CODE UD–1 | DRAWING NO. 2–61–370–00880 | REV. 03

SHEET NO. 01 | NO OF SHEETS 01

REV.	DATE	ALTERED	APPD.	REV.	DATE	ALTERED	APPD.	REV.	DATE	ALTERED	APPD.
		CHD.				CHD.		03	20.02.97	UC CHD.	
ZONE				ZONE				ZONE	DRAWING REDRAWN BY INCORPORATING ALL PREVIOUS REV. NOTE 01 DELETED. DIM 61 WAS 56.		

THE INFORMATION ON THIS DOCUMENT IS THE PROPERTY OF BHARAT HEAVY ELECTRICALS LIMITED. IT MUST NOT BE USED DIRECTLY OR INDIRECTLY IN ANY WAY DETRIMENTAL TO THE INTEREST OF THE COMPANY

COMPUTER FILE NAME 26100880.DWG

REF. DRG. NO. C–GP–3500/1

GENERAL DIMENSIONAL LIMITS,FITS & TOLERANCES AS PER HY0230261

SIGN. AND DATE

INVENTORY NO

FIRST ANGLE PROJECTION (ALL DIMENSIONS IN MILLIMETRES)

DRAWING NO 2-61-376-00706

CAUTION THE INFORMATION ON THIS DOCUMENT IS THE PROPERTY OF BHARAT HEAVY ELECTRICALS LTD. IT MUST NOT BE USED DIRECTLY OR INDIRECTLY IN ANY WAY DETRIMENTAL TO THE INTEREST OF THE COMPANY.

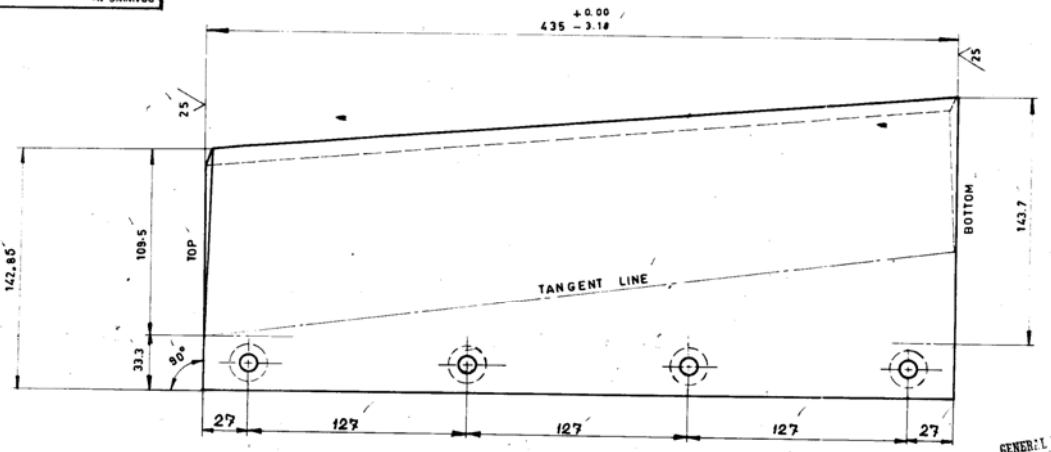

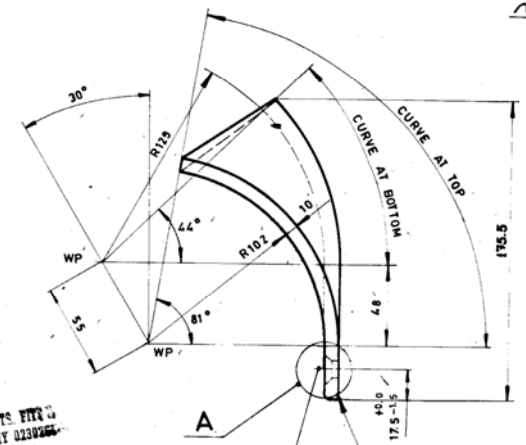

GENERAL DIMENSIONS, LIMITS, FITS & TOLERANCES AS PER IS. BY 0230/1981.

4 CORED CSK HOLES AS SHOWN IN DETAIL - 'A'

ENSURE THE FLATNESS ON THE STRAIGHT PORTION ON THE CASTING

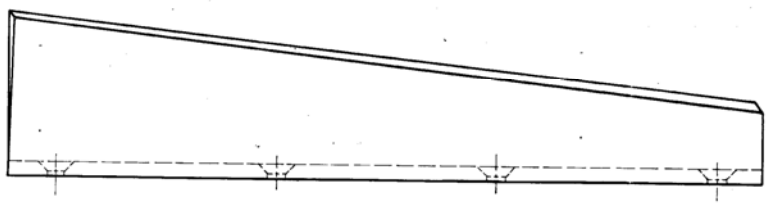

NOTE :-
BREAK ALL SHARP EDGES AND CORNERS UNLESS OTHERWISE NOTED.

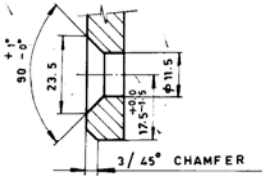

DETAIL - A

VARIANT NO.	ITEM NO.	DESCRIPTION	BOM	DRAWING NO.	ITEM NO. / VAR NO.	MATL CODE / MATL SPEC	A C	UNIT	UNIT WT / QTY		ZONE
		DEFLECTOR BLADE				BA9114103028 / AA19747			6.20		

REF. DRG 2-61-376-00039

REV	DATE	
01	25-9-86	APPROVED. ALTERED S. SHANKAR CHECKED MAT. SPEC. WAS NIHARD. MAT. CODE ADDED.

ZONE B1

TYPE OF PRODUCT OR NAME OF CUSTOMER/PROJECT

Bharat Heavy Electricals Ltd., BOILER PLANT UNIT TIRUCHIRAPALLI-620 014

	NAME	SIGN	DATE
DRN	EC-002/WM		29-11-85
CHD	T.SOOSAIMUTHU		29-11-85
APPD	K.SIVARAMAN		29.11.85

DEPT MILLS | CODE 240 | GRADE OF UNTOL. DIM C/M/P | SCALE 1:2 1:1 | WEIGHT (kg) 6.200 | REF TO ASSY / OLD DRG 2-61-176-00357 | ITEM NO. 02

TITLE DEFLECTOR BLADE | CARD CODE U 01 | DRAWING NO. 2-61-376-00706 | REV 01

CORE CODE NO 61380186

EC-002 Size A2

FIRST ANGLE PROJECTION

(ALL DIMENSIONS ARE IN mm)

C.C.S.

DRG. NO. 2-61-388-02031

SH. OF

THE INFORMATION ON THIS DOCUMENT IS THE PROPERTY OF BHARAT HEAVY ELECTRICALS LIMITED. IT MUST NOT BE USED DIRECTLY OR INDIRECTLY IN ANY WAY DETRIMENTAL TO THE INTEREST OF THE COMPANY

COMPUTER FILE NAME 26882031.DWG

REF. DRG. NO.

SIGN. AND DATE

INVENTORY NO

GENERAL DIMENSIONAL LIMITS, FITS & TOLERANCES AS PER HY0230261

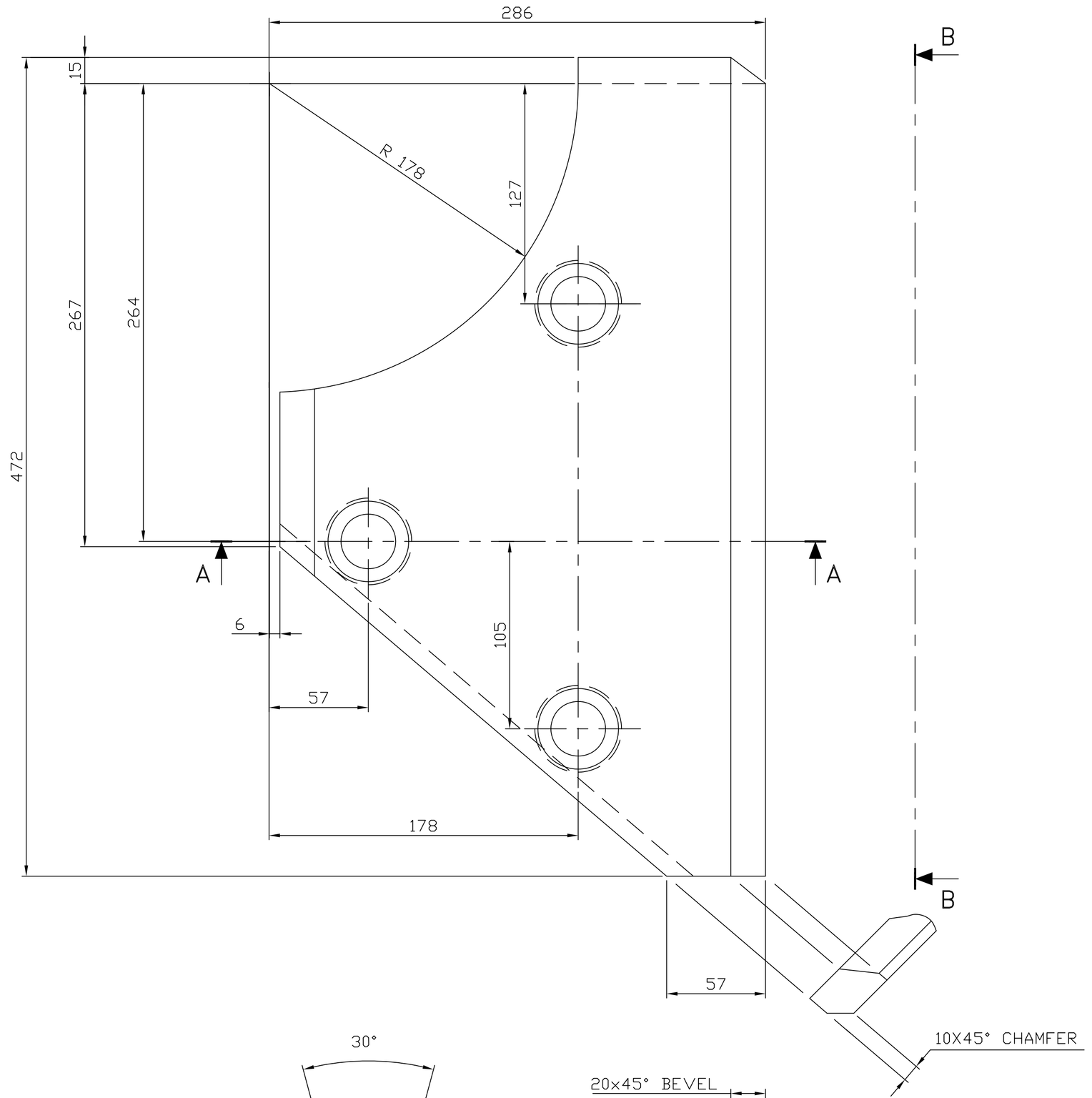

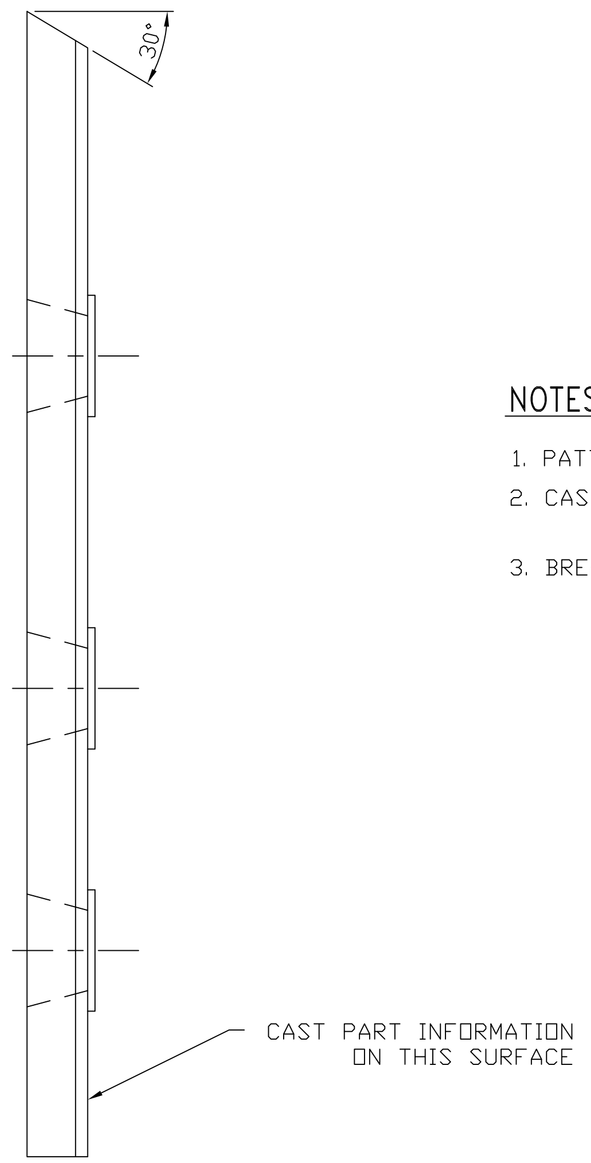

VIEW B-B

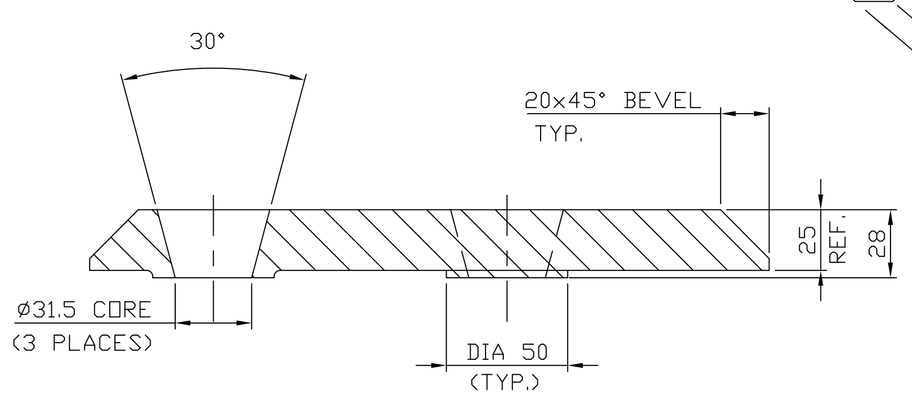

SECTION A-A

NOTES:-

1. PATTERN No. 2-61-388-02031.
2. CASTING TOL. SHOULD BE WITHIN $^{+0.0}_{-1.6}$
   ANGULAR 0° 6′
3. BREAK ALL SHARP EDGES & CORNERS UNLESS OTHERWISE NOTED.

ITEM NO	DESCRIPTION	DRAWING NO.	VAR. NO.	MATERIAL CODE / MATERIAL SPECN.	NET WT.	GROSS WT.
	CASTING			BA9114134586 / AA 19741	18.000	
					QUANTITY 1	

THE FOLLOWING CONDITIONS APPLY EXCEPT OTHERWISE STATED...

1. REF.TO HY0230261 FOR UNSPECIFIED TOLERANCES.
2. CHAMFER M/CD SHARP EDGES 1.2 TO 1.0 AT 45°.
3. INTERNAL M/CD CORNER RADII 1 TO 0.7.
4. THE SURFACE ROUGHNESS WHEREVER NOT SHOWN SHALL BE TAKEN FROM THE SURFACE ROUGHNESS SHOWN OUT SIDE BACK SLASHES GIVEN AT THE TOP MOST RIGHT CORNER OF THE DRG.

TYPE OF PRODUCT OR NAME OF CUSTOMER/PROJECT: 883 XRP BOWL MILL

BHARAT HEAVY ELECTRICALS LTD. HYDERABAD

	NAME	SIGN.	DATE	NO.OF VAR.
DRN.	E.O.L.		1.10.98	
CHD.	G.S.N.M.R		20.10.03	
APPD.				

DEPT.	UNTOL. DIMS. GR.	SCALE	WEIGHT (KG)	REF. TO ASSY. DRG.	ITEM NO.	NO.OF ITEMS
BMD	~~B/M/F~~	N.T.S.	18.000	2-61-388-02109	1	15
CODE 446						

TITLE: JOURNAL OPENING FRAME LINER-I

CARD CODE: N.A.

DRAWING NO. 2-61-388-02031 REV. 01

SHT. No 01 NO. OF SHT. 01

REV.	DATE	ALTERED	CHD/APPD
01	1.10.98	E.O.L.	G.S.N.M.R

ZONE

DRAWING REDRAWN ON AUTO CAD

FIRST ANGLE PROJECTION

(ALL DIMENSIONS ARE IN mm)

BSES

DRG.NO. 2-61-388-02033

THE INFORMATION ON THIS DOCUMENT IS THE PROPERTY OF BHARAT HEAVY ELECTRICALS LIMITED.
IT MUST NOT BE USED DIRECTLY OR INDIRECTLY IN ANY WAY DETRIMENTAL TO THE INTEREST OF THE COMPANY.

COMP. FILE NAME: 26102033.DWG

REF.DRG.NO. IC-94-1191/0

INVENTORY NO.

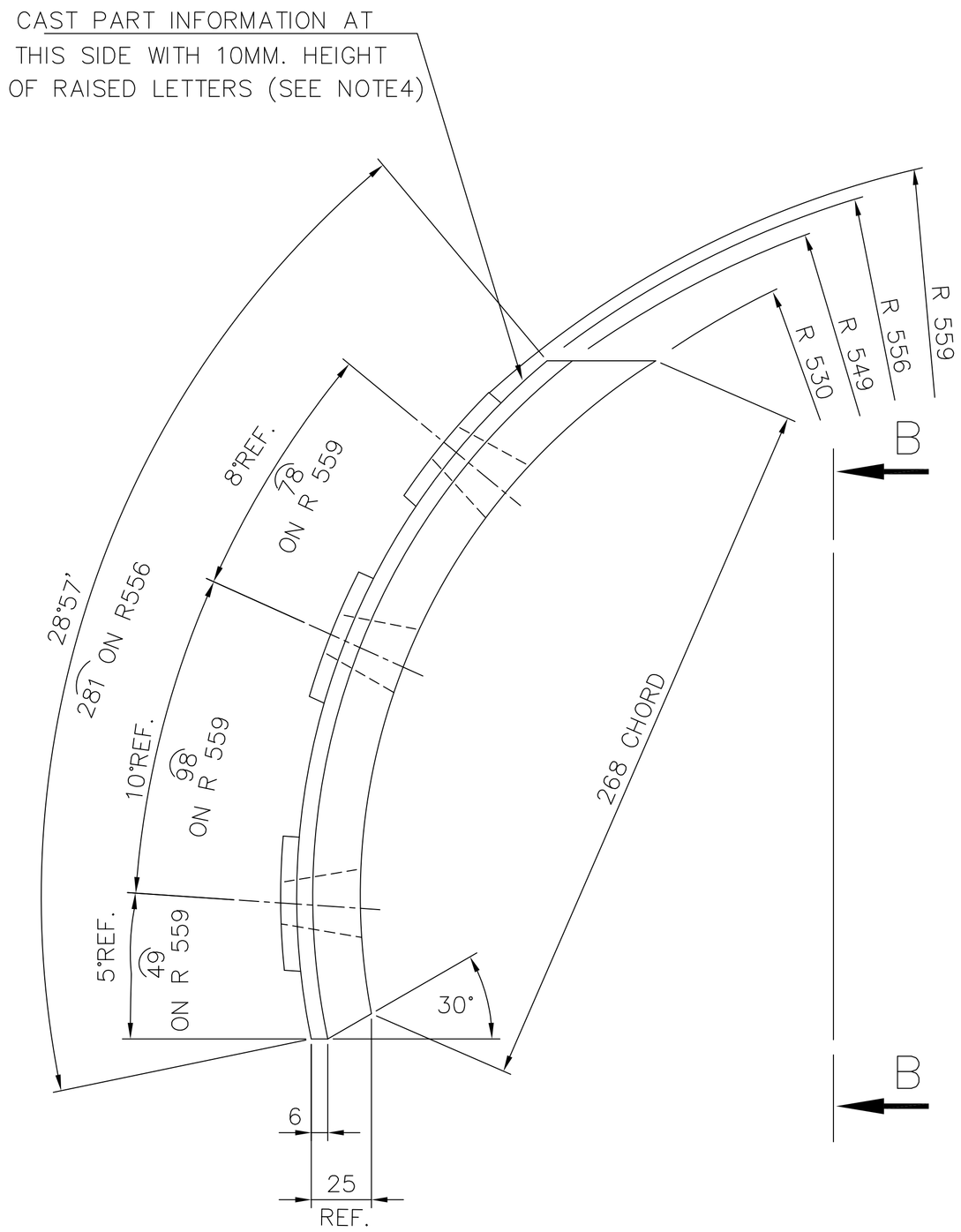

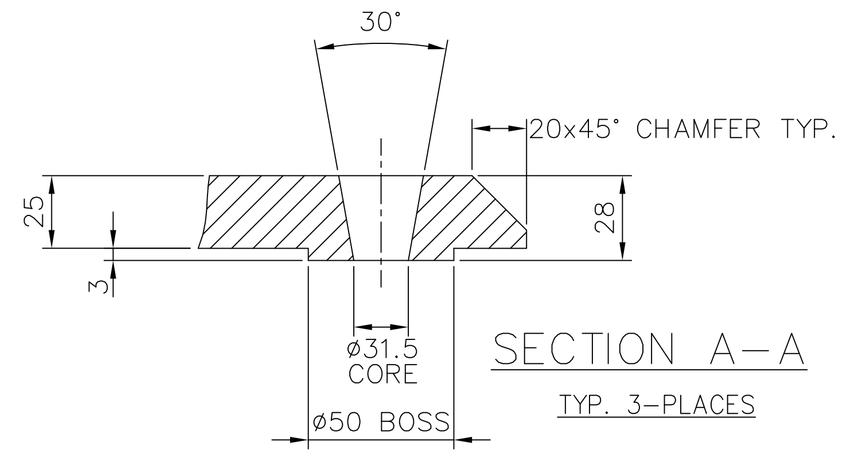

SECTION A–A

TYP. 3-PLACES

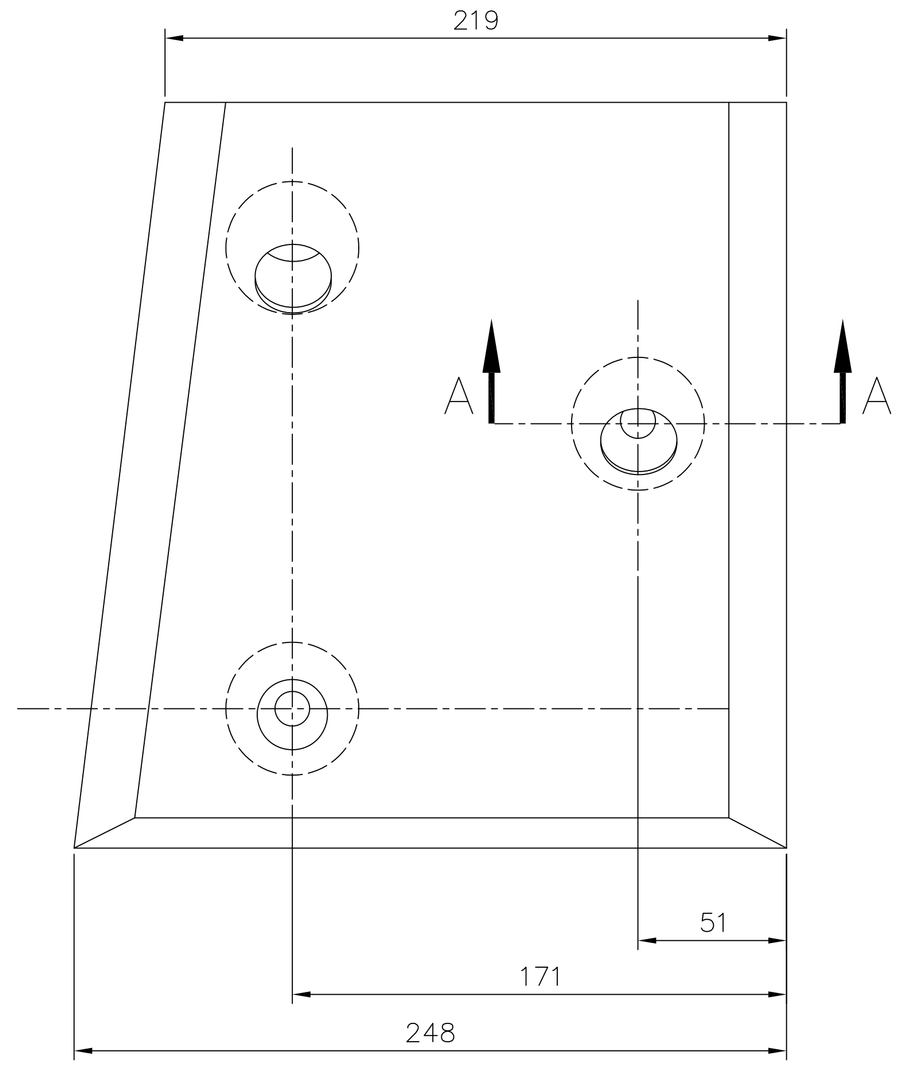

VIEW B–B

NOTE: –

1. ALL RADII TO BE 1.5 UNLESS OTHERWISE SPECIFIED.
2. CASTING TOL. SHOULD BE WITHIN $^{+0.0}_{-1.6}$
   ANGULAR 0°6'
3. PATTERN NO. 2-61-388-02033
4. CAST PART INFORMATION(VENDOR NAME,MELT NO.,HEAT NO., DRAWING NO.)ON THIS SURFACE

SNO.	DESCRIPTION	DESIGNATION	QTY.	RAW MATERIAL SIZE OR CASTING DRG.NO. OR FORGING DRG.NO.	REMARKS	NET WT.	GROSS WT.
01	CASTING			BA9114134608		11.00	000
				AA 19741		1	
						QUANTITY	

THE FOLLOWING CONDITIONS APPLY EXCEPT OTHERWISE STATED...

1. REF.TO HY0230261 FOR UNSPECIFIED TOLERANCES.
2. CHAMFER M/CD SHARP EDGES 1.2 TO 1.0 AT 45°.
3. INTERNAL M/CD CORNER RADII 1 TO 0.7.
4. THE SURFACE ROUGHNESS WHEREVER NOT SHOWN SHALL BE TAKEN FROM THE SURFACE ROUGHNESS SHOWN OUT SIDE BACK SLASHES GIVEN AT THE TOP MOST RIGHT CORNER OF THE DRG.

TYPE OF PRODUCT OR NAME OF CUSTOMER/PROJECT: 883 XRP BOWL MILL

BHARAT HEAVY ELECTRICALS LTD. HYDERABAD

	NAME	SIGN.	DATE	NO.OF VAR.
DRN.	B.S.E.S		18.10.98	
CHD.	G.S.N.M.R		15.10.03	
APPD.				

DEPT.	DRADE OF UNTOL.DIM.	SCALE	WEIGHT(Kg)	REF. TO ASSY DRG.	ITEM NO.	NO.OF ITEMS
BMD		N.T.S.	11.00	2.61.388.02109	4	15
CODE 446	∅ M ∡					

TITLE: JOURNAL OPENING FRAME LINER – IV

DRAWING NO. 2 61 388 02033 REV. 01

SHEET NO. 01 NO OF SHEETS 01

REV.	DATE	ALTERED	CHECKED	APPD.
01	18.10.98	B.S.E.S	G.M.R	

ZONE

DRG. REDRAWN ON AUTO CAD

TD-150/REV.NO.03 SIZE A2

FIRST ANGLE PROJECTION

(ALL DIMENSIONS ARE IN mm)

BSES

DRG.NO. 2-61-388-02034

THE INFORMATION ON THIS DOCUMENT IS THE PROPERTY OF BHARAT HEAVY ELECTRICALS LIMITED.
IT MUST NOT BE USED DIRECTLY OR INDIRECTLY IN ANY WAY DETRIMENTAL TO THE INTEREST OF THE COMPANY.

COMP. FILE NAME 26102034.DWG

REF.DRG.NO. C-94-1192/0

INVENTORY NO.

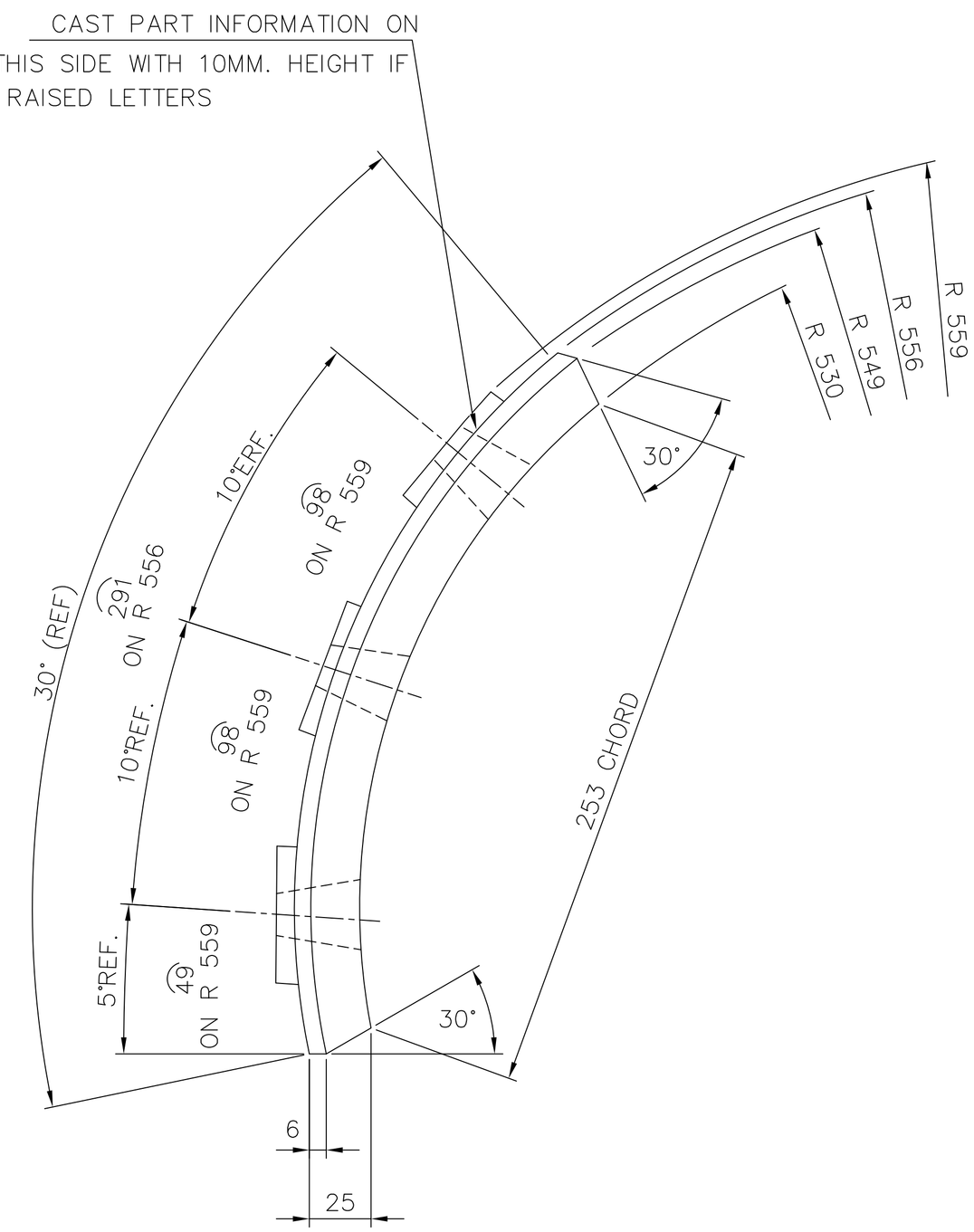

VIEW B-B

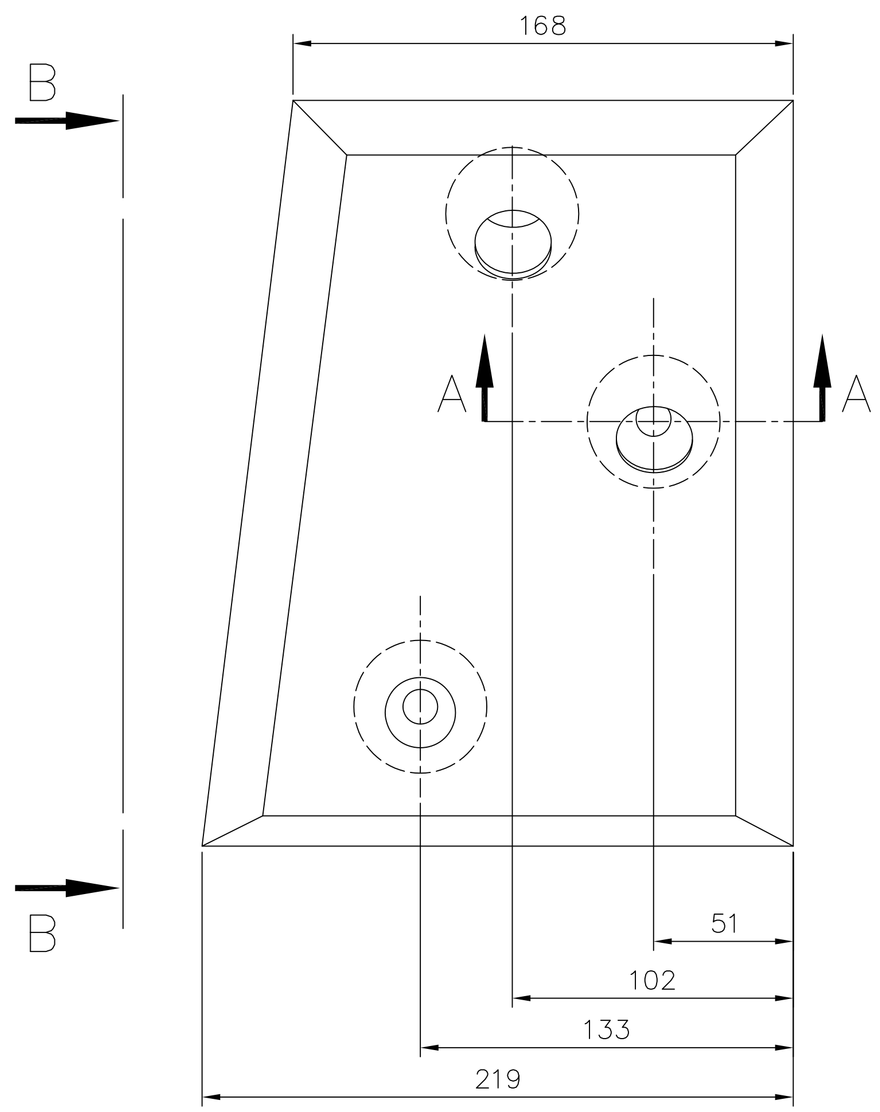

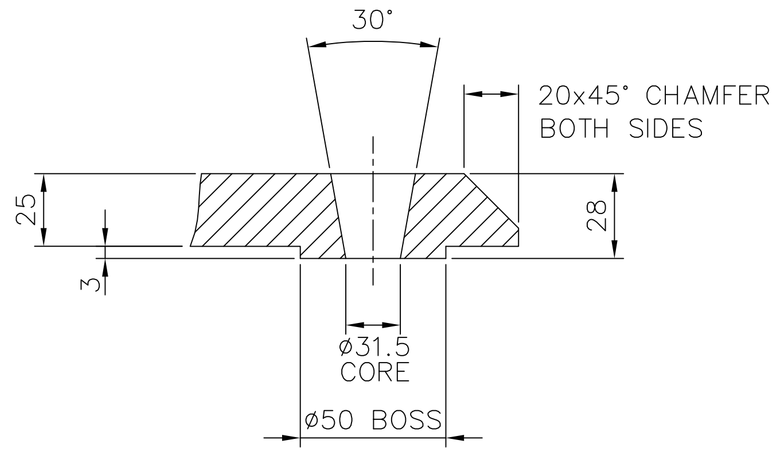

SECTION A-A

TYP. 3-PLACES

NOTE:-

1. ALL RADII TO BE 1.5 UNLESS OTHERWISE SPECIFIED.
2. CASTING TOL. SHOULD BE WITHIN $^{+0.0}_{-1.6}$
   ANGULAR 0°6'
3. PATTERN NO. 2-61-388-02034
4. CAST PART INFORMATION (VENDORNAME,HEAT NO, MELTING NO,DRG NO,)ON THIS SURFACE.

SNO.	DESCRIPTION	DESIGNATION	QTY.	RAW MATERIAL SIZE OR CASTING DRG.NO. OR FORGING DRG.NO.	REMARKS	NET WT.	GROSS WT.
	CASTING			BA9114134616		10.0	
				AA 19741			

QUANTITY

THE FOLLOWING CONDITIONS APPLY EXCEPT OTHERWISE STATED...

1. REF.TO HY0230261 FOR UNSPECIFIED TOLERANCES.
2. CHAMFER M/CD SHARP EDGES 1.2 TO 1.0 AT 45°.
3. INTERNAL M/CD CORNER RADII 1 TO 0.7.
4. THE SURFACE ROUGHNESS WHEREVER NOT SHOWN SHALL BE TAKEN FROM THE SURFACE ROUGHNESS SHOWN OUT SIDE BACK SLASHES GIVEN AT THE TOP MOST RIGHT CORNER OF THE DRG.

TYPE OF PRODUCT OR NAME OF CUSTOMER/PROJECT: 883 XRP BOWL MILL

BHARAT HEAVY ELECTRICALS LTD. HYDERABAD

	NAME	SIGN.	DATE	NO.OF VAR.
DRN.	B.S.E.S		18.10.98	
CHD.	G.M.R		15.10.03	
APPD.				

DEPT.	DRADE OF UNTOL.DIM.	SCALE	WEIGHT(Kg)	REF. TO ASSY DRG.	ITEM NO.	NO.OF ITEMS
BMD CODE 446	℄ M ⊄	N.T.S.	10.0	2.61.388.02109	5	15

TITLE: JOURNAL OPENING FRAME LINER - V

DRAWING NO. 2.61.388.02034 REV. 01

SHEET NO. NO OF SHEETS

REV.	DATE	ALTERED	CHECKED	APPD.	ZONE
		ALTERED B.S.E.S	CHECKED GMR	APPD.	
01	18/10/98	ALTERED DRG. REDRAWN ON AUTOCAD	CHECKED	APPD.	

TD-150/REV.NO.03 SIZE A2

FIRST ANGLE PROJECTION

(ALL DIMENSIONS ARE IN mm)

M.E.S

DRG. NO. 2-61-400-00555

SH. OF

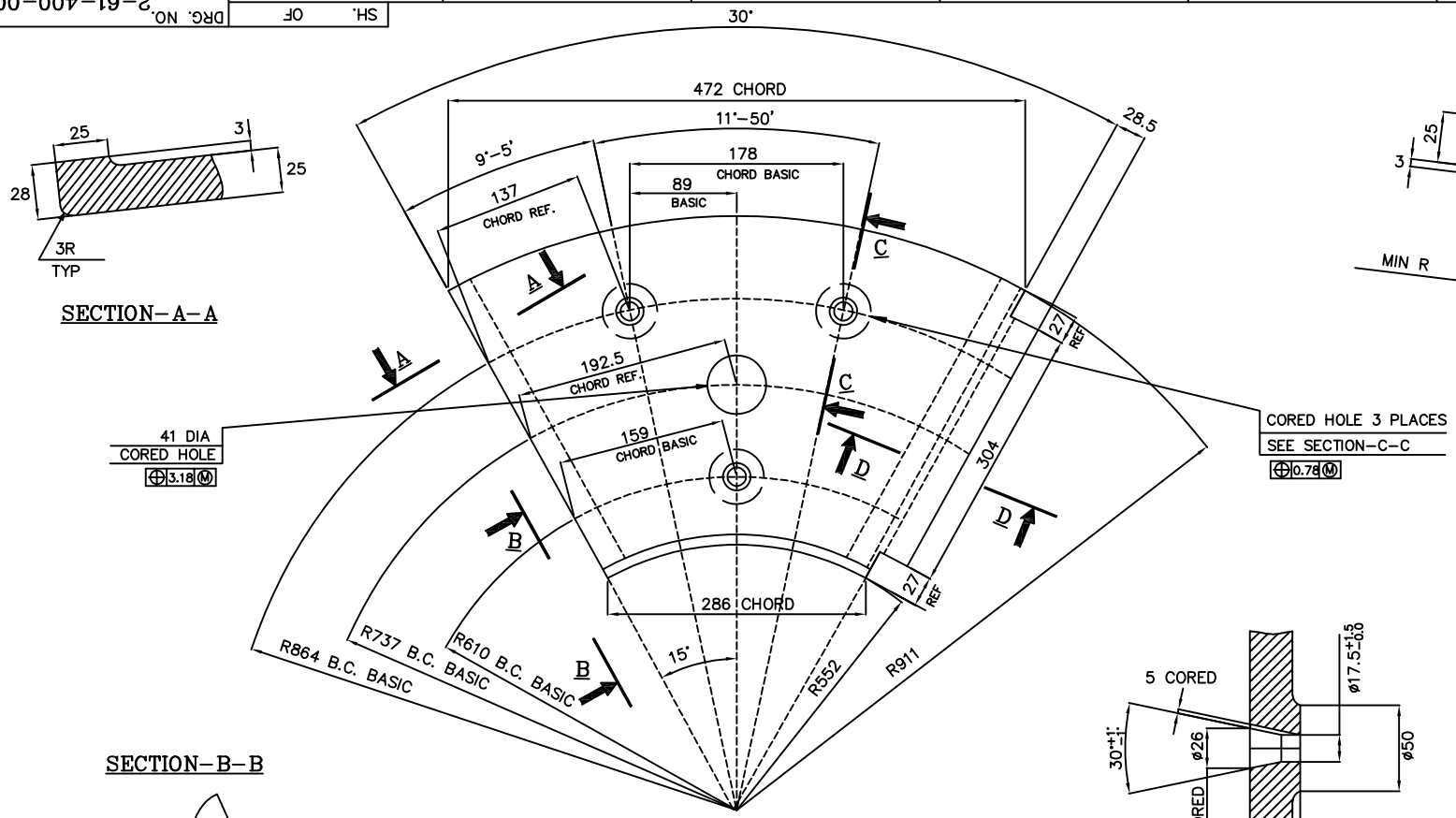

SECTION-A-A

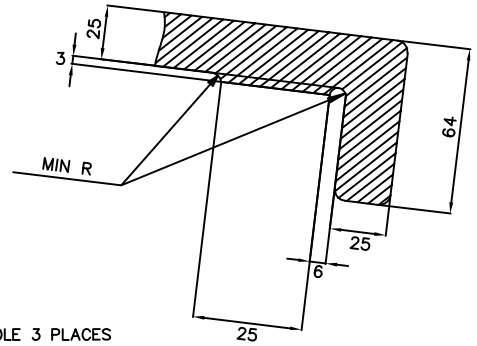

SECTION-D-D

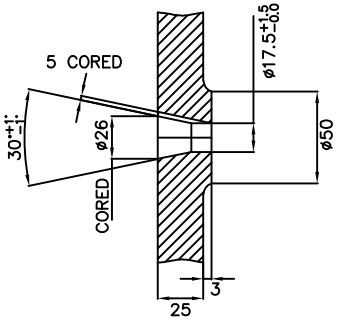

SECTION-C-C

SECTION-B-B

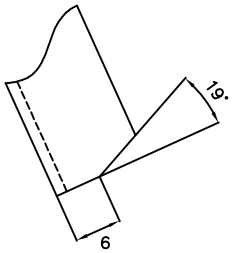

	CASTING			BA9114135124	30.750
				AA19741	
ITEM NO.	DESCRIPTION	DRAWING NO	IT NO.	MATL CODE	UNIT WT.
			VAR NO	MATL SPCN.	QTY

NOTES :-

1. BREAK ALL SHARP EDGES AND CORNERS UNLESS OTHERWISE SPECIFIED.
2. CASTING PATTERN No. 2-61-400-00555.
3. CORED HOLES ARE TO BE CLEANED AND FREE FROM FINS, SAND ETC.
4. DIMENSIONS & LOCATIONS OF THE CORED HOLES ARE TO BE ENSURED WITH A TEMPLATE.

THE FOLLOWING CONDITIONS APPLY EXCEPT OTHERWISE STATED.

1. REF. TO HY0230261 FOR UNSPECIFIED TOLERANCES.
2. CHAMFER M/CD. SHARP EDGES 1.2 TO 1.0 AT 45°
3. INTERNAL M/CD. CORNER RADII 1 TO 0.7
4. THE SURFACE ROUGHNESS WHERE-EVER NOT SHOWN SHALL BE TAKEN FROM THE SURFACE ROUGHNESS SHOWN OUT SIDE THE BACK SLASH GIVEN ON THE TOP MOST RIGHT CORNER OF THE DRG.

TYPE OF PRODUCT OR NAME OF CUSTOMER/PROJECT: SINGRAULI-VII & KORBA-VI

BHARAT HEAVY ELECTRICALS LIMITED
BOILER PLANT UNIT
TIRUCHIRAPALLI-620014

	NAME	SIGN.	DATE	NO.OF VAR.
DRN.	N.D.S	-S.D.-	11.03.98	
CHD.	G.S.N.M.R	-S.D.-	16.10.03	
APPD.	S.G.	-S.D.-	29.06.04	

DEPT.	UNTOL. DIMS.		SCALE	WEIGHT (KG)	REF. TO ASSY. DRG.	ITEM NO.	NO.OF ITEMS
BMD DEPT CODE 446	GR. ¢/M/F		NTS	30.750	C-101-01046/00	01	—

TITLE: OUTLET PLATE LINER

CARD CODE

DRAWING NO. 2-61-400-00555 REV. 01

SHT. No 01 NO. OF SHT. 01

REV.	DATE	ALTERED	REV.	DATE	ALTERED	REV.	DATE	ALTERED	REV.	DATE	ALTERED
		CHD/APPD			CHD/APPD			CHD/APPD	01	11.03.98	N.D.S GSNMR
ZONE			ZONE			ZONE			ZONE		

AA19741 WAS COMBALLOY
NOTES 3&4 ADDED

GENERAL DIMENSIONAL LIMITS,FITS & TOLERANCES AS PER HY0230261

THE INFORMATION ON THIS DOCUMENT IS THE PROPERTY OF BHARAT HEAVY ELECTRICALS LIMITED. IT MUST NOT BE USED DIRECTLY OR INDIRECTLY IN ANY WAY DETRIMENTAL TO THE INTEREST OF THE COMPANY

COMPUTER FILE NAME 26100555.DWG

REF. DRG. NO. C101-01046-0

SIGN. AND DATE

INVENTORY NO

FIRST ANGLE PROJECTION

(ALL DIMENSIONS ARE IN mm)

DRG. NO. 2-61-400-02467

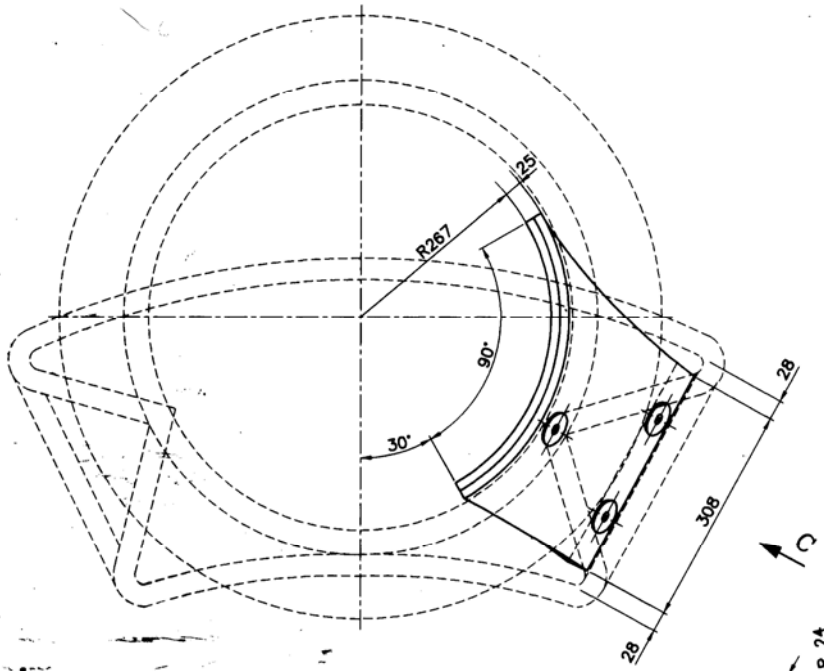

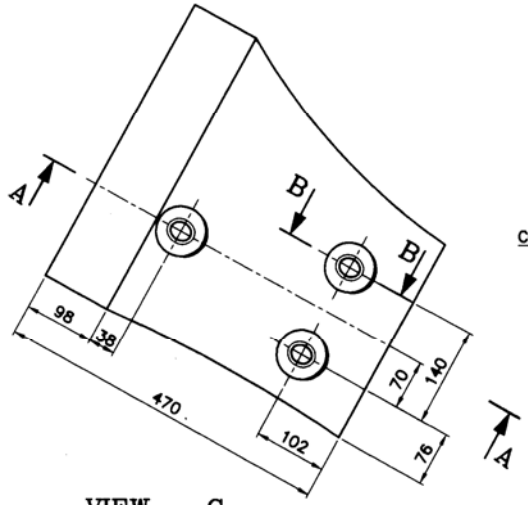

VIEW – C

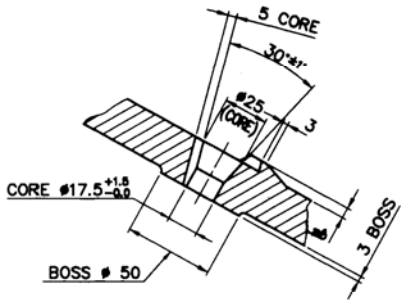

SECTION – BB

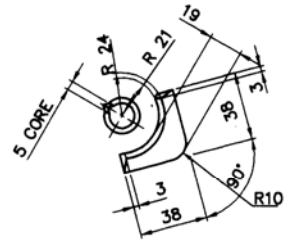

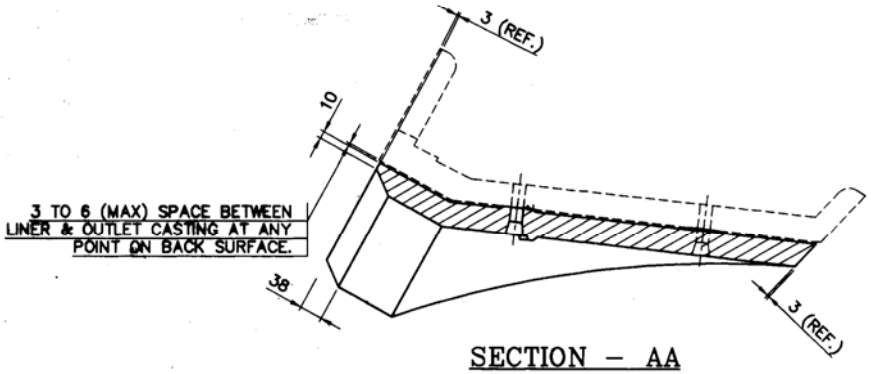

SECTION – AA

NOTES: –

1. MAKE PATTERN SO THAT FINISHED LINER WILL CONFORM TO INSIDE SURFACE OF CASTING MULT. PORT OUTLET.
2. INSPECTION SHALL BE ON THE BASIS OF CONFORMITY TO CASTING MULT. PORT OUTLET DRG. NO. 1-61-400-00251 (RANDOM SELECTION)
3. CORED HOLES ARE TO BE CLEANED AND FREE FROM FINS, SAND ETC.
4. DIMENSIONS & LOCATIONS OF THE CAST CORED HOLES ARE TO BE ENSURED WITH A TEMPLATE.
5. PATTERN NO - M-67-483 FOR NTPC SIMHADRI ONLY AND THE MATCHING M.P.O PATTERN NO IS M-67-710

Dry to D.2
Cadrawin

ITEM NO.	DESCRIPTION	DRAWING NO.	MATL CODE / MATL SPECIN	UNIT WT. / QTY
	CASTING		BA9114133393 / AA19741	35.00

THE FOLLOWING CONDITIONS APPLY EXCEPT OTHERWISE STATED.

1. REFER TO HY0230281 FOR UNSPECIFIED TOLERANCES.
2. CHAMFER MACHINED SHARP EDGES 1.2 TO 1.0 AT 45°
3. INTERNAL MACHINE RADII 1 TO 0.7
4. THE SURFACE ROUGHNESS WHERE-EVER NOT SHOWN SHALL BE TAKEN FROM THE SURFACE ROUGHNESS SHOWN OUT SIDE THE BACKSLASH GIVEN AT THE TOP MOST RIGHT CORNER OF THE DRAWING.

TYPE OF PRODUCT OR NAME OF CUSTOMER/PROJECT: 1003 XRP BOWL MILL

BHARAT HEAVY ELECTRICALS LIMITED HYDERABAD

	NAME	SIGN.	DATE	NO. OF VAR.
DRN.	A.C.S/PAVAN		15.1.97	NA
CHD.	R.JAGANNATH		15.1.97	
APPD.	G.KISTAIAH		15.1.97	

DEPT. PLY-ENGG CODE 4480	GRADE OF TOL.DIM. E/M/F	SCALE	WEIGHT (KG)	REF. TO ASSY DRG.	ITEM NO.	NO. OF ITEMS
		1:5	35.00	2-61-400-00526	01	04

TITLE: MULTIPLE PORT OUTLET LINER

CARD CODE

DRAWING NO. 2-61-400-02467 REV. 01

SHEET NO. 01 NO OF SHEETS 01

REV.	DATE	ALTERED	CHECKED	APPROVED	REV.	DATE	ALTERED	CHECKED	APPROVED	REV.	DATE	ALTERED	CHECKED	APPROVED	REV.	DATE	ALTERED	CHECKED	APPROVED
															01	13.05.98			
ZONE					ZONE					ZONE					ZONE	NOTE-5 ADDED			

THE INFORMATION ON THIS DOCUMENT IS THE PROPERTY OF BHARAT HEAVY ELECTRICALS LIMITED. IT MUST NOT BE USED DIRECTLY OR INDIRECTLY IN ANY WAY DETRIMENTAL TO THE INTEREST OF THE COMPANY

INVENTORY NO. ISSUE AND DATE REF. DRG. NO.

2610 2467.DWG/1060

FIRST ANGLE PROJECTION

(ALL DIMENSIONS ARE IN mm)

DRG.NO. 2-61-462-00593

THE INFORMATION ON THIS DOCUMENT IS THE PROPERTY OF BHARAT HEAVY ELECTRICALS LIMITED.
IT MUST NOT BE USED DIRECTLY OR INDIRECTLY IN ANY WAY DETRIMENTAL TO THE INTEREST OF THE COMPANY.

COMP. FILE NAME 26100593.DWG

REF.DRG.NO.

INVENTORY NO.

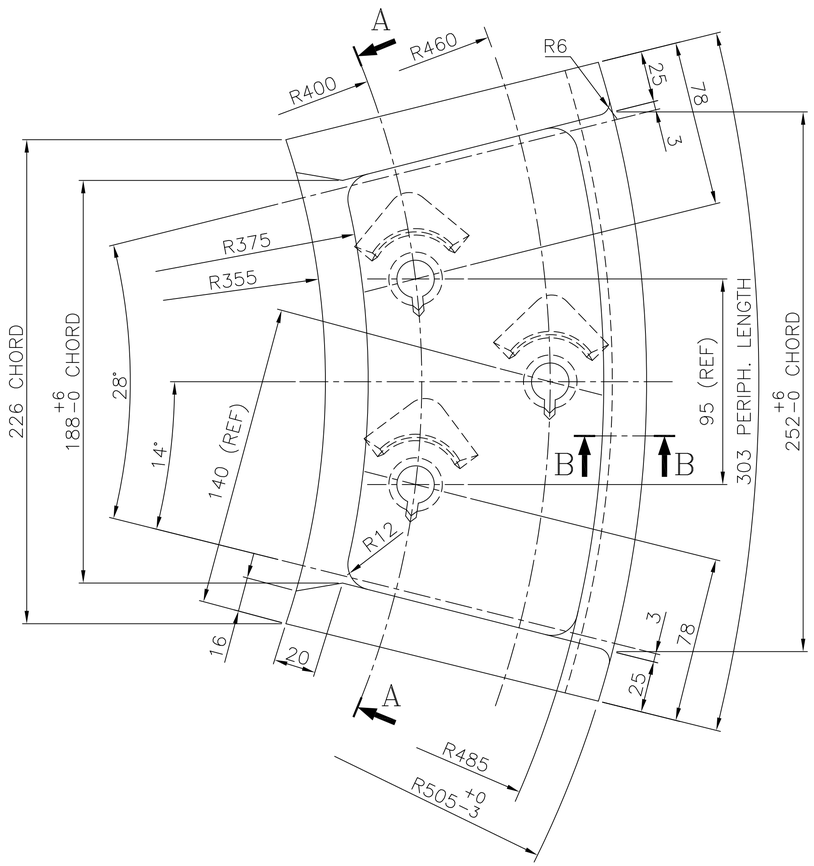

PATTERN No. 2-61-462-00593

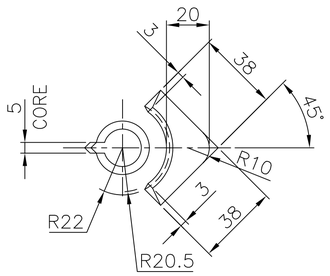

VIEW-P

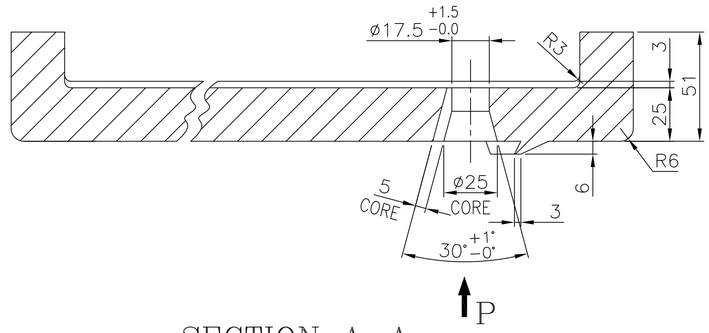

SECTION A-A

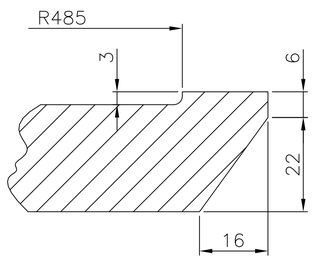

SECTION B-B

ITEM NO	DESCRIPTION	DRAWING NO.	VAR. NO.	RAW MATERIAL SIZE OR CASTING DRG.NO. OR FORGING DRG.NO.	MATERIAL CODE	NET WT.	GROSS WT.
					BA9114133792	9.144	
	CASTING				AA19741	1	
					MATERIAL SPECN.	QUANTITY	

THE FOLLOWING CONDITIONS APPLY EXCEPT OTHERWISE STATED...

1. REF.TO HY0230261 FOR UNSPECIFIED TOLERANCES.
2. CHAMFER M/CD SHARP EDGES 1.2 TO 1.0 AT 45°.
3. INTERNAL M/CD CORNER RADII 1 TO 0.7.
4. THE SURFACE ROUGHNESS WHEREVER NOT SHOWN SHALL BE TAKEN FROM THE SURFACE ROUGHNESS SHOWN OUT SIDE BACK SLASHES GIVEN AT THE TOP MOST RIGHT CORNER OF THE DRG.

TYPE OF PRODUCT OR NAME OF CUSTOMER/PROJECT: 623 XRP BOWL MILL

BHARAT HEAVY ELECTRICALS LTD. HYDERABAD

	NAME	SIGN.	DATE	NO.OF VAR.
DRN.	POORNIMA		10.02.03	NA
CHD.	N.D.S		10.02.03	
APPD.	G.K		10.02.03	

DEPT.	SCALE	WEIGHT(Kg)	REF. TO ASSY DRG.	ITEM NO.	NO.OF ITEMS
HE-DESIGN	1:2 1:1	9.144	2-61-462-00189	NA	NA
CODE 446					

TITLE: M.P.O PLATE LINER

DRAWING NO. 2-61-462-00593 REV. 02

SHEET NO. 01 NO OF SHEETS 01

REV.	DATE	ALTERED	CHECKED	APPD.
02	10.02.03	ALTERED CNY	CHECKED NDS	APPD. GK

ZONE

DRAWING IS REDRAWN ON ACAD. INCORPORATING THE PREVIOUS REVISION

TD-150/REV.NO.03 SIZE A2

(ALL DIMENSIONS ARE IN mm)

DRG. NO. 2-61-476-00118

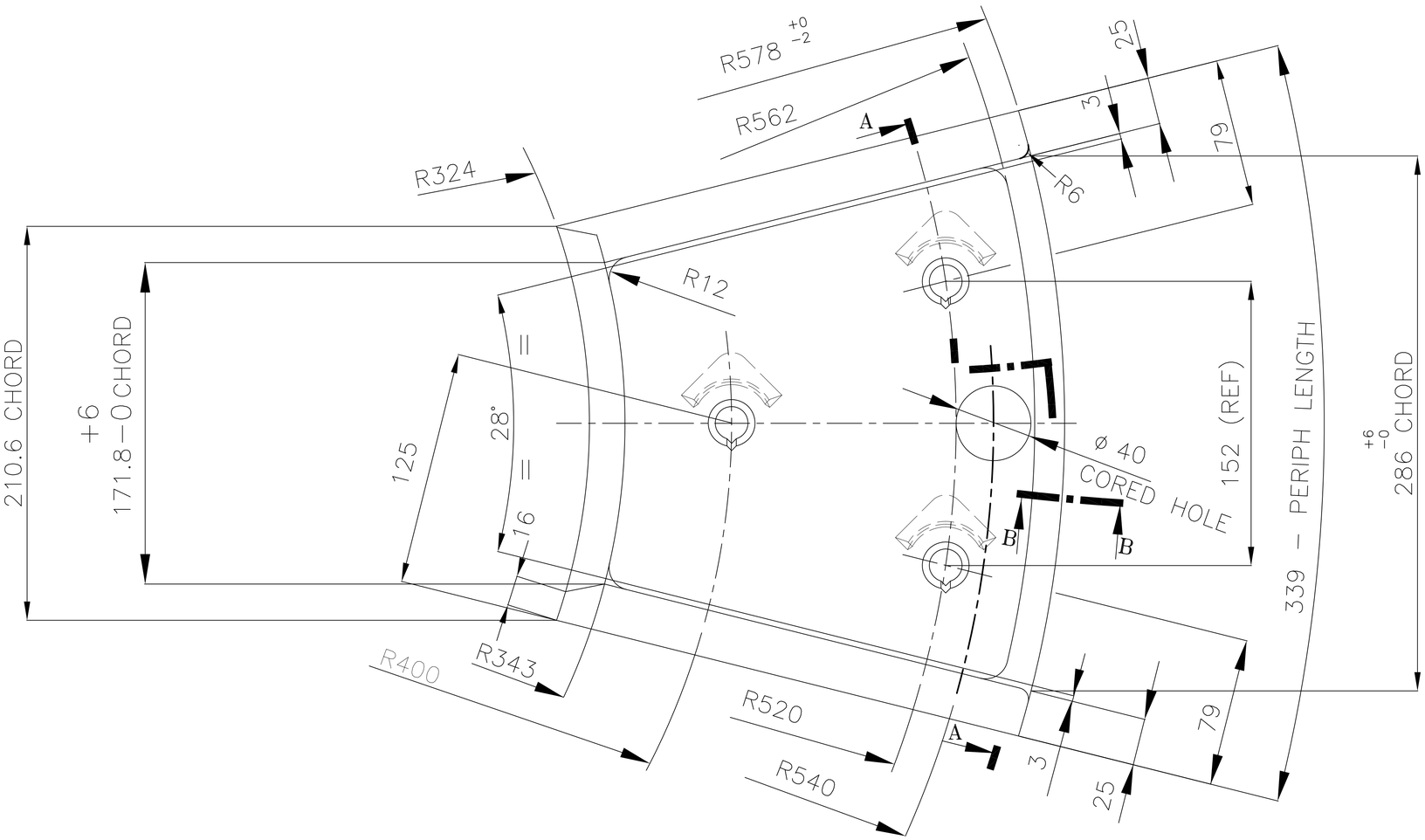

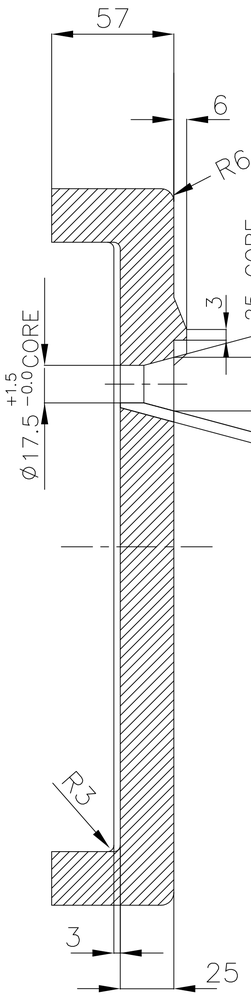

SECTION−AA

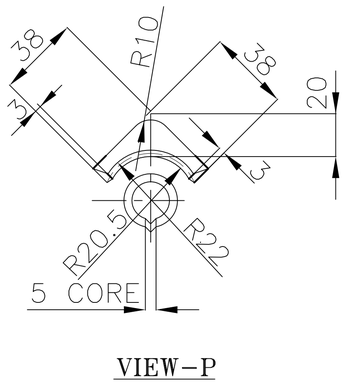

VIEW−P

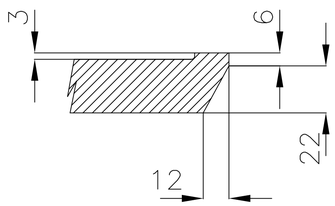

SECTION−BB

ITEM NO.	DESCRIPTION	DRAWING NO.	VAR. NO.	RAW MATERIAL SIZE OR CASTING DRG. NO. OR FORGING DRG. NO.	MATERIAL CODE	NET WT.	GROSS WT.
	CASTING				BA9114133091		15.00
					AA19741	1	
					MATERIAL SPECN.	QUANTITY	

THE FOLLOWING CONDITIONS APPLY EXCEPT OTHERWISE STATED.

1. REF. TO HY0230261 FOR UNSPECIFIED TOLERANCES.
2. CHAMFER M/CD. SHARP EDGES 1.2 TO 1.0 AT 45°.
3. INTERNAL M/CD. CORNER RADII 1 TO 0.7
4. THE SURFACE ROUGHNESS WHERE-EVER NOT SHOWN SHALL BE TAKEN FROM THE SURFACE ROUGHNESS SHOWN OUT SIDE THE BACK SLASH GIVEN OR THE TOP MOST RIGHT CORNER OF THE DRG.

TYPE OF PRODUCT
NAME OF CUSTOMER/PROJECT
803 XRP BOWL MILL

BHARAT HEAVY ELECTRICALS LIMITED
HYDERABAD

	NAME	SIGN.	DATE	NO.OF VAR.
DRN.	E.M.ASHOK		27-9-97	
CHD.	S.GHATGE		28-9-97	
APPD.	K.M.RAO		28-9-97	

DEPT. 446	UNTOL. DIMS. GR.	SCALE	WEIGHT (KG)	REF. TO ASSY DRG.	ITEM NO.	NO.OF ITEMS
CODE PULV.	¢/M/¢	1:2	15.00			

TITLE
OUTLET PLATE LINER

CARD CODE

DRAWING NO. 2-61-476-00118
REV. 04
SHEET NO. 01
NO OF SHEETS 01

REV.	DATE	ALTERED	CHD./APPD.	ZONE
04	27-9-97	ALTERED E.M.ASHOK KUMAR	CHD./APPD. S.GHATGE	DRG RETRACED WITH ALL PREVIOUS REVISIONS.

THE INFORMATION ON THIS DOCUMENT IS THE PROPERTY OF BHARAT HEAVY ELECTRICALS LIMITED.
IT MUST NOT BE USED DIRECTLY OR INDIRECTLY IN ANY WAY DETRIMENTAL TO THE INTERESTS OF THE COMPANY.

INVENTORY NO | SIGN. AND DATE | REF. DRG. NO. 26100118

FIRST ANGLE PROJECTION

(ALL DIMENSIONS ARE IN mm)

DRG. NO. 2-61-488-02055 SH. OF

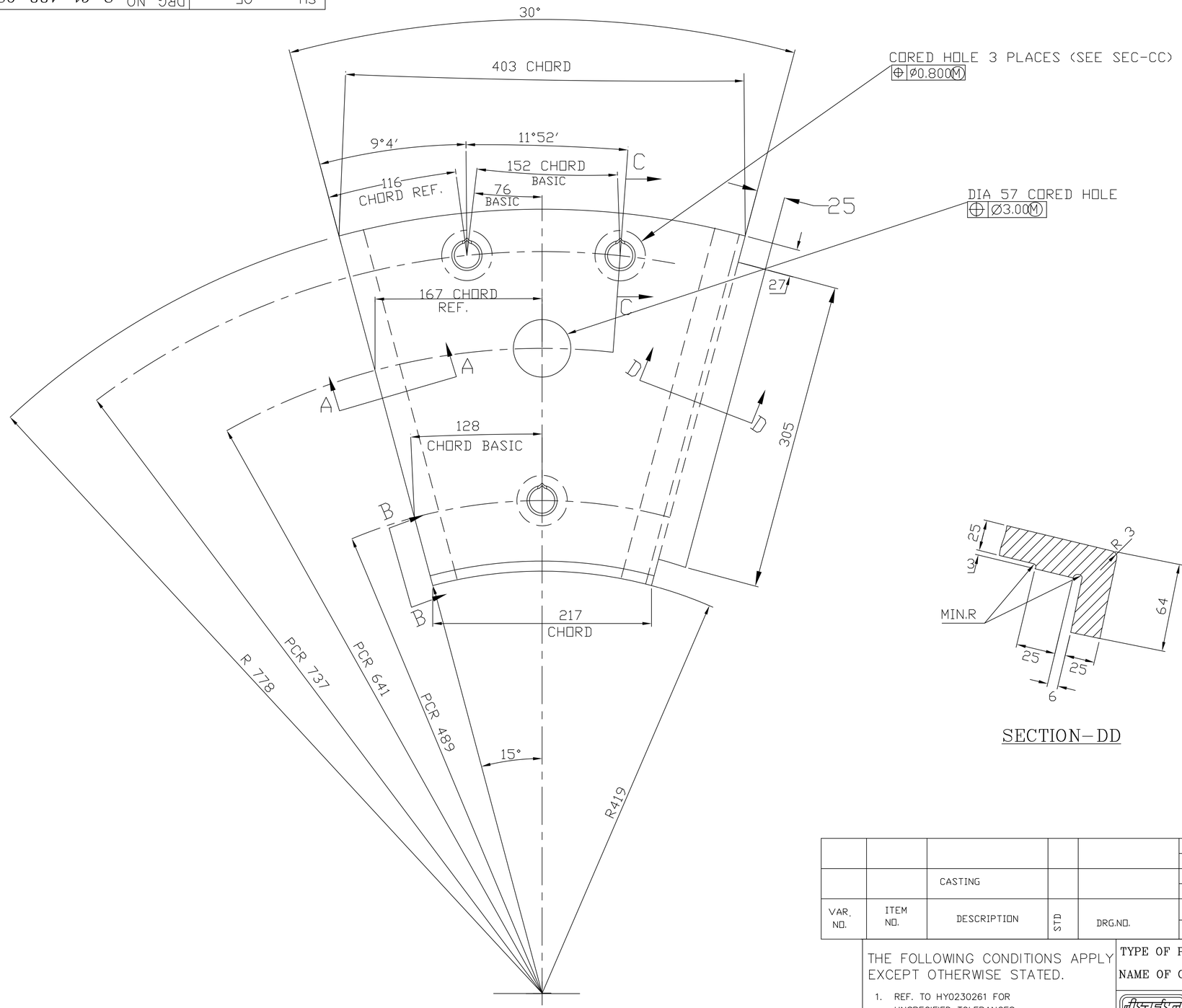

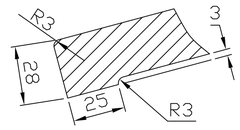

SECTION–AA

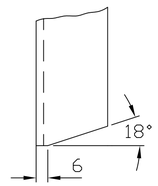

VIEW–BB

SECTION–DD

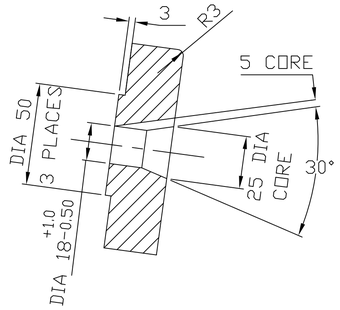

SECTION–CC

VAR. NO.	ITEM NO.	DESCRIPTION	STD	DRG.NO.	ITEM NO. / VAR. NO.	MATL. CODE / MATL. SPECN	A / C	UNIT	UNIT WT. / QTY.	GS	ZONE
		CASTING				BA9114135035 / AA19741			25.000		

THE FOLLOWING CONDITIONS APPLY EXCEPT OTHERWISE STATED.

1. REF. TO HY0230261 FOR UNSPECIFIED TOLERANCES.
2. CHAMFER M/CD. SHARP EDGES 1.2 TO 1.0 AT 45°
3. INTERNAL M/CD. CORNER RADII 1 TO 0.7
4. THE SURFACE ROUGHNESS WHERE-EVER NOT SHOWN SHALL BE TAKEN FROM THE SURFACE ROUGHNESS SHOWN OUT SIDE THE BACK SLASH GIVEN ON THE TOP MOST RIGHT CORNER OF THE DRG.

REV.	DATE	ALTERED
01		CHD/APPD
ZONE		DRG. REDRAWN

TYPE OF PRODUCT OR NAME OF CUSTOMER/PROJECT: 883 XRP BOWL MILL

BHARAT HEAVY ELECTRICALS LIMITED HYDERABAD

	NAME	SIGN.	DATE
DRN.	ANURADHA		21.10.02
CHD.	N.D.SAMUEL		21.10.02
APPD.	G.KISTAIAH		21.10.02

NO.OF VAR.

DEPT.	UNTOL. DIMS.		SCALE	WEIGHT (KG)	REF. TO ASSY. DRG.	ITEM NO.	NO.OF ITEMS
PUL.V.ENGG DEPT. CODE: 446	GR. /M/		NTS	25.000	0-61-488-0515 (C-94-810/0)		

TITLE: OUTLET PLATE LINER

CARD CODE

DRAWING NO. 2-61-488-02055 REV. 01

SHT. No NO. OF SHT.

THE INFORMATION ON THIS DOCUMENT IS THE PROPERTY OF BHARAT HEAVY ELECTRICALS LIMITED. IT MUST NOT BE USED DIRECTLY OR INDIRECTLY IN ANY WAY DETRIMENTAL TO THE INTEREST OF THE COMPANY

COMPUTER FILE NAME 26102055.DWG

GENERAL DIMENSIONAL LIMITS,FITS & TOLERANCES AS PER HY0230261

SIGN. AND DATE | REF. DRG. NO. | INVENTORY NO

(ALL DIMENSIONS ARE IN mm)

DRG. NO.2-BM-362-00003

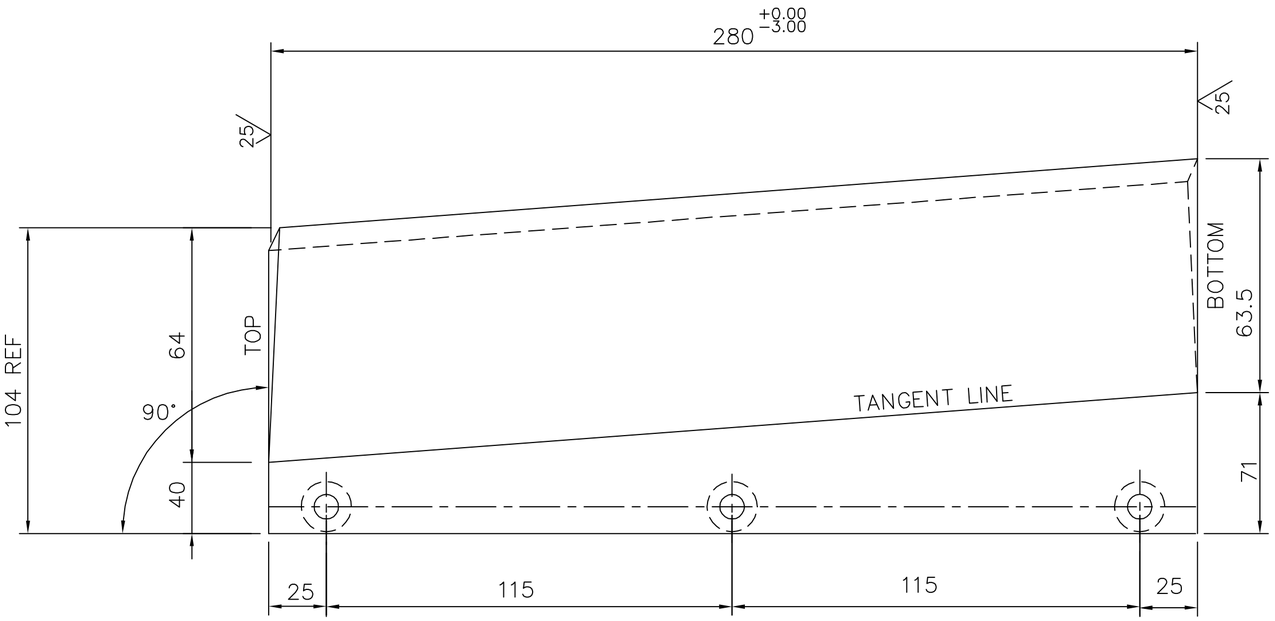

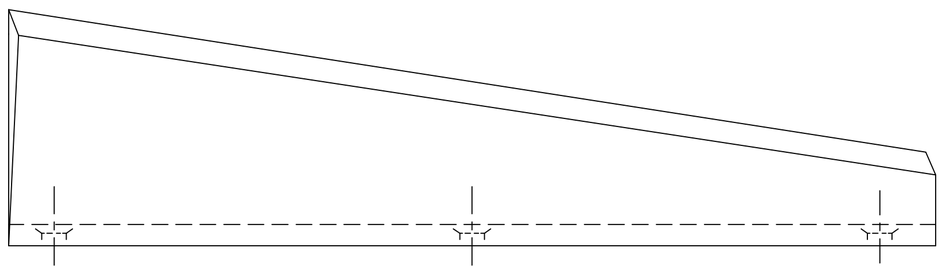

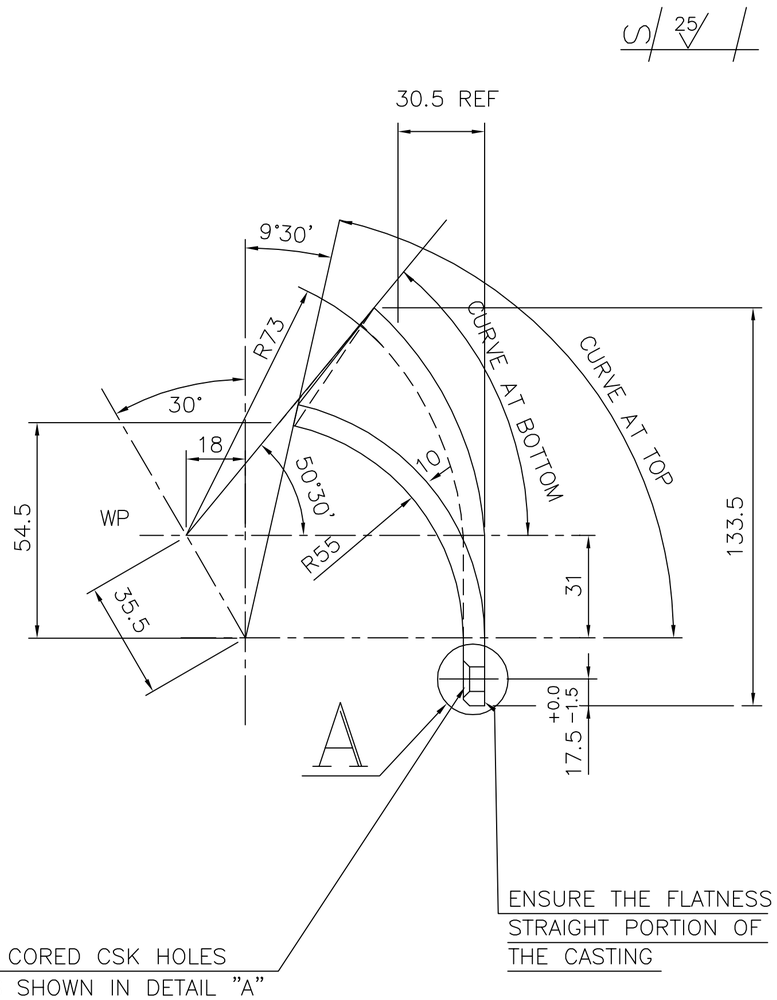

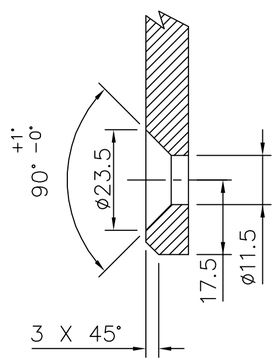

DETAIL-A

REF.TO HY0230261 FOR UNSPECIFIED TOLERANCES

ITEM NO.	DESCRIPTION	DRAWING NO.	MATL CODE / MATL SPECN	UNIT WT. / QTY
	DEFLECTOR BLADE		BA9114103028	
			AA19741	1

TYPE OF PRODUCT
OR
NAME OF CUSTOMER/PROJECT

BHARAT HEAVY ELECTRICALS LTD.
HYDERABAD

	NAME	SIGN.	DATE	NO.OF VAR.
DRN.	S.TEWARI	-sd-	23.6.05	
CHD.	S.TEWARI	-sd-	23.6.05	
APPD.	V.KUMAR	-sd-	23.6.05	

DEPT.	GRADE OF TOL.DIM.		SCALE	WEIGHT (KG)	REF. TO ASSY DRG.	ITEM NO.	NO.OF ITEMS
PULV-ENGG CODE 4460	E/M/P		NTS		2-61-362-00715	02	

TITLE: DEFLECTOR BLADE

CARD CODE

DRAWING NO. 2-BM-362-00003 REV. 00

SHEET NO. 01 NO OF SHEETS 01

REV.	DATE	ALTERED / CHECKED / APPROVED
ZONE		

THE INFORMATION ON THIS DOCUMENT IS THE PROPERTY OF BHARAT HEAVY ELECTRICALS LIMITED.
IT MUST NOT BE USED DIRECTLY OR INDIRECTLY IN ANY WAY DETRIMENTAL TO THE INTEREST OF THE COMPANY

INVENTORY NO | SIGN. AND DATE | REF. DRG. NO. 26100706

FIRST ANGLE PROJECTION

(ALL DIMENSIONS ARE IN mm)

DRG.NO.3-61-062-00579

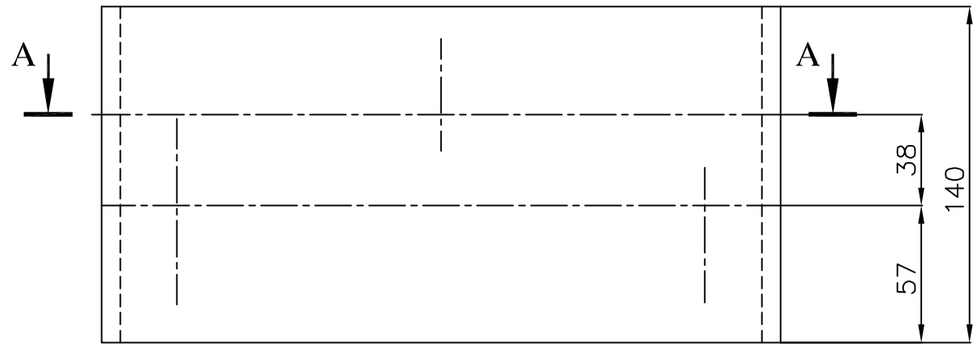

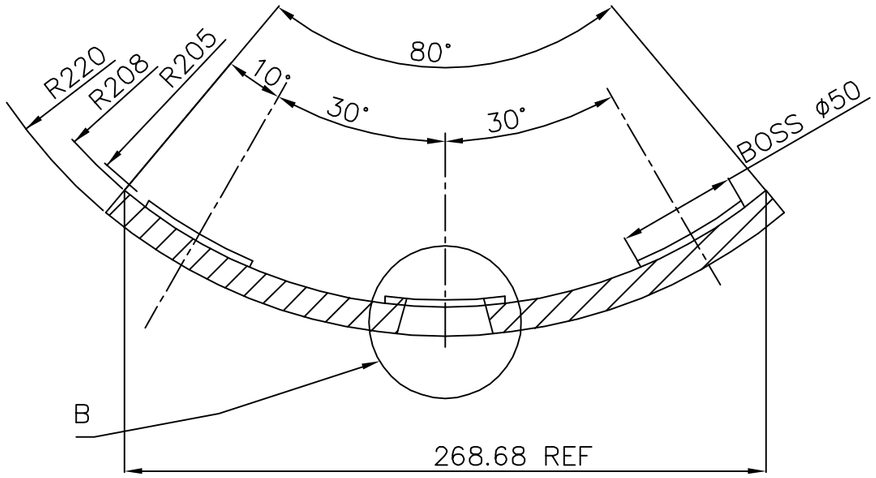

SECTION - AA

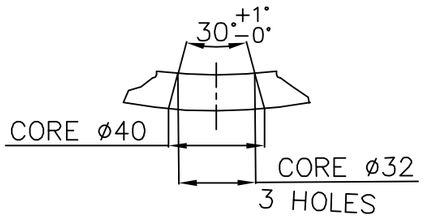

DETAIL-B

NOTES

1. BREAK ALL SHARP EDGES UNLISS OTHERWISE NOTED
2. PATTERN NO.3-61-062-00579
3. CASTING TOLERANCE UNLESS OTHERWISE NOTED ±1.6

ITEM NO	DESCRIPTION	DRAWING NO.	VAR. NO.	RAW MATERIAL SIZE OR CASTING DRG.NO. OR FORGING DRG.NO.	MATERIAL CODE / MATERIAL SPECN.	NET WT.	GROSS WT.
01	CASTING				— / COMBALLOY	3.95	
					QUANTITY	1	

THE FOLLOWING CONDITIONS APPLY EXCEPT OTHERWISE STATED...

1. REF.TO HY0230261 FOR UNSPECIFIED TOLERANCES.
2. CHAMFER M/CD SHARP EDGES 1.2 TO 1.0 AT 45°.
3. INTERNAL M/CD CORNER RADII 1 TO 0.7.
4. THE SURFACE ROUGHNESS WHEREVER NOT SHOWN SHALL BE TAKEN FROM THE SURFACE ROUGHNESS SHOWN OUT SIDE BACK SLASHES GIVEN AT THE TOP MOST RIGHT CORNER OF THE DRG.

TYPE OF PRODUCT
OR
NAME OF CUSTOMER/PROJECT

भारत हेवी इलेक्ट्रिकल्स लिमिटेड
हैदराबाद
BHARAT HEAVY ELECTRICALS LTD.
HYDERABAD

	NAME	SIGN.	DATE
DRN.	RAZVI		9.11.02
CHD.	NDSAMUEL		9.11.02
APPD.	S.GHATGE		9.11.02

NO.OF VAR.

DEPT.	CODE	SCALE	WEIGHT (KG)	REF. TO ASSY DRG.	ITEM NO.	NO.OF ITEMS
PULVE	443	1:2.5	3.95	—	—	—

TITLE

JOURNAL HEAD LINER-I

DRAWING NO. 3-61-062-00579 REV. 03

SHEET NO. 01 NO OF SHEETS 01

REV.	DATE	ALTERED	CHECKED	APPD.
03	17.10.03	2 CORED HOLES DELETED.		
02	9.11.02	DRAWING REDRAWN ON AUTOCAD.		

INVENTORY NO.

REF.DRG.NO.

COMP. FILE NAME 36100579.DWG

THE INFORMATION ON THIS DOCUMENT IS THE PROPERTY OF BHARAT HEAVY ELECTRICALS LTD.
IT MUST NOT BE USED DIRECTLY OR INDIRECTLY IN ANY WAY DETRIMENTAL TO THE INTEREST OF THE COMPANY.

TD-151/REV. 03 SIZE A3

FIRST ANGLE PROJECTION

(ALL DIMENSIONS ARE IN mm)

DRG.NO. 3-61-062-00580

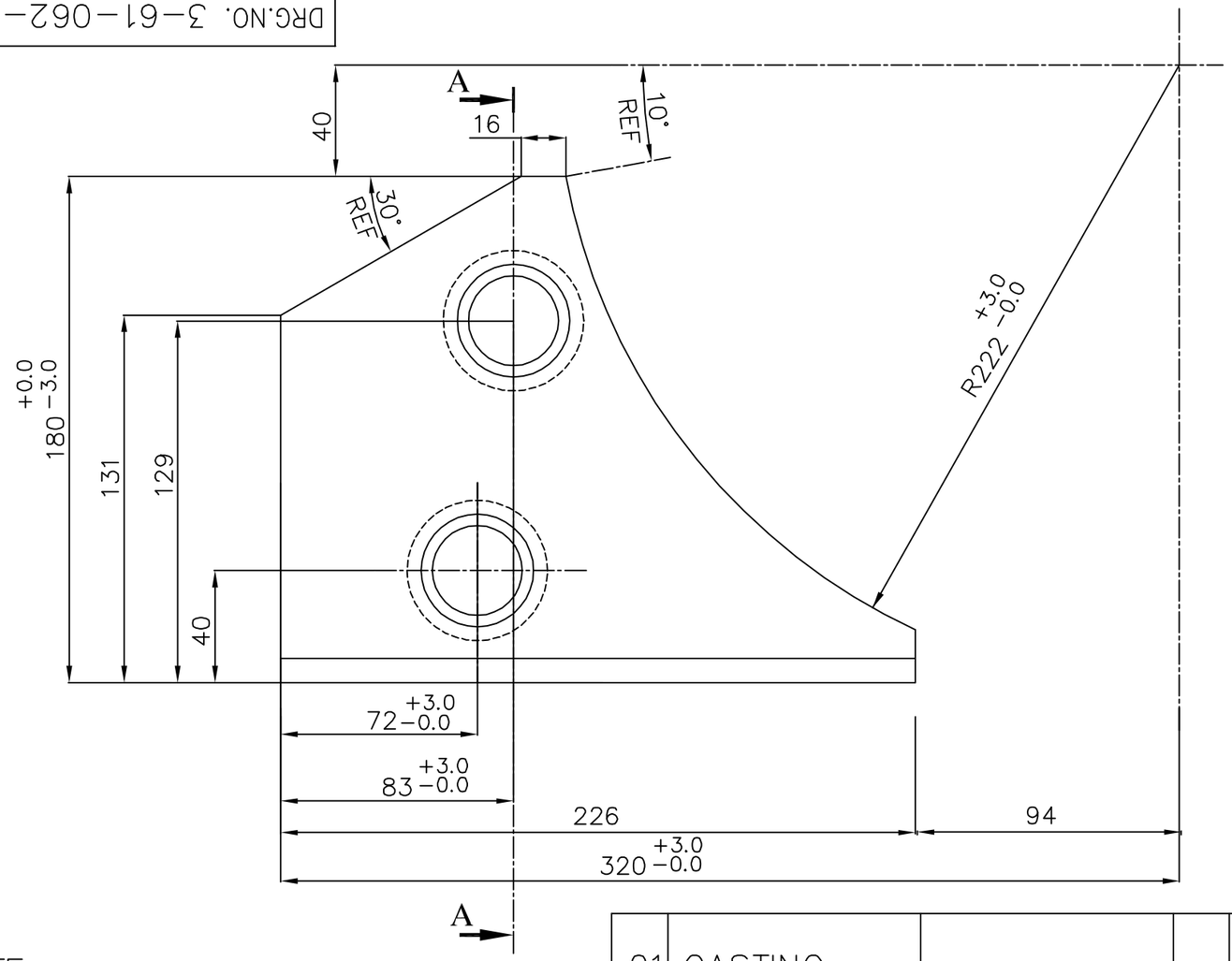

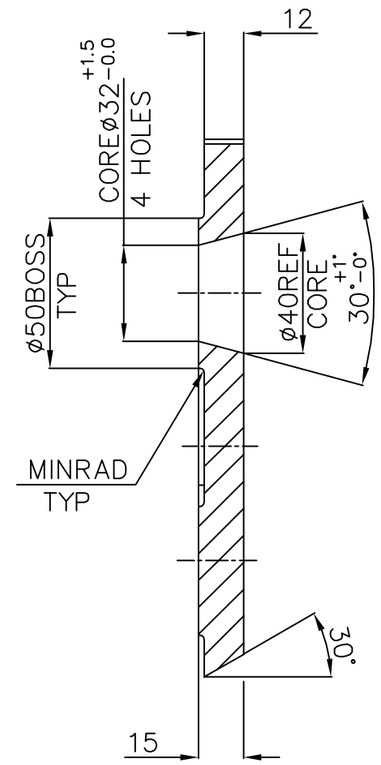

SECTION-AA

NOTE.

1. BREAK ALL SHARP EDGES UNLES OTHERWISE NOTED.
2. PATTERN NO.: 3-61-062-00580.
3. CASTING TOLERANCE UNLESS OTHERWISE NOTED ±1.6.

ITEM NO	DESCRIPTION	DRAWING NO.	VAR. NO.	RAW MATERIAL SIZE OR CASTING DRG.NO. OR FORGING DRG.NO.	MATERIAL CODE	NET WT.	GROSS WT.
01	CASTING				BA9114133997	2.70	
					AA10741	1	
					MATERIAL SPECN.	QUANTITY	

THE FOLLOWING CONDITIONS APPLY EXCEPT OTHERWISE STATED...

1. REF.TO HY0230261 FOR UNSPECIFIED TOLERANCES.
2. CHAMFER M/CD SHARP EDGES 1.2 TO 1.0 AT 45°.
3. INTERNAL M/CD CORNER RADII 1 TO 0.7.
4. THE SURFACE ROUGHNESS WHEREVER NOT SHOWN SHALL BE TAKEN FROM THE SURFACE ROUGHNESS SHOWN OUT SIDE BACK SLASHES GIVEN AT THE TOP MOST RIGHT CORNER OF THE DRG.

TYPE OF PRODUCT OR NAME OF CUSTOMER/PROJECT: 623 XRPBM

BHARAT HEAVY ELECTRICALS LTD. HYDERABAD

	NAME	SIGN.	DATE	NO.OF VAR.
DRN.	RAZVI		11.11.02	
CHD.	NDSAMUEL		11.11.02	
APPD.	S.GHATGE		11.11.02	

DEPT.	PULVE.ENGG	SCALE	WEIGHT (KG)	REF. TO ASSY DRG.	ITEM NO.	NO.OF ITEMS
CODE	446	1:2	2.70	1-61-062-00314	03	—

TITLE: JOURNAL HEAD LINER-II

DRAWING NO. 3-61-062-00580 REV. 04

SHEET NO. 01 NO OF SHEETS 01

REV.	DATE	ALTERED		REV.	DATE	ALTERED	
04	17.10.03	CHD.	APPD.	03	11.11.02	CHD.	APPD.
ZONE	2 CORED HOLES REMOVED			ZONE	DRAWING REDAWN ON AUTOCAD.		

THE INFORMATION ON THIS DOCUMENT IS THE PROPERTY OF BHARAT HEAVY ELECTRICALS LTD. IT MUST NOT BE USED DIRECTLY OR INDIRECTLY IN ANY WAY DETRIMENTAL TO THE INTEREST OF THE COMPANY.

FILE NAME: 36100580.DWG

REF.DRG.NO.

INVENTORY NO.

TD-151/REV. 03 SIZE A3

FIRST ANGLE PROJECTION

(ALL DIMENSIONS ARE IN mm)

DRG.NO. 3-61-062-00581

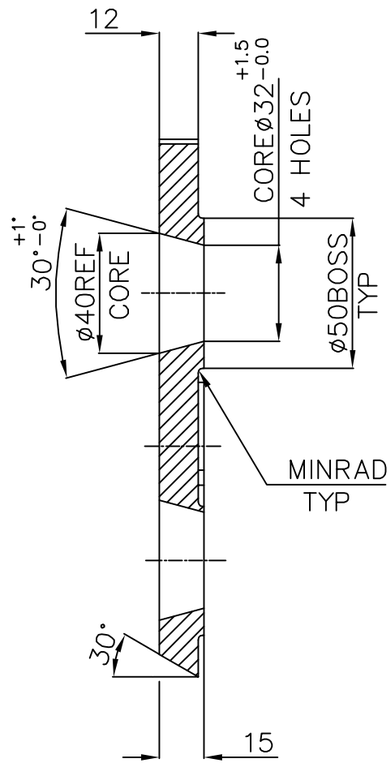

SECTION-AA

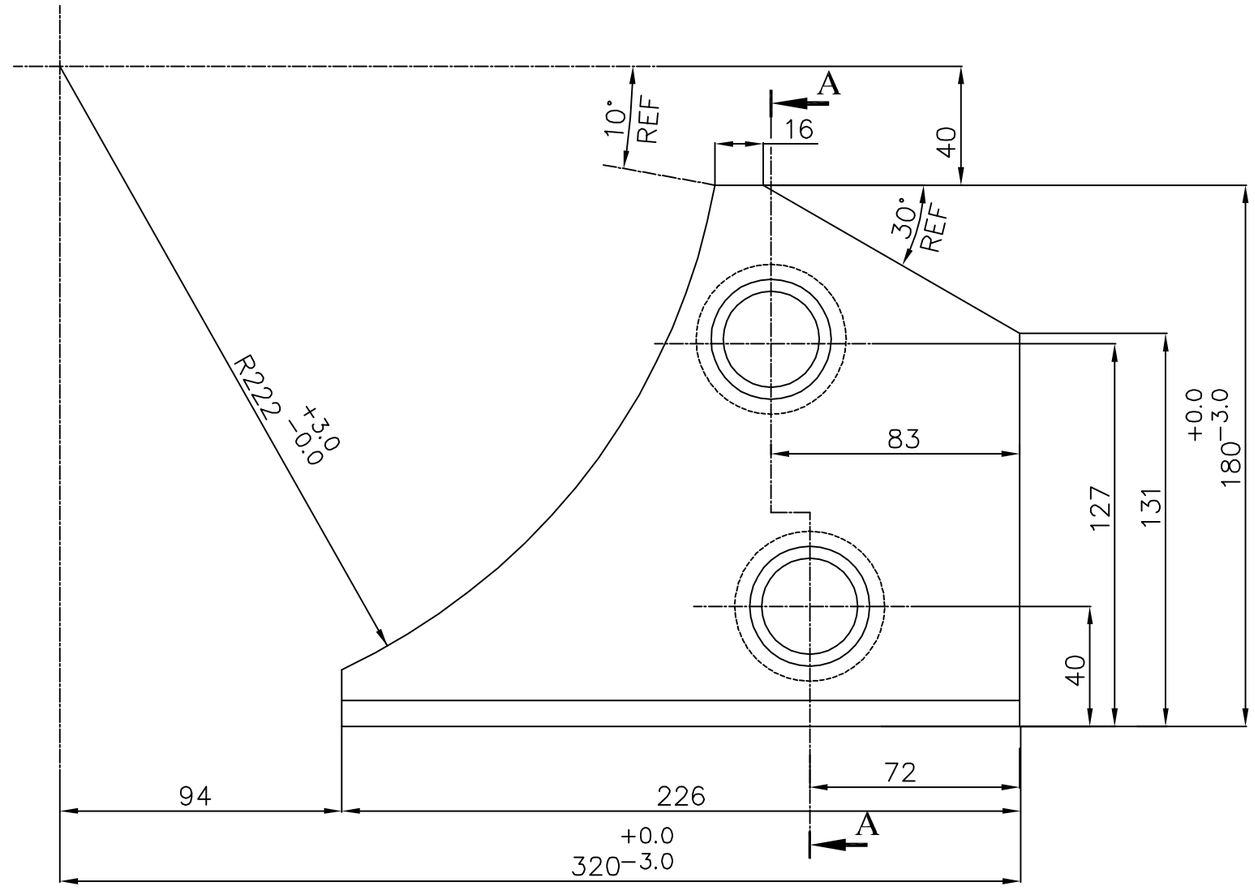

NOTE.

1. BREAK ALL SHARP EDGES UNLES OTHERWISE NOTED.
2. PATTERN NO.: 3-61-062-00581.
3. CASTING TOLERANCE UNLESS OTHERWISE. NOTED ±1.6

ITEM NO	DESCRIPTION	DRAWING NO.	VAR. NO.	RAW MATERIAL SIZE OR CASTING DRG.NO. OR FORGING DRG.NO.	MATERIAL CODE	NET WT.	GROSS WT.
01	CASTING				BA9114134004	2.70	
					AA19741	1	
					MATERIAL SPECN.	QUANTITY	

THE FOLLOWING CONDITIONS APPLY EXCEPT OTHERWISE STATED...

1. REF.TO HY0230261 FOR UNSPECIFIED TOLERANCES.
2. CHAMFER M/CD SHARP EDGES 1.2 TO 1.0 AT 45°.
3. INTERNAL M/CD CORNER RADII 1 TO 0.7.
4. THE SURFACE ROUGHNESS WHEREVER NOT SHOWN SHALL BE TAKEN FROM THE SURFACE ROUGHNESS SHOWN OUT SIDE BACK SLASHES GIVEN AT THE TOP MOST RIGHT CORNER OF THE DRG.

TYPE OF PRODUCT OR NAME OF CUSTOMER/PROJECT: 623 XRPBM

BHARAT HEAVY ELECTRICALS LTD. HYDERABAD

	NAME	SIGN.	DATE	NO.OF VAR.
DRN.	RAZVI		11.11.02	
CHD.	NDSAMUEL		11.11.02	
APPD.	S.GHATGE		11.11.02	

DEPT.	PULVE.ENGG	SCALE	WEIGHT (KG)	REF. TO ASSY DRG.	ITEM NO.	NO.OF ITEMS
CODE	446	1:2	2.70	1-61-062-00314	04	—

TITLE: JOURNAL HEAD LINER-III

DRAWING NO. 3-61-062-00581 REV. 04

SHEET NO. 01 NO OF SHEETS 01

REV.	DATE	ALTERED		REV.	DATE	ALTERED	
04	17.10.03	CHD.	APPD.	03	11.11.02	CHD.	APPD.
ZONE	2 CORED HOLES DELETED.			ZONE	DRAWING REDAWN ON AUTOCAD.		

THE INFORMATION ON THIS DOCUMENT IS THE PROPERTY OF BHARAT HEAVY ELECTRICALS LTD. IT MUST NOT BE USED DIRECTLY OR INDIRECTLY IN ANY WAY DETRIMENTAL TO THE INTEREST OF THE COMPANY.

FILE NAME: 36100581.DWG

REF.DRG.NO.

INVENTORY NO.

TD-151/REV. 03 SIZE A3

FIRST ANGLE PROJECTION

(ALL DIMENSIONS ARE IN mm)

DRG.NO. 3-61-062-00582

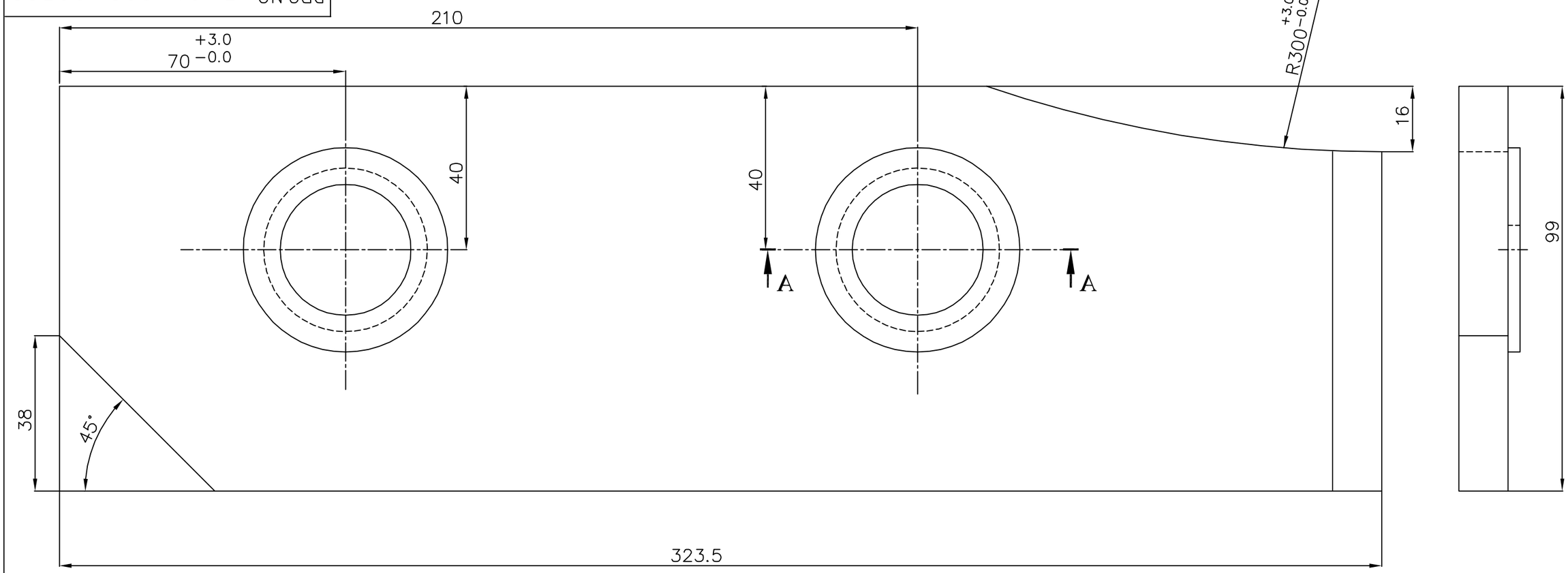

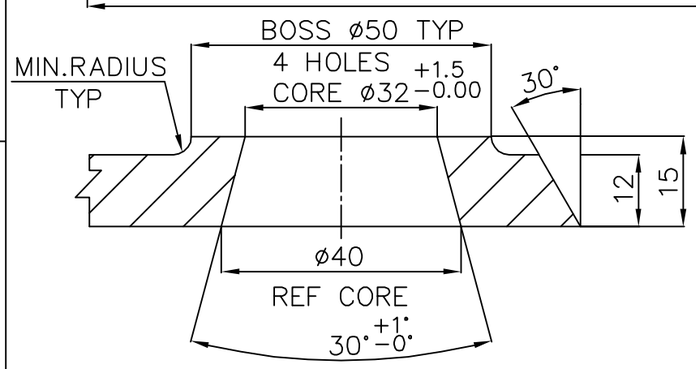

SECTION-AA

NOTE

1. BREAK ALL SHARP EDGES UNLESS OTHERWISE NOTED.
2. PATTERN NO.3-61-062-00582
3. CASTING TOLERANCE UNLESS OTHERWISE NOTED ±1.6

REV.	DATE	ALTERED		REV.	DATE	ALTERED	
05	17.10.03	CHECKED	APPD.	04	8.11.02	CHECKED	APPD.
2 CORED HOLES DELETED				DRAWING REDRAWN.			

ITEM NO	DESCRIPTION	DRAWING NO.	VAR. NO.	RAW MATERIAL SIZE OR CASTING DRG.NO. OR FORGING DRG.NO.	MATERIAL CODE	NET WT.	GROSS WT.
01	CASTING				BA9114134012	2.60	
					AA19741	1	
					MATERIAL SPECN.	QUANTITY	

THE FOLLOWING CONDITIONS APPLY EXCEPT OTHERWISE STATED...

1. REF.TO HY0230261 FOR UNSPECIFIED TOLERANCES.
2. CHAMFER M/CD SHARP EDGES 1.2 TO 1.0 AT 45°.
3. INTERNAL M/CD CORNER RADII 1 TO 0.7.
4. THE SURFACE ROUGHNESS WHEREVER NOT SHOWN SHALL BE TAKEN FROM THE SURFACE ROUGHNESS SHOWN OUT SIDE BACK SLASHES GIVEN AT THE TOP MOST RIGHT CORNER OF THE DRG.

TYPE OF PRODUCT OR NAME OF CUSTOMER/PROJECT: 623 XRPBM

भारत हैवी इलेक्ट्रिकल्स लिमिटेड हैदराबाद
BHARAT HEAVY ELECTRICALS LTD. HYDERABAD

	NAME	SIGN.	DATE
DRN.	RAZVI		8.11.02
CHD.	NDSAMUEL		8.11.02
APPD.	SGHATGE		8.11.02

NO.OF VAR.

DEPT.	SCALE	WEIGHT (KG)	REF. TO ASSY DRG.	ITEM NO.	NO.OF ITEMS
CODE	1:1	2.60	1.61.062.00314		05

TITLE: JOURNAL HEAD LINER IV

DRAWING NO. 3-61-062-00582 REV. 05

SHEET NO. | NO OF SHEETS

TD-151/REV. 03 SIZE A3

THE INFORMATION ON THIS DOCUMENT IS THE PROPERTY OF BHARAT HEAVY ELECTRICALS LTD. IT MUST NOT BE USED DIRECTLY OR INDIRECTLY IN ANY WAY DETRIMENTAL TO THE INTEREST OF THE COMPANY.

COMP. FILE NAME 36100582.DWG

REF.DRG.NO.

INVENTORY NO.

FIRST ANGLE PROJECTION

(ALL DIMENSIONS ARE IN mm)

DRG.NO. 3-61-062-00583

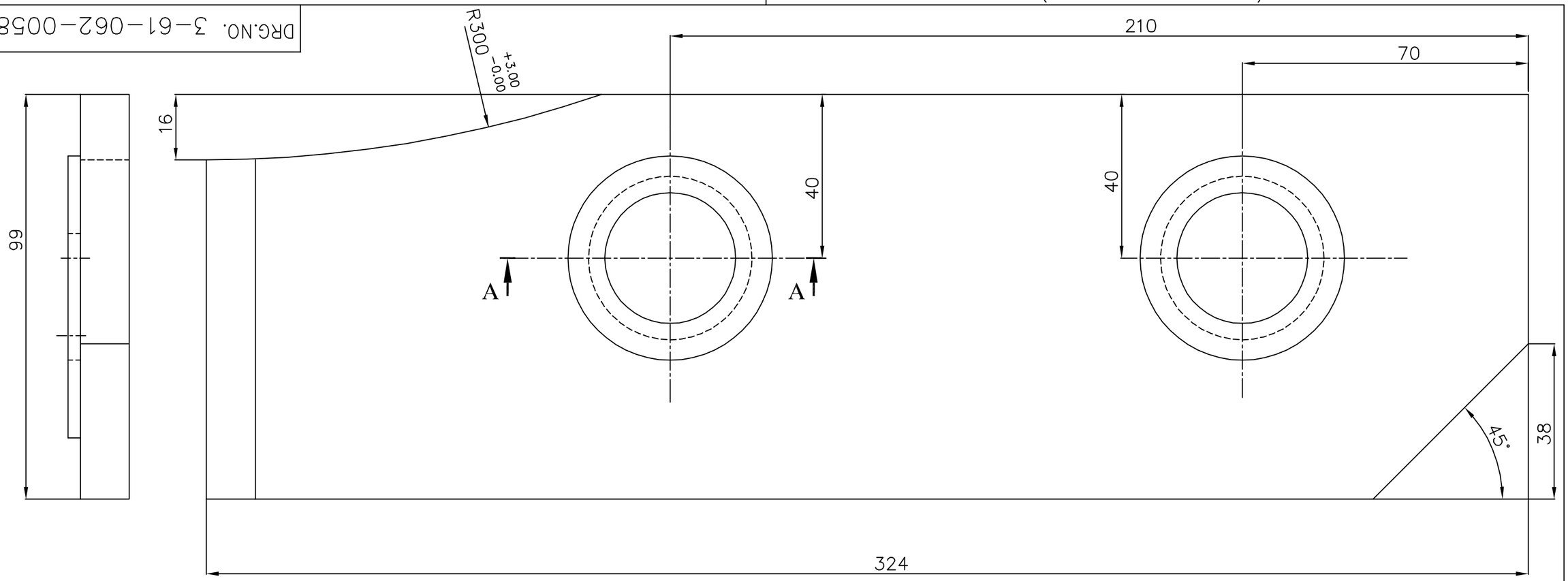

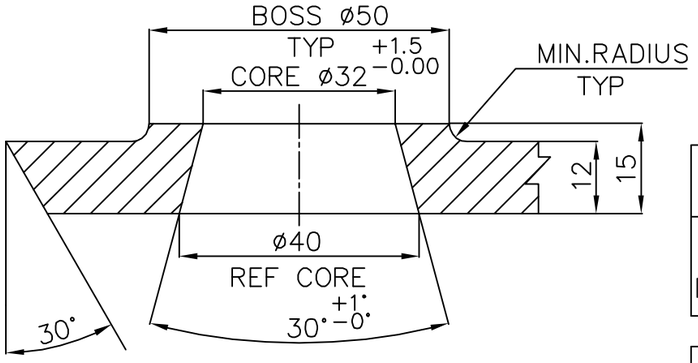

SECTION-AA

NOTE

1. BREAK ALL SHARP EDGES UNLESS OTHERWISE NOTED.
2. PATTERN NO.3-61-062-00583
3. CASTING TOLERANCE UNLESS OTHERWISE NOTED ±1.6

REV.	DATE	ALTERED		REV.	DATE	ALTERED	
05	17.10.03	CHECKED	APPD.	04	8.11.02	CHECKED	APPD.
2 CORED HOLES DELETED.				DRAWING REDRAWN.			

ITEM NO	DESCRIPTION	DRAWING NO.	VAR. NO.	RAW MATERIAL SIZE OR CASTING DRG.NO. OR FORGING DRG.NO.	MATERIAL CODE	NET WT.	GROSS WT.
01	CASTING				BA9114134020	2.60	
					AA19741	1	
					MATERIAL SPECN.	QUANTITY	

THE FOLLOWING CONDITIONS APPLY EXCEPT OTHERWISE STATED...

1. REF.TO HY0230261 FOR UNSPECIFIED TOLERANCES.
2. CHAMFER M/CD SHARP EDGES 1.2 TO 1.0 AT 45°.
3. INTERNAL M/CD CORNER RADII 1 TO 0.7.
4. THE SURFACE ROUGHNESS WHEREVER NOT SHOWN SHALL BE TAKEN FROM THE SURFACE ROUGHNESS SHOWN OUT SIDE BACK SLASHES GIVEN AT THE TOP MOST RIGHT CORNER OF THE DRG.

TYPE OF PRODUCT
OR
NAME OF CUSTOMER/PROJECT

बीएचईएल भारत हेवी इलेक्ट्रिकल्स लिमिटेड हैदराबाद
BHEL
BHARAT HEAVY ELECTRICALS LTD. HYDERABAD

	NAME	SIGN.	DATE	NO.OF VAR.
DRN.	RAZVI		8.11.02	
CHD.	NDSAMUEL		8.11.02	
APPD.	SGHATGE		8.11.02	

DEPT.		SCALE	WEIGHT (KG)	REF. TO ASSY DRG.	ITEM NO.	NO.OF ITEMS
CODE		1:1	2.60	1.61.062.0031	4	06

TITLE

JOURNAL HEAD LINER V

DRAWING NO. 3-61-062-00583 REV. 05

SHEET NO. NO OF SHEETS

THE INFORMATION ON THIS DOCUMENT IS THE PROPERTY OF BHARAT HEAVY ELECTRICALS LTD. IT MUST NOT BE USED DIRECTLY OR INDIRECTLY IN ANY WAY DETRIMENTAL TO THE INTEREST OF THE COMPANY.

COMP. FILE NAME 36100583.DWG

REF.DRG.NO.

INVENTORY NO.

TD-151/REV. 03 SIZE A3

FIRST ANGLE PROJECTION

(ALL DIMENSIONS ARE IN mm)

DRG.NO. 3-61-080-00390

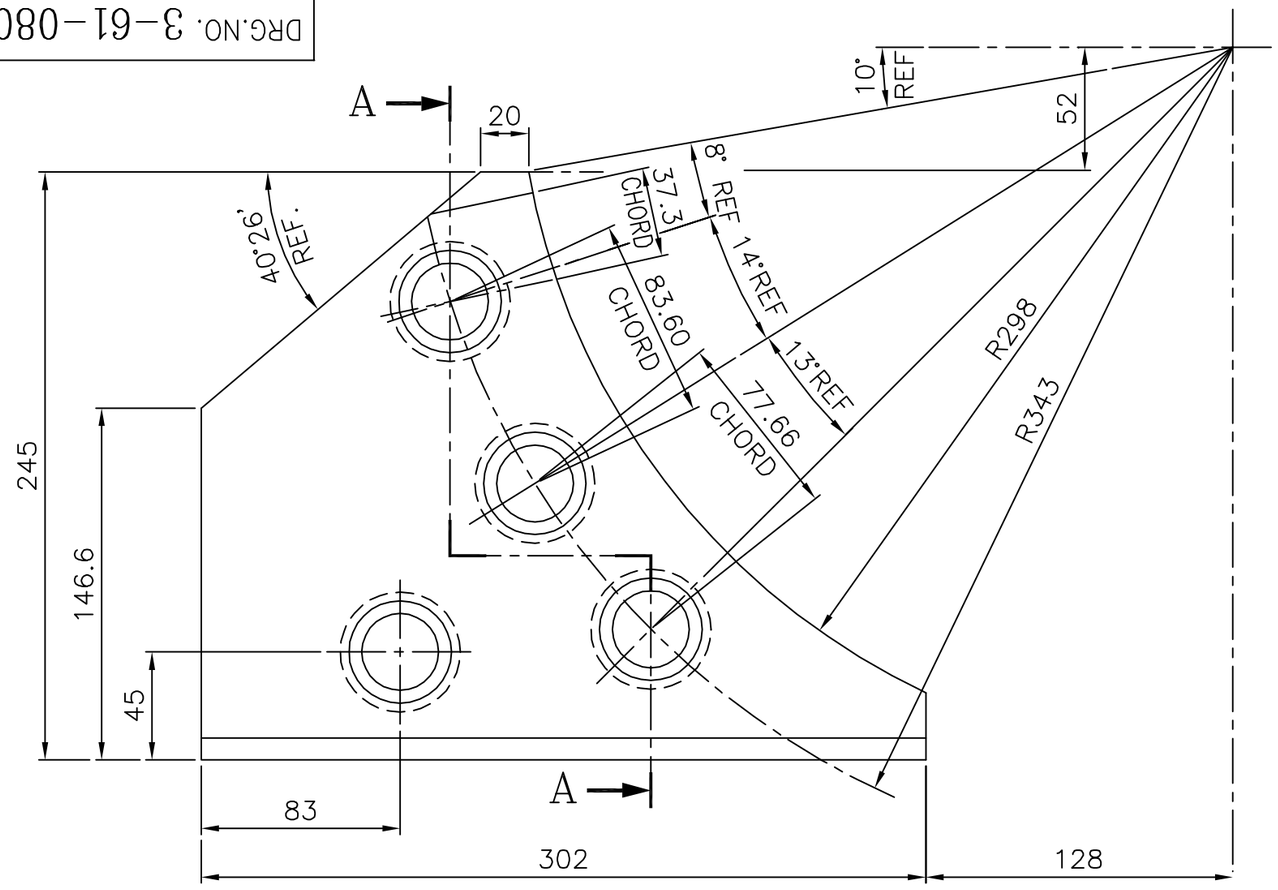

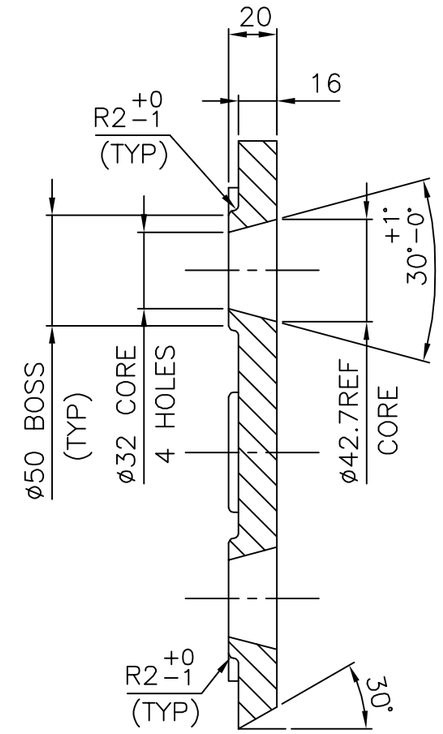

SECTION–AA

NOTES:–

01. BREAK ALL SHARP EDGES AND CORNERS.

ITEM NO	DESCRIPTION	DRAWING NO.	VAR. NO.	RAW MATERIAL SIZE OR CASTING DRG.NO. OR FORGING DRG.NO.	MATERIAL CODE / MATERIAL SPECN.	NET WT.	GROSS WT.
	CASTING				BA9114133717 / AA19741	5.60	

QUANTITY

THE FOLLOWING CONDITIONS APPLY EXCEPT OTHERWISE STATED...

1. REF.TO HY0230261 FOR UNSPECIFIED TOLERANCES.
2. CHAMFER M/CD SHARP EDGES 1.2 TO 1.0 AT 45°.
3. INTERNAL M/CD CORNER RADII 1 TO 0.7.
4. THE SURFACE ROUGHNESS WHEREVER NOT SHOWN SHALL BE TAKEN FROM THE SURFACE ROUGHNESS SHOWN OUT SIDE BACK SLASHES GIVEN AT THE TOP MOST RIGHT CORNER OF THE DRG.

TYPE OF PRODUCT OR NAME OF CUSTOMER/PROJECT

BHARAT HEAVY ELECTRICALS LTD. HYDERABAD

	NAME	SIGN.	DATE	NO.OF VAR.
DRN.	UNIC		24.01.97	NA
CHD.	B.M.R		27.01.97	
APPD.	KMR		27.01.97	

DEPT. PULV ENGG.	SCALE	WEIGHT (KG)	REF. TO ASSY DRG.	ITEM NO.	NO.OF ITEMS
CODE 446	1:2.5	5.60	(B-80-653-0) 1-61-080-00180	NA	03

TITLE

JOURNAL HEAD LINER II

DRAWING NO. 3-61-080-00390 REV. 03

SHEET NO. 01 NO OF SHEETS 01

REV.	DATE	ALTERED	CHD.	APPD.
03	24.1.97	UC		

ZONE

DRAWING REDRAWN BY INCORPORATING ALL PREVIOUS REV.

THE INFORMATION ON THIS DOCUMENT IS THE PROPERTY OF BHARAT HEAVY ELECTRICALS LTD. IT MUST NOT BE USED DIRECTLY OR INDIRECTLY IN ANY WAY DETRIMENTAL TO THE INTEREST OF THE COMPANY.

FILE NAME 36100390.DWG

REF.DRG.NO.

INVENTORY NO.

TD-151/REV. 03 SIZE A3

FIRST ANGLE PROJECTION

(ALL DIMENSIONS ARE IN mm)

DRG.NO. 3-61-080-00391

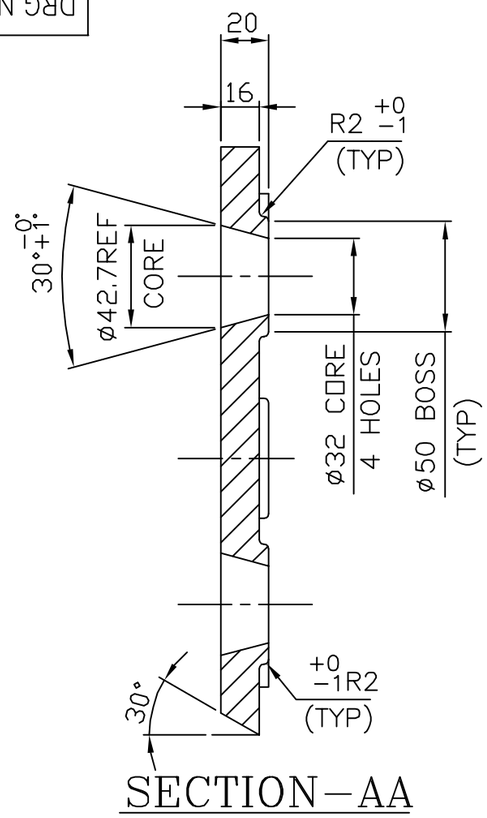

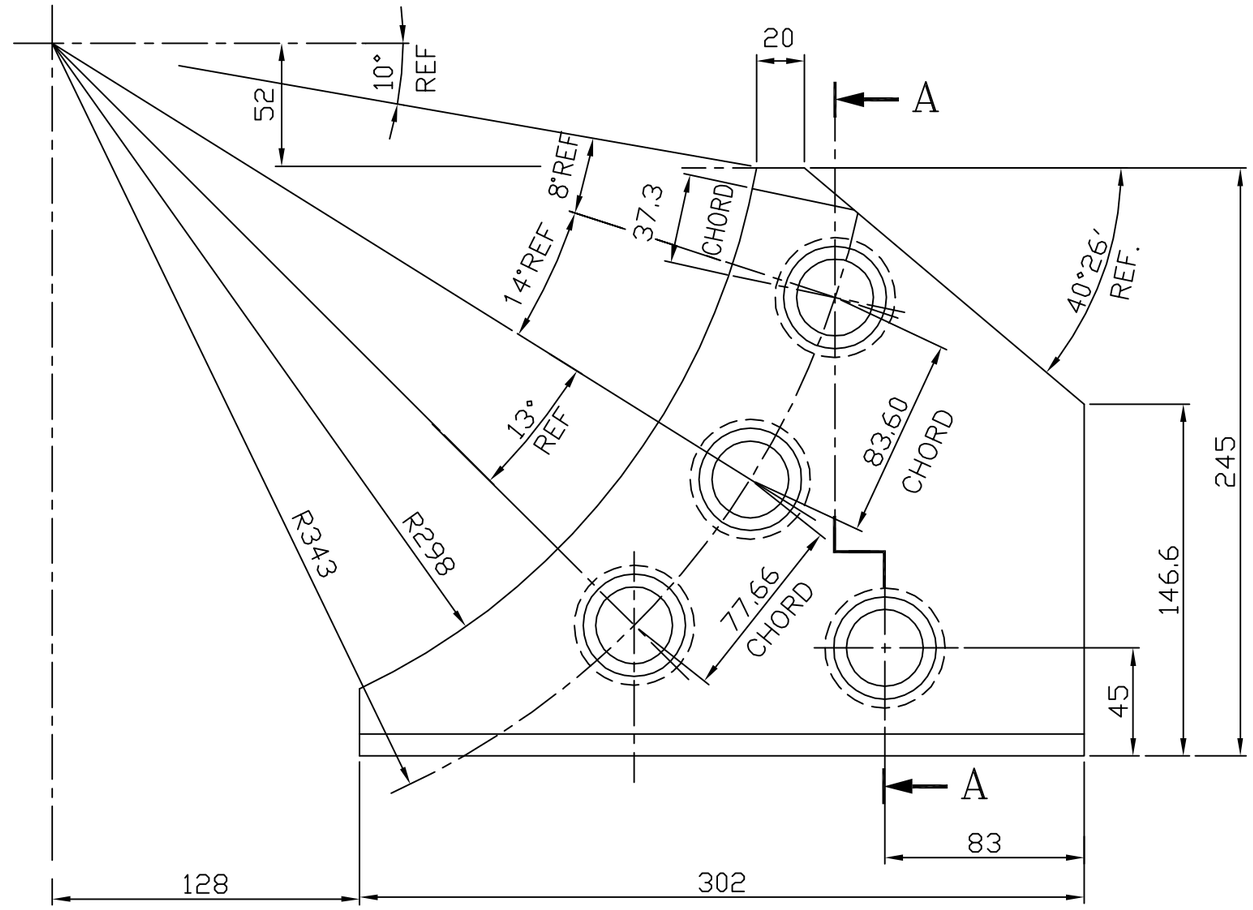

ITEM NO	DESCRIPTION	DRAWING NO.	VAR. NO.	RAW MATERIAL SIZE OR CASTING DRG.NO. OR FORGING DRG.NO.	MATERIAL CODE / MATERIAL SPECN.	NET WT.	GROSS WT.
	CASTING				BA9114133717 / AA19741	5.60	
					MATERIAL SPECN.	QUANTITY	

NOTES:−

01. BREAK ALL SHARP EDGES AND CORNERS.

02. TOLERANCE UNLESS OTHER WISE NOTED.

CASTING: ±1.6

ANGULAR: ±0°6′

THE FOLLOWING CONDITIONS APPLY EXCEPT OTHERWISE STATED...

1. REF.TO HY0230261 FOR UNSPECIFIED TOLERANCES.
2. CHAMFER M/CD SHARP EDGES 1.2 TO 1.0 AT 45°.
3. INTERNAL M/CD CORNER RADII 1 TO 0.7.
4. THE SURFACE ROUGHNESS WHEREVER NOT SHOWN SHALL BE TAKEN FROM THE SURFACE ROUGHNESS SHOWN OUT SIDE BACK SLASHES GIVEN AT THE TOP MOST RIGHT CORNER OF THE DRG.

TYPE OF PRODUCT
OR
NAME OF CUSTOMER/PROJECT

BHARAT HEAVY ELECTRICALS LTD.
HYDERABAD

	NAME	SIGN.	DATE	NO.OF VAR.
DRN.	RAZVI		23.3.04	NA
CHD.	AMMAN		23.3.04	
APPD.	S.GHATH		23.3.04	

DEPT. PULV ENGG.	SCALE	WEIGHT (KG)	REF. TO ASSY DRG.	ITEM NO.	NO.OF ITEMS
CODE 446	1:2.5	5.60	(B−80−652−0) 1−61−080−00180	NA	03

TITLE

JOURNAL HEAD LINER III

DRAWING NO. 3−61−080−00391 REV. 03

SHEET NO. 01 NO OF SHEETS 01

REV.	DATE	ALTERED	CHD.	APPD.
03	23.3.04	ALTERED RAZVI	CHD.	APPD.

ZONE

ZONE DRAWING REDRAWN ON AUTOCAD INCORPORATING EARLIEAR CHANGES

THE INFORMATION ON THIS DOCUMENT IS THE PROPERTY OF BHARAT HEAVY ELECTRICALS LTD.
IT MUST NOT BE USED DIRECTLY OR INDIRECTLY IN ANY WAY DETRIMENTAL TO THE INTEREST OF THE COMPANY.

FILE NAME 36100391.DWG

REF.DRG.NO.

INVENTORY NO.

TD−151/REV. 03 SIZE A3

FIRST ANGLE PROJECTION

(ALL DIMENSIONS ARE IN mm)

POORNIMA

DRG.NO. 3-61-080-00392

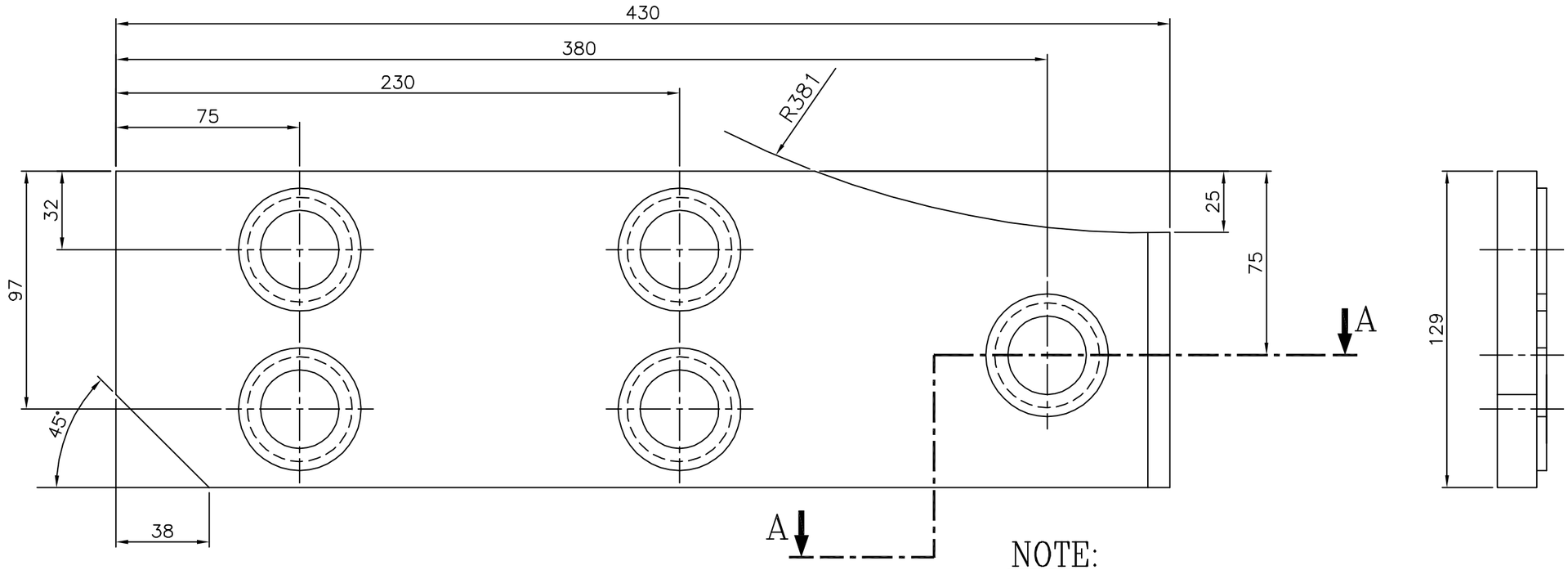

NOTE:

1. BREAK ALL SHARP EDGES AND CORNERS.
2. TOLERANCE, UNLESS OTHERWISE NOTED,
   CASTING : ±1.5
   ANGULAR : ±0°6'

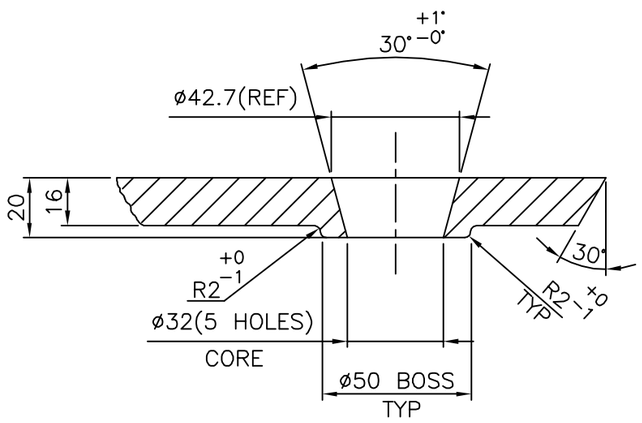

SECTION A–A

(SCALE 2:5)

ITEM NO	DESCRIPTION	DRAWING NO.	VAR. NO.	RAW MATERIAL SIZE OR CASTING DRG.NO. OR FORGING DRG.NO.	MATERIAL CODE / MATERIAL SPECN.	NET WT.	GROSS WT.
1	CASTING				BA9114133733 / AA19741	7.20 / 1	

THE FOLLOWING CONDITIONS APPLY EXCEPT OTHERWISE STATED...

1. REF.TO HY0230261 FOR UNSPECIFIED TOLERANCES.
2. CHAMFER M/CD SHARP EDGES 1.2 TO 1.0 AT 45°.
3. INTERNAL M/CD CORNER RADII 1 TO 0.7.
4. THE SURFACE ROUGHNESS WHEREVER NOT SHOWN SHALL BE TAKEN FROM THE SURFACE ROUGHNESS SHOWN OUT SIDE BACK SLASHES GIVEN AT THE TOP MOST RIGHT CORNER OF THE DRG.

TYPE OF PRODUCT
OR
NAME OF CUSTOMER/PROJECT

BHARAT HEAVY ELECTRICALS LTD.
HYDERABAD

	NAME	SIGN.	DATE	NO.OF VAR.
DRN.	ASHOK		06.06.84	NA
CHD.	AMAN		02.08.84	
APPD.	S.G		12.11.84	

DEPT.	CODE	SCALE	WEIGHT (KG)	REF. TO ASSY DRG.	ITEM NO.	NO.OF ITEMS
PULV–ENGG	4460	1:2 2:5	7.20	(B–80–651–0) 1–61–080–00180	05	NA

TITLE

JOURNEL HEAD LINER IV

DRAWING NO. 3–61–080–00392 REV. 04

SHEET NO. 01 NO OF SHEETS 01

REV.	DATE	ALTERED	CHECKED	APPD.
04	10.05.05	DRAWING IS REDRAWN ON ACAD INCORPORATING ALL PREVIOUS REVISIONS.		

INVENTORY NO.

REF.DRG.NO.

COMP. FILE NAME 36100392.DWG

THE INFORMATION ON THIS DOCUMENT IS THE PROPERTY OF BHARAT HEAVY ELECTRICALS LTD. IT MUST NOT BE USED DIRECTLY OR INDIRECTLY IN ANY WAY DETRIMENTAL TO THE INTEREST OF THE COMPANY.

TD–151/REV. 03 SIZE A3

FIRST ANGLE PROJECTION

(ALL DIMENSIONS ARE IN mm)

POORNIMA

DRG.NO. 3-61-080-00393

THE INFORMATION ON THIS DOCUMENT IS THE PROPERTY OF BHARAT HEAVY ELECTRICALS LTD.
IT MUST NOT BE USED DIRECTLY OR INDIRECTLY IN ANY WAY DETRIMENTAL TO THE INTEREST OF THE COMPANY.

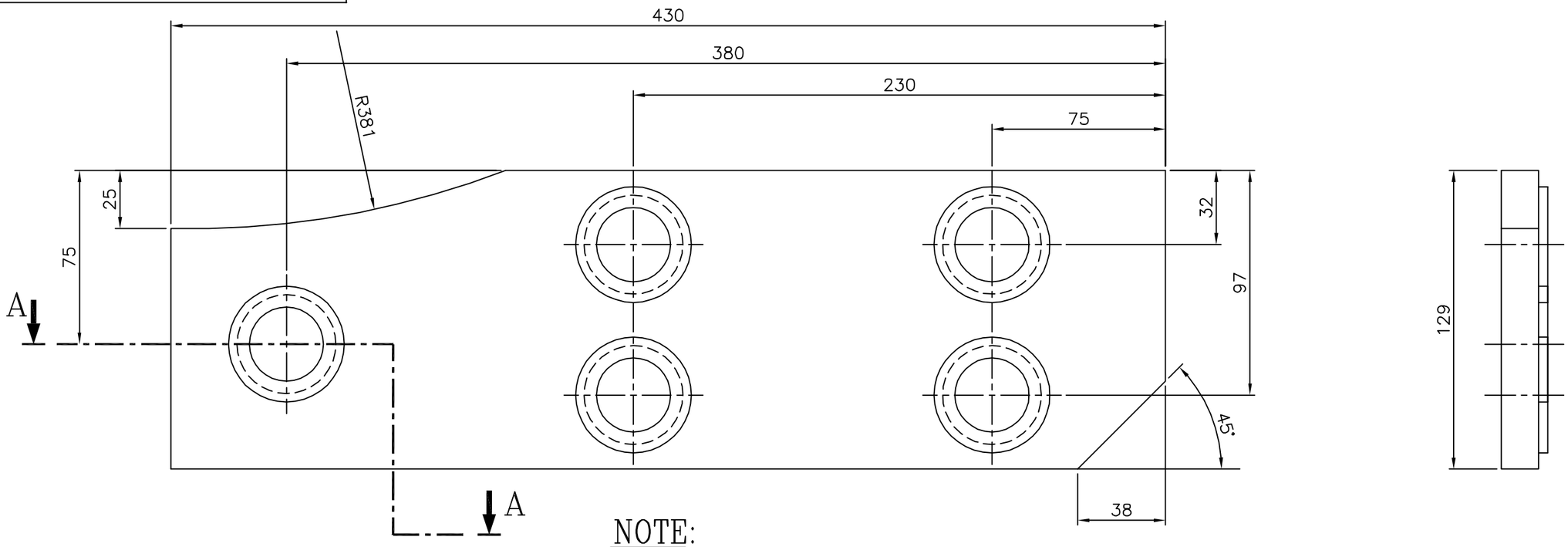

NOTE:

1. BREAK ALL SHARP EDGES AND CORNERS.
2. TOLERANCE, UNLESS OTHERWISE NOTED,
   CASTING : ±1.5
   ANGULAR : ±0°6'

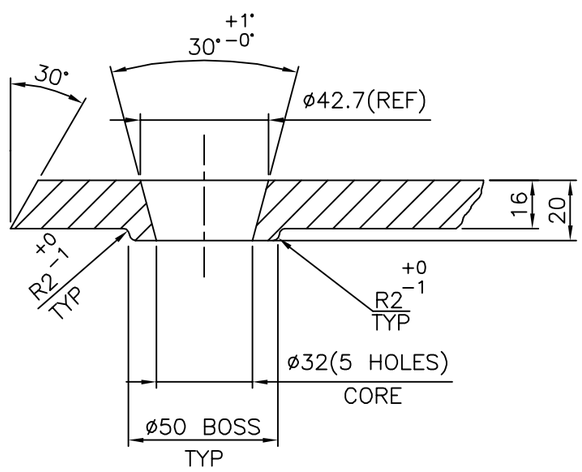

SECTION A–A

(SCALE 2:5)

ITEM NO	DESCRIPTION	DRAWING NO.	VAR. NO.	RAW MATERIAL SIZE OR CASTING DRG.NO. OR FORGING DRG.NO.	MATERIAL CODE / MATERIAL SPECN.	NET WT.	GROSS WT.
	CASTING				BA9114133741 / AA19741	7.20	

QUANTITY

THE FOLLOWING CONDITIONS APPLY EXCEPT OTHERWISE STATED...

1. REF.TO HY0230261 FOR UNSPECIFIED TOLERANCES.
2. CHAMFER M/CD SHARP EDGES 1.2 TO 1.0 AT 45°.
3. INTERNAL M/CD CORNER RADII 1 TO 0.7.
4. THE SURFACE ROUGHNESS WHEREVER NOT SHOWN SHALL BE TAKEN FROM THE SURFACE ROUGHNESS SHOWN OUT SIDE BACK SLASHES GIVEN AT THE TOP MOST RIGHT CORNER OF THE DRG.

TYPE OF PRODUCT
OR
NAME OF CUSTOMER/PROJECT

BHARAT HEAVY ELECTRICALS LTD.
HYDERABAD

	NAME	SIGN.	DATE	NO.OF VAR.
DRN.	ASHOK		06.06.84	NA
CHD.	AMAN		02.08.84	
APPD.	S.G		12.11.84	

DEPT. PULV–ENGG	SCALE	WEIGHT (KG)	REF. TO ASSY DRG.	ITEM NO.	NO.OF ITEMS
CODE 4460	1:2 2:5	7.20	1–61–080–00180 (B–80–650–0)	06	NA

TITLE
JOURNEL HEAD LINER V

DRAWING NO. 3–61–080–00393 REV. 04

SHEET NO. 01 NO OF SHEETS 01

REV.	DATE	ALTERED	CHECKED	APPD.
04	10.05.05			

DRAWING IS REDRAWN ON ACAD INCORPORATING ALL PREVIOUS REVISIONS.

COMP. FILE NAME 36100393.DWG

REF.DRG.NO.

INVENTORY NO.

TD–151/REV. 03 SIZE A3

FIRST ANGLE PROJECTION

(ALL DIMENSIONS ARE IN mm)

DRG. NO. 3 - 61 - 304 - 02337

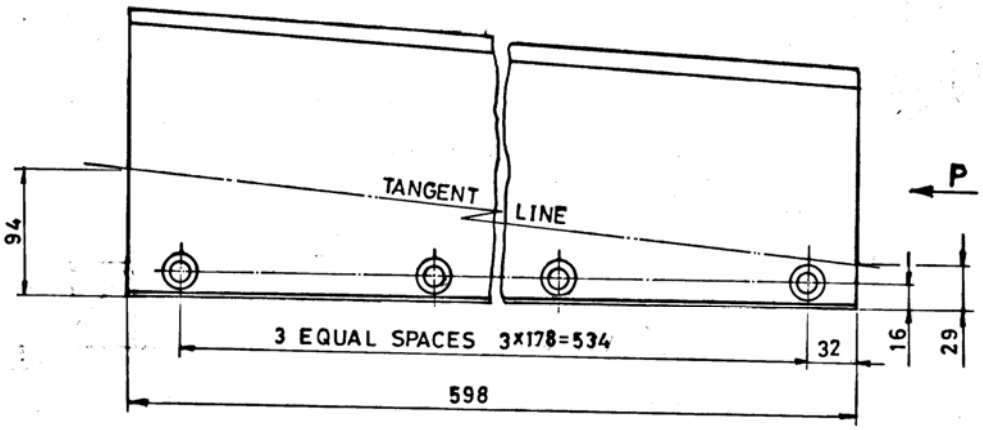

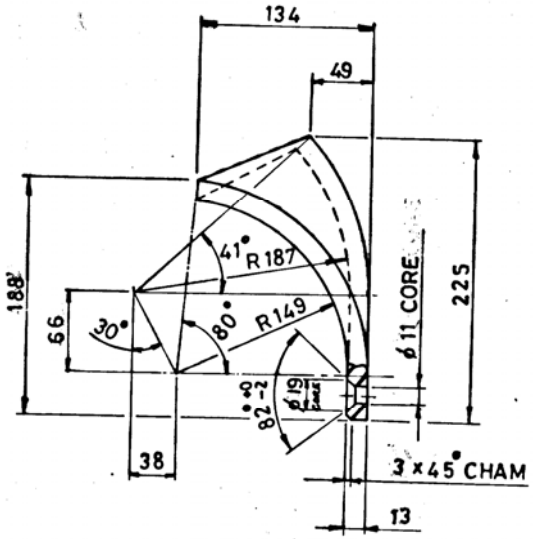

VIEW-P

NOTE:

1. BREAK ALL SHARP EDGES AND CORNERS.
2. CORED HOLES ARE TO BE CLEANED AND FREE FROM FINS AND SAND.
3. DIMENSIONS & LOCATIONS OF THE CORED HOLES ARE TO BE ENSURED WITH A TEMPLATE.

REFER PLANT STANDARD HY 0230261 FOR UNSPECIFIED TOLERANCES

VAR. 00	REMARKS	VAR. NO.	ITEM NO.	DESCRIPTION	STD.	DRAWING NO.					
				CASTING			BA9114103079			13.00	
							AA19741				
28 → CARD TYPE-3				28 → CARD TYPE-2			IT NO. / VAR.	MATL. CODE / MATL. SPCN.	A/C	UNIT WT. / QTY.	GS / ZONE
										28 → CARD TYPE-1	

ADDITIONAL INFORMATION

STATUS OF DRAWING

DISTRIBUTION OF PRINTS

TYPE OF PRODUCT OR NAME OF CUSTOMER/PROJECT: CHANDRAPUR 500 MW

BHARAT HEAVY ELECTRICALS LTD. HYDERABAD

	NAME	SIGN.	DATE
DRN.	D C		
CHD.	SAMUEL		30-8-93
APPD.	Y.S.L.RAO		30/8/93

NO OF VAR.

DEPT.	GRADE OF TOL. DIM.		SCALE	WEIGHT (Kg)	REF. TO ASSY. DRG.	ITEM NO.	NO. OF ITEMS
PULV ENG CODE 446	C/M/F		NTS	13.00	C GP-2959		

TITLE: DEFLECTOR BLADE

CARD CODE

DRAWING NO. 3-61-304-02337 REV. 00

SHEET NO. 01 NO. OF SHEETS 01

REV.	DATE	ALTERED / CHECKED	REV.	DATE	ALTERED / CHECKED	REV.	DATE	ALTERED / CHECKED
ZONE			ZONE			ZONE		

INVENTORY NO. | SIGN. & DATE | REF. DRG. NO.

THE INFORMATION ON THIS DOCUMENT IS THE PROPERTY OF BHARAT HEAVY ELECTRICALS LIMITED
IT MUST NOT BE USED DIRECTLY OR INDIRECTLY IN ANY WAY DETRIMENTAL TO THE INTEREST OF THE COMPANY

TD-151, REV. NO. 2

SIZE A 3

FIRST ANGLE PROJECTION

(ALL DIMENSIONS ARE IN mm)

DRG.NO. 3-61-362-00653

WPS No. WE 006

12.5 / 6.3 / 1.6

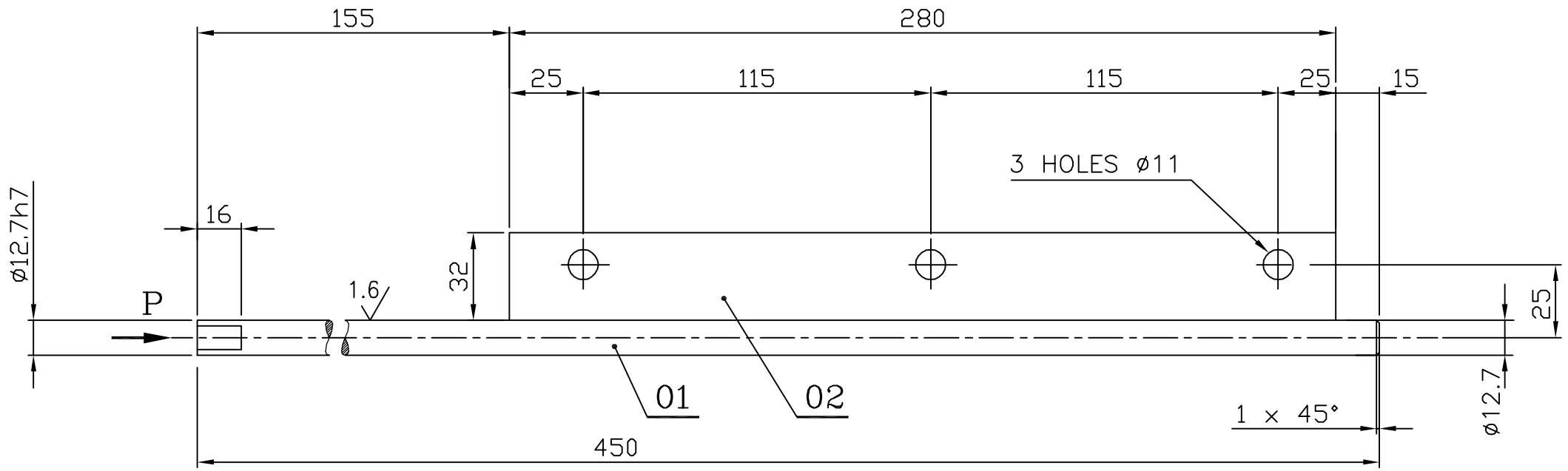

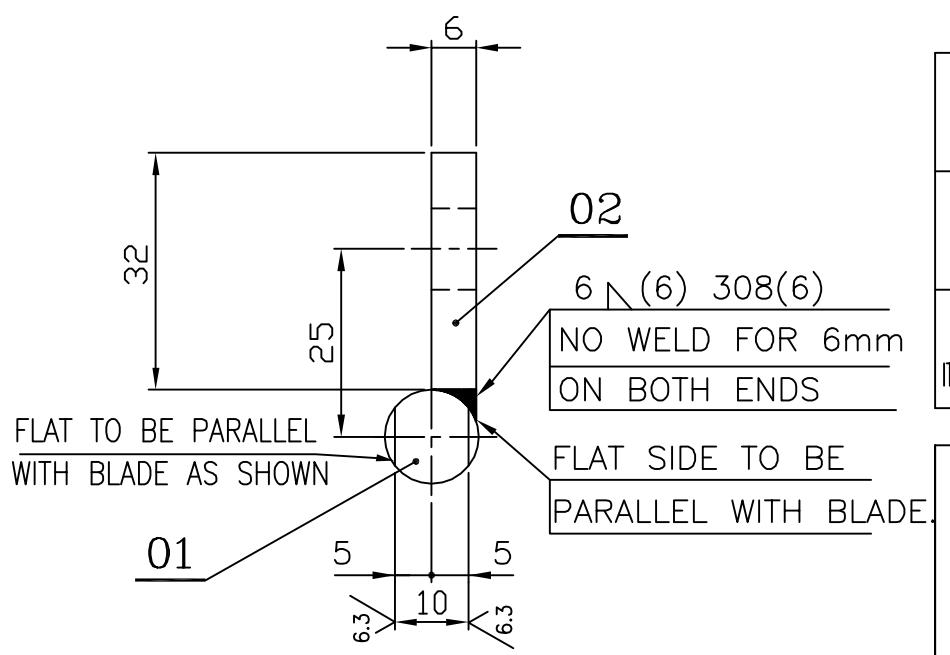

VIEW-P

ITEM NO	DESCRIPTION	DRAWING NO.	VAR. NO.	RAW MATERIAL SIZE OR CASTING DRG.NO. OR FORGING DRG.NO.	MATERIAL CODE / MATERIAL SPECN.	NET WT. / QUANTITY	GROSS WT.
02	PL. 6x32x280				AA 1011808030	0.420	
					AA 10108	1	
01	ROD ø16x455				HY 1010299086	0.440	
					HY 10199	1	

THE FOLLOWING CONDITIONS APPLY EXCEPT OTHERWISE STATED...

1. REF.TO HY0230261 FOR UNSPECIFIED TOLERANCES.
2. CHAMFER M/CD SHARP EDGES 1.2 TO 1.0 AT 45°.
3. INTERNAL M/CD CORNER RADII 1 TO 0.7.
4. THE SURFACE ROUGHNESS WHEREVER NOT SHOWN SHALL BE TAKEN FROM THE SURFACE ROUGHNESS SHOWN OUT SIDE BACK SLASHES GIVEN AT THE TOP MOST RIGHT CORNER OF THE DRG.

REV.	DATE	ALTERED	CHD.	APPD.
02	22.12.03	ZONE ø8X12 STEP REMOVED. ø12.7 h7 WAS ø12.7±0.01.	N.D.S	S.G
01	2.11.02	ZONE DRG.RETRACED.	N.D.S	S.G

ALTERED E.M.ASHOK

TYPE OF PRODUCT
OR
NAME OF CUSTOMER/PROJECT

BHARAT HEAVY ELECTRICALS LTD.
HYDERABAD

	NAME	SIGN.	DATE	NO.OF VAR.
DRN.	E.M.ASHOK		2.11.02	NA
CHD.	N.S.D		2.11.02	
APPD.	S.G		2.11.02	

DEPT.	CODE	SCALE	WEIGHT (KG)	REF. TO ASSY DRG.	ITEM NO.	NO.OF ITEMS
B.M.D	446	N.T.S	0.860		NA	NA

TITLE

DEFLECTOR HINGED SHAFT

DRAWING NO. 3-61-362-00653 REV. 02

SHEET NO. 01 NO OF SHEETS 01

TD-151/REV. 03 SIZE A3

THE INFORMATION ON THIS DOCUMENT IS THE PROPERTY OF BHARAT HEAVY ELECTRICALS LTD.
IT MUST NOT BE USED DIRECTLY OR INDIRECTLY IN ANY WAY DETRIMENTAL TO THE INTEREST OF THE COMPANY.

FILE NAME 36100653.DWG

REF.DRG.NO.

INVENTORY NO.

FIRST ANGLE PROJECTION

(ALL DIMENSIONS ARE IN mm)

DRG.NO. 3-61-380-00375

THE INFORMATION ON THIS DOCUMENT IS THE PROPERTY OF BHARAT HEAVY ELECTRICALS LTD.
IT MUST NOT BE USED DIRECTLY OR INDIRECTLY IN ANY WAY DETRIMENTAL TO THE INTEREST OF THE COMPANY.

36100375.DWG FILE NAME

3-61-380-00376 REF.DRG.NO.

INVENTORY NO.

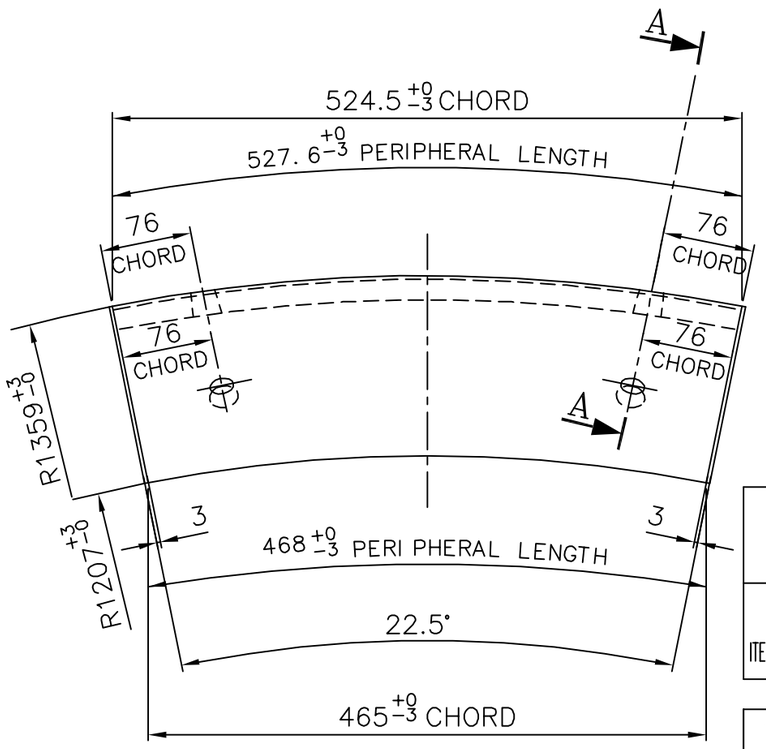

CAST PATTERN NO. 3-61-380-00375
THIS SIDE 3mm MAX. HEIGHT
IF RAISED LETTERS ARE USED

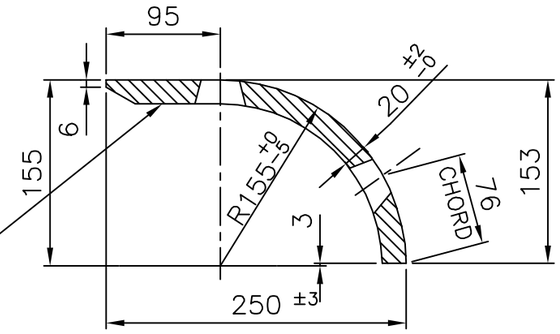

SECTION-AA

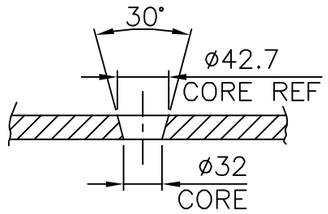

SECTION-BB
(4 PLACES)

NOTES:-

01. BREAK ALL SHARP EDGES & CORNERS UNLESS OTHERWISE NOTED.

ITEM NO	DESCRIPTION	DRAWING NO.	VAR. NO.	RAW MATERIAL SIZE OR CASTING DRG.NO. OR FORGING DRG.NO.	MATERIAL CODE / MATERIAL SPECN.	NET WT.	GROSS WT.
	SEPARATOR TOP LINER (CASTING)				BA9114133474 / AA19741	25.10	
					QUANTITY		

THE FOLLOWING CONDITIONS APPLY EXCEPT OTHERWISE STATED...

1. REF.TO HY0230261 FOR UNSPECIFIED TOLERANCES.
2. CHAMFER M/CD SHARP EDGES 1.2 TO 1.0 AT 45°.
3. INTERNAL M/CD CORNER RADII 1 TO 0.7.
4. THE SURFACE ROUGHNESS WHEREVER NOT SHOWN SHALL BE TAKEN FROM THE SURFACE ROUGHNESS SHOWN OUT SIDE BACK SLASHES GIVEN AT THE TOP MOST RIGHT CORNER OF THE DRG.

REV.	DATE	ALTERED	CHD.	APPD.	REV.	DATE	ALTERED UC	CHD.	APPD.
					03	06.08.97			
ZONE					ZONE	DRAWING REDRAWN BY INCORPORATING THE PREVIOUS REV.			

TYPE OF PRODUCT
OR
NAME OF CUSTOMER/PROJECT

BHARAT HEAVY ELECTRICALS LTD.
HYDERABAD

	NAME	SIGN.	DATE	NO.OF VAR.
DRN.	UNIC		05.08.97	
CHD.	B.M.R		10.09.97	
APPD.	K.M.R		10.09.97	

DEPT. PULV ENGG.	SCALE	WEIGHT (KG)	REF. TO ASSY DRG.	ITEM NO.	NO.OF ITEMS
CODE 446	1:5	2510	(C-80-481-0)		01

TITLE
SEPARATOR TOP LINER

DRAWING NO. 3-61-380-00375 REV. 03

SHEET NO. 01 NO OF SHEETS 01

TD-151/REV. 03 SIZE A3

FIRST ANGLE PROJECTION

(ALL DIMENSIONS ARE IN mm)

DRG. NO. 3-61-388-02015

CAST PART INFORMATION ON THIS SURFACE LETTER SIZE 10mm

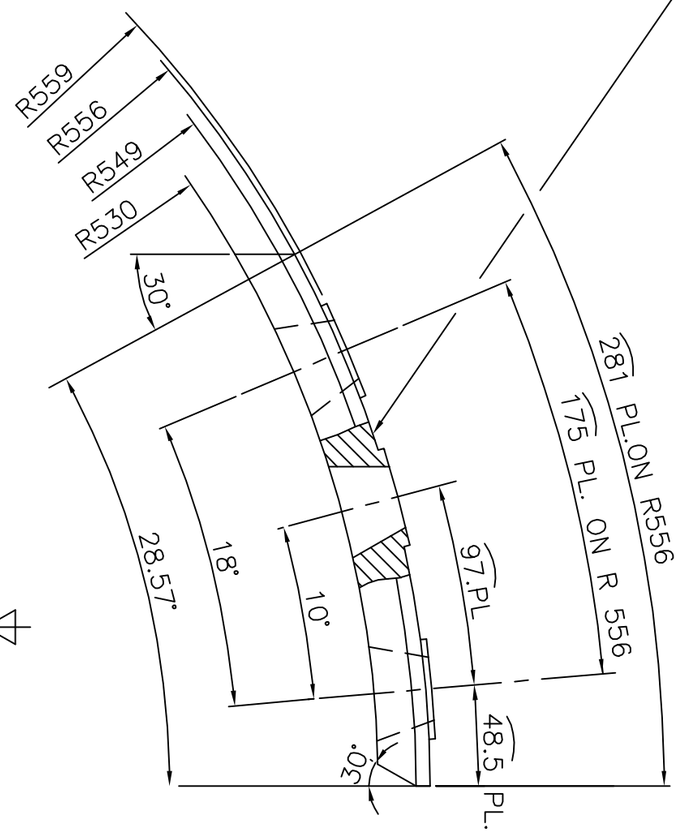

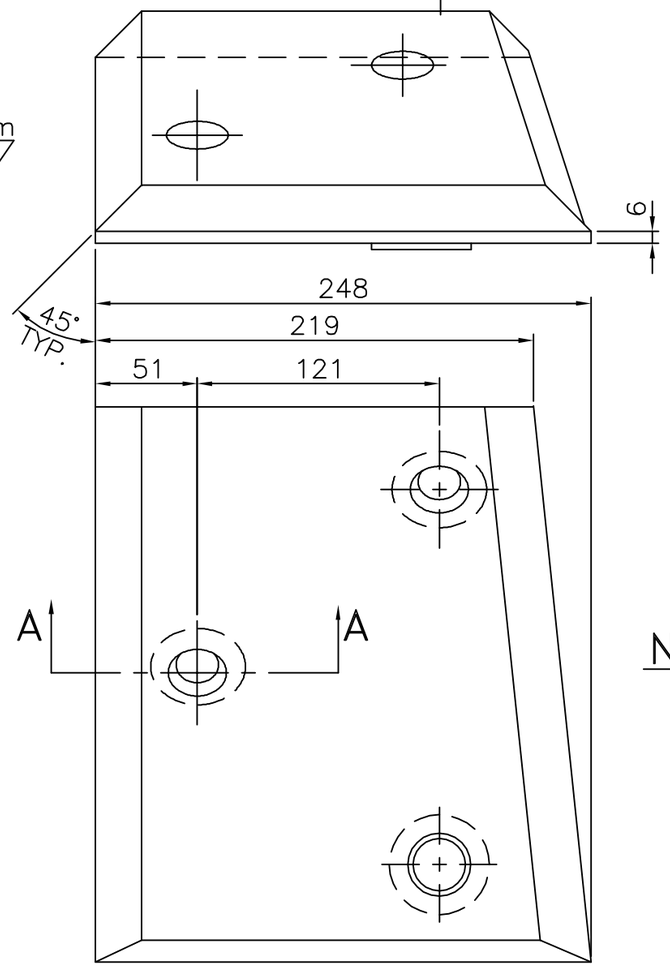

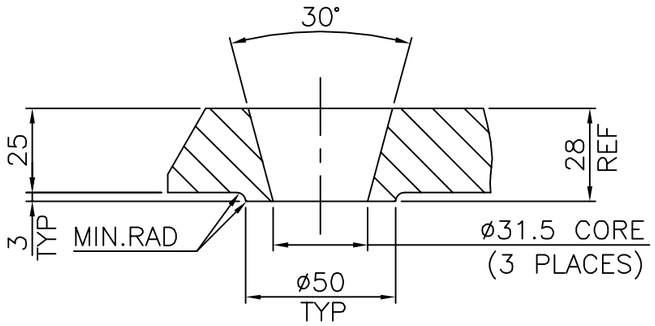

SECTION-AA

NOTE:-

1. ALL RADII TO BE R1.5 UNLESS OTHERWISE SPECIFIED
2. CASTING TOL.SHOULD BE WITHIN $^{+0.0}_{-1.6}$
   ANGULER 0°6'
3. PATTERN NO.3-61-388-02015
4. BREAK ALL SHARP EDGES & CORNERS UNLESS OTHERWISE NOTED.

ITEM NO.	DESCRIPTION	DRAWING NO.	VAR. NO.	RAW MATERIAL SIZE OR CASTING DRG. NO. OR FORGING DRG. NO.	MATERIAL CODE / MATERIAL SPECN.	NET WT. / QUANTITY	GROSS WT.
01	CASTING				BA9114134802 / AA19741	1	12.60

THE FOLLOWING CONDITIONS APPLY EXCEPT OTHERWISE STATED.

1. REF. TO HY0230261 FOR UNSPECIFIED TOLERANCES.
2. CHAMFER M/CD. SHARP EDGES 1.2 TO 1.0 AT 45°.
3. INTERNAL M/CD. CORNER RADII 1 TO 0.7
4. THE SURFACE ROUGHNESS WHERE-EVER NOT SHOWN SHALL BE TAKEN FROM THE SURFACE ROUGHNESS SHOWN OUT SIDE THE BACK SLASH GIVEN OR THE TOP MOST RIGHT CORNER OF THE DRG.

TYPE OF PRODUCT
NAME OF CUSTOMER/PROJECT: 883 XRP BOWL MILL

BHARAT HEAVY ELECTRICALS LIMITED
HYDERABAD

	NAME	SIGN.	DATE	NO.OF VAR.
DRN.	SCS/ACAD		30.09.03	
CHD.	GSNMR		30.09.03	
APPD.	TMRAO			

DEPT.	UNTOL. DIMS. GR.	SCALE	WEIGHT (KG)	REF. TO ASSY DRG.	ITEM NO.	NO.OF ITEMS
PULV ENGG. CODE 446	¢/M/f	NTS	12.6	2-61-388-02109	9	15

TITLE: JOURNAL OPENING FRAME LINER

DRAWING NO. 3-61-388-02015 REV. 01

SHEET NO. 01 NO OF SHEETS 01

REV.	DATE	ALTERED	REV.	DATE	ALTERED
		CHD/APPD	01	30.09.03	SCS / CHD/APPD GSNMR/TMRAO
ZONE			ZONE		DRG.REDRAW IN ACAD.

INVENTORY NO | SIGN. AND DATE | REF. DRG. NO. B-94-552/2 | COMPUTER FILE NAME 3613880201 5.DWG

THE INFORMATION ON THIS DOCUMENT IS THE PROPERTY OF BHARAT HEAVY ELECTRICALS LIMITED. IT MUST NOT BE USED DIRECTLY OR INDIRECTLY IN ANY WAY DETRIMENTAL TO THE INTEREST OF THE COMPANY

FIRST ANGLE PROJECTION

(ALL DIMENSIONS ARE IN mm)

DRG. NO. 3-61-388-02019

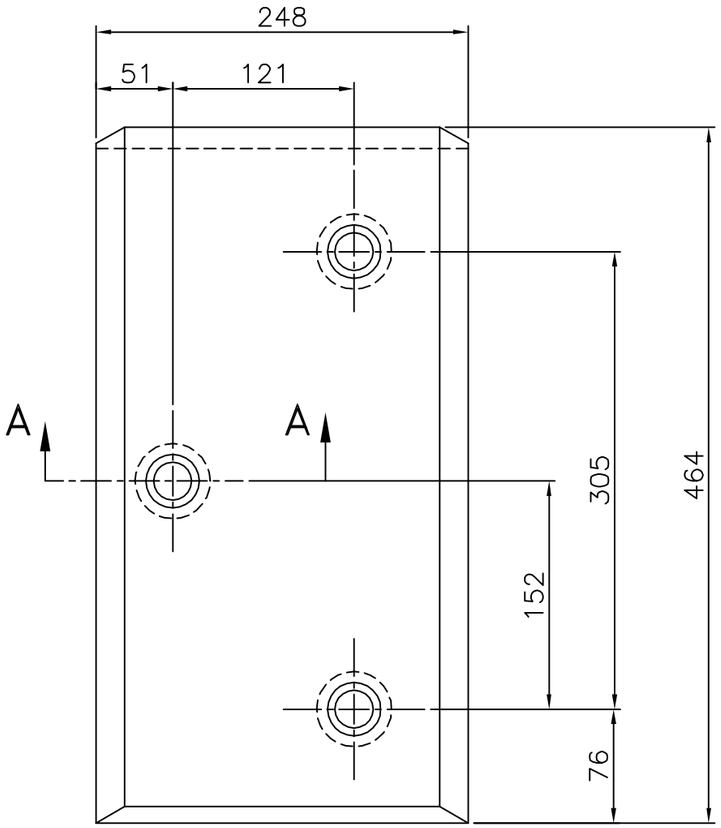

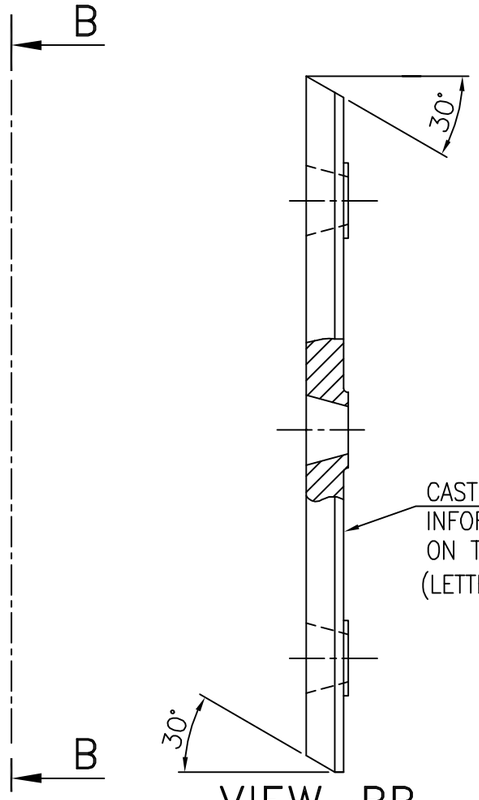

VIEW-BB

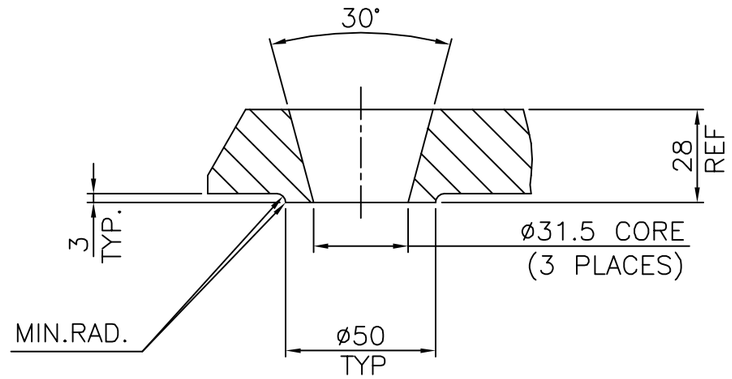

SECTION-AA

CAST PART INFORMATION ON THIS SURFACE. (LETTER SIZE 10mm)

NOTE:-

1. ALL RADII TO BE R1.5 UNLESS OTHERWISE SPECIFIED.
2. CASTING TOL.SHOULD BE WITH IN +0.0 −1.6 ANGULER 0°6'
3. PATTERN NO. 3-61-388-02019.
4. BREAK ALL SHARP EDGES & CORNERS UNLESS OTHERWISE NOTED.

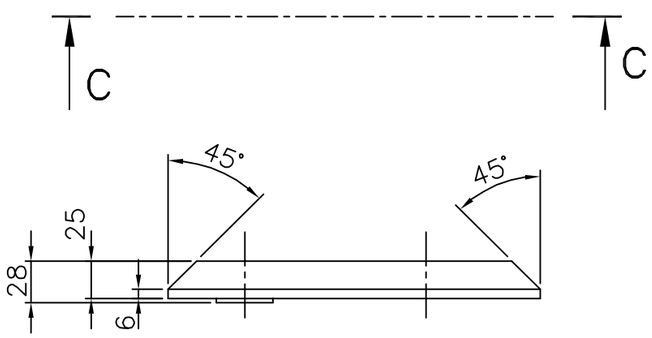

VIEW-CC

ITEM NO.	DESCRIPTION	DRAWING NO.	VAR. NO.	RAW MATERIAL SIZE OR CASTING DRG. NO. OR FORGING DRG. NO.	MATERIAL CODE / MATERIAL SPECN.	NET WT. / QUANTITY	GROSS WT.
01	CASTING				BA9114134845 / AA19741	22.0 / 1	

THE FOLLOWING CONDITIONS APPLY EXCEPT OTHERWISE STATED.

1. REF. TO HY0230261 FOR UNSPECIFIED TOLERANCES.
2. CHAMFER M/CD. SHARP EDGES 1.2 TO 1.0 AT 45°.
3. INTERNAL M/CD. CORNER RADII 1 TO 0.7
4. THE SURFACE ROUGHNESS WHERE-EVER NOT SHOWN SHALL BE TAKEN FROM THE SURFACE ROUGHNESS SHOWN OUT SIDE THE BACK SLASH GIVEN OR THE TOP MOST RIGHT CORNER OF THE DRG.

TYPE OF PRODUCT

NAME OF CUSTOMER/PROJECT 883 XRP BOWL MILL

BHARAT HEAVY ELECTRICALS LIMITED
HYDERABAD

	NAME	SIGN.	DATE	NO.OF VAR.
DRN.	SCS/ACAD		30.09.03	
CHD.	GSNMR		30.09.03	
APPD.	TMRAO			

DEPT.	UNTOL. DIMS. GR.		SCALE	WEIGHT (KG)	REF. TO ASSY DRG.	ITEM NO.	NO.OF ITEMS
PULV ENGG. CODE 446	¢/M/¢		1:4	22.00	2-61-388-02109	3	15

TITLE JOURNAL OPENING FRAME LINER-III

DRAWING NO. 3-61-388-02019 REV. 01

SHEET NO. 01 NO OF SHEETS 01

REV.	DATE	ALTERED	REV.	DATE	ALTERED
		CHD/APPD	01	30.09.03	SCS CHD/APPD GSNMR/TMRAO
ZONE			ZONE		DRG.REDRAWN IN CAD.

INVENTORY NO | SIGN. AND DATE | REF. DRG. NO. B-94-1045/0 | COMPUTER FILE NAME 3613880201 9.DWG

THE INFORMATION ON THIS DOCUMENT IS THE PROPERTY OF BHARAT HEAVY ELECTRICALS LIMITED. IT MUST NOT BE USED DIRECTLY OR INDIRECTLY IN ANY WAY DETRIMENTAL TO THE INTEREST OF THE COMPANY

1. PRIOR TO WELDING, PROPER SURFACE PREPARATION OF THE BASE METAL MUST BE MADE. WIRE BRUSHING OR GRINDING MAY BE USED TO REMOVE ANY RUST, SCALE, SLAG, PAINT OR OTHER FOREIGN MATTER.

2. ALL WELDERS USED TO INSTALL THESE PLUG WELDS MUST DEMONSTRATE THE ABILITY TO MAKE SOUND WELDS BY WELDING THREE (3) TEST PLUGS. THE WELDS SHOULD BE EXAMINED BY SECTIONING THROUGH EACH WELD. EACH SECTION SHALL BE POLISHED AND ETCHED AND EXAMINED FOR ADEQUATE FUSION: NO LACK OF FUSION WILL BE ALLOWED.

3. PLUGS MUST BE LIGHTLY SEATED INTO THE LINER TO ENSURE THAT THEY DO NOT FALL OUT DURING HANDLING. DO NOT FORCE THE PLUG TO BOTTOM OUT IN THE LINER. THIS CAN CAUSE LINER BREAKAGE.

4. IT IS RECOMMENDED THAT THE SHIELDED METAL ARC PROCESS BE USED. A 3/32" DIA. E-6010 ELECTRODE IS RECOMMENDED FOR MAXIMUM PENETRATION. RECOMMENDED AMPERAGE 80-90 AMPS, 18-26 VOLTS (USE THE HIGH AMPERAGE RANGE FOR THIS ELECTRODE).

NOTE:- THIS DRG. IS SUPPLIMENTARY TO DRG. NO. 4-61-080-00610

GENERAL DIMENSIONS, LIMITS FITS & TOLERANCES AS PER PS. HY 0230261

KORBA-6

PREPARED	VR PANNEERSELVAM	APPROVED	PVS.	MILLS DESIGN
CHECKED	K.M. RAO	DATE		

TITLE APPLICATION OF WELD PLUGS	DWG NO 4-61-080-00797	REV

FIRST ANGLE PROJECTION

ALL DIMENSIONS ARE IN mm.

DJC

REV.	DATE		REV.	DATE		REV.	DATE	
03	09.10.98	ALTERED	04	19.10.05	ALTERED			ALTERED
		CHECKED			CHECKED			CHECKED
		APPROVED			APPROVED V.KUMAR			APPROVED
DRAWING REDRAWN ON CAD INCORPORATING ALL THE PREVIOUS REVISIONS.			ø30 WAS ø33. AND ø40 WAS ø43.7 ANGLE 28° WAS 30°. DEV. LENGTH CHANGED. REVISION MADE AS PER SHOP FEEDBACK					

NOTES:-

1. BREAK ALL SHARP EDGES AND CORNERS UNLESS OTHERWISE NOTED.
2. TOLERANCES UNLESS OTHERWISE UNLESS OTHERWISE SPECIFIED
   DECIMAL ± 0.13 mm.
   ANGULAR ± 0°-6'

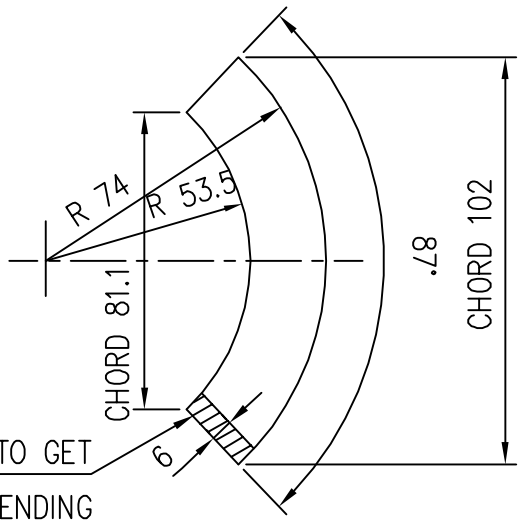

12.5

CUT OFF THE HATCHED PORTION TO GET A GAP OF 6 mm. AFTER BENDING

DEVELOPED VIEW

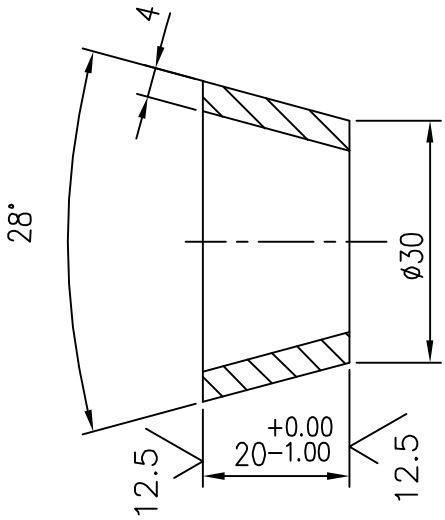

SECTION A-A

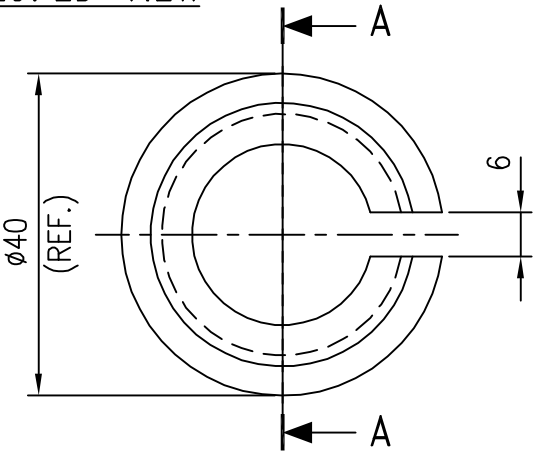

SHEET		4 x 38 x 102	AA1011711168	0.13	
			AA10111	1	
DESCRIPTION & DRG. No.	VAR No.	RAW MATERIAL SIZE OR CASTING DRG.NO. OR FORGING DRG.NO.	MATL. CODE	NET.WT.	GROSS WT
			MATL. SPECN.	QTY.	

TYPE OF PRODUCT OR NAME OF CUSTOMER/PROJECT

BHARAT HEAVY ELECTRICALS LTD. HYDERABAD

	NAME	SIGN	DATE	NO.OF VAR.
DRN.	N.D.S.		09.10.98	–
CKD.	S.G		09.10.98	
APPD.	K.M.R		09.10.98	

DEPT.	GRADE OF TOL. DIM.		SCALE	WEIGHT(K.G.)	REF.TO ASSY.DRG.	ITEM No.	No.OF ITEM
PULV. ENGG.	¢/M/f		1:1 & 1:2	0.13	–	–	–
CODE 446							

TITLE

WELDING PLUG – 1"

DRAWING No. 4-61-162-00749

REV. 04

SHT. No. 1 | No. OF SHT. 1

REF. TO HY0230261 FOR UNSPECIFIED TOLERANCES.

SIGN. & DATE | REF. DRG. No. | COMPUTER No. 46100749.DWG | INVENTORY NO.

THE INFORMATION ON THIS DOCUMENT IS THE PROPERTY OF BHARAT HEAVY ELECTRICALS LIMITED. IT MUST NOT BE USED DIRECTLY OR INDIRECTLY IN ANY WAY DETRIMENTAL TO THE INTEREST OF THE COMPANY.

STRUCTURAL STEEL-STANDARD QUALITY

(PLATES, SECTIONS, STRIPS, FLATS & BARS)

(ORDERING DESCRIPTION)

COPYRIGHT AND CONFIDENTIAL
The Information on this document is the property of BHARAT HEAVY ELECTRICALS LIMITED.
It must not be used directly or indirectly in any way detrimental to the Interest of the company.

1.0 GENERAL:

This specification governs the quality requirements of structural steel plates, strips, flats, bars and sections such as angles, beams, channels and tees etc. of IS: 2062 – 2011, Gr: E250, Quality A

2.0 APPLICATION:

For general engineering purpose.

3.0 CONDITION OF DELIVERY:

Plates, Bars & Sections: Hot rolled in straight lengths without twists & Bends

4.0 COMPLIANCE WITH NATIONAL STANDARDS:

Material shall comply with the requirements of IS: 2062 – 2011, Gr: E250, Quality A

Material offered to EN 10025-2:2004 Gr. S275JR is also acceptable. The tolerance on dimensions for plates shall comply with EN 10029.

5.0 DIMENSIONS AND TOLERANCES:

5.1 DIMENSIONS:

5.1.1 Sizes

Material shall be supplied to the dimensions specified on BHEL Order.

5.1.2 Length

Unless otherwise specified, hot rolled bars and sections shall be supplied in 3 to 6 metres length.

5.2 Tolerances:

5.2.1 The tolerances on hot rolled material shall comply with IS: 1852. However, no plate shall be under the specified thickness at any point.

5.2.2 Straight for hot rolled bars:

Unless otherwise specified, the permissible deviation in straightness shall not exceed 5 mm in any 1000 mm length.

6.0 HARDNESS (BRINELL):

When tested in accordance with IS: 1500, the material shall show a brinell hardness in the range of 120-156 HB.

Note: Hardness test shall be conducted only when tensile test cannot be performed.

7.0 TEST CERTIFICATES:

Unless otherwise specified, three copies of test certificates shall be supplied.

In addition, the supplier shall ensure to enclose one copy of the test certificate along with their dispatch documents to facilitate quick clearance of the material.

The test certificate shall bear the following information.

AA10108 Rev.11 / IS:2062 Grade: E250 Quality A / EN 10025-2 Gr. S275JR,

BHEL order no., Melt no. Size, Results of chemical analysis and Mechanical tests, Supplier's name, Identification no. TC no., Signature of competent authority etc.

8.0 PACKING AND MARKING:

Plates shall be transported suitably to avoid damage during transit.

For plates below 10 mm thick, each pile (preferably of 16 plates) and each plate 10 mm thick & over shall be marked with melt no. AA10108, BHEL order no., Supplier's name, Identification no., Size & weight on any one corner and encircled with paint preferably of white colour.

9.0 REFERRED STANDARDS (Latest publications including amendments):

1) IS: 1500 2) IS: 1852 3) EN 10029

HOT ROLLED CARBON STEEL SHEET (410 N/mm² Tensile)

1.0 GENERAL:

This specification governs the quality requirements of Hot Rolled Carbon Steel Sheet of thickness of 2.5 mm to 4.0 mm (both inclusive).

2.0 APPLICATION:

Suitable for cold forming / drawing / fabrication by welding.

3.0 CONDITION OF DELIVERY:

Sheets shall be supplied in hot rolled, decaled and oiled condition. Imported sheets shall be supplied in straight lengths. The edges shall be flattened and sheared. Mill edges are not acceptable. Sheets shall be free from waviness and shall have a uniformly dull (matt) finish.

Oil used for rust prevention should be free from pungent smell. The following oils are suggested:

a) SERVO RP 125 of M/s. IOC.
b) RUSTOP 387/388 of M/s. HPC
c) Bharat TCPF of M/s. Bharat Petroleum
d) Any other TRP conforming to IS: 1154

4.0 COMPLIANCE WITH NATIONAL STANDARDS:

The material shall comply with the requirements of the following National standards and also meet the requirements of this specification.

IS: 5986 – 2011, Gr.: 255: Hot rolled steel flat products for structural forming and flanging purposes - Specification.

5.0 DIMENSIONS AND TOLERANCES:

5.1 Sizes:

Hot rolled carbon steel sheets shall be supplied to the dimensions in BHEL order.

5.2 Tolerances:

The tolerances on sheets shall comply with the following:

5.2.1 Thickness (IS: 1852):

Thickness, mm	Tolerance, mm
2.50	± 0.20
3.15	± 0.22
4.0	± 0.25

COPYRIGHT AND CONFIDENTIAL
The Information on this document is the property of BHARAT HEAVY ELECTRICALS LIMITED.
It must not be used directly or indirectly in any way detrimental to the Interest of the company.

5.2.2 Width, Length, Flatness, Edge chamber and Out of square tolerance for cut lengths:

As per IS:5986

6.0 MANUFACTURE:

Process of manufacture is left to the discretion of the manufacturer except Bessemer process.

Material shall be manufactured from semi killed or killed steel.

7.0 FREEDON FROM DEFECTS:

The sheets shall be free from harmful defects, twists, buckle, rust, scale and waviness and shall be reasonably smooth, flat and square.

8.0 CHEMICAL COMPOSITION:

The melt analysis of steel and the permissible variation in the composition of the material from the melt analysis shall be as follows:

Element	Melt analysis, percent, max.	Permissible variation, percent, max.
Carbon	0.15	0.03
Manganese	1.20	0.05
Sulphur	0.040	0.005
Phosphorus	0.040	0.005

Carbon equivalent (C.E.): 0.42 max.

9.0 TEST SAMPLES:

9.1 Tensile Test:

One sample shall be taken per thickness per consignment from each melt.

As far as possible test pieces shall be cut transverse to the direction of rolling and shall be of full thickness of the sheet rolled.

9.2 Bend Test:

One sample shall be taken per thickness per consignment from each melt.

Bend test pieces shall be cut so that the axis of the bend is parallel to the direction of rolling viz. transverse.

Note: When more than one thickness is rolled from the same melt, one additional test piece for each thickness shall be taken.

10.0 MECHANICAL PROPERTIES:

10.1 Bend:

When tested in accordance with IS: 1599, the test pieces shall be capable of being bent cold through 180° close. The outer convex surface of the test piece shall be free from cracks.

10.2 Tensile:

When tested as per IS : 1608, the test pieces shall show the following properties:

Tensile strength	: 410 – 520 N/mm^2
Yield strength	: 255 N/mm^2, min.
Elongation:	
For sheets up to & Incl. 3 mm, thick	: 15 %, minimum on 80 mm gauge length
For sheets above 3 mm, thick	: 24 %, minimum in 5.65 $\sqrt{S_o}$ gauge length

11.0 TEST CERTIFICATES:

Unless otherwise specified, three copies of test certificates shall be supplied.

In addition, the supplier shall ensure to enclose one copy of the test certificate along with their dispatch documents to facilitate quick clearance of the material.

The test certificate shall bear the following information:
AA10111, Rev 06: HOT ROLLED CARBON STEEL SHEET (410 N/mm^2 Tensile)
BHEL Order No,
Supplier's name,
Identification No
Melt No,
Process of manufacture
Details of pickling, descaling and oiling
Results of dimensional inspection
Results of Chemical analysis and Mechanical tests,

Note: Material procured, supplied and certified as AA10111 / IS: 5986, Gr.:255 and comply with the requirements of this specification is acceptable.

12.0 PACKING AND MARKING:

Steel sheets shall be supplied in bundles and shall be suitably packed in bundles to prevent corrosion and damage during transit.

The recommended packing for imported material shall be as shown below.

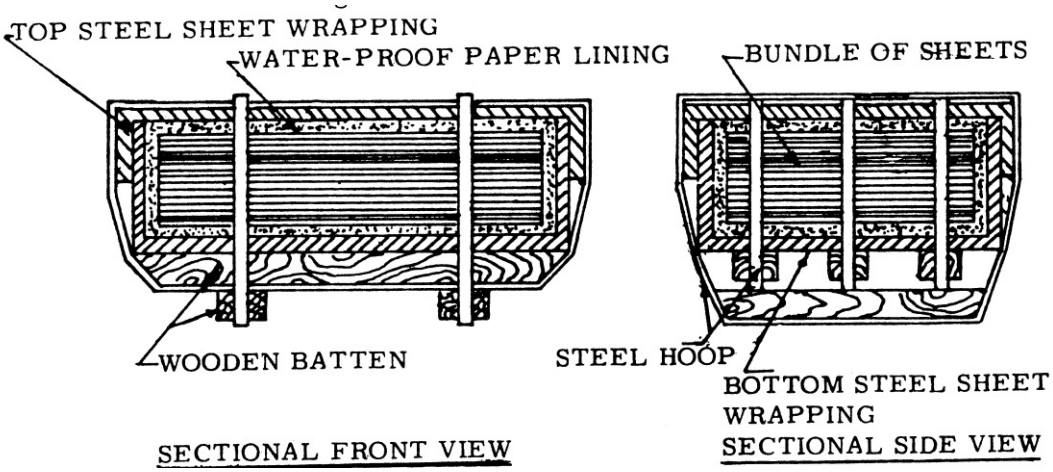

Note:

a) Water proof paper lining shall be preferably Volatile Corrosion Inhibitor (V.C.I.) Coated Paper with additional polythene (100 micron) enveloped.
b) Approximate weight of each bundle shall be 2 to 3 tonnes. Bundle weighing 2 metric tonnes is however preferred.

A metal label shall be securely attached to each bundle and shall bear the following information:

AA10111: HOT ROLLED CARBON STEEL SHEET (410 N/mm^2 Tensile)
BHEL Order No,
Supplier's Name & Identification No,
Size & Thickness of sheets
Weight

13.0 REFERRED STANDARDS (Latest publications including amendments):

1) IS: 1154 2) IS: 1599 3) IS: 1608 4) IS: 1852

STRUCTURAL STEEL - WELDABLE QUALITY
(PLATES, SECTIONS, STRIPS, FLATS AND BARS)

ORDERING DESCRIPTION

1.0 GENERAL:

The material shall conform to IS 2062 – 2011, E250-Gr.BR (with mandatory Impact Test) or DIN EN 10025-2:2005, Gr. S275JR and comply with following additional requirements.

2.0 APPLICATION:

For general engineering purposes, suitable for welding.

3.0 CONDITION OF DELIVERY:

3.1 Bars & Sections shall be supplied in Hot rolled in straight lengths without twists and bends.

3.2 The material shall be supplied as per IS: 2062 – 2011, E250 Gr.BR (with mandatory Impact Test) or as per DIN EN 10025-2:2005 Gr. 275JR.

3.3 Any other additional requirement as per BHEL Purchase order.

4.0 DIMENSIONS AND TOLERANCES:

4.1 Sizes:

Material shall be supplied to the dimensions specified in BHEL Order.

4.2 Tolerances:

The tolerances on hot rolled material shall comply with IS: 1852 or any other equivalent national standard.

4.3 Straightness for hot rolled bars:

Unless otherwise specified, the permissible deviation in straightness shall not exceed 5 mm in any 1000 mm length.

5.0 TEST SAMPLES:

The selection of test pieces for all tests like Chemical, Mechanical etc. shall be as per IS: 2062, E250-Gr.BR or DIN EN 10025-2, Gr. S275JR.

COPYRIGHT AND CONFIDENTIAL
The Information on this document is the property of BHARAT HEAVY ELECTRICALS LIMITED.
It must not be used directly or indirectly in any way detrimental to the Interest of the company.

26/8/14

CS-72

CORPORATE PURCHASING SPECIFICATION

6.0 ULTRASONIC EXAMINATION:

Plates shall be ultrasonically examined in accordance with BHEL standard AA0850120 (or ASTM-A435) as detailed below and shall comply with the acceptance standards specified therein.

6.1 For plates above 40 mm thick:

Shall be ultrasonically examined unless when otherwise specified in order.

7.0 TEST CERTIFICATES:

Unless otherwise specified, three copies of test certificates shall be supplied.

In addition, the supplier shall ensure to enclose one copy of the test certificate along with their dispatch documents to facilitate quick clearance of the material.

The test certificate shall bear the following information:

AA10119 - Rev.No.15/ IS: 2062-Gr: BR (with mandatory Impact test) or DIN EN 10025-2, Gr. S275JR,

BHEL order No.

Melt No, Size & Quantity, Batch No with heat treatment details, Results of Chemical analysis,

Mechanical tests & NDT, Supplier's name, Identification No, TC No, Signature of Competent Authority, etc.

8.0 PACKING AND MARKING:

Plates shall be transported suitably to avoid damage during transit.

Each plate shall be marked with Melt No. Material grade and specification, BHEL Order No, Supplier's Name Identification No, Size & weight, on any one corner and encircled with paint preferably of white colour.

9.0 REJECTION AND REPLACEMENT

If the material does not comply with the requirements of this specification during receipt inspection at BHEL or if any defect is found during further processing of material, BHEL reserves the right to reject the whole consignment and the supplier shall replace the material free of cost. The rejected material shall be taken back by the supplier after fulfilling the commercial terms and conditions.

10.0 REFERRED STANDARDS (Latest publications including amendments):

1) IS: 1852 2) ASTM - A435 3) AA0850120

26/6/14

CS-721

ABRASION RESISTANT IRON CASTINGS

1.0 GENERAL:

This specification governs the quality requirements of Abrasion Resistant Iron Castings, having good resistance to both low and high stress abrasion.

2.0 APPLICATION:

Used as liners and segments for wear resistance.

3.0 CONDITION OF DELIVERY:

Stress relieved.

As cast unless otherwise specified in BHEL order/drawing.

Castings shall not be painted.

4.0 COMPLIANCE WITH NATIONAL STANDARDS:

The material shall comply with the requirement of the following national standard and also meet the requirements of this specification.

IS: 4771 – 1985 | Abrasion resistance iron castings.
Type 1A: NiLCr 34/550

5.0 DIMENSION AND TOLERANCES:

Castings shall be true to the pattern / drawing.

Holes for machining up to including 50mm in diameter are to be cast solid, unless otherwise stated on BHEL order / drawing.

Unless otherwise specified on BHEL order/ drawing, untoleranced dimensions for the casings shall be as per tolerance class 4 of BHEL standard AA 023 04 02.

6.0 MANUFACTURE:

The iron for the castings shall be melted in an electric furnace or by any other suitable melting process as may be agreed to between BHEL and manufacturer.

COPYRIGHT AND CONFIDENTIAL
The Information on this document is the property of BHARAT HEAVY ELECTRICALS LIMITED
It must not be used directly or Indirectly in any way detrimental to the Interest of the company.

7.0 HEAT TREATMENT:

All castings shall be stress relieved at a temperature of 210 - 235^0 C for a minimum soaking period of 4 hours.

Test pieces shall also be stress relieved along with the castings they represent.

8.0 FINISH:

All castings shall be properly fettled and dressed and all surfaces shall be thoroughly cleaned. Whenever specified, the machined surfaces shall have the surface finish as indicated in the drawing.

9.0 FREEDOM FROM DEFECTS:

Castings shall be free from defects such as porosity, blow holes, sand inclusions, shrinkage, cavities, hard spots, cold shuts, cracks, etc., which may adversely affect machining and utility of castings.

10.0 CHEMICAL COMPOSITION:

The melt analysis of the iron shall be as follows:

Element	Melt analysis, Percent	
	Min.	Max
Carbon	3.2	3.6
Silicon	0.3	0.6
Manganese	0.3	0.6
Nickel	3.0	5.5
Chromium	1.5	2.5
Molybdenum	--	0.5
Sulphur	--	0.150
Phosphorus	--	0.300
Iron	Remainder	

Note:

The amount of silicon, chromium and nickel shall be balanced depending upon the carbon content and the thickness of the castings to ensure of free graphite and coarse bainite. Graphite carbon should not exceed 0.1 percent.

11.0 TEST SAMPLES:

11.1 Chemical Analysis:

The foundry shall analyse each heat for chemical composition. A sample way to obtain chips is to dip a cooled mild steel bar in the liquid metal and withdraw quickly. The solidified iron can be easily knocked off the bar with a hammer. The chips must be free from sand, carbon and other contaminations.

11.2 Hardness Test:

The foundries shall pour the test bar of size 150 X 150 X 25 mm for each heat representing each heat treatment batch. When possible, the test bar shall be cast integrally with the castings so as to receive the same cooling rate. All the test specimens shall be identified with heat numbers by proper painting.

12.0 MECHANICAL PROPERTIES:

Hardness (Brinell):

Hardness shall be measured as per IS:1500 on the test blocks and on castings at random by a hardness tester using 10 mm diameter tungsten carbide ball. The hardness shall not be less than 550 HB.

Note: Minimum hardness value upto 50 Brinell points lower than specified shall be permitted for castings having sectional thickness above 125 mm.

13.0 MICROSTRUCTURE:

This shall consist of carbides in a matrix of martensite, bainite and austenite and shall be free from graphite, pearlite and ferrite.

14.0 ADDITIONAL TESTS:

14.1 Magnetic particle inspection:

As per BHEL standard AA 085 01 33 and norms of acceptance as per BHEL standard AA 085 01 34.

14.2 If specified on the drawing/order, castings shall be subjected to non-destructive testing.

Norms of acceptance shall be as per mutual agreement between BHEL and the manufacturer.

15.0 REPAIR OF CASTINGS:

Repair of castings shall not be carried out by the manufacturer without the prior permission of BHEL.

16.0 TEST CERTIFICATES:

Three copies of test certificates shall be supplied unless otherwise stated on BHEL order, preferably in the test certificate format annexed to this specification (Annexure -1).

In addition, the supplier shall ensure to enclose one copy of the test certificate along with their despatch documents to facilitate quick clearance of the material.

The test certificate shall bear the following information:

Dimensional inspection.

Details of heat treatment.

Reduction ratio

Chemical composition

Results of mechanical tests

Results of additional tests called for in the order / drawing.

17.0 PACKING AND MARKING:

Castings shall be suitably packed to prevent corrosion and damage during transit. Machined surfaces shall be properly protected with anticorrosive compounds.

Each package or casting (when supplied separately) shall be legibly marked with the following information.

AA 197 41: Abrasion resistant iron castings

BHEL Order No.

Consignment/Identification No.

Melt No.

Weight

Supplier's Name

18.0 REFERRED STANDARDS (Latest Publications Including Amendments):

1. AA 023 04 02
2. AA 085 01 33
3. AA 085 01 34
4. IS : 1500
5. IS:4771

ANNEXURE 1 - RECOMMENDED TEST CERTIFICATE FORMAT FOR CASTINGS

SUPPLIERS'S NAME AND ADDRESS

1. Customer :
2. TC No. & Date :
3. PO No. :
4. Process of Melting :
5. Deoxidisation Process
6. Cast No. & Date :
7. Batch No. :
8. Heat Code :
9. Spec.. No. :
10. Test Bar Size

II. CASTING COVERED BY T.C.

Sl. No.	Drawing No. & Item No.	Description	Quantity & Weight

12. CHEMICAL COMPOSITION (PERCENT)

Element	C	Si	Mn	S	P										
As per Spec. Min.															
As per Spec. Max..															
Actual Values.															

13. HEAT TREATMENT
(To be accompanied by Recorder Chart, wherever called for)

Condition	Temp.°C	Soaking Time. Hrs..	Cooling Medium

14. MECHANICAL PROPERTIES

	T.S. N/mm2	Y.S. 0.5/0.2% Proof N/mm2	% E on GL 5.65 SO	% R.A. Min	Hardness BHN Min. 3 Values	Impact Value, Joules	Bend	
As per Spec. Min.								
As per Spec. Max.								
Actual Values.								

15. Surface Finish (When called for in the order/drg)	
16. DIMENSIONAL INSPECTION	

17.NON-DESTRUCTIVE TESTS

Nature of Test	Acceptance Level	Instrument used	Range	Results	Any other details
Ultrasonic					
Radiographic					
Dye Penetrant/ Magnetic Particle					

18. OTHER TESTS, IF ANY (MICRO-Scopic, Hydraulic, Etc.)	
19. IDENTIFICATION ON CASTING AS PER CPS.	

We hereby certify that the items mentioned above have been tested and inspected in our presence and are found to be in accordance with the drawings, specifications and purchase order.

Signature & Seal of the Inspecting Officer
(Purchase Representative)

Signature and Seal of the Chief of Quality Control
Chief Metallurgist of the Supplier.

Date :

Date :

INSTRUCTION :

a) If steel is produced by LD or Oxygen process, Nitrogen content should be furnished and shall not exceed 0.009%
b) Test Certificates are to be furnished as per Purchase Order and Specifications, in A4 Size transparent paper.
c) All the entries including signature should be in black ink.
d) If testing is done by outside agencies, the original TCs shall be furnished.
e) The actual Test Certificate may run into more than one A4 size paper, if needed, to facilitate filling up of details.

FIRST ANGLE PROJECTION

ALL DIMENSIONS ARE IN mm.

REV.	DATE	ALTERED	REV.	DATE	ALTERED	REV.	DATE	ALTERED
		CHECKED			CHECKED			CHECKED
		APPROVED			APPROVED			APPROVED

DESCRIPTION	S.NO.	DRAWING NO.	MATL. CODE / MATL. SPECN.	UNIT WT.(Kg.) / QTY.
JR.HEAD LINER–V	5	3–61–080–00393	AA19741	1
JR.HEAD LINER–IV	4	3–61–080–00392	AA19741	1
JR.HEAD LINER–III	3	3–61–080–00391	AA19741	1
JR.HEAD LINER–II	2	3–61–080–00390	AA19741	1
JR.HEAD LINER–I	1	2–61–080–00420	AA19741	4

TYPE OF PRODUCT OR
NAME OF CUSTOMER/PROJECT

BHARAT HEAVY ELECTRICALS LTD.
VARANASI

	NAME	SIGN	DATE
DRN.	D.BASAK		04.12.03
CKD.	S.TEWARI		04.12.03
APPD.	V.KUMAR		04.12.03

NO.OF VAR.

DEPT. P&D

CODE

NTS

WEIGHT(K.G.)

REF.TO ASSY.DRG.

ITEM NO.

NO.OF ITEM

TITLE

SET OF JR. HEAD LINERS

DRAWING NO.
HY–204.00

REV.
00

SHT.NO. 01

NO.OF SHT. 01

REF. TO HY0230261 FOR UNSPECIFIED TOLERANCES.

INVENTORY NO. | SIGN. & DATE | REF. DRG. NO. | COMPUTER NO.

THE INFORMATION ON THIS DOCUMENT IS THE PROPERTY OF BHARAT HEAVY ELECTRICALS LIMITED.
IT MUST NOT BE USED DIRECTLY OR INDIRECTLY IN ANY WAY DETRIMENTAL TO THE INTEREST OF THE COMPANY.

RV1920200673

S.NO.	DESCRIPTION	DRG.NO.	QTY.	WEIGHT(KG.)
1	JR. HEAD LINER	2-61-088-02062	2	10
2	JR. HEAD LINER	2-61-088-02061	1	16
3	JR. HEAD LINER	2-61-088-02060	1	16
		JR. HEAD LINER SET Matl. AA19741		
		HY-901.09.01.A		

(VIKAS VERMA)
Dy. Manager
P&D.
BHEL- Varanasi

Copyright and Confidential
The information on this document is the property of BHARAT HEAVY ELECTRICALS LIMITED.
It must not be used directly or indirectly in any way detrimental to the interest of the company.

LIST OF APPLICABLE STANDARDS ON LIMITS, FITS AND TOLERANCES

1.0 SCOPE:

The standard covers the list of applicable standards on Limits, Fits and Tolerances. These standards are applicable unless or otherwise specified.

2.0 LIST OF APPLICABLE STANDARDS:

SL. NO.	STANDARD NO.		TITLE
1.	AA0230201	-	Limits and Fits (Tolerance grade, Position and Class).
2.	AA0230202	-	Limits and sizes for commercial bolts and nuts.
3.	AA0230204	-	Guide for selection of Fits.
4.	AA0230206	-	Standard limits for Shafts (upto 500 mm).
5.	AA0230207	-	Standard limits for Shafts (above 500 mm and upto 3150 mm).
6.	AA0230208	-	Allowable deviations for dimensions without specified tolerances (linear and angular).
7.	AA0230402	-	Permissible deviations for untoleranced dimensions of castings.
8.	AA0230403	-	Tolerancing system ISO Metric Screw Threads
9.	AA0621101	-	Tolerances and Machining allowances for Flame cutting.
10.	AA0621104	-	General tolerances for welding constructions for length and angles.
11.	AA0621105	-	General tolerances for welded structures – form and position.

NOTE:

1) AA 023 02 08

Medium class of deviation is applicable, if the same is not mentioned on the drgs./specs.

2) AA 023 04 02

Tolerance class 5 is applicable, if the same is not mentioned on the drgs./specs.

3) AA 062 11 04

Accuracy class A is applicable if the same is not mentioned on the drgs.

4) AA 062 11 05

Accuracy class E is applicable, if the same is not applicable on drgs.

Copyright and Confidential
The information on this document is the property of BHARAT HEAVY ELECTRICALS LIMITED.
It must not be used directly or indirectly in any way detrimental to the interest of the company.

BHARAT HEAVY ELECTRICALS LIMITED

Ramachandrapuram, Hyderabad – 502 032, INDIA

QW – 482 WELDING PROCEDURE SPECIFICATION (WPS)

Welding Procedure Specification No.: WE006 **Date: 02.08.86** **Supporting PQR No.:** 516, **Dt** : 11.05.10

Revision No.: 07 **Date:** 24.04.2016

Welding Process (es) : *SMAW* **Type (s) :** *MANUAL*

JOINTS (QW 402)

Joint Design: *As per manufacturing drawing (groove/fillet)*

Root Spacing : *As per manufacturing drawing*

Backing (Yes) : *for double side butt welds and backing strip joints*

(No) : *for single side welds*

Backing Material (Type) : *Base metal / Weld metal*

Metal: *Yes* **Non-Fusing Metal**: *No*

Retainer: *No*

BASE METALS (QW – 403)

P. No. *: 1* **Group No. :** *1 & 2* **TO** **P. No.:** *1* **Group No.:** *1 & 2*

OR

Specification type & grade: -------- **to** Specification type & grade : -------

OR

Chemical Analysis & Mechanical Properties: --- to Chemical Analysis & Mechanical Properties: ----

Thickness Range :

Base Metal : **Groove:** *5.0 mm to 38 mm* ** **Fillet :** *all sizes*

Deposited pass thickness > 13mm – Not Permitted

Other : None

Filler Metals (QW – 404)

	SMAW
Spec. No. (SFA)	*5.1*
AWS NO (CLASS)	A5.1 (*E 7018*)
F. No.	4
A. No.	*1*
Size of Filler Metals	*Dia 2.5, 3.15, 4.0, 5.0mm*
Filler Metal Product Form	N.A
Supplemental Filler Metal	N.A
Deposited Weld Metal Thickness Range : Groove: **Fillet:**	38 *mm Max.* *38 mm Max Throat*
Electrode Flux (Class)	*Basic*
Consumable Insert	*No*
Max. Bead Thickness	5 *mm*

** Note : For Unequal thicknesses base material thickness qualified upto 50mm and weld metal thickness limited to 38mm max.

Rev : 07 – Note added regarding base material thickness

N.A – Not Applicable

POSITIONS (QW-405)

Position(s) Groove : *ALL POSITIONS*
Welding Progression: *UP for Vertical*
Down –Not permitted
Position (s) Fillet: *ALL*
Other : None

POSTWELD HEAT TREATMENT (QW-407)

Not Permitted

Temperature Range: *NA*

Time Range: *NA*
Other : *None*

PREHEAT (QW-406)

Preheat Temp Min: *10 º C min for < 31mm*
100 º C min for 31mm and above
Interpass Temp Max: *300 º C*
Preheat Maintenance: *Minimum specified temperature for every restart*
Other : None

GAS (QW - 408)

	Percentage Composition		
	Gas(es)	**Mixture**	**Flow Rate**
Shielding :	N.A	-	-
Trailing :	N.A	-	-
Backing :	N.A	-	-

Other : None

ELECTRICAL CHARACTERISTICS (QW-409)

Weld Pass (es)	Process	Filler Metal		Current type & Polarity	Amps (Range)	Wire feed speed	Energy or Power (Range)	Volts (Range)	Travel speed	Other
		Classifi-cation	Diam-eter							
Root& Subs-equent as requi-red	*SMAW*	*E 7018*	*2.5mm*	*DCEP*	*60 – 90A*	N.A	N.A	*22-34V*	N.A	*String for horizontal; Others Weave (Max 3 times Electrode Core Dia)*
	-do-	*-do-*	*3.15mm*	*-do-*	*100-150A*	*-do-*	*-do-*	*-do-*	*-do-*	
	-do-	*-do-*	*4.0mm*	*-do-*	*150-200A*	*-do-*	*-do-*	*-do-*	*-do-*	
		-do-	*5.0mm*	*-do-*	*200-260A*	*-do-*	*-do-*	*-do-*	*-do-*	

Pulsing Current : *N.A*

Heat Input *: N.A*

Tungsten Electrode Size and Type : *N.A*

Mode of Metal Transfer for GMAW (FCAW): *N.A*

Others **:** None

TECHNIQUE (QW-410)

String or Weave Bead: *string and/or weave*

Orifice or Gas Cup Size : *N.A*

Initial / Interpass Cleaning : *chipping / brushing / grinding*

Method of Back Gouging: *grinding/gouging if required*

Oscillation *: N.A*

Contact tube to work distance : N.A

Multiple or Single Pass : *Multiple pass*

Multiple or Single Electrodes : *Single electrode*

Closed to out chamber : *N.A*

Peening : *Not allowed*

Use of thermal processes : *N.A*

Other : *Clean weld area to remove oil, rust, grease, etc. prior to welding.*

Prepared by

Approved by

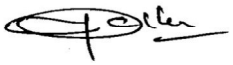

Welding Engineer

HEAD / Welding Engg

N.A – Not Applicable

GENERAL COMMERCIAL TERMS & CONDITIONS OF ENQUIRY
(FOR INDIAN VENDORS)

Amendment- 27
ANNEXURE-A

ITEM DESCRIPTION:
ENQUIRY NO:

Sl No	BHEL STANDARD TERMS &CONDITIONS	Confirmation of supplier (Yes/No)
1.	A) OFFER MUST BE SUBMITTED IN TWO PART BID SYSTEM NAMELY TECHNO-COMMERCIAL BID & PRICE BID FOR THE ITEM AS PER ENQUIRY IN SEPARATE SEALED COVERS: (I) TECHNO – COMMERCIAL BID & (II) PRICE BID SHOULD BE CLEARLY SUPERSCRIBED THE ENQUIRY NO. AND DUE DATE ON THE ENVELOPES. (B) UN-PRICED OFFER WITH TECHNICAL BID IS REQUIRED TO BE FURNISHED BY THE VENDOR. TECHNICAL OFFER SHOULD CLEARLY REFLECT AT LEAST OUR MATERIAL CODE, ITEM DESCRIPTION & QUANTITY. (C) THE DIFFERENCE BETWEEN "UN-PRICED OFFER" AND "PRICED OFFER" SHOULD BE ONLY THE PRICES WHEREVER APPLICABLE. THE RATES AND AMOUNT SHOULD BE CLEARLY WRITTEN IN FIGURES AND WORDS BOTH WITHOUT ANY CUTTING / OVERWRITING. (D) **IMPORTANT POINT FOR VENDOR WHO HAVE NOT SUBMITTED THE SRF (SUPPLIER REGISTRATION FORM) SO FAR**: THE VENDORS, WHO HAVE NOT SUBMITTED THE SRF SO FAR, MUST SUBMIT THE SAME ALONG WITH PART- 1 BID. THE SRF TO BE DOWNLOADED FROM WWW.BHEL.COM OR https://herp.bhel.com .	
2.	BID SHOULD BE FREE FROM CORRECTION, OVERWRITING, USING CORRECTIVE FLUID, ETC. ANY INTERLINEATION , CUTTING , ERASURE OR OVERWRITING SHALL BE VALID ONLY IF THEY ARE ATTESTED UNDER FULL SIGNATURE(S) OF PERSON(S) SIGNING THE BID ELSE BID SHALL BE LIABLE FOR REJECTION .	
3.	YOUR TECHNO COMMERCIAL BID SHOULD MENTION THAT PRICE BID HAS BEEN SENT IN A SEPARATE ENVELOPE GIVING ITS REFERENCE.	
4.	VENDOR TO ENSURE THAT ITEM & QUANTITY MENTIONED IN THE OFFERS ARE EXACTLY SAME AS PER ENQUIRY. IF ANY DEVIATION IS THERE PARTY MUST MENTION SPECIFIC HEREWITH OTHERWISE BHEL SHALL CONSIDER THAT ITEM & QUANTITY AS REQUIRED IN ENQUIRY.	
5.	PLEASE MAKE SURE THAT THERE IS NO DISCREPANCY IN BETWEEN ACCEPTED TERMS & CONDITIONS MENTIONED IN THE CHECK LIST AND QUOTATION SUBMITTED BY VENDOR AND IF FOUND SO THEN THE TERMS & CONDITIONS WHICH ARE BENEFICIAL TO BHEL WOULD ONLY BE CONSIDERED.	
6.	THE TENDER RECEIVED AFTER 14:00 HRS ON THE DUE DATE WILL NOT BE CONSIDERED.	
7.	PART-I CONTAINING THE TECHNO-COMMERCIAL BID WILL BE OPENED ON THE DATE AND TIME SPECIFIED IN THE ENQUIRY, IN THE PRESENCE OF THOSE TENDERERS WHO WISH TO ATTEND. PART-II i.e., PRICE BID WILL BE OPENED ONLY OF THOSE BIDDERS WHO ARE FOUND TECHNO-COMMERCIALLY SUITABLE AFTER SCRUTINY OF THEIR PART-I OFFERS.	
8.	NO REVISED OFFERS WILL BE ACCEPTED UNLESS ASKED BY BHEL AFTER OPENING OF PART-1 BID IN ANY CASE.	
9.	THE RATE OF GST SHOULD BE CLEARLY MENTIONED IN THE OFFER.	
10.	VALIDITY OF OFFER SHOULD BE MINIMUM 90 DAYS FROM THE DATE OF TECHNO - COMMERCIAL BID OPENING OR 60 DAYS FROM THE REVERSE AUCTION DATE.	
11.	BHEL RESERVES THE RIGHT TO REJECT THE OFFER, WHICH IS HAVING DEVIATIONS TO THE TERMS AND CONDITIONS GIVEN IN THE TENDER ENQUIRY.	
12.	**PRICING TERMS**: PRICES ONCE QUOTED SHALL REMAIN FIRM WITHIN THE VALIDITY OR ANY EXTENSION THEREOF FOR PLACEMENT OF ORDER, TILL COMPLETE EXECUTION OF THE ORDER, WITHOUT ANY ESCALATION/INCREASE FOR ANY REASON, WHATSOEVER, UNLESS SPECIFICALLY PROVIDED FOR IN THE ENQUIRY & PO. IN CASE OF FOREIGN VENDORS, THE QUOTED PRICE SHALL BE TAKEN AS INCLUSIVE OF THIRD PARTY INSPECTION AND TESTING CHARGES AS CALLED FOR IN THE NIT.	
13.	**BID EVALUATION:** UNLESS SPECIFIED IN THE TENDER, VENDOR MUST NOTE THAT BHEL WILL ARRIVE THE L1 STATUS FOR EACH ITEM ON LANDED COST BASIS. ACCORDINGLY, ORDER SHALL BE PLACED ON LOWEST BIDDER ON INDIVIDUAL ITEM BASIS ONLY, UNLESS BHEL ASK FOR TERMS OTHER THAN THIS ON EXCEPTION BASIS. IN THE COURSE OF EVALUATION, IF MORE THAN ONE BIDDER HAPPENS TO OCCUPY L-1 STATUS, EFFECTIVE L-1 WILL BE DECIDED BY SOLICITING DISCOUNTS FROM THE RESPECTIVE L-1 BIDDERS. IN CASE MORE THAN ONE BIDDERS HAPPENS TO OCCUPY THE L-1 STATUS EVEN AFTER SOLICITING DISCOUNST, THE L-1 BIDDER SHALL BE DECIDED BY A TOSS/DRAW OF LOTS, IN THE PRESENCE OF THE RESPECTIVE BIDDER(S) OR THEIR REPRESENTATIVE(S). RANKING WILL BE DONE ACCORDINGLY. BHEL'S DECISION IN SUCH SITUATION SHALL BE FINAL AND BINDING.	
14.	**TERMS OF DELIVERY:** **I. FOR INDIGENOUS SUPPLIERS**: THE TERMS OF DELIVERY SHOULD BE QUOTED ON F.O.R. DESTINATION (BHEL HERP STORES VARANASI) BASIS ONLY (i.e. FREIGHT & INSURANCE ON VENDOR'S ACCOUNT ONLY). IF ANY BIDDER STILL QUOTES OTHER DELIVERY TERM IN PLACE OF BHEL HERP STORES, THEIR OFFER MAY NOT BE CONSIDERED FOR FURTHER PROCESSING. IT MUST BE SPECIFICALLY NOTED.	
15.	IF ANY INDIAN SUPPLIERS ARRANGE SUPPLY FROM FOREIGN PRINCIPLES/WORKS, TERMS OF DELIVERY SHOULD BE QUOTED ON CIF JNPT MUMBAI (INDIA) SEA PORT BASIS ONLY (i.e. FREIGHT & INSURANCE ON VENDOR'S ACCOUNT UPTO JNPT MUMBAI (INDIA) SEA PORT) OR CFR MUMBAI AIRPORT. HOWEVER FREIGHT CHARGES AS PER BHEL TRANSPORT CONTRACT FROM JNPT MUMBAI SEAPORT/MUMBAI AIRPORT TO BHEL VARANASI FOR EACH ITEM WILL BE LOADED AT THE TIME OF TOTAL LANDED COST CALCULATION (RATE OF BHEL TRANSPORT CONTRACT SHALL BE AS APPLICABLE RATE ON PART-1 BID OPENING DATE).	
16.	INSURANCE CHARGES SHALL BE TO VENDOR'S ACCOUNT ONLY IF PRICE QUOTED ON BHEL HERP STORES BASIS. IN CASE PRICE QUOTED IS ON CIF JNPT MUMBAI BASIS/ CFR MUMBAI AIRPORT BASIS, INSURANCE UP TO CIF JNPT MUMBAI/ MUMBAI AIRPORT SHALL BE IN VENDOR ACCOUNT.	
17.	**PAYMENT TERMS:** **I.FOR MSES VENDORS:** 100% AGAINST SRV WITHIN 45 DAYS THROUGH EFT (ELECTRONIC FUND TRANSFER) FROM THE DATE OF RECEIPT OF MATERIAL (DATE OF SRV) AT BHEL HERP VARANASI STORES AS PER PO. II.**FOR MEDIUM ENTERPRISES VENDORS**: 100% AGAINST SRV WITHIN 60 DAYS THROUGH EFT (ELECTRONIC FUND TRANSFER) FROM THE DATE OF RECEIPT OF MATERIAL (DATE OF SRV) AT BHEL HERP VARANASI STORES AS PER PO. **III. FOR NON- MSME:** 100% AGAINST SRV WITHIN 90 DAYS THROUGH EFT (ELECTRONIC FUND TRANSFER) FROM THE DATE OF RECEIPT OF MATERIAL (DATE OF SRV) AT BHEL HERP VARANASI STORES AS PER PO. **IV.BHEL HERP WILL MAKE PAYMENTS IN TWO PARTS: -** **PART-I:** BASIC INVOICE VALUE AND ALL OTHER CHARGES (EXCEPT GST AMOUNT) WILL BE PAID AS PER P.O. PAYMENT TERMS. **PART-II**: GST PORTION OF INVOICE VALUE WILL BE PAID ONLY AFTER FULFILLING FOLLOWING CONDITIONS: **(A)** PAYMENT OF GST AMOUNT INTO GOVT. ACCOUNT BY SUPPLIER AGAINST INVOICE RAISED TO BHEL. **(B)** FILING OF GST RETURN **(C)** DISPLAY OF GST CREDIT AGAINST BHEL GSTIN NO.09AAACB4146P2ZC IN GSTR-2B ON GSTN PORTAL. NOTE: 1. PAYMENT WILL BE MADE AFTER ACCEPTANCE OF MATERIAL. 2. ADVANCE PAYMENT IS NOT ACCEPTABLE BY BHEL HERP VARANASI IN ANY CASE. 3. IF ANY SUPPLIER FALLS UNDER "NON MSE" OR "NON MEDIUM" CATEGORY AT THE TIME OF PO PLACEMENT AND IF PARTY DOES NOT INFORM BHEL REGARDING CHANGE IN THEIR STATUS BEFORE PROCESSING OF THE PAYMENT, THEIR PAYMENT TERM WILL BE CONSIDERED AS NON MSME SUPPLIER WITHOUT ANY FURTHER INTIMATION. IF SUCH SUPPLIER INFORM BHEL OR BHEL GETS UPDATED ON THEIR OWN ABOUT PARTY'S STATUS CHANGE (WHEN PARTY BECOMES MSME FROM NON-MSME) BEFORE PROCESSING OF THE PAYMENT, PARTY'S PAYMENT TERM WILL BE CHANGED AS PER APPLICABLE STATUS. ACCORDINGLY, PURCHASING OFFICER WILL CHANGE PAYMENT TERMS IN THE APPLICABLE PO/S ALSO.	
18.	**LOADING OF PAYMENT TERM:** IN CASE OF DEVIATION, LOADING @ REPO RATE+4% (AS ON PART-1 OPENING DATE) SHALL BE LOADED WHILE ARRIVING AT LANDED COST TO BHEL.	
19.	**LIQUIDATED DAMAGES/ LATE DELIVERY (LD) PENALTY CLAUSE:** SUBJECT TO FORCE MAJEURE CONDITIONS, FAILURE TO SUPPLY WITHIN PURCHASE ORDER DELIVERY SCHEDULE WILL MAKE THE SUPPLIER LIABLE TO AN UNCONDITIONAL PENALTY OF 0.5 % PER WEEK OR PART THEREOF SUBJECT TO THE MAXIMUM OF 10% OF THE UNDELIVERED PURCHASE ORDER VALUE EXCLUDING TAXES & DUTIES. NO GRACE PERIOD SHALL BE GIVEN.	

20.	**LOADING OF LIQUIDATED DAMAGES (LD):** DEVIATION TO ABOVE STANDARD PENALTY CLAUSE, MAXIMUM LOADING OF 10% (IN CASE OF NON ACCEPTANCE OF LD CLAUSE) OR PART THEREOF (IN CASE OF PART ACCEPTANCE OF LD) SHALL BE LOADED WHILE ARRIVING LANDED COST TO BHEL. **LOADING OF DELIVERY TERM:** FURTHER IF DEVIATION IS FOUND IN THE ACCEPTED DELIVERY TERM AS WELL AS ACCEPTED PENALTY TERM, SUITABLE LOADING BASED ON TRANSPORTATION TIME TO BE TAKEN SHALL BE LOADED WHILE ARRIVING LANDED COST TO BHEL HERP STORES WHICH MAY BE AS BELOW: (i) 1% OF THE BASIC COST FOR INDIAN SUPPLIERS,	
21.	**DELIVERY PERIOD:** VENDOR SHOULD STRICTLY QUOTE THE DELIVERY PERIOD AS MENTIONED IN NIT.	
22.	IF ANY VENDOR DOES NOT SUPPLY THE ITEM WITHIN THE PURCHASE ORDER DELIVERY PERIOD, BHEL MAY/MAY NOT ACCEPT THE SUPPLY AT ITS SOLE DISCRETION.	
23.	**BANK GUARANTEE:** THE COST OF BHEL FREE ISSUE MATERIALS PER SET/PER ASSEMBLY AND TOTAL COST OF FIM FOR THE ENQUIRY ARE MENTIONED IN NIT. IN THIS REGARD: 1 (a). PARTY WILL HAVE TO SUBMIT EQUAL AMOUNT OF SECURITY DEPOSIT **(IN THE FORM OF 10% BG/FDR/DD/CHEQUE/BANK TRANSFER AND 90% INDEMNITY BOND)** TOWARDS THE COST OF BHEL MATERIALS TO BE ISSUED TO THEM BEFORE THE ISSUE OF BHEL MATERIALS TO THEM. AT ANY POINT OF TIME, PROPORTIONATE SECURITY DEPOSIT OF TOTAL/CUMMULATIVE MATERIAL VALUE SHOULD BE MAINTENED. (b) **IN CASE OF TRIAL/DEVELOPMENTAL ORDER, PARTY WILL HAVE TO SUBMIT 30% BG/FDR/DD/CHEQUE/BANK TRANSFER AND 70% INDEMNITY BOND TOWARDS THE COST OF BHEL FIM**. 2. BHEL MAY ASK THE SUPPLIER FOR SUBMISSION OF FULL SECURITY DEPOSIT AMOUNT OR PART DEPENDING UPON THE AVAILABILITY OF FREE ISSUE MATERAILS AT OUR END. 3. PARTY MUST HAVE TO SUBMIT THE SAME WITHIN 02 WEEK TIME FROM THE DATE OF WRITTEN INTIMATION BY BHEL WITHOUT FAIL OTHERWISE IT WOULD TREATED AS FAILURE OF HONOURING PO TERMS AND ACCORDINGLY BHEL MAY CANCEL THE PURCHASE ORDER AND INITIATE ALTERNATE PROCUREMENT ACTION AT SUPPLIER RISK & COST. 4. IN CASE OF ABSENCE OF DESIRED SECURITY DEPOSIT AT BHEL END AND ALSO NON RESPONSE OF POINT NO. 03 AS ABOVE, I. BHEL MAY HOLD THE PENDING PAYMENTS OF SUPPLIER AVAILABLE AT BHEL **ON THEIR CONSENT.** II. IF NO PAYMENT IS PENDING AT BHEL END, ACTION FOR ALTERNATE PROCUREMENT ACTION MAY BE INITIATED. **5. THE FORMAT OF BG AND IB SHALL BE PER ATTACHED ANNEXURE-BG/FIM AND IB-FIM RESPECTIVELY** 6.PARTY SHALL HAVE TO ARRANGE FURNISHING OF THE SFMS CODE ALONG WITH THE BG.	
24.	TRANSPORTATION CHARGES FOR SENDING BHEL FREE ISSUE MATERIALS (FIM) TO THE PARTY WORKS WILL BE BORNE BY BHEL ONLY. THE FREIGHT CHARGES FOR SENDING THE BHEL FIM FROM HERP STORES TO PARTY'S WORK FOR EACH ITEM WILL BE LOADED AS PER BHEL TRANSPORT CONTRACT AT THE TIME OF TOTAL LANDED COST CALCULATION (RATE OF BHEL TRANSPORT CONTRACT SHALL BE AS APPLICABLE RATE ON PART-1 BID OPENING DATE) . HOWEVER, VARANASI/LOCAL BASED VENDORS WILL LIFT THE FIM FROM BHEL STORES AND BORNE ITS TRANSPORTATION CHARGES.	
25.	IF BHEL ISSUES FREE ISSUE MATERIALS TO THE SUPPLIER, IT MUST BE RETURNED WITHIN THE TIME LIMIT AS PRESCRIBED IN GST LAW (PRESENTLY 01 (ONE) YEAR FROM THE DATE OF FREE ISSUE DATE) TO COMPLY THE GST RULES. IF ANY VENDOR DOES NOT RETURN THE BHEL FREE ISSUE MATERIALS AS MENTIONED ABOVE, THE FINANCIAL IMPLICATION ON ACCOUNT OF THIS, IF ANY, SHALL BE RECOVERED FROM THE PARTY BILLS.	
26.	**REVERSE AUCTION**: BHEL SHALL BE RESORTING TO REVERSE AUCTION (RA) (GUIDELINES AS AVAILABLE ON WWW.BHEL.COM) FOR THIS TENDER. RA SHALL BE CONDUCTED AMONG ALL THE TECHNO-COMMERCIALLY QUALIFIED BIDDERS. PRICE BIDS OF ALL TECHNO-COMMERCIALLY QUALIFIED BIDDERS SHALL BE OPENED AND SAME SHALL BE CONSIDERED AS INITIAL BIDS OF BIDDERS IN RA. IN CASE ANY BIDDER(S) DO (ES) NOT PARTICIPATE IN ONLINE REVERSE AUCTION, THEIR SEALED ENVELOPE PRICE BID ALONG WITH APPLICABLE LOADING, IF ANY, SHALL BE CONSIDERED FOR RANKING.	
27.	IF ANY OF THE VENDORS DO NOT ACCEPT THE ABOVE POINT MENTIONED AT SL. NO. 26, THEIR OFFER MAY BE LIABLE FOR REJECTION WITHOUT INTIMATION.	
28.	BHEL MAY SHORT CLOSE/CANCEL AN ORDER AT ANY TIME DURING THE CURRENCY OF THE CONTRACT/PO IRRESPECTIVE OF THE PO DELIVERY DATE, IF (I) THE WORK PROGRESS OF THE VENDOR IS POOR, OR (II) THE DELIVERY REQUIREMENT OF THE ITEM IS VERY CRITICAL & NOT BEING MET BY THE VENDOR ON WHICH ORDER HAS BEEN PLACED, OR (III) THERE IS NO RESPONSE FOR IMPROVEMENT IN DELIVERY AS PER BHEL REQUIREMENT,	
29.	THE OFFERS OF THE BIDDERS WHO ARE ON THE BANNED LIST AND ALSO THE OFFER OF THE BIDDERS, WHO ENGAGE THE SERVICES OF THE BANNED FIRMS, SHALL BE REJECTED. THE LIST OF BANNED FIRMS IS AVAILABLE ON BHEL WEB SITE www.bhel.com	
30.	**RESERVATION RIGHTS OF BHEL**: – BHEL RESERVES THE RIGHT TO REJECT ANY OR ALL QUOTATIONS WITHOUT ASSIGNING ANY REASONS THEREOF. BHEL ALSO RESERVES THE RIGHT TO INCREASE OR DECREASE THE TENDERED QUANTITIES. VENDORS SHOULD BE PREPARED TO ACCEPT ORDER FOR REDUCED QUANTITIES WITHOUT ANY EXTRA CHARGES. VENDOR SHOULD ALSO BE PREPARED FOR GIVING DISCOUNT IN CASE OF INCREASE IN QUANTITY.	
31.	**NON-DISCLOSURE AGREEMENT**: ALL DRAWINGS AND STANDARDS ARE PROPRIETARY OF BHEL. IT MUST NOT BE USED IN ANY WAY DETRIMENTAL TO THE INTEREST OF THE COMPANY. ALL SUPPLIERS SHALL FURNISH NDAS (NON-DISCLOSURE AGREEMENT) AGAINST USE OF DOCUMENTS FURNISHED BY BHEL TOWARDS UN-AUTHORIZED USE EXCEPT FOR THE PURPOSE IT HAS BEEN FURNISHED.	
32.	**SETTLEMENT OF DISPUTE:** IF ANY DISPUTE OR DIFFERENCE OF ANY KIND WHATSOEVER SHALL ARISE BETWEEN BHEL AND THE SUPPLIER/VENDOR, ARISING OUT OF THE CONTRACT FOR THE PERFORMANCE OF THE WORK WHETHER DURING THE PROGRESS OF CONTRACT TERMINATION, ABANDONMENT OR BREACH OF THE CONTRACT, IT SHALL IN THE FIRST PLACE REFERRED TO DESIGNATED ENGINEER FOR AMICABLE RESOLUTION BY THE PARTIES. DESIGNATED ENGINEER (TO BE NOMINATED BY BHEL FOR SETTLEMENT OF DISPUTES ARISING OUT OF THE CONTRACT) WHO WITHIN 60 DAYS AFTER BEING REQUESTED SHALL GIVE WRITTEN NOTICE OF HIS DECISION TO THE CONTRACTOR. SAVE AS HEREINAFTER PROVIDED, SUCH DECISION IN RESPECT OF EVERY MATTER SO REFERRED SHALL FORTHWITH BE GIVEN EFFECT TO BY THE SUPPLIER/VENDOR WHO SHALL PROCEED WITH THE WORK WITH ALL DUE DILIGENCE, WHETHER HE OR BHEL DESIRES TO RESOLVE THE DISPUTE AS HEREINAFTER PROVIDED OR NOT. IF AFTER THE DESIGNATED ENGINEER HAS GIVEN WRITTEN NOTICE OF THIS DECISION TO THE PARTY AND NO INTENTION TO PURSUE THE DISPUTE HAS BEEN COMMUNICATED TO HIM BY THE AFFECTED PARTY WITHIN 30 DAYS FROM THE RECEIPT OF SUCH NOTICE, THE SAID DECISION SHALL BECOME FINAL AND BINDING ON THE PARTIES. IN THE EVENT THE SUPPLIER/VENDOR BEING DISSATISFIED WITH ANY SUCH DECISION OR IF AMICABLE SETTLEMENT CANNOT BE REACHED THEN ALL SUCH DISPUTED ISSUES SHALL BE RESOLVED THROUGH CONCILIATION IN TERMS OF THE BHEL CONCILIATION SCHEME 2018 AS PER CLAUSE 14.1	
33.	**CONCILIATION (Clause 14.1):** ANY DISPUTE, DIFFERENCE OR CONTROVERSY OF WHATEVER NATURE HOWSOEVER ARISING UNDER OR OUT OF OR IN RELATION TO THIS AGREEMENT (INCLUDING ITS INTERPRETATION) BETWEEN THE PARTIES, AND SO NOTIFIED IN WRITING BY EITHER PARTY TO THE OTHER PARTY (THE "DISPUTE") SHALL, IN THE FIRST INSTANCE, BE ATTEMPTED TO BE RESOLVED AMICABLY IN ACCORDANCE WITH THE CONCILIATION PROCEDURE AS PER BHEL CONCILIATION SCHEME 2018. THE PROCEEDINGS OF CONCILIATION SHALL BROADLY BE GOVERNED BY PART-III OF THE ARBITRATION AND CONCILIATION ACT 1996 OR ANY STATUTORY MODIFICATION THEREOF AND AS PROVIDED IN - "PROCEDURE FOR CONDUCT OF CONCILIATION PROCEEDINGS" (AS AVAILABLE IN WWW.BHEL.COM)). **Note:** MINISTRY OF FINANCE HAS ISSUED OM REFERENCE NO. 1/2/24 DATED 03.06.2024 REGARDING "GUIDELINES FOR ARBITRATION AND MEDIATION IN CONTRACTS OF DOMESTIC PUBLIC PROCUREMENT. IN THE SAID OM IT HAS BEEN RECOMMENDED THAT GOVERNMENT DEPARTMENTS/ ENTITIES/AGENCIES ARE TO ENCOURAGE MEDIATION UNDER THE MEDIATION ACT. 2023. THE SAID ACT HAS NOT YET BEEN NOTIFIED BY THE GOVERNMENT. THEREFORE, THE CLAUSE "SETTLEMENT OF DISPUTES" SHALL BE MODIFIED ACCORDINGLY AS AND WHEN THE MEDIATION ACT 2023 GETS NOTIFIED.	
34.	**ARBITRATION (14.2) :**	

	14.2.1 EXCEPT AS PROVIDED ELSEWHERE IN THIS CONTRACT, IN CASE PARTIES ARE UNABLE TO REACH AMICABLE SETTLEMENT (WHETHER BY CONCILIATION TO BE CONDUCTED AS PROVIDED IN CLAUSE 14.1 HEREIN ABOVE OR OTHERWISE) IN RESPECT OF ANY DISPUTE OR DIFFERENCE; ARISING OUT OF THE FORMATION, BREACH, TERMINATION, VALIDITY OR EXECUTION OF THE CONTRACT; OR, THE RESPECTIVE RIGHTS AND LIABILITIES OF THE PARTIES; OR, IN RELATION TO INTERPRETATION OF ANY PROVISION OF THE CONTRACT; OR. IN ANY MANNER TOUCHING UPON THE CONTRACT (HEREINAFTER REFERRED TO AS THE 'DISPUTE'), THEN, EITHER PARTY MAY, REFER THE DISPUTES TO ARBITRAL INSTITUTION (TO BE IDENTIFIED BY BHEL VARANASI) AND SUCH DISPUTE TO BE ADJUDICATED BY SOLE ARBITRATOR APPOINTED IN ACCORDANCE WITH THE RULES OF SAID ARBITRAL INSTITUTION. **14.2.2** A PARTY WILLING TO COMMENCE ARBITRATION PROCEEDING SHALL INVOKE ARBITRATION CLAUSE BY GIVING NOTICE TO THE OTHER PARTY IN TERMS OF SECTION 21 OF THE ARBITRATION & CONCILIATION ACT, 1996 (HEREINAFTER REFERRED TO AS THE 'NOTICE') BEFORE REFERRING THE MATTER TO ARBITRAL INSTITUTION. THE NOTICE SHALL BE ADDRESSED TO THE HEAD OF THE UNIT, BHEL, EXECUTING THE CONTRACT AND SHALL CONTAIN THE PARTICULARS OF ALL CLAIMS TO BE REFERRED TO ARBITRATION WITH SUFFICIENT DETAIL AND SHALL ALSO INDICATE THE MONETARY AMOUNT OF SUCH CLAIM INCLUDING INTEREST, IF ANY. **14.2.3** AFTER EXPIRY OF 30 DAYS FROM THE DATE OF RECEIPT OF AFORESAID NOTICE, THE PARTY INVOKING THE ARBITRATION SHALL SUBMIT THAT DISPUTE TO THE ARBITRAL INSTITUTIONS (TO BE IDENTIFIED BY BHEL VARANASI)AND THAT DISPUTE SHALL BE ADJUDICATED IN ACCORDANCE WITH THEIR RESPECTIVE ARBITRATION RULES. THE MATTER SHALL BE ADJUDICATED BY A SOLE ARBITRATOR WHO SHALL NECESSARILY BE A RETD JUDGE HAVING CONSIDERABLE EXPERIENCE IN COMMERCIAL MATTERS TO BE APPOINTED/NOMINATED BY THE RESPECTIVE INSTITUTION. THE COST/EXPENSES PERTAINING TO THE SAID ARBITRATION SHALL ALSO BE GOVERNED IN ACCORDANCE WITH THE RULES OF THE RESPECTIVE ARBITRAL INSTITUTION. THE DECISION OF THE PARTY INVOKING THE ARBITRATION FOR REFERENCE OF DISPUTE TO A SPECIFIC ARBITRAL INSTITUTION FOR ADJUDICATION OF THAT DISPUTE SHALL BE FINAL AND BINDING ON BOTH THE PARTIES AND SHALL NOT BE SUBJECT TO ANY CHANGE THEREAFTER. THE INSTITUTION ONCE SELECTED AT THE TIME OF INVOCATION OF DISPUTE SHALL REMAIN UNCHANGED. 14.2.4 THE FEE AND EXPENSES SHALL BE BORNE BY THE PARTIES AS PER THE ARBITRAL INSTITUTIONAL RULES. 14.2.5 THE ARBITRATION PROCEEDINGS SHALL BE IN ENGLISH LANGUAGE AND THE SEAT AND VENUE OF ARBITRATION SHALL BE AT Varanasi (U.P.). 14.2.6 SUBJECT TO THE ABOVE, THE PROVISIONS OF ARBITRATION & CONCILIATION ACT 1996 AND ANY AMENDMENT THEREOF SHALL BE APPLICABLE. ALL MATTERS RELATING TO THIS CONTRACT AND ARISING OUT OF INVOCATION OF ARBITRATION CLAUSE ARE SUBJECT TO THE EXCLUSIVE JURISDICTION OF THE COURT(S) SITUATED AT Varanasi (U.P.). 14.2.7 NOTWITHSTANDING ANY REFERENCE TO THE DESIGNATED ENGINEER OR CONCILIATION OR ARBITRATION HEREIN, A. THE PARTIES SHALL CONTINUE TO PERFORM THEIR RESPECTIVE OBLIGATIONS UNDER THE CONTRACT UNLESS THEY OTHERWISE AGREE. SETTLEMENT OF DISPUTE CLAUSE CANNOT BE INVOKED BY THE CONTRACTOR, IF THE CONTRACT HAS BEEN MUTUALLY CLOSED OR 'NO DEMAND CERTIFICATE' HAS BEEN FURNISHED BY THE CONTRACTOR OR ANY SETTLEMENT AGREEMENT HAS BEEN SIGNED BETWEEN THE EMPLOYER AND THE CONTRACTOR. 14.2.8 IT IS AGREED THAT MECHANISM OF RESOLUTION OF DISPUTES THROUGH ARBITRATION SHALL BE AVAILABLE ONLY IN THE CASES WHERE THE VALUE OF THE DISPUTE IS LESS THAN RS. 10 CRORES. 14.2.9 IN CASE THE DISPUTED AMOUNT CLAIM, COUNTER CLAIM INCLUDING INTEREST IS RS. 10 CRORES AND ABOVE, THE PARTIES SHALL BE WITHIN THEIR RIGHTS TO TAKE RECOURSE TO REMEDIES OTHER THAN ARBITRATION, AS MAY BE AVAILABLE TO THEM UNDER THE APPLICABLE LAWS AFTER PRIOR INTIMATION TO THE OTHER PARTY. SUBJECT TO THE AFORESAID CONDITIONS, PROVISIONS OF THE ARBITRATION AND CONCILIATION ACT, 1996 AND ANY STATUTORY MODIFICATIONS OR RE-ENACTMENT THEREOF AS AMENDED FROM TIME TO TIME, SHALL APPLY TO THE ARBITRATION PROCEEDINGS UNDER THIS CLAUSE. 14.2.10 IN CASE, MULTIPLE ARBITRATIONS ARE INVOKED (WHETHER SUB-JUDICE OR ARBITRAL AWARD PASSED) BY ANY PARTY TO UNDER THIS CONTRACT, THEN THE CUMULATIVE VALUE OF CLAIMS (INCLUDING INTEREST CLAIMED OR AWARDED) IN ALL SUCH ARBITRATIONS SHALL BE TAKEN IN ACCOUNT WHILE ARRIVING AT THE TOTAL CLAIM IN DISPUTE FOR THE SUBJECT CONTRACT FOR THE PURPOSE OF CLAUSE 14.2.9. DISPUTES HAVING CUMULATIVE VALUE OF LESS THAN 10 CRORES SHALL BE RESOLVED THROUGH ARBITRATION AND ANY ADDITIONAL DISPUTE SHALL BE ADJUDICATED BY THE COURT OF COMPETENT JURISDICTION. **14.2.11 IN CASE OF CONTRACT WITH PUBLIC SECTOR ENTERPRISE (PSE) OR A GOVERNMENT DEPARTMENT, THE FOLLOWING SHALL BE APPLICABLE:** IN THE EVENT OF ANY DISPUTE OR DIFFERENCE RELATING TO THE INTERPRETATION AND APPLICATION OF THE PROVISIONS OF COMMERCIAL CONTRACT(S) BETWEEN CENTRAL PUBLIC SECTOR ENTERPRISES (CPSES)/ PORT TRUSTS INTER SE AND ALSO BETWEEN CPSES AND GOVERNMENT DEPARTMENTS/ORGANIZATIONS (EXCLUDING DISPUTES CONCERNING RAILWAYS, INCOME TAX, CUSTOMS & EXCISE DEPARTMENTS), SUCH DISPUTE OR DIFFERENCE SHALL BE TAKEN UP BY EITHER PARTY FOR RESOLUTION THROUGH AMRCD (ADMINISTRATIVE MECHANISM FOR RESOLUTION OF CPSES DISPUTES) AS MENTIONED IN DPE OM NO. 05/0003/2019-FTS-10937 DATED 14-12-2022 AS AMENDED FROM TIME TO TIME.	
35.	**JURISDICTION :** THIS CONTRACT SHALL BE GOVERNED BY THE LAW FOR THE TIME BEING IN FORCE IN THE REPUBLIC OF INDIA. THE CIVIL COURT HAVING ORIGINAL CIVIL JURISDICTION AT VARANASI-UP, SHALL ALONE HAVE EXCLUSIVE JURISDICTION IN REGARD TO ALL MATTERS IN RESPECT OF THE CONTRACT.	
36.	I. FOLLOWING DOCUMENTS SHOULD BE ENCLOSED AND ADDRESSED TO DGM (FINANCE) AND SAME SHALL BE DISPATCHED TO MM DEPTT. BHEL, HERP, TARNA, SHIVPUR, VARANASI-221003 FOR PAYMENT PURPOSE: a) 05 (FIVE) COPIES OF GST INVOICES b) COPY OF GR/RR. c) TEST CERTIFICATE AND GUARANTEE/WARRANTEE CERTIFICATE AND PDI REPORT, IF APPLICABLE. (ONE COPY). II. FURTHER TO ABOVE, 02 (TWO) COMPLETE SETS OF DOCUMENTS (COPIES OF ABOVE MENTIONED DOCUMENTS AT SL. NO. I FOR INDIAN SUPPLIERS (UNDER THIS CLAUSE) SHALL BE SENT FOR PURCHASE AND QUALITY DEPARTMENTS. ORIGINAL COPIES OF TC, GC, PDI REPORTS & OTHER QUALITY PAPERS SHALL BE ATTACHED IN THE SET OF DOCUMENTS FOR QUALITY DEPARTMENTS. III. THE VENDOR SHOULD PROVIDE BILLS & OTHER DOCUMENTS COMPLETE IN ALL RESPECT AS PER PURCHASE ORDER ALONGWITH DESPATCH OF MATERIALS. BHEL SHALL SEEK CLARIFICATION(S) (IF ANY) RELATED TO PAYMENT DOCUMENTS IN ONE GO. THE VENDOR SHOULD PROVIDE ALL SUCH CLARIFICATION(S) IMMEDIETLY.ANY DELAY IN PROCESSING OF PAYMENT, DUE TO NON RECEIPT OF CLARIFICATION(S) SOUGHT BY BHEL, SHALL BE ATTRIBUTABLE COMPLETELY TO VENDOR. IV. DIGITALLY SIGNED INVOICE IS ALSO ACCEPTABLE FOR PROCESSING OF PAYMENT.	
37.	THE VENDOR SHALL ENSURE THAT THEIR BANK DETAILS ARE UPDATED WITH US FOR TIMELY PAYMENT THROUGH EFT (ELECTRONICS FUND TRANSFER).	
38.	**GUIDELINES FOR SUSPENSION OF BUSINESS DEALINGS WITH SUPPLIERS/ CONTRACTORS:** THE REVISED GUIDELINES FOR SUSPENSION OF BUSSINESS DEALINGS ARE AVAILABLE ON BHEL WEBSITE AT "www.bhel.com" on "SUPPLIER REGISTRATION PAGE". RESPECTIVE BIDDERS / SUPPLIERS MAY REFER THIS BEFORE QUOTING AS PER THEIR REQUIREMENT. ACTION AGAINST THE DEFAULTED SUPPLIERS/ CONTRACTORS' SHALL BE TAKEN AS PER THESE GUIDELINES ONLY.	
39.	VENDOR MUST FOLLOW THE SEQUENTIAL DELIVERY SCHEDULE i.e. ITEMS TO BE SUPPLIED IN SUCH A MANNER THAT THE PURCHASE ORDER HAVING OLDER DELIVERY SCHEDULE SHOULD BE SUPPLIED EARLIER AND PURCHASE ORDER HAVING LATTER DELIVERY SCHEDULE TO BE SUPPLIED LATTER. IF ANY VENDOR DOES NOT FOLLOW THE SEQUENTIAL DELIVERY SCHEDULE ESPECIALLY FOR SAME ITEM, BHEL MAY ACCOUNT FOR THE ITEM IN SEQUENTIAL MANNER OR MAY RECOVER THE FINANCIAL IMPLICATION.	
40.	ALL ABOVE ACCEPTED TERMS & CONDITIONS SHALL BE PART OF PURCHASE ORDER WITH OR WITHOUT MENTIONING IN THE PO/CONTRACT BASED ON YOUR ACCEPTANCE AND OFFER SUBMITTED.	

41.	**IMPORTANT INSTRUCTION:** I.VENDORS ARE REQUESTED TO QUOTE THEIR RATE WITH DESCRIPTION MENTIONED IN THE ENQUIRY CONSIDERING ALL TECHNICAL TERMS & CONDITIONS OF THE ENQUIRY. ALSO RATES QUOTED SHOULD BE EXACLTY AS PER SL. NO. OF HARD COPY OF THE ENQUIRY (IF ENQUIRY HAS BEEN FLOATED THROUGH CONVENTIONAL MODE) OR AS PER SL. NO. APPEARING IN THE e-Procurement PORTAL (IF ENQUIRY HAS BEEN FLOATED THROUGH e-Procurement) ONLY. IT MUST BE FOLLOWED UP TO AVOID CONFUSION AT LATER STAGES. ALSO RATES TO BE SUBMITTED BOTH IN NUMERICS AS WELL AS IN WORD. IN CASE OF DISCREPENCY, RATES SUBMITTED IN WORDS SHALL BE CONSIDERED FOR FURTHER PROCESSING. II.DOCUMENTS SUBMITTED WITH THE OFFER SHOULD BE SIGNED AND STAMPED IN EACH PAGE BY AUTHORIZED REPRESENTATIVE OF THE BIDDER. II.IN CASE OF PDI, VENDOR SHALL RAISE ONLINE INSPECTION CALL IN ONLINE INSPECTION PORTAL/INTIMATE BHEL IN WRITTIING (WHERE INSPECTION IS IN BHEL HERP SCOPE) AT LEAST 01 WEEK IN ADVANCE OR AS MUTUALLY AGREED PERIOD ABOUT THE DATE AND PLACE AT WHICH GOODS WILL BE READY FOR INSPECTION. IV.PURCHASER OR HIS AUTHORIZED REPRESENTATIVE SHALL BE ENTITLED TO CARRY OUT SURVEILLANCE INSPECTION OF MATERIAL AND WORKMANSHIP AT SELLER'S PREMISES OR AT HIS SUB-CONTRACTOR'S PREMISES AT ALL REASONABLE TIMES DURING EXECUTION OF THE CONTRACT. SUCH INSPECTION, EXAMINATION AND TESTING, IF MADE, SHALL NOT ABSOLVE THE SELLER FROM HIS OBLIGATIONS UNDER THE CONTRACT. V.SUCH PRE-DISPATCH INSPECTION, EXAMINATION AND TESTING, IF MADE, AT VENDOR'S WORKS SHALL NOT ABSOLVE THE SELLER FROM HIS OBLIGATIONS TO MANUFACTURE/MACHINING THE GOODS UNDER THE CONTRACT. IF DEFCETS ARE FOUND AT LATER STAGE, IT IS THE SOLE RESPONSIBILITY OF THE VENDOR TO REPLACE/RECTIFY THE SAME.	
42.	**IMPORTANT CLAUSE FOR GST**: INPUT TAX CREDIT OF GST CAN BE AVAILED BY BHEL ONLY WHEN THE MATERIAL HAS BEEN PHYSICALLY RECEIVED AND GST INVOICE IS IN POSSESSION OF BHEL. THEREFORE, SUPPLIERS SHOULD ENSURE THE FOLLOWING IN RESPECT OF POS ISSUED BY BHEL: I. GST INVOICE SHOULD CONTAIN ADDRESS, GST NO. AND PAN NO. OF BHEL AS WELL AS OF SUPPLIER. APPLICABLE HSN CODE OF THE MATERIAL SHOULD BE INDICATED IN THE GST INVOICE. II. FIVE COPIES OF GST INVOICE AND LORRY RECEIPT MAY BE DESPATCHED ALONGWITH SHIPMENT OF THE GOODS IN ORDER TO AVOID ANY DELAY IN AVAILING INPUT CREDIT BY BHEL. III. DECLARE SUCH INVOICE IN HIS GSTR-1 RETURN FOR THE MONTH OF DESPATCH OF MATERIAL. IV. PAYMENT OF GST TO STATUTORY AUTHORITIES WITHIN PRESCRIBED TIME. V. IN CASE OF DISCREPANCY IN THE DATA UPLOADED BY THE BIDDER IN THE GSTN PORTAL VIS-A-VIS THE TAX INVOICE OR IN CASE OF ANY SHORTAGES OR REJECTION IN THE SUPPLY, THEN BHEL WILL NOT BE ABLE TO AVAIL THE TAX CREDIT. BIDDER HAS TO RECTIFY THE DATA DISCREPANCY IN THE GSTN PORTAL OR ISSUE CREDIT NOTE OR DEBIT NOTE (DETAILS ALSO TO BE UPLOADED IN GSTN PORTAL) FOR THE SHORTAGES OR REJECTIONS IN THE SUPPLIES OR ADDITIONAL CLAIMS FOR PROCESSING OF SUCH INVOICES. VI. GST TDS DEDUCTED AS PER GST ACT, IS UPLOADED IN GSTN PORTAL ALONG GSTR7. BIDDERS CAN DIRECTLY DOWNLOAD THE GST TDS CERTIFICATE FROM THE GSTN PORTAL. IN CASE GST CREDIT IS DELAYED /DENIED TO BHEL DUE TO NON OR DELAYED RECEIPT OF GOODS AND OR TAX INVOICE OR EXPIRY OF TIMELINE PRESCRIBED IN GST LAW FOR AVAILING SUCH ITC OR ANY OTHER REASON NOT ATTRIBUTABLE TO BHEL, GST AMOUNT SHALL BE RECOVERABLE FROM VENDOR ALONG WITH INTEREST /PENALTY LEVIABLE ON BHEL. IN CASE SUPPLIERS DELAYS DECLARING SUCH INVOICE IN HIS RETURN AND GST CREDIT AVAILED BY BHEL IS DENIED OR REVERSED SUBSEQUENTLY AS PER GST LAW, GST AMOUNT PAID BY BHEL TOWARDS SUCH ITC REVERSAL SHALL BE RECOVERABLE FROM SUPPLIER ALONGWITH INTEREST LEVIED/LEVIABLE ON BHEL. IN CASE OF RAISING ANY SUPPLEMENTARY TAX INVOICE (DEBIT/ CREDIT NOTE), THE SUPPLIER SHALL ISSUE THE SAME CONTAINING ALL THE DETAILS AS REFERRED TO IN SECTION 34 READ WITH SECTION 31 OF GST ACT & RULES REFERRED THERE UNDER .	
43.	**STATUTORY VARIATION CLAUSE :** ANY INCREASE IN THE RATE OF GST SHALL BE PAYABLE ONLY FOR DELIVERIES COMPLETED WITHIN THE SCHEDULED DELIVERY PERIOD, IN OTHER WORDS INCREASE IN THE RATE OF GST SHALL NOT BE PAYABLE FOR VALUE OF CONSIGNMENT DELIVERED AFTER THE SCHEDULED PURCHASE ORDER DELIVERY PERIOD.2.NEW TAXES AND DUTIES , IF IMPOSED SUBSEQUENT TO DUE DATE OF OFFER SUBMISSION, BY STATUTORY AUTHORITY DURING CONTRACT PERIOD (INCLUDING EXTENSION IF THE SAME IS NOT ATTRIBUTABLE TO BIDDER) SHALL BE REIMBURSED BY BHEL ON PRODUCTION OF RELEVANT SUPPORTING DOCUMENTS TO THE SATISFACTION OF BHEL . HOWEVER, BIDDER SHALL TAKE PRIOR APPROVAL OF BHEL BEFORE DEPOSITING NEW TAXES AND DUTIES.	
44.	**IMPORTANT INSTRUCTION FOR MSEs SUPPLIERS:** I. "MSE SUPPLIERS CAN AVAIL THE INTENDED BENEFITS ONLY IF THEY SUBMIT ALONG WITH OFFER, ATTESTED COPIES OF EITHER EM-II CERTIFICATE HAVING DEEMED VALIDITY (FIVE YEARS FROM THE DATE OF ISSUE OF ACKNOWLEDGEMENT IN EM-II) OR VALID NSIC CERTIFICATE OR EM-II CERTIFICATE ALONG WITH CA CERTIFICATE (FORMAT ENCLOSED AS PER ANNEXURE-1 WHERE DEEMED VALIDITY OF EM-II CERTIFICATE OF FIVE YEARS HAS EXPIRED) APPLICABLE FOR THE RELEVANT F/Y (LATEST AUDITED).DATE TO BE RECKONED FOR DETERMINING THE DEEMED VALIDITY WILL BE THE DATE OF BID OPENING (PART -1 IN CASE OF TWO PART BID). NON SUBMISSION OF SUCH DOCUMENTS WILL LEAD TO CONSIDERATION OF THEIR BID AT PAR WITH OTHER BIDDERS. NO BENEFIT SHALL BE APPLICABLE FOR THIS ENQUIRY IF ANY DEFICIENCY IN THE ABOVE REQUIRED DOCUMENTS ARE NOT SUBMITTED BEFORE PRICE BID OPENING. IF THE TENDER IS TO BE SUBMITTED THROUGH e-procurement PORTAL, THEN THE ABOVE REQUIRED DOCUMENTS ARE TO BE UPLOADED ON THE PORTAL. DOCUMENTS SHOULD BE NOTARIZED OR ATTESTED BY A GAZETTED OFFICE. II.IN CASE OF ANY CHANGE IN THE MSE STATUS OF THE BIDDER, IT SHALL BE RESPONSIBILITY OF THE BIDDER TO NOTIFY THE CHANGE AS A PART OF THE BID DOCUMENT. IF AT A LATER DATE IT COMES TO NOTICE OF BHEL, THAT THE CHANGE IN THE STATUS HAS NOT BEEN INTIMATED BY THE BIDDER AND THE ORDER IS OBTAINED UNDER THE PREMISE OF AN MSE, THEN BHEL WOULD CANCEL THE PENDING ORDER AGAINST THIS TENDER AND TAKE NECESSARY ACTION SUSPENSION OF THE BUSSINESS DEALING WITH THE BIDDER AS PER PROCUREMENT POLICY OF BHEL. III.25 % OF THE TENDERED QUANTITY IS EARMARKED FOR MSE SUPPLIERS IN THIS TENDER. IV.OUT OF THIS 25% TENDERED QUANTITY RESERVED FOR MSE SUPPLIERS, 4 % SHALL BE EARMARKED FOR PROCUREMENT FROM MSEs OWNED BY SC/ST ENTREPRENEURS. V.OUT OF THIS 25% TENDERED QUANTITY RESERVED FOR MSE SUPPLIERS, 3% SHALL BE EARMARKED FOR PROCUREMENT FROM MSEs OWNED BY WOMEN. VI.IN CASE MSE VENDOR PARTICIPATING IN THE TENDER QUOTES WITHIN THE PRICE BAND OF "L1+15%", THEY WILL BE ALLOWED TO SUPPLY THE 25% PORTION OF THE REQUIREMENT SUBJECT TO ACCEPTANCE OF L1 PRICE (ON LANDED COST BASIS) BY MSE VENDOR. IN CASE OF MORE THAN ONE SUCH MSE VENDOR WITHIN THE "L1+15% PRICE BAND" THE SUPPLY SHALL BE SHARED PROPORTIONATELY (TO 25% TENDERED QUANTITY). VII.IF THE L1 VENDOR HAPPENS TO BE A MSE VENDOR AGAINST ANY ITEM CODE, THEN 100% OF THE TENDERED QTY (FOR RESPECITVE ITEM CODE) SHALL BE PROPOSED TO ORDER ON THE L1 (MSE) VENDOR, EVEN THOUGH THERE MAY BE OTHER MSE VENDORS WITHIN THE "L1+15% PRICE BAND". VIII.IN CASE AFTER OPENING OF PRICE BID, IT IS SEEN THAT NO MSE HAS BECOME L1, THEN DEPENDING ON THE NATURE OF THE ITEM, IF IT IS NOT POSSIBLE TO SPLIT THE TENDERED ITEMS/QUANTITIES ON ACCOUNT OF REASONS LIKE CUSTOMER CONTRACT REQUIREMENTS OF SUPPLYING ONE MAKE FOR A GIVEN PROJECT OR TECHNICAL REASONS LIKE TENDERED ITEMS BEING A SYSTEM etc. THEN BHEL WOULD NOT COUNTER OFFER THE L1 PRICES EVEN THOUGH THERE MAY BE MSE BIDDERS WITHIN THE "L1+15% PRICE BAND" OF L1.	
45.	THE **STARTUPS** AS DEFINED IN THE GAZETTE OF INDIA NOTIFICATION NO.: G.S.R. 127 (E) DATED 19/02/2019 WILL BE EXEMPTED FROM FULFILLING THE CRITERIA, IF MENTIONED, IN THE PQR (PRE-QUALIFYING REQUIREMENT) REGARDING PRIOR TURNOVER AND PRIOR EXPERIENCE. HOWEVER, THERE MAY BE CIRCUMSTANCES (LIKE PROCUREMENTS OF ITEMS RELATED TO PUBLIC SAFETY, HEALTH, CRITICAL SECURITY OPERATIONS AND EQUIPMENTS ETC.) WHERE BHEL MAY PREFER THE VENDORS TO HAVE PRIOR EXPERIENCE RATHER THAN GIVING ORDER TO NEW ENTITIES. FOR SUCH PROCUREMENTS, BHEL MAY NOT RELAX THE CRITERIA OF PRIOR EXPERIENCE/TURNOVER FOR THE STARTUPS.	
46.	**PURCHASE PREFERENCE FOR INDIAN VENDORS:** FOR THIS PROCUREMENT, THE LOCAL CONTENT TO CATEGORIZE A SUPPLIER AS A CLASS I LOCAL SUPPLIER / CLASS II LOCAL SUPPLIER /NON LOCAL – SUPPLIER AND PURCHASE PREFERENCE TO CLASS I LOCAL SUPPLIER, IS AS DEFINED IN PUBLIC PROCUREMENT (PREFERNCE TO MAKE IN INDIA), ORDER 2017 DATED 04.06.2020 ISSUED BY DPIIT. IN CASE OF SUBSEQUENT ORDERS ISSUED BY THE NODAL MINISTRY, CHANGING THE DEFINITION OF LOCAL CONTENT FOR THE ITEMS OF THE NIT, THE SAME SHALL BE APPLICABLE EVEN IF ISSUED AFTER ISSUE OF THIS NIT, BUT BEFORE OPENING OF PART –II BIDS AGAINST THIS NIT. **MODEL CLAUSE FOR TENDER.** I. ANY BIDDER FROM A COUNTRY WHICH SHARES A LAND BORDER WITH INDIA WILL BE ELIGIBLE TO BID IN THIS TENDER ONLY IF THE BIDDER IS REGISTERED WITH THE COMPETENT AUTHORITY.	

	II. "BIDDER" (INCLUDING THE TERM 'TENDERER', 'CONSULTANT' OR 'SERVICE PROVIDER' IN CERTAIN CONTEXTS) MEANS ANY PERSON OR FIRM OR COMPANY, INCLUDING ANY MEMBER OF A CONSORTIUM OR JOINT VENTURE (THAT IS AN ASSOCIATION OF SEVERAL PERSONS, OR FIRMS OR COMPANIES), EVERY ARTIFICIAL JURIDICAL PERSON NOT FALLING IN ANY OF THE DESCRIPTIONS OF BIDDERS STATED HEREINBEFORE, INCLUDING ANY AGENCY BRANCH OR OFFICE CONTROLLED BY SUCH PERSON, PARTICIPATING IN A PROCUREMENT PROCESS. III. "BIDDER FROM A COUNTRY WHICH SHARES A LAND BORDER WITH INDIA" FOR THE PURPOSE OF THIS ORDER MEANS: - a) AN ENTITY INCORPORATED, ESTABLISHED OR REGISTERED IN SUCH A COUNTRY: OR b) A SUBSIDIARY OF AN ENTITY INCORPORATED, ESTABLISHED OR REGISTERED IN SUCH A COUNTRY; OR c) AN ENTITY SUBSTANTIALLY CONTROLLED THROUGH ENTITIES INCORPORATED, ESTABLISHED OR REGISTERED IN SUCH A COUNTRY; OR d) AN ENTITY WHOSE BENEFICIAL OWNER IS SITUATED IN SUCH A COUNTRY; OR e) AN INDIAN (OR OTHER) AGENT OF SUCH AN ENTITY; OR f) A NATURAL PERSON WHO IS A CITIZEN OF SUCH A COUNTRY; OR g) A CONSORTIUM OR JOINT VENTURE WHERE ANY MEMBER OF THE CONSORTIUM OR JOINT VENTURE FALLS UNDER ANY OF THE ABOVE IV. THE BENEFICIAL OWNER FOR THE PURPOSE OF (III) ABOVE WILL BE AS UNDER: 1. IN CASE OF A COMPANY OR LIMITED LIABILITY PARTNERSHIP, THE BENEFICIAL OWNER IS THE NATURAL PERSON (S) WHO, WHETHER ACTING ALONE OR TOGETHER, OR THROUGH ONE OR MORE JURIDICAL PERSON, HAS A CONTROLLING OWNERSHIP INTEREST OR WHO EXERCISES CONTROL THROUGH OTHER MEANS. EXPLANATION – a. "CONTROLLING OWNERSHIP INTEREST" MEANS OWNERSHIP OF OR ENTITLEMENT TO MORE THAN TWENTY-FIVE PER CENT. OF SHARES OR CAPITAL OR PROFITS OF THE COMPANY b. "CONTROL" SHALL INCLUDE THE RIGHT TO APPOINT MAJORITY OF THE DIRECTORS OR TO CONTROL THE MANAGEMENT OR POLICY DECISIONS INCLUDING BY VIRTUE OF THEIR SHAREHOLDING OR MANAGEMENT RIGHTS OR SHAREHOLDER'S AGREEMENTS OF VOTING AGREEMENTS; 2. IN CASE OF A PARTNERSHIP FIRM, THE BENEFICIAL OWNER IS THE NATURAL PERSON (S) WHO, WHETHER ACTING ALONE OR TOGETHER, OR THROUGH ONE OR MORE JURIDICAL OF CAPITAL OR PROFITS OF THE PARTNERSHIP; 3. IN CASE OF AN UNINCORPORATED ASSOCIATION OR BODY OF INDIVIDUALS, THE BENEFICIAL OWNER IS THE NATURAL PERSON (S), WHO, WHETHER ACTING ALONE OR TOGETHER, OR THROUGH ONE OR MORE JURIDICAL PERSON, HAS OWNERSHIP OF OR ENTITLEMENT TO MORE THAN FIFTEEN PERCENT OF THE PROPERTY OF CAPITAL OF PROFITS OF SUCH ASSOCIATION OR BODY OF INDIVIDUALS; 4. WHERE NO NATURAL PERSON IS IDENTIFIED UNDER (1) OR (2) OR (3) ABOVE, THE BENEFICIAL OWNER IS THE RELEVANT NATURAL PERSON WHO HOLDS THE POSITION OF SENIOR MANAGING OFFICIAL; 5. IN CASE OF TRUST, THE IDENTIFICATION OF BENEFICIAL OWNER (S) SHALL INCLUDE IDENTIFICATION OF THE AUTHOR OF THE TRUST, THE TRUSTEE, THE BENEFICIARIES WITH FIFTEEN PERCENT OR MORE INTEREST IN THE TRUST AND ANY OTHER NATURAL PERSON EXERCISING ULTIMATE EFFECTIVE CONTROL OVER THE TRUST THROUGH A CHAIN OF CONTROL OR OWNERSHIP. V. AN AGENT IS A PERSON EMPLOYED TO DO ANY ACT FOR ANOTHER, OR TO REPRESENT ANOTHER IN DEALINGS WITH THIRD PERSON. **CERTIFICATE:** IN ORDER TO AVAIL THE BENEFITS, VENDORS TO SUBMIT (ALONG WITH OFFER) THE SELF-CERTIFICATION THAT THE ITEM OFFERED MEETS THE CONTENT REQUIREMENT FOR CLASS-I/ CLASS-II LOCAL SUPPLIER AS THE CASE MAY BE, INDICATING THE PERCENTAGE OF LOCAL CONTENT. AND SHALL GIVE DETAILS OF LOCATION AT WHICH THE LOCAL VALUE ADDITION IS MADE (refer attached Make in India (Model Certificate no I).	
47.	13.1 "FORCE MAJEURE" SHALL MEAN CIRCUMSTANCE WHICH IS: A) BEYOND CONTROL OF EITHER OF THE PARTIES TO CONTRACT, B) EITHER OF THE PARTIES COULD NOT REASONABLY HAVE PROVIDED AGAINST THE EVENT BEFORE ENTERING INTO THE CONTRACT, C) HAVING ARISEN, EITHER OF THE PARTIES COULD NOT REASONABLY HAVE AVOIDED OR OVERCOME, AND D) IS NOT SUBSTANTIALLY ATTRIBUTABLE TO EITHER OF THE PARTIES AND PREVENTS THE PERFORMANCE OF THE CONTRACT SUCH CIRCUMSTANCES INCLUDE BUT SHALL NOT BE LIMITED TO: I) WAR, HOSTILITIES, INVASION, ACT OF FOREIGN ENEMIES. II) REBELLION, TERRORISM, REVOLUTION, INSURRECTION, MILITARY OR USURPED POWER, OR CIVIL WAR. III) RIOT, COMMOTION OR DISORDER BY PERSONS OTHER THAN THE CONTRACTOR'S PERSONNEL AND OTHER EMPLOYEES OF THE CONTRACTOR AND SUB-CONTRACTORS. IV) STRIKE OR LOCKOUT NOT SOLELY INVOLVING THE CONTRACTOR'S PERSONNEL AND OTHER EMPLOYEES OF THE CONTRACTOR AND SUB-CONTRACTORS. V) ENCOUNTERING MUNITIONS OF WAR, EXPLOSIVE MATERIALS, IONIZING RADIATION OR CONTAMINATION BY RADIO-ACTIVITY, EXCEPT AS MAY BE ATTRIBUTABLE TO THE CONTRACTOR'S USE OF SUCH MUNITIONS, EXPLOSIVES, RADIATION OR RADIO- ACTIVITY. VI) NATURAL CATASTROPHES SUCH AS EARTHQUAKE, TSUNAMI, VOLCANIC ACTIVITY, HURRICANE OR TYPHOON, FLOOD, FIRE, CYCLONES ETC. VII) EPIDEMIC, PANDEMIC ETC 13.2 THE FOLLOWING EVENTS ARE EXPLICITLY EXCLUDED FROM FORCE MAJEURE AND ARE SOLELY THE RESPONSIBILITIES OF THE NON-PERFORMING PARTY: A) ANY STRIKE, WORK-TO-RULE ACTION, GO-SLOW OR SIMILAR LABOUR DIFFICULTY (B) LATE DELIVERY OF EQUIPMENT OR MATERIAL (UNLESS CAUSED BY FORCE MAJEURE EVENT) AND (C) ECONOMIC HARDSHIP. 13.3 IF EITHER PARTY IS PREVENTED, HINDERED OR DELAYED FROM OR IN PERFORMING ANY OF ITS OBLIGATIONS UNDER THE CONTRACT BY AN EVENT OF FORCE MAJEURE, THEN IT SHALL NOTIFY THE OTHER IN WRITING OF THE OCCURRENCE OF SUCH EVENT AND THE CIRCUMSTANCES THEREOF WITHIN 15 (FIFTEEN) DAYS AFTER THE OCCURRENCE OF SUCH EVENT. 13.4 THE PARTY WHO HAS GIVEN SUCH NOTICE SHALL BE EXCUSED FROM THE PERFORMANCE OR PUNCTUAL PERFORMANCE OF ITS OBLIGATIONS UNDER THE CONTRACT FOR SO LONG AS THE RELEVANT EVENT OF FORCE MAJEURE CONTINUES AND TO THE EXTENT THAT SUCH PARTY'S PERFORMANCE IS PREVENTED, HINDERED OR DELAYED. THE TIME FOR COMPLETION SHALL BE EXTENDED BY A PERIOD OF TIME EQUAL TO PERIOD OF DELAY CAUSED DUE TO SUCH FORCE MAJEURE EVENT. 13.5 DELAY OR NON-PERFORMANCE BY EITHER PARTY HERETO CAUSED BY THE OCCURRENCE OF ANY EVENT OF FORCE MAJEURE SHALL NOT I) CONSTITUTE A DEFAULT OR BREACH OF THE CONTRACT. II) GIVE RISE TO ANY CLAIM FOR DAMAGES OR ADDITIONAL COST EXPENSE OCCASIONED THEREBY, IF AND TO THE EXTENT THAT SUCH DELAY OR NON-PERFORMANCE IS CAUSED BY THE OCCURRENCE OF AN EVENT OF FORCE MAJEURE. 13.6 BHEL AT ITS DISCRETION MAY CONSIDER SHORT CLOSURE OF CONTRACT AFTER 1 YEAR OF IMPOSITION OF FORCE MAJEURE IN LINE WITH EXTANT GUIDELINES. IN ANY CASE, SUPPLIER/VENDOR CANNOT CONSIDER DEEMED SHORT-CLOSURE AFTER 1 YEAR OF IMPOSITION OF FORCE MAJEURE.	
48.	**FRAUD PREVENTION POLICY :** THE BIDDER ALONG WITH ITS ASSOCIATE/ COLLABORATORS/ SUB-CONTRACTORS/ SUB-VENDORS/ CONSULTANTS/ SERVICE PROVIDERS SHALL STRICTLY ADHERE TO BHEL FRAUD PREVENTION POLICY DISPLAYED ON BHEL WEBSITE WWW.BHEL.COM AND SHALL IMMEDIATELY BRING TO THE NOTICE OF BHEL MANAGEMENT ABOUT ANY FRAUD OR SUSPECTED FRAUD AS SOON AS IT COMES TO THEIR NOTICE.	
49.	**SHORT SHIPMENTS/ WARRANTY/GUARANTEE REPLACEMENTS**: IN CASE OF ANY SHORT SHIPMENT DURING INITIAL SUPPLY WHICH IS SUBSEQUENTLY DISPATCHED BY THE VENDOR OR ANY GUARANTEE / WARRANTY REPLACEMENTS SHALL BE DISPATCHED ON "FOR-BHEL STORES/DESIGNATED DESTINATION" BASIS FOR INDIGENOUS	

	ITEMS. TAXES, IF ANY PAID BY INDIGENOUS VENDOR FOR GUARANTEE /WARRANTEE REPLACEMENT, REPAIR ACTIVITY EXCLUDING SHORT SUPPLY SHALL BE TO VENDOR'S ACCOUNT ONLY. THE VENDOR HAS TO RAISE A CREDIT NOTE FOR SHORT SUPPLIED QUANTITY AS PER GST PROVISIONS.	
50.	**E WAY BILL**: THE SUPPLIER HAS TO ARRANGE FOR E WAY BILL AS APPLICABLE FOR ANY MOVEMENT OF GOODS ALONG WITH OTHER PRESCRIBED DOCUMENTS AS PER GST LAW. THE SUPPLIER HAS ALSO TO COMPLY WITH ANY AMENDMENT AS PRESCRIBED FROM TIME TO TIME UNDER E WAY BILL RULE. ANY FINANCIAL IMPLICATION ARISES ON BHEL DUE TO NONCOMPLIANCE OF E WAY BILL RULE WILL BE PASSED ON TO THE SUPPLIER.	
51.	THE BIDDER DECLARES THAT THEY WILL NOT ENTER INTO ANY ILLEGAL OR UNDICLOSED AGREEMENT OR UNDERSTANDING, WHETHER FORMAL OR INFORMAL WITH OTHER BIDDER (S). THIS APPLIES IN PARTICULAR TO PRICES, SPECIFICATIONS, CERTIFICATIONS, SUBSIDIARY CONTRACTS, SUBMISSION OR NON- SUBMISSION OF BIDS OR ANY OTHER ACTIONS TO RESTRICT COMPETITIVENES OR TO INTRODUE CARTELIZATION IN THE BIDDING PROCESS. IN CASE, THE BIDDER IS FOUND HAVING INDULGED IN ABOVE ACTIVITIES, SUITABLE ACTION SHALL BE TAKEN BY BHEL AS PER EXTANT POLICIES / GUIDELINES.	
52.	THE BIDDER SHALL REGISTER THEMSELVES ON GEM PORTAL AND SHALL QUOTE THEIR GEM SELLER ID IN THEIR OFFER. GEM SELLER ID IS MANDATORY FOR PLACEMENT OF PURCHASE ORDER EXCEPT IN CASES WHERE FREE ISSUE MATERIAL IS TO BE ISSUED BY BHEL .	
53.	**REJECTION/REPLACEMENT:** THE SELLER SHALL ARRANGE REPLACEMENT / REPAIR UNDER ITS OBLIGATION UNDER THE CONTRACT. SELLER SHALL BE GIVEN GROUND RENT FREE PERIOD OF 90 DAYS FROM THE DATE OF REJECTION TO LIFT REJECTED MATERIAL. BEYOND 90 DAYS, A GROUND RENT OF 0.25% OF VALUE OF REJECTED MATERIAL PER WEEK WILL BE LEVIED FOR A MAXIMUM PERIOD OF 4 WEEKS. BEYOND THIS PERIOD SUPPLIER FORFEITS THEIR RIGHT TO THE MATERIALS.	
54.	**TREATMENT OF CASES REGARDING CONFLICT OF INTEREST:** THE BIDDER NOTES THAT A CONFLICT OF INTEREST WOULD SAID TO HAVE OCCURRED IN THE TENDER PROCESS AND EXECUTION OF THE RESULTANT CONTRACT, IN CASE OF ANY OF THE FOLLOWING SITUATIONS: I) IF ITS PERSONNEL HAVE A CLOSE PERSONAL, FINANCIAL, OR BUSINESS RELATIONSHIP WITH ANY PERSONNEL OF BHEL WHO ARE DIRECTLY OR INDIRECTLY RELATED TO THE PROCUREMENT OR EXECUTION PROCESS OF THE CONTRACT, WHICH CAN AFFECT THE DECISION OF BHEL DIRECTLY OR INDIRECTLY; II) THE BIDDER (OR HIS ALLIED FIRM) PROVIDED SERVICES FOR THE NEED ASSESSMENT/ PROCUREMENT PLANNING OF THE TENDER PROCESS IN WHICH IT IS PARTICIPATING; III) PROCUREMENT OF GOODS DIRECTLY FROM THE MANUFACTURERS/ SUPPLIERS SHALL BE PREFERRED. HOWEVER, IF THE OEM/ PRINCIPAL INSISTS ON ENGAGING THE SERVICES OF AN AGENT, SUCH AGENT SHALL NOT BE ALLOWED TO REPRESENT MORE THAN ONE MANUFACTURER/ SUPPLIER IN THE SAME TENDER. MOREOVER, EITHER THE AGENT COULD BID ON BEHALF OF THE MANUFACTURER/ SUPPLIER OR THE MANUFACTURER/ SUPPLIER COULD BID DIRECTLY BUT NOT BOTH. IN CASE BIDS ARE RECEIVED FROM BOTH THE MANUFACTURER/ SUPPLIER AND THE AGENT, BID RECEIVED FROM THE AGENT SHALL BE IGNORED. HOWEVER, THIS SHALL NOT DEBAR MORE THAN ONE AUTHORISED DISTRIBUTOR (WITH/ OR WITHOUT THE OEM) FROM QUOTING EQUIPMENT MANUFACTURED BY AN ORIGINAL EQUIPMENT MANUFACTURER (OEM) IN PROCUREMENTS UNDER A PROPRIETARY ARTICLE CERTIFICATE. IV) A BIDDER PARTICIPATES IN MORE THAN ONE BID IN THIS TENDER PROCESS. PARTICIPATION IN ANY CAPACITY BY A BIDDER (INCLUDING THE PARTICIPATION OF A BIDDER AS A PARTNER/ JV MEMBER OR SUB-CONTRACTOR IN ANOTHER BID OR VICE-VERSA) IN MORE THAN ONE BID SHALL RESULT IN THE DISQUALIFICATION OF ALL BIDS IN WHICH HE IS A PARTY. HOWEVER, THIS DOES NOT LIMIT THE PARTICIPATION OF AN ENTITY AS A SUB-CONTRACTOR IN MORE THAN ONE BID IF HE IS NOT BIDDING INDEPENDENTLY IN HIS OWN NAME OR AS A MEMBER OF A JV. THE BIDDER DECLARES THAT THEY HAVE READ AND UNDERSTOOD THE ABOVE ASPECTS, AND THE BIDDER CONFIRMS THAT SUCH CONFLICT OF INTEREST DOES NOT EXIST AND UNDERTAKES THAT THEY WILL NOT ENTER INTO ANY ILLEGAL OR UNDISCLOSED AGREEMENT OR UNDERSTANDING, WHETHER FORMAL OR INFORMAL WITH OTHER BIDDER(S), IN THIS REGARD. THIS APPLIES IN PARTICULAR TO PRICES, SPECIFICATIONS, CERTIFICATIONS, SUBSIDIARY CONTRACTS, SUBMISSION OR NON-SUBMISSION OF BIDS OR ANY OTHER ACTIONS TO RESTRICT COMPETITIVENESS OR TO INTRODUCE CARTELIZATION IN THE BIDDING PROCESS. IN CASE, THE BIDDER IS FOUND HAVING INDULGED IN ABOVE ACTIVITIES, THE SAME WILL BE CONSIDERED AS A VIOLATION OF THE TENDER CONDITIONS, AND SUITABLE ACTION SHALL BE TAKEN BY BHEL AS PER EXTANT POLICIES/ GUIDELINES.	
55.	VENDOR MUST VISIT OUR WEBSITE https://herp.bhel.com REGULARILY FOR ENQUIRY/PO/CLARIFICATIONS/FOR ANY LATEST UPDATES.	
56.	MSME VENDORS CAN AVAIL BENEFITS OF PAYMENT THROUGH TREDS.	
57.	"THE OFFERS OF THE BIDDERS WHO ARE UNDER SUSPENSION AS ALSO THE OFFERS OF THE BIDDERS, WHO ENGAGE THE SERVICES OF THE FIRMS DEBARRED ACROSS BHEL, SHALL BE REJECTED. THE LIST OF FIRMS DEBARRED ACROSS BHEL IS AVAILABLE ON BHEL WEBSITE WWW.BHEL.COM. 1.0 INTEGRITY COMMITMENT, PERFORMANCE OF THE CONTRACT AND PUNITIVE ACTION THEREOF: 1.1. COMMITMENT BY BHEL: BHEL COMMITS TO TAKE ALL MEASURES NECESSARY TO PREVENT CORRUPTION IN CONNECTION WITH THE TENDER PROCESS AND EXECUTION OF THE CONTRACT. BHEL WILL DURING THE TENDER PROCESS TREAT ALL BIDDER(S) IN A TRANSPARENT AND FAIR MANNER, AND WITH EQUITY. 1.2. COMMITMENT BY BIDDER/ SUPPLIER/ CONTRACTOR: 1.2.1. THE BIDDER/ SUPPLIER/ CONTRACTOR COMMIT TO TAKE ALL MEASURES TO PREVENT CORRUPTION AND WILL NOT DIRECTLY OR INDIRECTLY INFLUENCE ANY DECISION OR BENEFIT WHICH HE IS NOT LEGALLY ENTITLED TO NOR WILL ACT OR OMIT IN ANY MANNER WHICH TANTAMOUNT TO AN OFFENCE PUNISHABLE UNDER ANY PROVISION OF THE INDIAN PENAL CODE, 1860 OR ANY OTHER LAW IN FORCE IN INDIA. 1.2.2. THE BIDDER/ SUPPLIER/ CONTRACTOR WILL, WHEN PRESENTING HIS BID, DISCLOSE ANY AND ALL PAYMENTS HE HAS MADE, AND IS COMMITTED TO OR INTENDS TO MAKE TO AGENTS, BROKERS OR ANY OTHER INTERMEDIARIES IN CONNECTION WITH THE AWARD OF THE CONTRACT AND SHALL ADHERE TO RELEVANT GUIDELINES ISSUED FROM TIME TO TIME BY GOVT. OF INDIA/ BHEL. 1.2.3. THE BIDDER/ SUPPLIER/ CONTRACTOR WILL PERFORM/ EXECUTE THE CONTRACT AS PER THE CONTRACT TERMS & CONDITIONS AND WILL NOT DEFAULT WITHOUT ANY REASONABLE CAUSE, WHICH CAUSES LOSS OF BUSINESS/ MONEY/ REPUTATION, TO BHEL. IF ANY BIDDER/ SUPPLIER/ CONTRACTOR DURING PRE-TENDERING/ TENDERING/ POST TENDERING/ AWARD/ EXECUTION/ POST-EXECUTION STAGE INDULGES IN MALPRACTICES, CHEATING, BRIBERY, FRAUD OR AND OTHER MISCONDUCT OR FORMATION OF CARTEL SO AS TO INFLUENCE THE BIDDING PROCESS OR INFLUENCE THE PRICE OR ACTS OR OMITS IN ANY MANNER WHICH TANTAMOUNT TO AN OFFENCE PUNISHABLE UNDER ANY PROVISION OF THE INDIAN PENAL CODE, 1860 OR ANY OTHER LAW IN FORCE IN INDIA, THEN, ACTION MAY BE TAKEN AGAINST SUCH BIDDER/ SUPPLIER/ CONTRACTOR AS PER EXTANT GUIDELINES OF THE COMPANY AVAILABLE ON WWW. BHEL.COM AND/OR UNDER APPLICABLE LEGAL PROVISIONS".	
58.	**BID SECURITY OR EARNEST MONEY DEPOSIT (EMD):** TO SAFE GUARD AGAINST A BIDDER'S WITHDRAWING OR ALTERING ITS/ HIS BID DURING THE BID VALIDITY PERIOD, BID SECURITY [ALSO KNOWN AS EARNEST MONEY DEPOSIT (EMD)] SHALL BE OBTAINED FROM THE BIDDERS ALONG WITH THEIR BIDS (EXCEPT MICRO AND SMALL ENTERPRISES (MSES) OR STARTUPS AS RECOGNIZED BY DEPARTMENT FOR PROMOTION OF INDUSTRY AND INTERNAL TRADE (DPIIT)). THE AMOUNT OF EMD SHALL BE AS MENTIONED IN ENQUIRY. **1. MODES OF DEPOSIT** A) THE EMD MAY BE ACCEPTED ONLY IN THE FOLLOWING FORMS AND THE SAME MUST BE SUBMITTED BEFORE TENDER OPENING: (I) ELECTRONIC FUND TRANSFER CREDITED IN BHEL ACCOUNT. (II) BANKER'S CHEQUE/ PAY ORDER/ DEMAND DRAFT, IN FAVOUR OF BHEL. (III) FIXED DEPOSIT RECEIPT (FDR).(IN THE NAME OF " BIDDER'S NAME A/C BHEL'') (IV) BANK GUARANTEE FROM ANY OF THE SCHEDULED BANKS. (V) INSURANCE SURETY BONDS. B) IN CASE THE EMD IS MORE THAN RUPEES TWO LAKH AND IN CASE OF FOREIGN BIDDERS, IT MAY BE IN THE FORM OF A BANK GUARANTEE (IN EQUIVALENT FOREIGN EXCHANGE AMOUNT, IN CASE OF FOREIGN BIDDERS) ISSUED/ CONFIRMED FROM ANY OF THE SCHEDULED COMMERCIAL BANK IN INDIA IN AN ACCEPTABLE FORM. THE EMD SHALL REMAIN VALID FOR A PERIOD OF 45 (FORTY-FIVE) DAYS BEYOND THE FINAL BID VALIDITY PERIOD. **2. FORFEITURE OF EMD**	

	I) A BIDDER'S EMD WILL BE FORFEITED IF THE BIDDER WITHDRAWS OR AMENDS ITS/HIS TENDER OR IMPAIRS OR DEROGATES FROM THE TENDER IN ANY RESPECT WITHIN THE PERIOD OF VALIDITY OF THE TENDER OR IF THE SUCCESSFUL BIDDER FAILS TO FURNISH THE REQUIRED PERFORMANCE SECURITY WITHIN THE SPECIFIED PERIOD MENTIONED IN THE TENDER. (II) EMD BY THE TENDERER SHALL BE WITHHELD IN CASE ANY ACTION ON THE BIDDER IS ENVISAGED UNDER THE PROVISIONS OF EXTANT "GUIDELINES ON SUSPENSION OF BUSINESS DEALINGS WITH SUPPLIERS/ CONTRACTORS" AND FORFEITED/ RELEASED BASED ON THE ACTION AS DETERMINED UNDER THESE GUIDELINES. **3. RETURN OF EMD** (I) BID SECURITIES OF THE UNSUCCESSFUL BIDDERS SHALL BE RETURNED TO BIDDER AT THE EARLIEST AFTER EXPIRY OF THE FINAL BID VALIDITY PERIOD AND LATEST BY THE 30TH DAY AFTER THE AWARD OF THE CONTRACT. HOWEVER, IN CASE OF TWO PACKET OR TWO STAGE BIDDING, BID SECURITIES OF UNSUCCESSFUL BIDDERS DURING FIRST STAGE I.E. TECHNICAL EVALUATION ETC. SHALL BE RETURNED WITHIN 30 DAYS OF DECLARATION OF RESULT OF FIRST STAGE I.E. TECHNICAL EVALUATION ETC. (II) BID SECURITY SHALL BE REFUNDED TO THE SUCCESSFUL BIDDER ON CONCLUSION OF THE ORDER/ RECEIPT OF A PERFORMANCE SECURITY (IF CALLED IN THE TENDER). (III) EMD SHALL NOT CARRY ANY INTEREST.	
59.	**PERFORMANCE SECURITY (PS):** TO ENSURE DUE PERFORMANCE OF THE CONTRACT, PERFORMANCE BANK GUARANTEE (PBG) OR SECURITY DEPOSIT (SD), HEREAFTER REFERRED AS PERFORMANCE SECURITY SHALL BE OBTAINED FROM THE SUCCESSFUL BIDDER AWARDED THE CONTRACT. THE PERFORMANCE SECURITY OF REQUIRED AMOUT IS TO BE SUBMITTED BY THE DATE SPECIFIED IN THE PO/CONTRACT. 1**. MODES OF DEPOSIT:** A) PERFORMANCE SECURITY MAY BE FURNISHED IN THE FOLLOWING FORMS: (I) LOCAL CHEQUES OF SCHEDULED BANKS (SUBJECT TO REALIZATION)/ PAY ORDER/ DEMAND DRAFT/ ELECTRONIC FUND TRANSFER IN FAVOUR OF BHEL. (II) BANK GUARANTEE FROM SCHEDULED BANKS / PUBLIC FINANCIAL INSTITUTIONS AS DEFINED IN THE COMPANIES ACT. THE BANK GUARANTEE FORMAT SHOULD HAVE THE APPROVAL OF BHEL. (III) FIXED DEPOSIT RECEIPT ISSUED BY SCHEDULED BANKS / PUBLIC FINANCIAL INSTITUTIONS AS DEFINED IN THE COMPANIES ACT (FDR SHOULD BE IN THE NAME OF THE **CONTRACTOR, A/C BHEL**). (IV) SECURITIES AVAILABLE FROM INDIAN POST OFFICES SUCH AS NATIONAL SAVINGS CERTIFICATES, KISAN VIKAS PATRAS ETC. (HELD IN THE NAME OF CONTRACTOR FURNISHING THE SECURITY AND DULY ENDORSED/ HYPOTHECATED/ PLEDGED, AS APPLICABLE, IN FAVOUR OF BHEL). (V) INSURANCE SURETY BOND. (NOTE: BHEL WILL NOT BE LIABLE OR RESPONSIBLE IN ANY MANNER FOR THE COLLECTION OF INTEREST OR RENEWAL OF THE DOCUMENTS OR IN ANY OTHER MATTER CONNECTED THEREWITH) B) IN CASE OF GTE TENDERS, THE PERFORMANCE SECURITY SHALL BE IN THE SAME CURRENCY AS THE CONTRACT AND MUST CONFORM TO UNIFORM RULES FOR DEMAND GUARANTEES (URDG 758) - AN INTERNATIONAL CONVENTION REGULATING INTERNATIONAL SECURITIES. (C) PERFORMANCE SECURITY IS TO BE FURNISHED WITHIN A SPECIFIED DATE (GENERALLY 14(FOURTEEN) DAYS AFTER NOTIFICATION OF THE AWARD) AND IT SHOULD REMAIN VALID FOR A PERIOD OF 60 (SIXTY) DAYS BEYOND THE DATE OF COMPLETION OF ALL CONTRACTUAL OBLIGATIONS OF THE SUPPLIER, INCLUDING WARRANTY OBLIGATIONS. "BIDDER AGREES TO SUBMIT PERFORMANCE SECURITY REQUIRED FOR EXECUTION OF THE CONTRACT WITHIN THE TIME PERIOD MENTIONED. IN CASE OF DELAY IN SUBMISSION OF PERFORMANCE SECURITY, ENHANCED PERFORMANCE SECURITY WHICH WOULD INCLUDE INTEREST (REPO RATE+4%) FOR THE DELAYED PERIOD, SHALL BE SUBMITTED BY THE BIDDER. FURTHER, IF PERFORMANCE SECURITY IS NOT SUBMITTED TILL SUCH TIME THE FIRST BILL BECOMES DUE, THE AMOUNT OF PERFORMANCE SECURITY DUE SHALL BE RECOVERED AS PER TERMS DEFINED IN NIT CONTRACT, FROM THE BILLS ALONG WITH DUE INTEREST" 2. **FORFEITURE OF PERFORMANCE SECURITY:** THE PERFORMANCE SECURITY WILL BE FORFEITED AND CREDITED TO BHEL'S ACCOUNT IN THE EVENT OF A BREACH OF CONTRACT BY THE SUPPLIER. 3. **RETURN OF PERFORMANCE SECURITY (PS):** PS SHALL BE REFUNDED TO THE BIDDER WITHOUT INTEREST, AFTER HE DULY PERFORMS AND COMPLETES THE CONTRACT IN ALL RESPECTS BUT NOT LATER THAN 60(SIXTY) DAYS OF COMPLETION OF ALL SUCH OBLIGATIONS INCLUDING THE WARRANTY UNDER THE CONTRACT. **4. THE PERFORMANCE SECURITY SHALL NOT CARRY ANY INTEREST.**	
60.	**BREACH OF CONTRACT, REMEDIES AND TERMINATION:** **16.1 BREACH OF CONTRCAT:** THE FOLLOWING SHALL AMOUNT TO BREACH OF CONTRACT: I. NON-SUPPLY OF MATERIAL/ NON-COMPLETION OF WORK BY THE SUPPLIER/VENDOR WITHIN SCHEDULED DELIVERY/ COMPLETION PERIOD AS PER CONTRACT OR AS EXTENDED FROM TIME TO TIME. II. THE SUPPLIER/VENDOR FAILS TO PERFORM AS PER THE ACTIVITY SCHEDULE AND THERE ARE SUFFICIENT REASONS EVEN BEFORE EXPIRY OF THE DELIVERY/ COMPLETION PERIOD TO JUSTIFY THAT SUPPLIES SHALL BE INORDINATELY DELAYED BEYOND CONTRACTUAL DELIVERY/ COMPLETION PERIOD. III. THE SUPPLIER/VENDOR DELIVERS EQUIPMENT/ MATERIAL NOT OF THE CONTRACTED QUALITY. IV. THE SUPPLIER/VENDOR FAILS TO REPLACE THE DEFECTIVE EQUIPMENT/ MATERIAL/ COMPONENT AS PER GUARANTEE CLAUSE. V. WITHDRAWAL FROM OR ABANDONMENT OF THE WORK BY THE SUPPLIER/VENDOR BEFORE COMPLETION AS PER CONTRACT. VI. ASSIGNMENT, TRANSFER, SUBLETTING OF CONTRACT BY THE SUPPLIER/VENDOR WITHOUT BHEL'S WRITTEN PERMISSION RESULTING IN TERMINATION OF CONTRACT OR PART THEREOF BY BHEL. VII. NON-COMPLIANCE TO ANY CONTRACTUAL CONDITION OR ANY OTHER DEFAULT ATTRIBUTABLE TO SUPPLIER/VENDOR. VIII. ANY OTHER REASON(S) ATTRIBUTABLE TO VENDOR TOWARDS FAILURE OF PERFORMANCE OF CONTRACT. IN CASE OF BREACH OF CONTRACT, BHEL SHALL HAVE THE RIGHT TO TERMINATE THE PURCHASE ORDER/ CONTRACT EITHER IN WHOLE OR IN PART THEREOF WITHOUT ANY COMPENSATION TO THE SUPPLIER/VENDOR. IX. ANY OF THE DECLARATIONS FURNISHED BY THE CONTRACTOR AT THE TIME OF BIDDING AND/ OR ENTERING INTO THE CONTRACT FOR SUPPLY ARE FOUND UNTRUTHFUL AND SUCH DECLARATIONS WERE OF A NATURE THAT COULD HAVE RESULTED IN NON-AWARD OF CONTRACT TO THE CONTRACTOR OR COULD EXPOSE BHEL AND/ OR OWNER TO ADVERSE CONSEQUENCES, FINANCIAL OR OTHERWISE. X. SUPPLIER/VENDOR IS CONVICTED OF ANY OFFENCE INVOLVING CORRUPT BUSINESS PRACTICES, ANTINATIONAL ACTIVITIES OR ANY SUCH OFFENCE THAT COMPROMISES THE BUSINESS ETHICS OF BHEL, IN VIOLATION OF THE INTEGRITY PACT ENTERED INTO WITH BHEL HAS THE POTENTIAL TO HARM THE OVERALL BUSINESS OF BHEL/ OWNER **NOTE**- ONCE BHEL CONSIDERS THAT A BREACH OF CONTRACT HAS OCCURRED ON THE PART OF SUPPLIER/VENDOR, BHEL SHALL NOTIFY THE SUPPLIER/VENDOR BY WAY OF NOTICE IN THIS REGARD. CONTRACTOR SHALL BE GIVEN AN OPPORTUNITY TO RECTIFY THE REASONS CAUSING THE BREACH OF CONTRACT WITHIN A PERIOD OF 14 DAYS. IN CASE THE CONTRACTOR FAILS TO REMEDY THE BREACH, AS MENTIONED IN THE NOTICE, TO THE SATISFACTION OF BHEL, BHEL SHALL HAVE THE RIGHT TO TAKE RECOURSE TO ANY OF THE REMEDIAL ACTIONS AVAILABLE TO IT UNDER THE RELEVANT PROVISIONS OF CONTRACT **16.2 REMEDIES IN CASE OF BREACH OF CONTRACT.** I.WHEREIN THE PERIOD AS STIPULATED IN THE NOTICE ISSUED UNDER CLAUSE 14.1 HAS EXPIRED AND SUPPLIER/VENDOR HAS FAILED TO REMEDY THE BREACH, BHEL WILL HAVE THE RIGHT TO TERMINATE THE CONTRACT ON THE GROUND OF "BREACH OF CONTRACT" WITHOUT ANY FURTHER NOTICE TO CONTRACTOR. II. UPON TERMINATION OF CONTRACT, BHEL SHALL BE ENTITLED TO RECOVER AN AMOUNT EQUIVALENT TO 10% OF THE CONTRACT VALUE FOR THE DAMAGES ON ACCOUNT OF BREACH OF CONTRACT COMMITTED BY THE SUPPLIER/VENDOR. THIS AMOUNT SHALL BE RECOVERED BY WAY OF ENCASHING THE SECURITY INSTRUMENTS LIKE PERFORMANCE BANK GUARANTEE ETC AVAILABLE WITH BHEL AGAINST THE SAID CONTRACT. IN CASE THE VALUE OF THE SECURITY INSTRUMENTS AVAILABLE IS LESS THAN 10% OF THE CONTRACT VALUE, THE BALANCE AMOUNT SHALL BE RECOVERED FROM OTHER FINANCIAL REMEDIES (I.E. AVAILABLE BILLS OF THE SUPPLIER/VENDOR, RETENTION AMOUNT, FROM THE MONEY DUE TO THE SUPPLIER/VENDOR ETC. WITH BHEL) OR THE OTHER LEGAL REMEDIES SHALL BE PURSUED	

	III. WHEREVER THE VALUE OF SECURITY INSTRUMENTS LIKE PERFORMANCE BANK GUARANTEE AVAILABLE WITH BHEL AGAINST THE SAID CONTRACT IS 10% OF THE CONTRACT VALUE OR MORE, SUCH SECURITY INSTRUMENTS TO THE EXTENT OF 10% CONTRACT VALUE WILL BE ENCASHED. IN CASE NO SECURITY INSTRUMENTS ARE AVAILABLE OR THE VALUE OF THE SECURITY INSTRUMENTS AVAILABLE IS LESS THAN 10% OF THE CONTRACT VALUE, THE 10% OF THE CONTRACT VALUE OR THE BALANCE AMOUNT, AS THE CASE MAY BE, WILL BE RECOVERED IN ALL OR ANY OF THE FOLLOWING MANNERS: IV. IN CASE THE AMOUNT RECOVERED UNDER SUB CLAUSE (A) ABOVE IS NOT SUFFICIENT TO FULFIL THE AMOUNT RECOVERABLE THEN; A DEMAND NOTICE TO DEPOSIT THE BALANCE AMOUNT WITHIN 30 DAYS SHALL BE ISSUED TO SUPPLIER/VENDOR. V. IF SUPPLIER/VENDOR FAILS TO DEPOSIT THE BALANCE AMOUNT WITHIN THE PERIOD AS PRESCRIBED IN DEMAND NOTICE, FOLLOWING ACTION SHALL BE TAKEN FOR RECOVERY OF THE BALANCE AMOUNT: A. FROM DUES AVAILABLE IN THE FORM OF BILLS PAYABLE TO DEFAULTED SUPPLIER/VENDOR AGAINST THE SAME CONTRACT. B. IF IT IS NOT POSSIBLE TO RECOVER THE DUES AVAILABLE FROM THE SAME CONTRACT OR DUES ARE INSUFFICIENT TO MEET THE RECOVERABLE AMOUNT, BALANCE AMOUNT SHALL BE RECOVERED FROM ANY MONEY(S) PAYABLE TO SUPPLIER/VENDOR UNDER ANY CONTRACT WITH OTHER UNITS OF BHEL INCLUDING RECOVERY FROM SECURITY DEPOSITS OR ANY OTHER DEPOSIT AVAILABLE IN THE FORM OF SECURITY INSTRUMENTS OF ANY KIND AGAINST SECURITY DEPOSIT OR EMD. C. IN-CASE RECOVERIES ARE NOT POSSIBLE WITH ANY OF THE ABOVE AVAILABLE OPTIONS, LEGAL ACTION SHALL BE INITIATED FOR RECOVERY AGAINST DEFAULTED SUPPLIER/VENDOR. VI. IT IS AN AGREED TERM OF CONTRACT THAT THIS AMOUNT SHALL BE A GENUINE PRE-ESTIMATE OF DAMAGES THAT BHEL WOULD INCUR IN COMPLETION OF BALANCE CONTRACTUAL OBLIGATION OF THE CONTRACT THROUGH ANY OTHER AGENCY AND BHEL WILL NOT BE REQUIRED TO FURNISH ANY OTHER EVIDENCE TO THE SUPPLIER/VENDOR FOR THE PURPOSE OF ESTIMATION OF DAMAGES. VII. IN ADDITION TO THE ABOVE, IMPOSITION OF LIQUIDATED DAMAGES, DEBARMENT, TERMINATION, DE-SCOPING, SHORT-CLOSURE, ETC., SHALL BE APPLIED AS PER PROVISIONS OF THE CONTRACT. **NOTE:** 1) THE DEFAULTING SUPPLIER/VENDOR SHALL NOT BE ELIGIBLE FOR PARTICIPATION IN ANY OF THE FUTURE ENQUIRIES FLOATED BY BHEL TO COMPLETE THE BALANCE WORK. THE DEFAULTING CONTRACTOR SHALL MEAN AND INCLUDE: (A) IN CASE DEFAULTED SUPPLIER/VENDOR IS THE SOLE PROPRIETORSHIP FIRM, ANY SOLE PROPRIETORSHIP FIRM OWNED BY SAME SOLE PROPRIETOR (B) IN CASE DEFAULTED SUPPLIER/VENDOR IS THE PARTNERSHIP FIRM, ANY FIRM COMPRISING OF SAME PARTNERS/ SOME OF THE SAME PARTNERS ; OR SOLE PROPRIETORSHIP FIRM OWNED BY ANY PARTNER(S) AS A SOLE PROPRIETOR.	
61.	**NO INTEREST PAYABLE TO CONTRACTOR:** NOTWITHSTANDING ANYTHING TO THE CONTRARY CONTAINED IN ANY OTHER DOCUMENT COMPRISING IN THE CONTRACT, NO INTEREST SHALL BE PAYABLE BY BHEL TO CONTRACTOR ON ANY MONEYS OR BALANCES INCLUDING BUT NOT LIMITED TO THE SECURITY DEPOSIT, EMD, RETENTION MONEY, RA BILLS OR THE FINAL BILL, OR ANY AMOUNT WITHHELD AND/OR APPROPRIATED BY BHEL ETC., WHICH BECOMES OR AS THE CASE MAY BE, IS ADJUDGED TO BE DUE FROM BHEL TO CONTRACTOR WHETHER UNDER THE CONTRACT OR OTHERWISE	
62.	**OVER RUN CHARGES:** NO OVERRUN CHARGES ARE APPLICABLE	
63.	**ORDER OF PRECEDENCE:** THE PURCHASE ORDER ALONG WITH ITS ANNEXURES THE NIT, ITS AMENDMENTS /CORRIGENDUM'S SHALL ALL TOGETHER CONSTITUTE THE ENTIRE CONTRACT BETWEEN THE PARTIES AND SHALL BE COMPLEMENTARY TO ONE ANOTHER. IN CASE OF ANY CONTRADICTION, THE ORDER OF PRECEDENCE SHALL BE AS BELOW: a. PURCHASE ORDER ALONG WITH ITS ANNEXURES b. AMENDMENTS/CLARIFICATIONS/CORRIGENDA/ERRATA ETC. ISSUED IN RESPECT OF THE TENDER DOCUMENTS BY BHEL. c. NIT	
64.	**OTHER POINTS:** YOU SHALL HAVE TO OBSERVE ALL WORK QUALITY, SAFETY REGULATIONS, GENERAL TECHNICAL GUIDE LINES AS STIPULATED IN RELEVANT CLAUSES TENDER SPECIFICATION. YOU SHALL SUBMIT PROGRESS REPORTS TO BHEL AS PER TENDER CONDITIONS, REVIEW THE PROGRAMME FROM TIME TO TIME AND TAKE SUITABLE STEPS TO MEET OVERALL PROJECT SCHEDULE, IN CONSULTATION WITH BHEL/ BIFCL ENGINEER VENDOR SHOULD FOLLOW THE AGREED TENDER TERM (CL. NO. 29.0 OF GTC) STRICTLY: -- "THE OFFERS OF THE BIDDERS WHO ARE ON THE BANNED LIST AS ALSO THE OFFER OF THE BIDDERS, WHO ENGAGE THE SERVICES OF THE BANNED FIRMS, SHALL BE REJECTED. THE LIST OF BANNED FIRMS IS AVAILABLE ON BHEL WEB SITE WWW.BHEL.COM)". ALL OTHER TERMS & CONDITIONS NOT COVERED HERE SHALL BE AS PER THOSE SPECIFIED IN THE TENDER DOCUMENT (NIT) ALONG WITH TCNS INCLUDING TECHNICAL SPECIFICATION, SPECIFIC CONDITIONS OF CONTRACT & GENERAL CONDITIONS OF CONTRACT. YOU ARE REQUESTED TO SEND US THE ACKNOWLEDGEMENT AS PER SPECIFIED FORMAT AND CONVEY YOUR UNQUALIFIED ACCEPTANCE TO THIS PURCHASE ORDER AS PER ENCLOSED ANNEXURE-X WITHIN 7 (SEVEN) DAYS ELSE IT WILL BE DEEMED ACCEPTED.	
65.	**FOR SUPPLY ORDERS PLACED ON INDIAN SUPPLIERS:** IRRESPECTIVE OF THE VALUE OF THE INVOICE AMOUNT, THE BIDDER / VENDOR SHOULD NECESSARILY UPLOAD THE DESPATCH & INVOICE DETAILS ON BHEL SUVIDHA PORTAL AT HTTPS://SUVIDHA.BHEL.IN/SUVIDHA/, PRIOR TO DESPATCH. ALL DOCUMENTS AS PER PO CHECKLIST , ALONG WITH ADDITIONAL DOCUMENTS (IF ANY), MUST BE UPLOADED ON THE PORTAL. IT IS MANDATORY THAT TAX INVOICES WITH A NET AMOUNT (INCLUDING TAXES) EXCEEDING RS FIVE LAKHS UPLOADED ON THE PORTAL ARE DIGITALLY SIGNED USING A CLASS 3 DIGITAL SIGNATURE CERTIFICATE (DSC) ISSUED BY A LICENSED CERTIFYING AUTHORITY. SUBMISSION OF INVOICE DOCUMENT IN HARD COPY IS ALLOWED FOR INVOICES WITH A NET AMOUNT (INCLUDING TAXES) EQUAL TO AND UPTO RS FIVE LAKHS , IN CASE THEY WERE NOT DIGITALLY SIGNED AND UPLOADED ON THE PORTAL. THE MATERIAL WILL NOT BE ACCEPTED INSIDE BHEL IN ABSENCE OF THE ABOVE	

66.	**GRIEVANCE REDRESSAL MECHANISM:** TO PROMOTE TRANSPARENCY AND ENSURE FAIR TREATMENT OF ALL BIDDERS, A STRUCTURED GRIEVANCE REDRESSAL MECHANISM IS IN PLACE TO ADDRESS ANY CONCERNS OR ISSUES ARISING DURING THE TENDERING PROCESS OR IN SUBSEQUENT BUSINESS DEALINGS WITH THE COMPANY. SUPPLIERS/CONTRACTORS ARE REQUESTED TO FOLLOW THE BELOW ESCALATION PROCESS FOR GRIEVANCE RESOLUTION: 1. **FIRST LEVEL**: ANY GRIEVANCE SHOULD INITIALLY BE ADDRESSED TO THE DESIGNATED DEALING OFFICER, WHOSE CONTACT DETAILS ARE PROVIDED IN THE NOTICE INVITING TENDER (NIT)/CONTRACT. **SECOND LEVEL**: IF THE ISSUE REMAINS UNRESOLVED, IT MAY BE ESCALATED BY LODGING A FORMAL GRIEVANCE THROUGH THE SUVIDHA PORTAL: HTTPS://SUVIDHA.BHEL.IN/SUVIDHA/. RESPONSES WILL BE PROVIDED IN ACCORDANCE WITH THE DEFINED ESCALATION MATRIX	

NOTE:

1. PLEASE FILL IN THIS FORMAT AND SEND COMPULSORILY ALONG WITH QUOTATION WITH VENDOR'S SEAL, SIGNATURE AND DATE.

SIGNATURE ALONG WITH SEAL AND DATE:

Umesh Kumar Gupta
DGM(Pur.)

Ashok Kr. Srivastava
DGM(Fin)

Annexure-1

INTEGRITY PACT

Between

Bharat Heavy Electricals Ltd. (BHEL), a company registered under the Companies Act 1956 and having its registered office at "BHEL House", Siri Fort, New Delhi - 110049 (India) hereinafter referred to as "The Principal", which expression unless repugnant to the context or meaning hereof shall include its successors or assigns of the ONE PART

and

_____, (description of the party along with address), hereinafter referred to as "The Bidder/ Contractor" which expression unless repugnant to the context or meaning hereof shall include its successors or assigns of the OTHER PART

Preamble

The Principal intends to award, under laid-down organizational procedures, contract/s for _____

_____

_____ (hereinafter referred to as "Contract"). The Principal values full compliance with all relevant laws of the land, rules and regulations, and the principles of economic use of resources, and of fairness and transparency in its relations with its Bidder(s)/ Contractor(s).

In order to achieve these goals, the Principal will appoint panel of Independent External Monitor(s) (IEMs), who will monitor the tender process and the execution of the contract for compliance with the principles mentioned above.

Section 1- Commitments of the Principal

1.1 The Principal commits itself to take all measures necessary to prevent corruption and to observe the following principles: -

1.1.1 No employee of the Principal, personally or through family members, will in connection with the tender for, or the execution of a contract, demand, take a promise for or accept, for self or third person, any material or immaterial benefit which the person is not legally entitled to.

1.1.2 The Principal will, during the tender process treat all Bidder(s) with equity and reason. The Principal will in particular, before and during the tender process, provide to all Bidder(s) the same information and will not provide to any Bidder(s) confidential/ additional information through which the Bidder(s) could obtain an advantage in relation to the tender process or the contract execution.

1.1.3 The Principal will exclude from the process all known prejudiced persons.

1.2 If the Principal obtains information on the conduct of any of its employees which is a penal offence under the Indian Penal Code 1860 and Prevention of Corruption Act 1988 or any other statutory penal enactment, or if there be a substantive suspicion in this regard, the Principal will inform its Vigilance Office and in addition can initiate disciplinary actions.

Section 2 - Commitments of the Bidder(s)/ Contractor(s)

2.1 The Bidder(s)/ Contractor(s) commit himself to take all measures necessary to prevent corruption. The Bidder(s)/ Contractor(s) commits himself to observe the following principles during participation in the tender process and during the contract execution.

2.1.1 The Bidder(s)/ Contractor(s) will not, directly or through any other person or firm, offer, promise or give to the Principal or to any of the Principal's employees involved in the tender process or the execution of the contract or to any third person any material, immaterial or any other benefit which he/ she is not legally entitled to, in order to obtain in exchange any advantage of any kind whatsoever during the tender process or during the execution of the contract.

2.1.2 The Bidder(s)/ Contractor(s) will not enter with other Bidder(s) into any illegal or undisclosed agreement or understanding, whether formal or informal. This applies in particular to prices, specifications, certifications, subsidiary contracts, submission or non-submission of bids or any other actions to restrict competitiveness or to introduce cartelization in the bidding process.

2.1.3 The Bidder(s)/ Contractor(s) will not commit any penal offence under the relevant Indian Penal Code (IPC) and Prevention of Corruption Act; further the Bidder(s)/ Contractor(s) will not use improperly, for purposes of competition or personal gain, or pass on to others, any information or document provided by the Principal as part of the business relationship, regarding plans, technical proposals and business details, including information contained or transmitted electronically.

2.1.4 Foreign Bidder(s)/ Contractor(s) shall disclose the name and address of agents and representatives in India and Indian Bidder(s)/ Contractor(s) to disclose their foreign principals or associates. The Bidder(s)/ Contractor(s) will, when presenting his bid, disclose any and all payments he has made, and is committed to or intends to make to agents, brokers or any other intermediaries in connection with the award of the contract.

2.2 The Bidder(s)/ Contractor(s) will not instigate third persons to commit offences outlined above or be an accessory to such offences.

2.3 The Bidder(s)/ Contractor(s) shall not approach the Courts while representing the matters to IEMs and shall await their decision in the matter.

Section 3 - Disqualification from tender process and exclusion from future contracts

If the Bidder(s)/ Contractor(s), before award or during execution has committed a transgression through a violation of Section 2 above, or acts in any other manner such as to put his reliability or credibility in question, the Principal is entitled to disqualify the Bidder(s)/ Contractor(s) from the tender process , terminate the contract, if already awarded, exclude from future business dealings and/ or take action as per the separate "Guidelines on Banning of Business dealings with Suppliers/ Contractors", framed by the Principal.

Section 4 - Compensation for Damages

4.1 If the Principal has disqualified the Bidder (s) from the tender process before award / order acceptance according to Section 3, the Principal is entitled to demand and recover the damages equivalent to Earnest Money Deposit/ Bid Security.

4.2 If the Principal is entitled to terminate the Contract according to Section 3, or terminates the Contract in application of Section 3 above , the Bidder(s)/ Cotractor (s) transgression through a violation of Section 2 above shall be construed breach of contract and the Principal shall be-entitled to demand and recover from the Contractor an amount equal to 5% of the contract value or the amount equivalent to Security Deposit/ Performance Bank Guarantee , whichever is higher, as damages, in addition to and without prejudice to its right to demand and recover compensation for any other loss or damages specified elsewhere in the contract.

Section 5 - Previous Transgression

5.1 The Bidder declares that no previous transgressions occurred in the last 3 (three) years with any other company in any country conforming to the anti-corruption approach or with any other Public Sector Enterprise in India that could justify his exclusion from the tender process.

5.2 If the Bidder makes incorrect statement on this subject, he can be disqualified from the tender process or the contract, if already awarded, can be terminated for such reason or action can be taken as per the separate "Guidelines on Banning of Business dealings with Suppliers/ Contractors", framed by the Principal.

Section 6 - Equal treatment of all Bidder (s)/ Contractor (s) / Sub-contractor (s)

6.1 The Principal will enter into Integrity Pacts with identical conditions as this Integrity Pact with all Bidders and Contractors.

6.2 In case of Sub-contracting, the Principal Contractor shall take the responsibility of the adoption of Integrity Pact by the Sub-contractor(s) and ensure that all Sub-contractors also sign the Integrity Pact.

6.3 The Principal will disqualify from the tender process all Bidders who do not sign this Integrity Pact or violate its provisions.

Section 7 - Criminal Charges against violating Bidders/ Contractors /Subcontractors

If the Principal obtains knowledge of conduct of a Bidder, Contractor or Subcontractor, or of an employee or a representative or an associate of a Bidder, Contractor or Subcontractor which constitutes corruption, or if the Principal has substantive suspicion in this regard, the Principal will inform the Vigilance Office.

Section 8 -Independent External Monitor(s)

8.1 The Principal appoints competent and credible panel of Independent External Monitor (s) (IEMs) for this Integrity Pact. The task of the IEMs is to review independently and objectively, whether and to what extent the parties comply with the obligations under this Integrity Pact.

8.2 The IEMs are not subject to instructions by the representatives of the parties and performs his functions neutrally and independently. He reports to the CMD, BHEL.

8.3 The IEMs shall be provided access to all documents/ records pertaining to the Contract, for which a complaint or issue is raised before them as and when warranted. However, the documents/records/information having National Security implications and those documents which have been classified as Secret/Top Secret are not to be disclosed.

8.4 The Principal will provide to the IEMs sufficient information about all meetings among the parties related to the Contract provided such meetings could have an impact on the contractual relations between the Principal and the Contractor. The parties offer to the IEMs the option to participate in such meetings.

8.5 The advisory role of IEMs is envisaged as that of a friend, philosopher and guide. The advice of IEMs would not be legally binding and it is restricted to resolving issues raised by a Bidder regarding any aspect of the tender which allegedly restricts competition or bias towards some Bidders. At the same time, it must be understood that IEMs are not consultants to the Management. Their role is independent in nature and the advice once tendered would not be subject to review at the request of the organization.

8.6 For ensuring the desired transparency and objectivity in dealing with the complaints arising out of any tendering process or during execution of Contract, the matter should be examined by the full panel of IEMs jointly, who would look into the records, conduct an investigation, and submit their joint recommendations to the Management.

8.7 The IEMs would examine all complaints received by them and give their recommendations/ views to the CMD, BHEL at the earliest. They may also send their report directly to the CVO, in case of suspicion of serious irregularities requiring legal/ administrative action. Only in case of very serious issue having a specific, verifiable Vigilance angle, the matter should be reported directly to the Commission. IEMs will tender their advice on the complaints within 30 days.

8.8 The CMD, BHEL shall decide the compensation to be paid to the IEMs and its terms and conditions.

8.9 IEMs should examine the process integrity, they are not expected to concern themselves with fixing of responsibility of officers. Complaints alleging mala fide on the part of any officer of the Prinicpal should be looked into by the CVO of the Principal.

8.10 If the IEMs have reported to the CMD, BHEL, a substantiated suspicion of an offence under relevant Indian Penal Code / Prevention of Corruption Act, and the CMD, BHEL has not, within reasonable time, taken visible action to proceed against such offence or reported it to the Vigilance Office, the IEMs may also transmit this information directly to the Central Vigilance Commissioner, Government of India.

8.11 After award of work, the IEMs shall look into any issue relating to execution of Contract, if specifically raised before them. As an illustrative example, if a Contractor who has been awarded the Contract, during the execution of Contract, raises issue of delayed payment etc. before the IEMs, the same shall be examined by the panel of IEMs. Issues like warranty/ guarantee etc. shall be outside the purview of IEMs.

8.12 However, the IEMs may suggest systemic improvements to the management of the Principal, if considered necessary, to bring about transparency, equity and fairness in the system of procurement.

8.13 The word `Monitor' would include both singular and plural.

Section 9 - Pact Duration

9.1 This Integrity Pact shall be operative from the date this Integrity Pact is signed by both the parties till the final completion of contract for successful Bidder, and for all other Bidders 6 months after the Contract has been awarded. Any violation of the same would entail disqualification of the bidders and exclusion from future business dealings.

9.2 If any claim is made/ lodged during currency of this Integrity Pact, the same shall be binding and continue to be valid despite the lapse of this Pact as specified above, unless it is discharged/ determined by the CMD, BHEL.

Section 10 - Other Provisions

10.1 This Integrity Pact is subject to Indian Laws and exclusive jurisdiction shall be of the competent Courts as indicated in the Tender or Contract, as the case may be.

10.2 Changes and supplements as well as termination notices need to be made in writing.

10.3 If the Bidder(s)/ Contractor(s) is a partnership or a consortium or a joint venture, this Integrity Pact shall be signed by all partners of the partnership or joint venture or all consortium members.

10.4 Should one or several provisions of this Integrity Pact turn out to be invalid, the remainder of this Integrity Pact remains valid. In this case, the parties will strive to come to an agreement to their original intentions.

10.5 Only those bidders / contractors who have entered into this Integrity Pact with the Principal would be competent to participate in the bidding. In other words, entering into this Integrity Pact would be a preliminary qualification.

10.6 In the event of any dispute between the Principal and Bidder(s)/ Contractor(s) relating to the Contract, in case, both the parties are agreeable, they may try to settle dispute through Mediation before the panel of IEMs in a time bound manner. In case, the dispute remains unresolved even after mediation by the panel of IEMs, either party may take further action as the terms & conditions of the Contract. The fees/expenses on dispute resolution through mediation shall be shared by both the parties. Further, the mediation proceedings shall be confidential in nature and the parties shall keep confidential all matters relating to the mediation proceedings including any settlement agreement arrived at between the parties as outcome of mediation. Any views expressed, suggestions, admissions or proposals etc. made by either party in the course of mediation shall not be relied upon or introduced as evidence in any further arbitral or judicial proceedings, whether or not such proceedings relate to the dispute that is the subject of mediation proceedings. Neither of the parties shall present IEMs as witness in any Alternative Dispute Resolution or judicial proceedings in respect of the dispute that was subject of mediation.

---	---
For & On behalf of the Principal (Office Seal)	For & On behalf of the Bidder/ Contractor (Office Seal)
Place _____ Date _____	
Witness:_____ (Name & Address) _____ _____	Witness:_____ (Name & Address) _____ _____

Clause on IP in the tender

Integrity Pact (IP)

(a) IP is a tool to ensure that activities and transactions between the Company and its Bidders/ Contractors are handled in a fair, transparent and corruption free manner. Following Independent External Monitors (IEMs) on the present panel have been appointed by BHEL with the approval of CVC to oversee implementation of IP in BHEL.

"In case of any complaints arising out of the tendering process, the matter may be referred to any of the below e-mail IDs.

iem1@bhel.in ; iem2@bhel.in ; iem3@bhel.in

As on date, the positions of Independent External Monitors (IEMs) are vacant in the Company. As and when the IEMs join based on due approval of the Competent Authority, any complaint(s) received will be shared with the IEMs."

(b) The IP as enclosed with the tender is to be submitted (duly signed by authorized signatory) along with techno-commercial bid (Part-I, in case of two/ three part bid). Only those bidders who have entered into such an IP with BHEL would be competent to participate in the bidding. In other words, entering into this Pact would be a preliminary qualification.

(c) Please refer Section-8 of IP for Role and Responsibilities of IEMs. In case of any complaint arising out of the tendering process, the matter may be referred to any of the above IEM(s). All correspondence with the IEMs shall be done through email only.

Note:

No routine correspondence shall be addressed to the IEM (phone/ post/ email) regarding the clarifications, time extensions or any other administrative queries, etc on the tender issued. All such clarification/ issues shall be addressed directly to the tender issuing (procurement) department's officials whose contact details are provided below:

Details of contact person(s):

(1)
Name:
Deptt:
Address:
Phone: (Landline/Mobile)
Email:
Fax:

AMIT KUMAR
Digitally signed by AMIT KUMAR
Date: 2025.08.18 15:38:21 +05'30'

(2)
Name:
Deptt:
Address:
Phone: (Landline/Mobile)
Email:
Fax:

ABHISHEK
2025.08.19 08:52:53 +05'30'

Clause on IP in the tender

Integrity Pact (IP)

(a) IP is a tool to ensure that activities and transactions between the Company and its Bidders/ Contractors are handled in a fair, transparent and corruption free manner. Following Independent External Monitors (IEMs) on the present panel have been appointed by BHEL with the approval of CVC to oversee implementation of IP in BHEL.

Sl	**IEM**	**Email**
1.	Dr. Sarat Kumar Acharya, Ex-CMD, NLC	iem1@bhel.in
2.	Shri R. Mukundan, IRPS (Retd.)	iem2@bhel.in
3.	Shri Madan Lal Meena, IAS (Retd.)	iem3@bhel.in

(b) The IP as enclosed with the tender is to be submitted (duly signed by authorized signatory) along with techno-commercial bid (Part-I, in case of two/ three part bid). Only those bidders who have entered into such an IP with BHEL would be competent to participate in the bidding. In other words, entering into this Pact would be a preliminary qualification.

(c) Please refer Section-8 of IP for Role and Responsibilities of IEMs. In case of any complaint arising out of the tendering process, the matter may be referred to any of the above IEM(s). All correspondence with the IEMs shall be done through email only.

Note:

No routine correspondence shall be addressed to the IEM (phone/ post/ email) regarding the clarifications, time extensions or any other administrative queries, etc on the tender issued. All such clarification/ issues shall be addressed directly to the tender issuing (procurement) department's officials whose contact details are provided below:

Details of contact person(s):

(1)
Name:_____
Deptt: _____
Address: _____
Phone: (Landline/ Mobile)
_____
Email: _____
Fax: _____

(2)
Name:_____
Deptt: _____
Address: _____
Phone: (Landline/ Mobile)
_____
Email: _____
Fax: _____

Sl. No.	Name of the bank
1	State Bank of India
2	Canara Bank
3	IDBI Bank Limited
4	ICICI Bank Limited
5	HDFC Bank Limited
6	Axis Bank
7	IndusInd Bank Limited
8	Bank of Baroda
9	Exim Bank
10	Indian Bank
11	Punjab National Bank
12	Union Bank of India
13	Yes Bank Limited
14	RBL Bank Ltd.
15	Standard Chartered Bank
16	Indian Overseas Bank
17	Kotak Mahindra Bank Limited
18	Federal Bank Limited
19	Hongkong and Shanghai Banking Corporation Ltd

ANNEXURE D

BANK GUARANTEE FOR PERFORMANCE SECURITY

Bank Guarantee No:

Date:

To

NAME

& ADDRESSES OF THE BENEFICIARY

Dear Sirs,

In consideration of Bharat Heavy Electricals Limited (hereinafter referred to as the 'Employer' which expression shall unless repugnant to the context or meaning thereof, include its successors and permitted assigns) incorporated under the Companies Act, 1956 and having its registered office at _____[1] through its Unit at……..(name of the Unit) having awarded to (Name of the Vendor / Contractor / Supplier) with its registered office at_____[2] hereinafter referred to as the ' Vendor / Contractor / Supplier ', which expression shall unless repugnant to the context or meaning thereof, include its successors and permitted assigns), a contract Ref No……dated ……..[3] valued at Rs……[4] (Rupees ----------)/FC……(in words……..) for ……[5] (hereinafter called the 'Contract') and the Vendor / Contractor / Supplier having agreed to provide a Contract Performance Bank Guarantee, equivalent to ……% (…. Percent) of the said value of the Contract to the Employer for the faithful performance of the Contract,

we, ……, (hereinafter referred to as the Bank), having registered/Head office at …….. and inter alia a branch at …… being the Guarantor under this Guarantee, hereby, irrevocably and unconditionally undertake to forthwith and immediately pay to the Employer any sum or sums upto a maximum amount of Rs ---------- [6] (Rupees ----------) without any demur, immediately on first demand from the Employer and without any reservation, protest, and recourse and without the Employer needing to prove or demonstrate reasons for its such demand.

Any such demand made on the Bank shall be conclusive as regards the amount due and payable by the Bank under this guarantee. However, our liability under this guarantee shall be restricted to an amount not exceeding Rs. _____.

We undertake to pay to the Employer any money so demanded notwithstanding any dispute or disputes raised by the Vendor / Contractor / Supplier in any suit or proceeding pending before any Court or Tribunal, Arbitrator or any other authority, our liability under this present being absolute and unequivocal.

The payment so made by us under this Guarantee shall be a valid discharge of our liability for payment thereunder and the Vendor / Contractor / Supplier shall have no claim against us for making such payment.

We the ……bank further agree that the guarantee herein contained shall remain in full force and effect during the period that would be taken for the performance of the said Contract/satisfactory completion of the performance guarantee period as per the terms of the Contract and that it shall continue to be enforceable till

all the dues of the Employer under or by virtue of the said Contract have been fully paid and its claims satisfied or discharged.

We ……..BANK further agree with the Employer that the Employer shall have the fullest liberty without our consent and without affecting in any manner our obligations hereunder to vary any of the terms and conditions of the said Contract or to extend time of performance by the said Vendor / Contractor / Supplier from time to time or to postpone for any time or from time to time any of the powers exercisable by the Employer against the said Vendor / Contractor / Supplier and to forbear or enforce any of the terms and conditions relating to the said Contract and we shall not be relieved from our liability by reason of any such variation, or extension being granted to the said Vendor / Contractor / Supplier or for any forbearance, act or omission on the part of the Employer or any indulgence by the Employer to the said Vendor / Contractor / Supplier or by any such matter or thing whatsoever which under the law relating to sureties would but for this provision have effect of so relieving us.

The Bank also agrees that the Employer at its option shall be entitled to enforce this Guarantee against the Bank as a principal debtor, in the first instance without proceeding against the Vendor / Contractor / Supplier and notwithstanding any security or other guarantee that the Employer may have in relation to the Vendor / Contractor / Supplier 's liabilities.

This Guarantee shall remain in force upto and including…….. [7] and shall be extended from time to time for such period as may be desired by Employer.

This Guarantee shall not be determined or affected by liquidation or winding up, dissolution or change of constitution or insolvency of the Vendor / Contractor / Supplier but shall in all respects and for all purposes be binding and operative until payment of all money payable to the Employer in terms thereof.

Unless a demand or claim under this guarantee is made on us in writing on or before the ……..[8]we shall be discharged from all liabilities under this guarantee thereafter.

We, …… BANK lastly undertake not to revoke this guarantee during its currency except with the previous consent of the Employer in writing.

Notwithstanding anything to the contrary contained hereinabove:

a) The liability of the Bank under this Guarantee shall not exceed…… [6]
b) This Guarantee shall be valid up to ……[7]
c) Unless the Bank is served a written claim or demand on or before _____[8] all rights under this guarantee shall be forfeited and the Bank shall be relieved and discharged from all liabilities under this guarantee irrespective of whether or not the original bank guarantee is returned to the Bank.

We, _____ Bank, have power to issue this Guarantee under law and the undersigned as a duly authorized person has full powers to sign this Guarantee on behalf of the Bank.

For and on behalf of
(Name of the Bank)

Dated…….

Place of Issue……..

[1] NAME AND ADDRESS OF EMPLOYER I.e Bharat Heavy Electricals Limited

[2] NAME AND ADDRESS OF THE VENDOR /CONTRACTOR / SUPPLIER.

[3] DETAILS ABOUT THE NOTICE OF AWARD/CONTRACT REFERENCE

[4] CONTRACT VALUE

[5] PROJECT/SUPPLY DETAILS
[6] BG AMOUNT IN FIGURES AND WORDS

[7] VALIDITY DATE

[8] DATE OF EXPIRY OF CLAIM PERIOD

Note:

1. Units are advised that expiry of claim period may be kept 3-6 months after validity date. It may be ensured that the same is in line with the agreement/ contract entered with the Vendor.

2. The BG should be on Non-Judicial Stamp paper/e-stamp paper of appropriate value as per Stamp Act prevailing in the State(s) where the BG is submitted or is to be acted upon or the rate prevailing in the State where the BG was executed, whichever is higher. The Stamp Paper/e-stamp paper shall be purchased in the name of Vendor/Contractor/Supplier /Bank issuing the guarantee.

3. In line with the GCC, SCC or contractual terms, Unit may carry out minor modifications in the Standard BG Formats. If required, such modifications may be carried out after taking up appropriately with the Unit/Region's Law Deptt.

4. **In Case of Bank Guarantees submitted by Foreign Vendors-**

   a. **From Nationalized/Public Sector / Private Sector/ Foreign Banks (BG issued by Branches in India)** can be accepted subject to the condition that the Bank Guarantee should be enforceable in the town/city or at nearest branch where the Unit is located i.e. Demand can be presented at the Branch located in the town/city or at nearest branch where the Unit is located.

   b. **From Foreign Banks (wherein Foreign Vendors intend to provide BG from local branch of the Vendor country's Bank)**

      b.1 In such cases, in the Tender Enquiry/ Contract itself, it may be clearly specified that Bank Guarantee issued by **any of the Consortium Banks only** will be accepted by BHEL. As such, Foreign Vendor needs to make necessary arrangements for issuance of Counter- Guarantee by Foreign Bank in favour of the Indian Bank's (BHEL's Consortium Bank) branch in India. It is advisable that all charges for issuance of Bank Guarantee/ counter- Guarantee should be borne by the Foreign Vendor. The tender stipulation should clearly specify these requirements.

      b.2 **In case, Foreign Vendors intend to provide BG from** Overseas Branch of our Consortium Bank (e.g. if a BG is to be issued by SBI Frankfurt), the same is acceptable. However, the procedure at **sl.no. b.1** will required to be followed.

      b.3 The BG issued may preferably be subject to Uniform Rules for Demand Guarantees (URDG) 758 (as amended from time to time). The BG Format provided to them should clearly specify the same.

On Bidder's office letter pad

Make in India (Model Certificate) Annexure-I

Self-Declaration

Enquiry No.	
Enquiry Date	

In line with Government public procurement order Number P-45021/2/2017-B.E-II dated 15.06.2017, and further modified order dt. 28.05.2018, 29.05-2019, 04.06.2020 and 19.07.2024.

I / We hereby declare that I / We are a "Local Supplier" meeting the requirement of minimum local content (…….%) defined in the above government notification for the goods against above mentioned enquiry Number.

Details of location at which local value addition will be made is as follows:

Door No.	
Street / Address 1	
Street / Address 2	
District	
State	
Country	
PIN Code	

We also understand that the false declarations will be considered as breach of Integrity and liable for action.

For Company Name:
Seal:

Signature:

Date:
Place :

(Please fill all Yellow color field)

Annexure – MSEs 2012 Rev 01

OWNERSHIP STATUS (SC/ ST OR WOMEN-OWNED OR OTHERS) UNDER MSE
(Mandatory for all Non-GeM tenders and custom bids on GeM)

In order to avail benefits of MSE under various categories, all Bidders falling under MSE category shall furnish the following details & submit documentary evidence/ Govt. Certificate etc. in support of the same along with their techno-commercial offer.

Type under MSE	SC/ST Owned	Women Owned	Others (excluding SC/ST & Women Owned)
Micro			
Small			

(Bidder details with Sign and date)

Note: In case party is falling under any of the above category, they shall mention **YES** in the against the box.

Enq.No.
Vendor Name
Quotation No.
Quotation Date

TECHNICAL CONDITION

Sl.No.	Description	Vendor Response	Comment
1	Technical condition as per NIT		
2	Acceptance of items and their quantity as per NIT		
3	Quoted for all the items of NIT		
4	Delivery Period as per NIT		
5	Submission of Guarantee/Warranty certificate as per NIT		
6	Submission of Test Certificate as per NIT		
7	Submission of Inspection Certificate as per NIT		
8	Acceptance of packing instruction/condition as per NIT		

COMMERCIAL CONDITION

Sl.No.	Description	Vendor Response	Comment
1	Delivery Term		
	(*Insurance will be in vendor scope if delivery term is accepted as BHEL Store*)		
2	MSE Status		
3	Payment Term		
4	Validity of offer as per NIT		
5	GST Type		
6	LD Clause as per GTC		
7	Risk purchase as per NIT		
8	Firm Price : The quoted/finalized rates shall be firm till execution of supplies.		
	Offer with PVC (Price Variation Clause) will not be considered.		
9	Submission of Bank Guarantee		
10	Acceptance of Reverse Auction clause of NIT		
11	I have read & understood all terms and conditions of GTC and hereby give my acceptance on the same		

NOTE **Vendors have to write in "Comment" box only if their response is not available in drop down menu.**