FIRST ANGLE PROJECTION

(ALL DIMENSIONS ARE IN mm)

DRG. NO. 0 212 02 21602

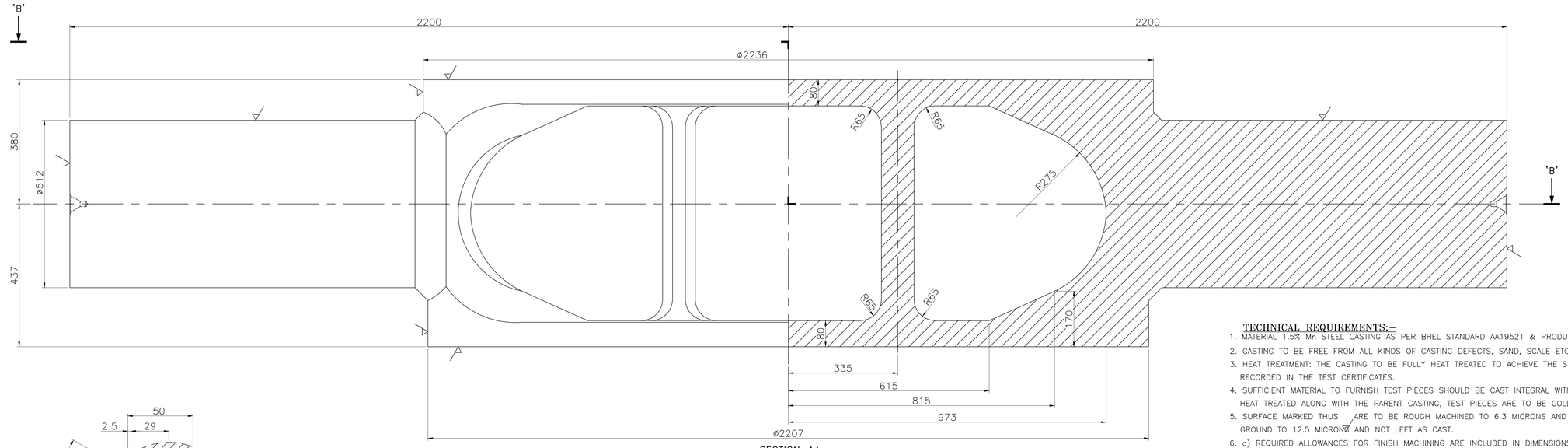

SECTION–AA

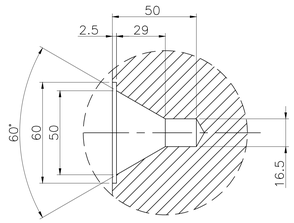

DETAIL–P
SCALE 1:1

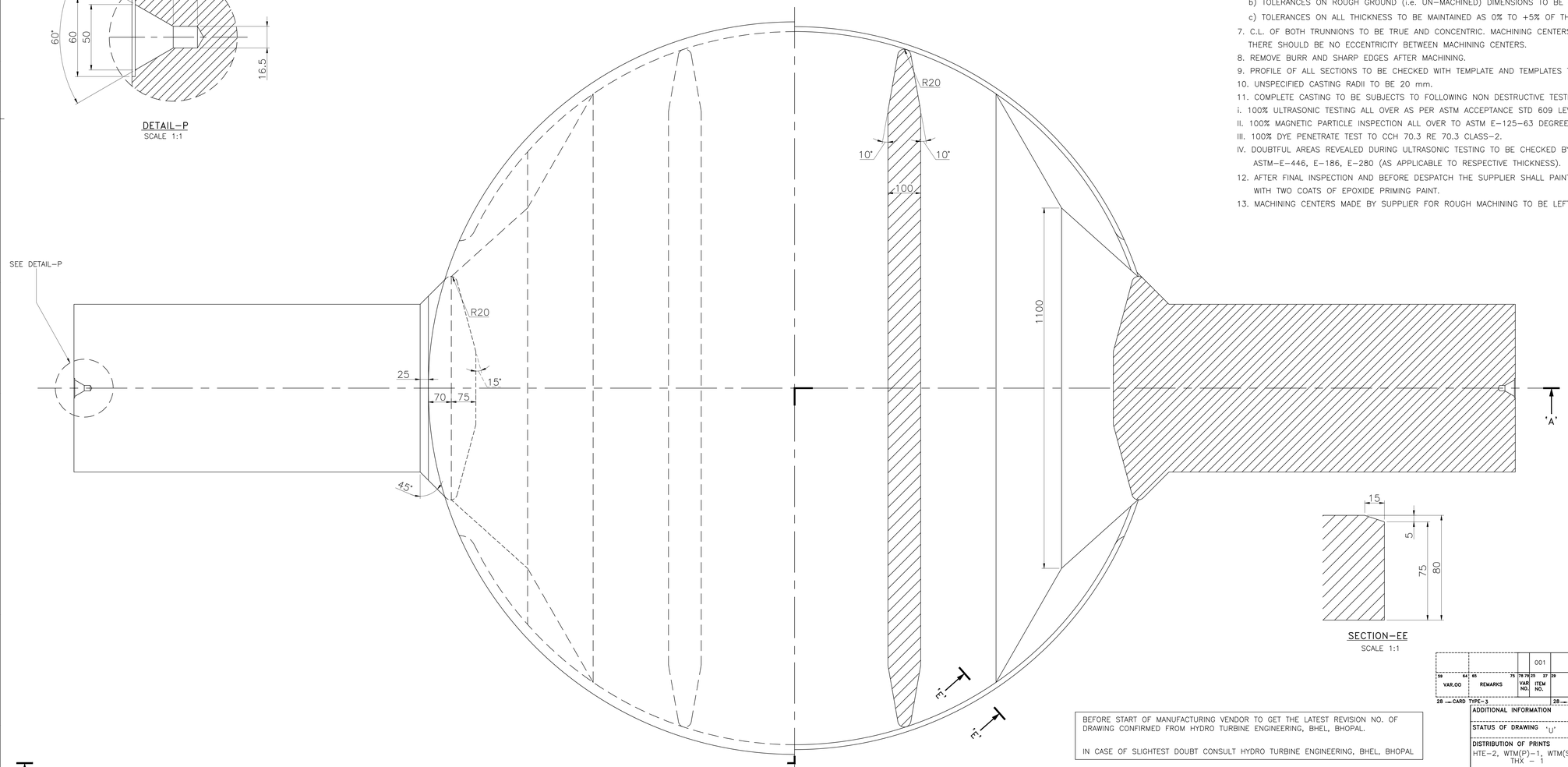

SECTION–BB

SECTION–EE
SCALE 1:1

TECHNICAL REQUIREMENTS:–

1. MATERIAL 1.5% Mn STEEL CASTING AS PER BHEL STANDARD AA19521 & PRODUCT STANDARD HT 00215(REV.04).
2. CASTING TO BE FREE FROM ALL KINDS OF CASTING DEFECTS, SAND, SCALE ETC.
3. HEAT TREATMENT: THE CASTING TO BE FULLY HEAT TREATED TO ACHIEVE THE SPECIFIED PROPERTIES AND DETAILS TO BE RECORDED IN THE TEST CERTIFICATES.
4. SUFFICIENT MATERIAL TO FURNISH TEST PIECES SHOULD BE CAST INTEGRAL WITH CASTING AT SUITABLE PLACES AND TO BE HEAT TREATED ALONG WITH THE PARENT CASTING, TEST PIECES ARE TO BE COLD SAWN IN PRESENCE OF OUR INSPECTOR.
5. SURFACE MARKED THUS ARE TO BE ROUGH MACHINED TO 6.3 MICRONS AND REST OF THE SURFACES ARE TO BE GROUND TO 12.5 MICRONS AND NOT LEFT AS CAST.
6. a) REQUIRED ALLOWANCES FOR FINISH MACHINING ARE INCLUDED IN DIMENSIONS SHOWN ON DRG. AS SUCH NO FURTHER ALLOWANCES ON THESE DIMENSIONS ARE TO BE PROVIDED BY THE SUPPLIER.
   b) TOLERANCES ON ROUGH GROUND (i.e. UN–MACHINED) DIMENSIONS TO BE AS PER TABLE–1 (ZONE G–15).
   c) TOLERANCES ON ALL THICKNESS TO BE MAINTAINED AS 0% TO +5% OF THE RESPECTIVE THICKNESS.
7. C.L. OF BOTH TRUNNIONS TO BE TRUE AND CONCENTRIC. MACHINING CENTERS ARE TO BE PROVIDED ON BOTH TRUNNIONS. THERE SHOULD BE NO ECCENTRICITY BETWEEN MACHINING CENTERS.
8. REMOVE BURR AND SHARP EDGES AFTER MACHINING.
9. PROFILE OF ALL SECTIONS TO BE CHECKED WITH TEMPLATE AND TEMPLATES TO BE SUPPLIED ALONG WITH CASTING.
10. UNSPECIFIED CASTING RADII TO BE 20 mm.
11. COMPLETE CASTING TO BE SUBJECTS TO FOLLOWING NON DESTRUCTIVE TESTING WITHIN SPECIFIED ACCEPTANCE STANDARDS.
    i. 100% ULTRASONIC TESTING ALL OVER AS PER ASTM ACCEPTANCE STD 609 LEVEL–3
    II. 100% MAGNETIC PARTICLE INSPECTION ALL OVER TO ASTM E–125–63 DEGREE–2.
    III. 100% DYE PENETRATE TEST TO CCH 70.3 RE 70.3 CLASS–2.
    IV. DOUBTFUL AREAS REVEALED DURING ULTRASONIC TESTING TO BE CHECKED BY RADIOGRAPHIC TESTING TO ASTM–E–446, E–186, E–280 (AS APPLICABLE TO RESPECTIVE THICKNESS).
12. AFTER FINAL INSPECTION AND BEFORE DESPATCH THE SUPPLIER SHALL PAINT THE CASTING WITH TWO COATS OF EPOXIDE PRIMING PAINT.
13. MACHINING CENTERS MADE BY SUPPLIER FOR ROUGH MACHINING TO BE LEFT TO FACILITATE FINAL MACHINING.

TABLE–1

CAST UNTOLERANCED DIMENSION (SEE T.R.6)	LIMITS ON CAST UNTOLERANCED DIMENSION
0 TO 500	±2.5
500 TO 1200	±4
1200 TO 2000	±5.5
2000 AND ABOVE	±7.5

BEFORE START OF MANUFACTURING VENDOR TO GET THE LATEST REVISION NO. OF DRAWING CONFIRMED FROM HYDRO TURBINE ENGINEERING, BHEL, BHOPAL.

IN CASE OF SLIGHTEST DOUBT CONSULT HYDRO TURBINE ENGINEERING, BHEL, BHOPAL

								001	BF VALVE DOOR (CASTING)																
																								SEE T.R. 1	
56	64	65	75	76 78	25	27	29	58	59	60	77	26	31	34	45	55	56	57	58	65	72			12,540.0	
VAR.OO		REMARKS		VAR NO.	ITEM NO.		DESCRIPTION		STD.		DRAWING NO.		IT.NO.	MATL. CODE			A/C	UNIT	UNIT WT.		CD	ZONE		001	
													32	38	46	54			68	QTY.	77				
													VAR.	MATL. SPCN.											

28 — CARD TYPE–3 28 — CARD TYPE–1 28 — CARD TYPE–2

ADDITIONAL INFORMATION

STATUS OF DRAWING 'U'

DISTRIBUTION OF PRINTS
HTE–2, WTM(P)–1, WTM(S)–4
THX – 1

TYPE OF PRODUCT OR NAME OF CUSTOMER/PROJECT: KALESHWARAM LINK-IV PACKAGE-2 (6x125 MW)

BHARAT HEAVY ELECTRICALS LTD. BHOPAL

	NAME	SIGN	DATE
DRN	RAMESH		01.06.2021
CKD	ND		01.06.2021
APPD	SK		01.06.2021

NO. OF VAR.

DEPT.	UNTOL. DIMS. GR.	SCALE	WEIGHT(K.G.)	REF.TO ASSY.DRG.	ITEM NO.	NO.OF ITEM
H.T.E. CODE 402	320000049014	1:4	12,540	-	–	001

TITLE: BF VALVE DOOR (CASTING)

DRAWING NO. 0 212 02 21602 REV. 00

SHT. NO. 1 NO. OF SHT. 1

REV.	DATE	ALTERED / CHECKED / APPD.	ZONE

A0 SIZE

THE INFORMATION ON THIS DOCUMENT IS THE PROPERTY OF BHARAT HEAVY ELECTRICALS LIMITED. IT MUST NOT BE USED DIRECTLY OR INDIRECTLY IN ANY WAY DETRIMENTAL TO THE INTEREST OF THE COMPANY.

INVENTORY NO. | SIGN. & DATE | REF. DRG. NO. 02120293002