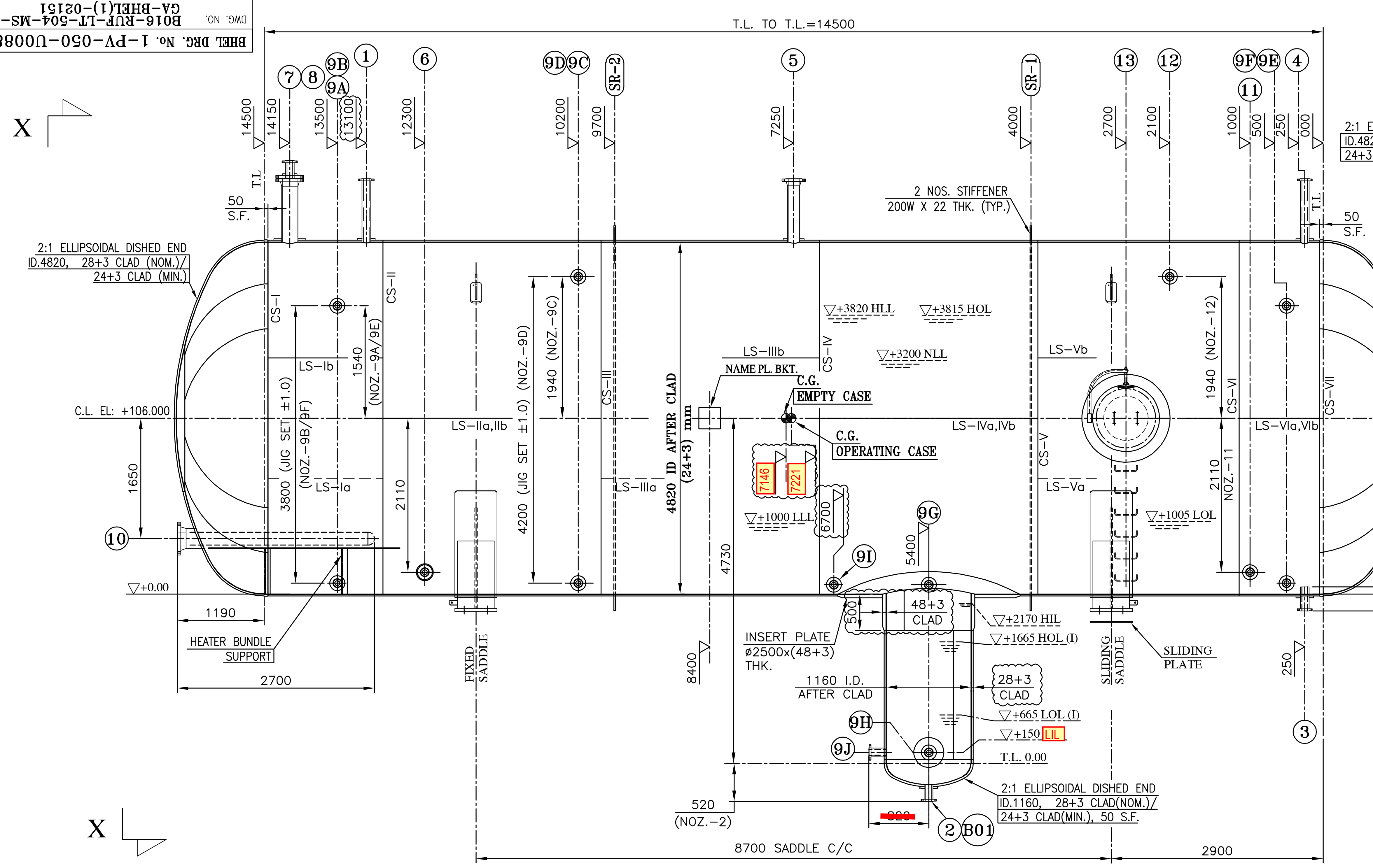

ELEVATION

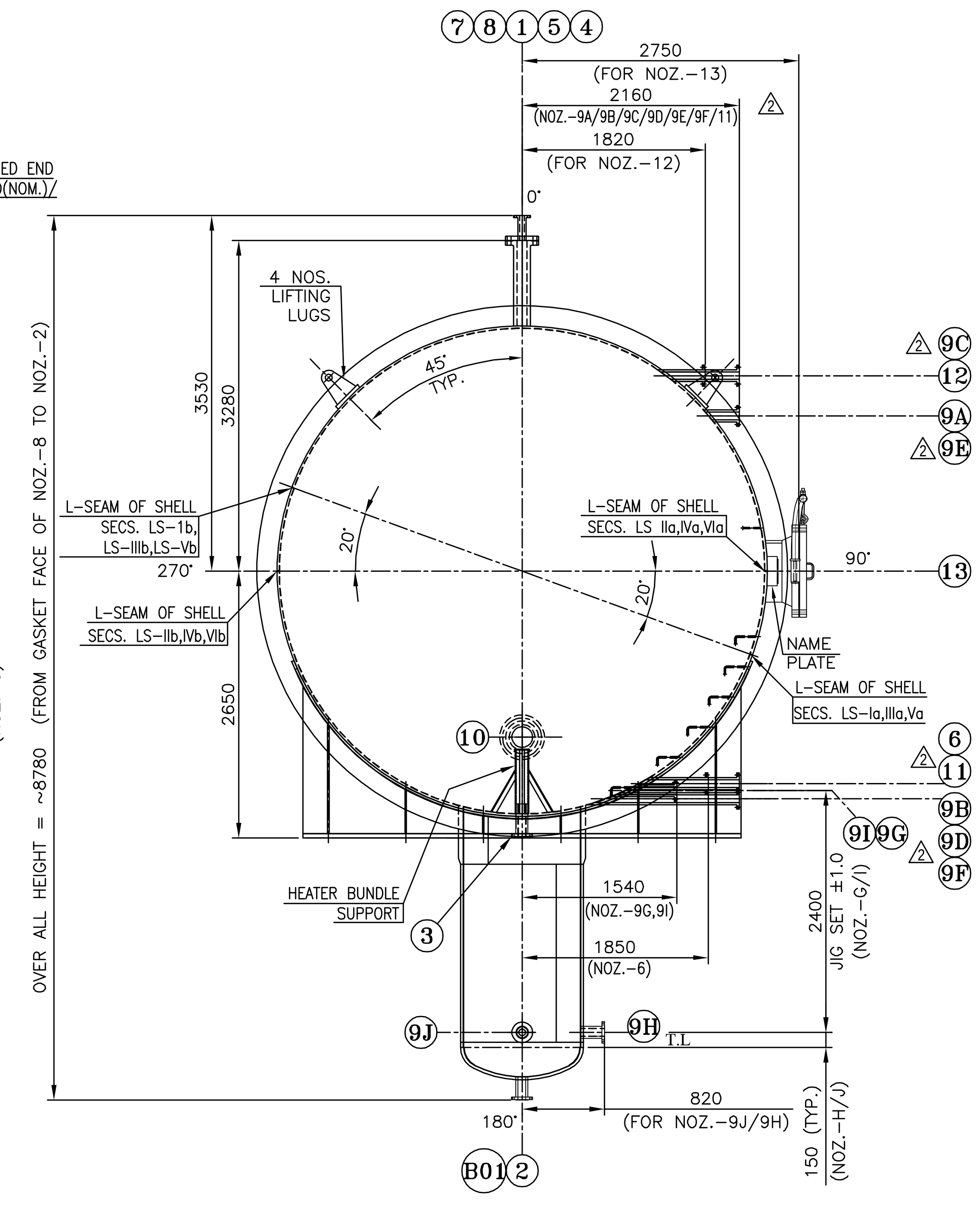

VIEW FROM 'X-X'

NORTH

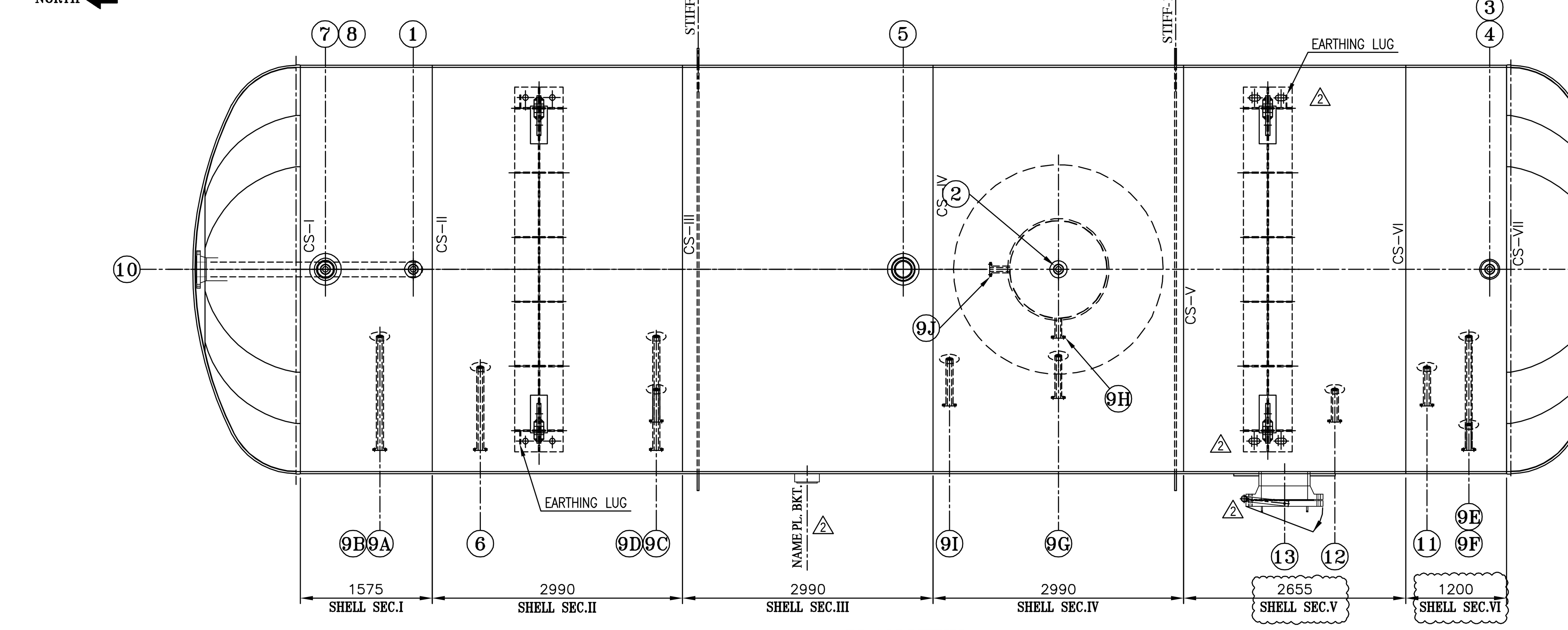

PLAN VIEW

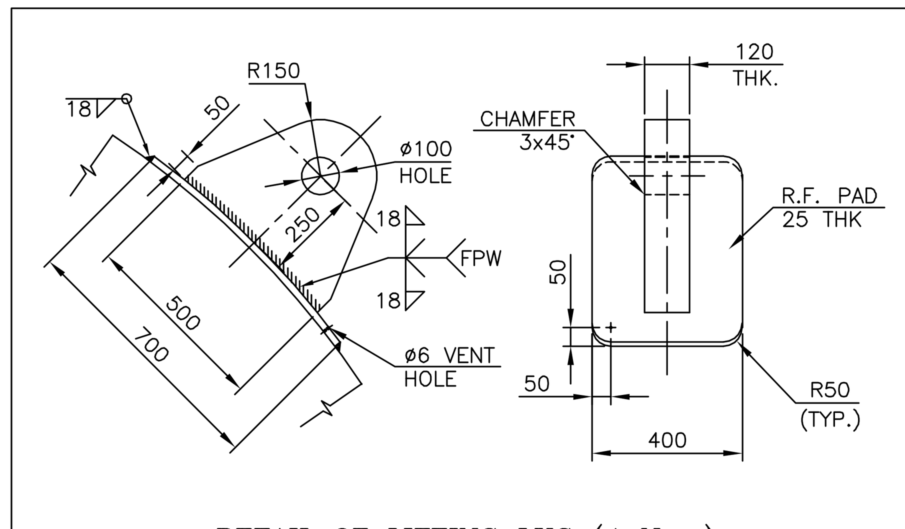

DETAIL OF LIFTING LUG (4 Nos.)

DESIGN DATA

SERVICE	SEAL OIL RESERVIOR		
DESIGN PRESSURE (INTERNAL / EXTERNAL) MPa (kg/cm2) (g)	1.03 (10.5)	0.1(F.V (1.055)) (HIGHEST POINT)	
MAXIMUM ALLOWABLE WORKING PRESSURE MPa (kg/cm2) (g)	1.03 (10.5)		
MAXIMUM ALLOWABLE PRESSURE MPa (kg/cm2) (g)	1.363 (13.9)		
MAXIMUM ALLOWABLE EXTERNAL WORKING PRESSURE MPa (kg/cm2) (g)	0.188 (1.92)		
DESIGN TEMPERATURE (INTERNAL / EXTERNAL) (°C)	260 / 260		
OPERATING PRESSURE MPa (kg/cm2) (g)	0.101 (1.03)		
OPERATING TEMPERATURE (°C)	80	COINCIDENT MAXIMUM PRESSURE: 1.03 (10.5) MPa (kg/cm2)(g)	
STEAM OUT CONDITON MPa (kg/cm2) (g)	0.049 (0.5) @ 170 °C	LOWEST ALLOWABLE MDMT (°C) = -43	MACA: 0 mm
HYD.TEST PRESSURE MPa (kg/cm2) (g) AS PER UG 99(c) AT SHOP	1.72 (17.59)		
HYD.TEST PRESSURE MPa (kg/cm2) (g) AS PER UG 99(b) AT SITE	1.33 (13.65)		
CORROSION ALLOWANCE mm:	REFER TABLE-2		
CAPACITY (m3)	296.59	CLAD/WOL (UNDILUTED) (mm)	3/3 SS304L
RADIOGRAPHY:	SHELL: 100%	HEAD: 100%	
JOINT EFFICIENCY	SHELL: 1.0	HEAD: 1.0	
IMPACT TESTING = EXEMPTED (AS PER UCS-66(c), & NOTE (4) OF FIG. UCS-66)		EMPTY WEIGHT (Kg.): ~80300	
OTHER LOADINGS: YES AS PER UG-22(a), (b), (c), (d), (2), (f), (j)		FABRICATED WEIGHT (Kg.): ~73300	
INSULATION (BY LTHE), THK. (MM) (TYPE)	25 (HOT)	OPERATION WEIGHT (Kg.): ~334900	
FIRE PROOFING (BY LTHE)	NIL	TEST WEIGHT (Kg.): ~372800	
DENSITY OF FLUID: Kg./m3 (OIL/WATER)	861/1000	SPECIAL SERVICE: NO	
POST WELD HEAT TREATMENT (AS PER UW-2,UCS-56,UCS-68)	YES, (TABLE-1)	CYCLIC SERVICE: NO	
MDMT @ MAWP (°C @ kg/cm2 (g))	12.5 @ 10.5	MANUFACTURER SL. NO: 26662	
CODE STAMP REQUIRED	☒ YES ☐ NO	CONSIGNMENT SIZE: ODC/~~ORDINARY~~	
NB CODE STAMP REQUIRED	☐ YES ☒ NO	POSITION OF VESSEL: HORIZONTAL	
ASME CERTIFICATION MARK: YES WITH "U" DESIGNATOR		HYDROTEST POSITION: HORIZONTAL IN SHOP	
CODE: ASME SEC.VIII DIV.1: ED-2019	INSPECTION: M/s. TUV (TPIA) , M/s BV (AIA)		
NOZZLE LOAD DATA	APPLICABLE	STAGE WISE & THIRD PARTY INSPCTION:	YES
NATIONAL BOARD REGISTRATION	NOT REQUIRED		
WIND CODE: IS: 875, PART-3: 2015; WIND ZONE-6; RISK FACTOR-1; BASIC WIND SPEED=52 m/sec; TERRAIN CATEGORY-3, TOPOGRAPHY FACTOR-1			
SEISMIC CODE: IS 1893 (PART-4):2015 ED; SEISMIC ZONE=III; IMPORTANCE FACTOR=2; EQUIPMENT CATEGORY=1 & SITE SPECIFIC SEISMIC SPECTRA			
POST FORMING HEAT TREATMENT	NOT REQUIRED AS PER 4.31 (C) OF 6-12-0002		
LOCATION OF INSTALLATION	M/s. HPCL – VISAKHAPATNAM-A.P., INDIA		

APPLICABLE STANDARDS:

1. ASME BOILER & PRESSURE VESSEL CODE SEC VIII DIV 1 : ED-2019
2. ASME BOILER & PRESSURE VESSEL CODE SEC II PART A, C & D : ED-2019
3. ASME BOILER & PRESSURE VESSEL CODE SEC V : ED-2019
4. ASME BOILER & PRESSURE VESSEL CODE SEC IX ED-2019
5. ASME B16.5 ED-2013-STANDARD FOR PIPE FLANGES AND FLANGED FITTINGS.
6. ASME B16.11 ED-2016 FORGED STEEL FITTINGS, SOCKET WELDED & THREADED
7. ASME B36.10M ED-2018 WELDED AND SEAMLESS WROUGHT STEEL PIPE
8. ASME B1.20.1 ED2013 PIPE THREADS, GENERAL PURPOSE (INCH)

TABLE-2

CORROSION ALLOWANCE:
1) SHELL / HEAD (INTERNAL/EXTERNAL) = 3MM OF 304L CLAD / 1.5MM AS PER PROJECT SPECIFICATION.
2) NOZZLES (INTERNAL/EXTERNAL) = 3MM OF 304L CLAD & 3MM OF 304L WOL. / 1.5MM AS PER PROJECT SPECIFICATION.
3) INTERNAL (PERMANENT/REMOVABLE) = 3MM
4) SADDLE SUPPORT = 0MM

FOR GENERAL NOTES & OTHER APPLICABLE STD. PLEASE REFER DRG. NO: 3-PV-050-U0149/ B016-RUF-LT-504-MS-FD-BHEL(1)-02159

REFERENCE DOCUMENT LIST

BHEL DRAWING NO.	CLIENT DOCUMENT NO.	DRAWING TITLE	* REV.
4-PV-050-U0052	B016-RUF-LT-504-MS-LS-BHEL(1)-03016	SCHEDULE OF MANDATORY SPARES & COMMISSIONING SPARES (504-V-122)	--
PPPV-2438-PV-050-001	B016-RUF-LT-504-MS-CL-BHEL(1)-02151	MECHANICAL DESIGN OF SEAL OIL RESERVOIR(504-V-122)	--
2-PV-050-U0035	B016-RUF-LT-504-MS-FD-BHEL(1)-02160	TRANSPORTATION ARRANGEMENT FOR SEAL OIL RESERVOIR(504-V-122)	--
3-PV-050-U0149	B016-RUF-LT-504-MS-FD-BHEL(1)-02159	GENERAL NOTES FOR SEAL OIL RESERVOIR(504-V-122)	--
3-PV-050-U0148	B016-RUF-LT-504-MS-FD-BHEL(1)-02158	NAME PLATE DETAILS FOR SEAL OIL RESERVOIR(504-V-122)	--
3-PV-050-U0147	B016-RUF-LT-504-MS-FD-BHEL(1)-02157	FOUNDATION TEMPLATE FOR SEAL OIL RESERVOIR(504-V-122)	--
3-PV-050-U0146	B016-RUF-LT-504-MS-FD-BHEL(1)-02156	DETAILS OF MANWAY DAVIT FOR SEAL OIL RESERVOIR(504-V-122)	--
0-PV-050-U0011	B016-RUF-LT-504-MS-FD-BHEL(1)-02155	SHELL DEVELOPMENT OF SEAL OIL RESERVOIR(504-V-122)	--
1-PV-050-U0091	B016-RUF-LT-504-MS-FD-BHEL(1)-02154	INSULATION SUPPORT DETAILS FOR SEAL OIL RESERVOIR(504-V-122)	--
1-PV-050-U0090	B016-RUF-LT-504-MS-FD-BHEL(1)-02153	EXTERNAL ATTACHMENTS OF SEAL OIL RESERVOIR(504-V-122)	--
1-PV-050-U0089	B016-RUF-LT-504-MS-FD-BHEL(1)-02152	ASSEMBLY DETAILS OF SEAL OIL RESERVOIR(504-V-122)	--

* LATEST REVISION NO. TO BE UPDATED IN ASBUILT DRAWING

HEAT TREATMENT CYCLE TABLE-1

Part	Procedure	Loading Temperature (°C)	Holding Temperature (°C)	Heating Rate (°C/hr)	Holding Time (min.)	Cooling Rate °C/hr	Remarks
COMPLETE VESSEL INCL. BLD.FLG. ASSLY. FOR NOZL.-7,8	PWHT	<425	630±10	110	120	140	Unlaoding at 425°C

ASME CERTIFICATION MARK WITH U-DESIGNATOR

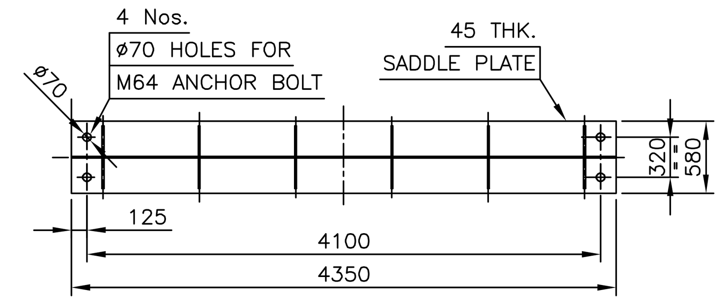

BASE PLATE FOR FIXED SADDLE

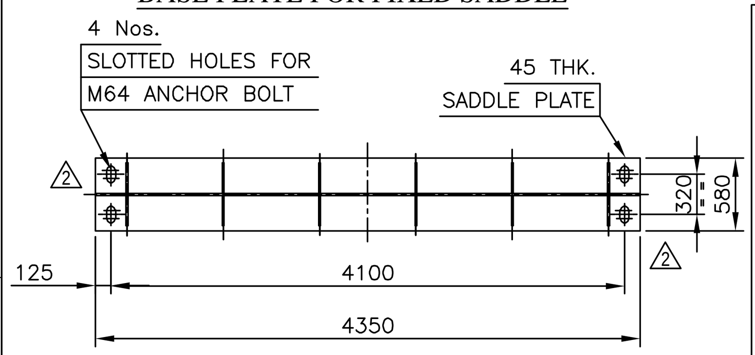

BASE PLATE FOR SLIDING SADDLE

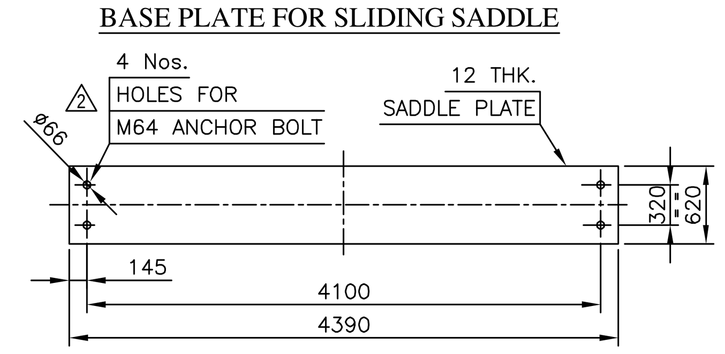

DETAIL OF SLIDING PLATE

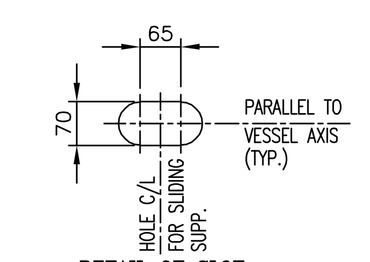

DETAIL OF SLOT

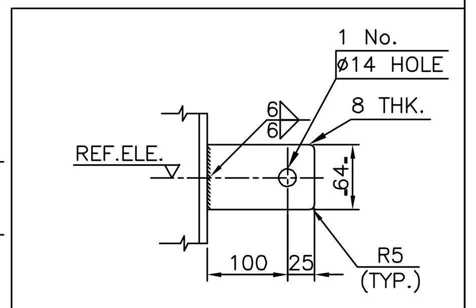

DETAIL OF EARTHING LUG (QTY. 2 Nos.)

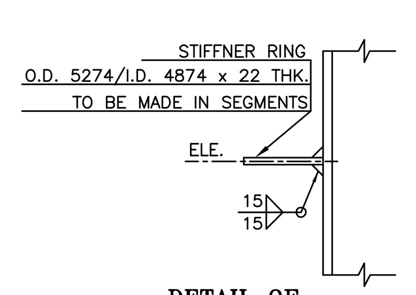

DETAIL OF STIFFENER RINGS

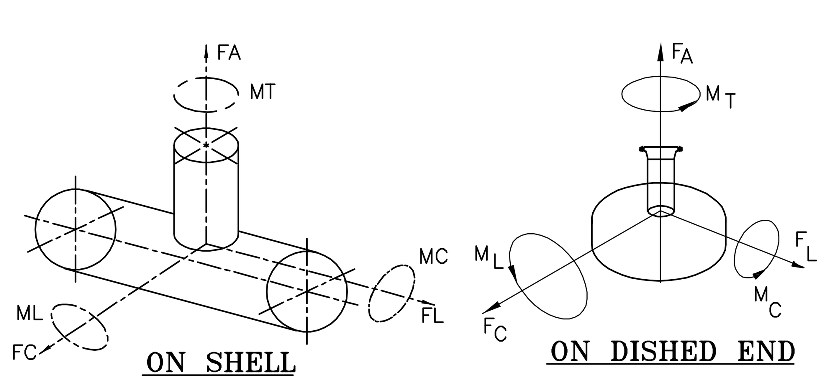

Nozzle Mark	NB	FA (kgf)	FL (kgf)	FC (kgf)	MT (kgf-m)	ML (kgf-m)	MC (kgf-m)
10	10"	1000	1000	1000	1250	1000	750
6	3"	300	300	300	112	90	67
5	8"	2000	800	800	800	640	480
4	3"	300	300	300	112	90	67
3	3"	300	300	300	112	90	67
2	3"	300	300	300	112	90	67
1	3"	300	300	300	112	90	67

Max. Nozzle Load

WELD JOINT TOLERANCES

TABLE – 1

Sl.No.	TOLERANCE APPLICABLE	TOLERANCE
01.	BEVEL ANGLE / INCLUDING ANGLE	
	a). > 35°	± 5°
	b). 20° – 35°	± 2°
	c). < 20°	± 1°
02.	ROOT GAP	
	a). ≤ 3	± 1
	b). 1 < ROOT GAP < 3	± 0.5
	c). ≤ 1	+0.5 −0.0

LOAD DATA

	EMPTY	IN OPERATION
SHEAR AT BASE (KG)		
DUE TO SEISMIC	–	50100(DBE)/65100(MCE)
DUE TO WIND	–	11100
MOMENT AT BASE (KG-M)		
DUE TO SEISMIC	–	132800(DBE)/ 172600(MCE)
DUE TO WIND	–	29500

LIST OF PARTS

SL.NO.	DESCRIPTION	MATERIAL REFERENCE	MATERIAL SPECFICATION
01	SHELL, D'END,BOOT SHELL,BOOT HEAD	CLAD PLATE	SA516GR.70 + SS304L CLAD
02	NOZZLE NECK ABOVE 6" – NOZL.13	FAB. NOZZLE (CLAD PLATE))	SA516GR.70 + SS304L CLAD
03	NOZZLE NECKS ≤ 6" – NOZL. 5,7,10	PIPE + WOL	SA106 GR.B + SS 304L WOL
04	NOZZLE FORGED LWN- NOZL. 1-3,4,6,8,9,11,12	FORGED CARBON STEEL + WOL	SA105 + SS 304L WOL
05	NOZZLE FLANGES	FORGED CARBON STEEL + WOL	SA105 + SS 304L WOL
06	INTERNALS, EARTHING LUG	STAINLESS STEEL	UNS S31603
07	EXT. ATTACHMENT, LIFTING LUGS	CARBON STEEL	SA516 GR.70
08	GASKET	SS 316L SPIRAL WOUND GRAFIL FILED WITH SS316L INNER RING & CS OUTER RING	ASME B16.20
09	BOLTING (EXT)	ALLOY STEEL	SA193 GR.B7M / SA194 GR.2HM
10	BOLTING (INT)	STAINLESS STEEL	UNS S31603
11	SADDLE SUPPORT	CARBON STEEL	SA516 GR.70 / IS 2062 E250B
12	ANCHOR BOLTS (BY LTHE)	CARBON STEEL	IS 2062 E250 BR/B0

TABLE OF NOZZLES AND FLANGES

MARK NO.	QTY.	SERVICE	NB (N.P.S)	O.D.	I.D. AFTER CLAD	SCH. THK.	R.F.PAD WIDTH x THK.	RATING CLASS	TYPE/ FACE	PROJE. FROM C.L	REMARKS
B01	1	BOOT	I.D. 1160			– APD	ø2500 x (48+3)	–	–	–	
13	1	MANWAY+B.F.+DAVIT	600 (24")	610	576	– 14+3	300 x 25	300	WN/R.F.	AS PER DRAWING	
12	1	PRESSURE GAUGE	80 (3")	117	66.2	-- 20.4+WOL	60 x 25	300	LWN/R.F.	AS PER DRAWING	
11	1	TEMPERATURE TAP	80 (3")	117	66.2	-- 20.4+WOL	60 x 25	300	LWN/R.F.	AS PER DRAWING	
10	1	HEATER CONNECTION	250 (10")	273	232.82	SCH.80 WOL	135 x 25	300	WN/R.F.	AS PER DRAWING	
9A–9J	10	LEVEL TAPS	80 (3")	117	66.2	-- 20.4+WOL	60 x 25/ 60 x 28	300	LWN/R.F.	AS PER DRAWING	60 x 28 FOR 9H,J
8	1	VENT	80 (3")	117	66.2	-- 20.4+WOL	40 x 25	300	LWN/R.F.	AS PER DRAWING	
7	1	VENTILATION +BF	200 (8")	219.1	183.7	SCH.80 WOL	110 x 25	300	WN/R.F.	AS PER DRAWING	
6	1	STEAM OUT	80 (3")	117	66.2	-- 20.4+WOL	60 x 25	300	LWN/R.F.	AS PER DRAWING	
5	1	GAS BLANKETING	200 (8")	219.1	163.08	SCH.160 WOL	110 x 25	300	WN/R.F.	AS PER DRAWING	
4	1	SEAL OIL RETURN	80 (3")	117	66.2	-- 20.4+WOL	60 x 25	300	LWN/R.F.	AS PER DRAWING	
3	1	LIQUID OUTLET	80 (3")	117	66.2	-- 20.4+WOL	60 x 25	300	LWN/R.F.	AS PER DRAWING	
2	1	WATER OUTLET	80 (3")	117	66.2	-- 20.4+WOL	60 x 28	300	LWN/R.F.	AS PER DRAWING	
1	1	FEED INLET	80 (3")	117	66.2	-- 20.4+WOL	60 x 25	300	LWN/R.F.	AS PER DRAWING	
NOZZLES								FLANGES AS PER ASME B16.5–2013			

MES-01: AI (Authorized inspector) review is pending for drawing and calculation for this tag, hence M/s BHEL to take approval on drawings and calculation from AI and comments to be incorporated in drawings/calculation if require before performing HYDROTEST OF VESSESL, the same is M/S BHEL responsibility to ensure consistency between calculation & drawings.

This drawing is also submitted to Client/PMC for approval, and hence LTHE's approval is subjected to PMC approval. PMC comments if any upon receipt will be shared and vendor shall comply to those comments without any cost and time implications.

L&T - CHIYODA LIMITED

- ☑ REVIEW CODE 1 – NO COMMENTS PROCEED WITH MANUFACTURE / FABRICATION/ CONSTRUCTION AS PER THE DOCUMENT. (W/MINOR COMMENTS FOR AS-BUILT)
- ☐ REVIEW CODE 2 – PROCEED WITH MANUFACTURE/ FABRICATION /CONSTRUCTION AS PER THE COMMENTED DOCUMENT. REVISED DOCUMENT REQUIRED.
- ☐ REVIEW CODE 3 – DOCUMENT DOES NOT CONFORM TO BASIC REQUIREMENTS AS MARKED. RESUBMIT FOR REVIEW.
- ☐ R – DOCUMENT IS RETAINED FOR RECORDS. PROCEED WITH MANUFACTURE / FABRICATION
- ☐ V-VOID

COMMENTED BY	REVIEWED BY	APPROVED BY	DATE
PBD	KMD	AG/MS	09/04/21

THIS REVIEW / APPROVAL DOES NOT RELIEVE THE VENDOR / MANUFACTURER OF THE FULL RESPONSIBILITY AS TO DESIGN CORRECTNESS OF DIMENSIONS & COMPLIANCE WITHALL APPLICABLE REGULATIONS AND WITH THE REQUIREMENTS MADE IN PURCHASER SPECIFICATIONS.

DRG. CATEGORY: (USE TICK MARK) R I — SCH. DATE OF SUBMISSION — DOCUMENT STATUS — STATEMENT OF SUB: 1st 2nd 3rd — ☐ FINAL FOR CODE-1 ☐ AS BUILT — ISSUED FOR ☐ AS BUILT ☐ INFORMATION ☐ CONSTRUCTION ☐ REVIEW — SIGN: DATE:

EIL REVIEW/APPROVAL CODE: — VPTL NO.:
- ☐ REVIEW CODE 1 – NO COMMENTS PROCEED WITH MANUFACTURE / FABRICATION/ CONSTRUCTION AS PER THE DOCUMENT.
- ☐ REVIEW CODE 2 – PROCEED WITH MANUFACTURE / FABRICATION / CONSTRUCTION AS PER THE COMMENTED DOCUMENT. REVISED DOCUMENT REQUIRED.
- ☐ REVIEW CODE 3 – DOCUMENT DOES NOT CONFORM TO BASIC REQUIREMENTS AS MARKED. RESUBMIT FOR REVIEW.
- ☐ R – DOCUMENT IS RETAINED FOR RECORDS. PROCEED WITH MANUFACTURE / FABRICATION
- ☐ V-VOID

NAME DICIPLINE SIGN. DATE

REV.	DESCRIPTION	DRN	CHECKED	APPROVED	REVIEWED	APPROVED	DATE
02	ISSUED FOR APPROVAL	NPR	IM	YPK			18-03-21
01	ISSUED FOR APPROVAL	NPR	IM	YPK			26-10-20
00	ISSUED FOR APPROVAL	IZM	YPK	YPK			11-06-20

OWNER: HINDUSTAN PETROLEUM CORPORATION LIMITED
VISAKH REFINERY MODERNIZATION PROJECT
EPCC-03 PACKAGE FOR RESIDUE UP-GRADATION FACILITY (RUF)

PMC: इंजीनियर्स इंडिया लिमिटेड (भारत सरकार का उपक्रम) ENGINEERS INDIA LIMITED (A Govt. of India Undertaking)

LSTK CONTRACTOR: L&T Hydrocarbon Engineering

DETAILED ENGINEERING CENTER: L&T - CHIYODA LIMITED

VENDOR: Bharat Heavy Electricals Limited
UNIT: HEAVY PLATES & VESSELS PLANT
VISAKHAPATNAM-530012

VENDOR PO NO: REFINERY/75000-66912/NG DT:18.03.2020

VENDOR DWG. NO: 1-PV-050-U0088, REV.2

DATE	SCALE	TITLE:
11.06.20	1 : 50	GENERAL ASSEMBLY OF SEAL OIL RESERVIOR ITEM NO. 504-V-122
DEPT:	HT ENGG.	
DRN BY:	IZM	PROJECT: — DRG. NO.: B016-RUF-LT-504-MS-GA-BHEL(1)-02151 — SH. 01 of 01
CHK BY:	YPR	PWO NO.: — REV. 02
APP BY:	YPR	CAD REVISE THIS DRG. USING CAD SYSTEM ONLY FILE:

ALL RIGHTS RESERVED
THIS DOCUMENT AND ANY DATA AND INFORMATION CONTAINED THEREIN ARE CONFIDENTIAL AND THE PROPERTY OF L&T HYDROCARBON ENGINEERING (LTHE) AND THE COPYRIGHT THEREIN IS VESTED IN LTHE NO PART OF THIS DOCUMENT, DATA, OR INFORMATION SHALL BE DISCLOSED TO OTHERS OR REPRODUCED IN ANY MANNER OR USED FOR ANY PURPOSE WHATSOEVER, EXCEPT WITH THE PRIOR WRITTEN PERMISSION OF LTHE.

A1

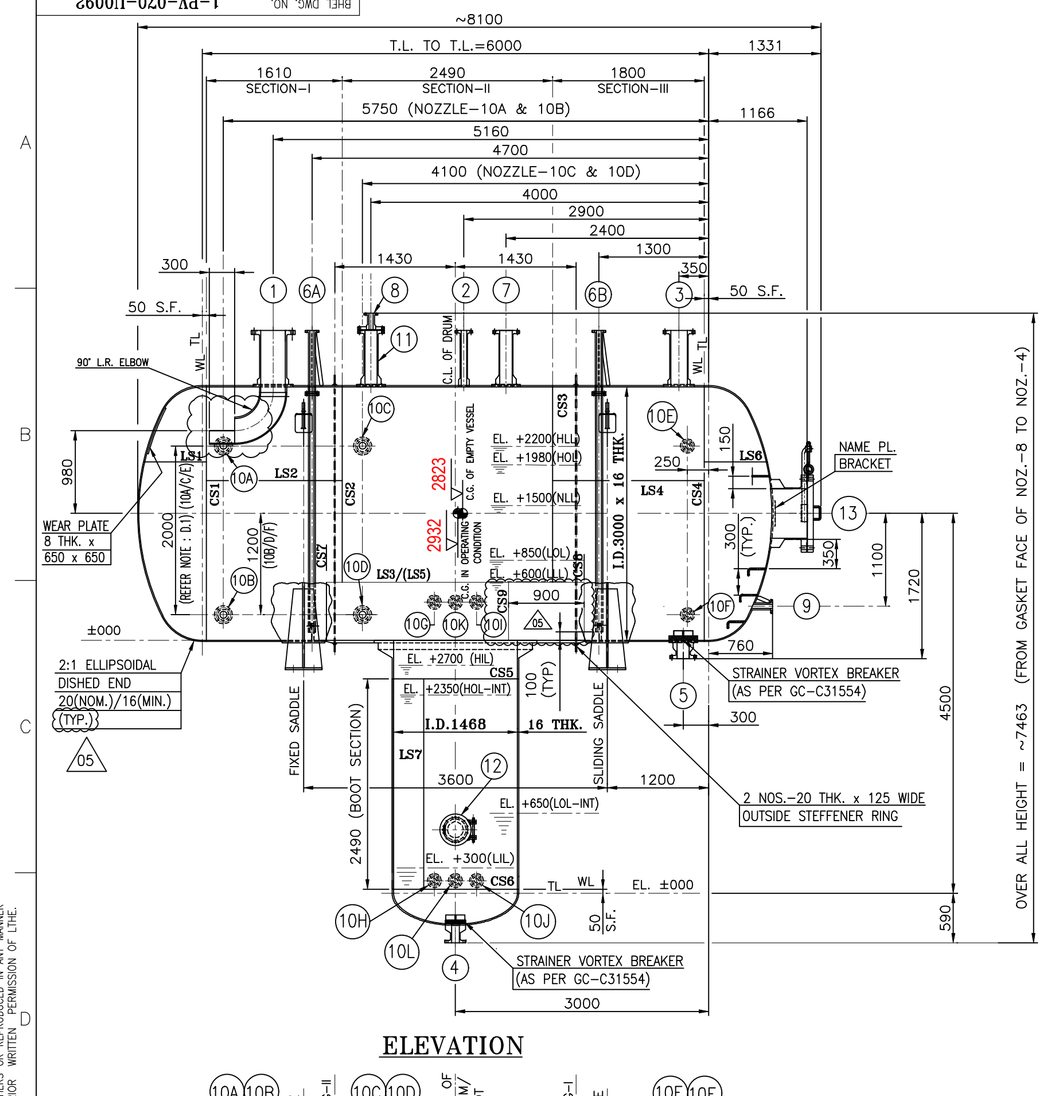

ELEVATION

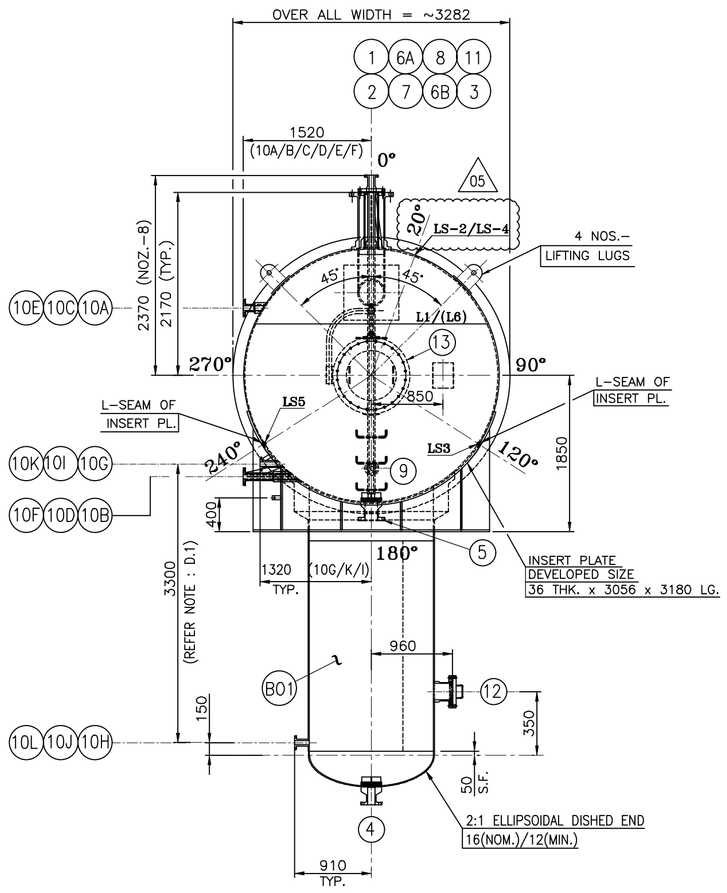

LIST OF PARTS

$ REFER NOTE B.4. OF GENERAL NOTES.

SL.NO.	DESCRIPTION	MATERIAL REFERENCE	REFERENCE SPECIFICATION
01	SHELL, SHELL D'ENDS, BOOT, BOOT D'END, STIFFENERS	CARBON STEEL	SA 516 GR.70 $
02	NOZZLES (SR/LWN)	CARBON STEEL FORGED NOZZLE	SA 105 $
03	INTERNALS, VORT. BREAKER/ WEAR PLATE	CS / SS	SA 516 GR.70; SA 106 GR.B / SA 240 GR. 304L (UNS S30403)
04	GASKET	SS 316 SPIRAL WOUND GRAFIL FILLED WITH SS 316 INNER RING & C.S. OUTER RING	ASME B16.20
05	INTERNAL BOLTING	STAINLESS STEEL	SS 304 (SA 193 GR.B8 / SA 194 GR.8)
06	PIPE FITTINGS	CARBON STEEL	SA 234 WPB $
07	EXT. ATTACHMENTS/LIFTING LUG/ WRAPPER PLATE	CARBON STEEL	SA 516 GR.70 $
08	SADDLE SUPPORT/EARTHING LUG	CARBON STEEL	IS 2062 E250B/ SA 240 GR. 304/304L
09	SETTING BOLTS/ NUTS/ WASHER	CARBON STEEL	IS 3757 & IS:4000 OF CL. 8.8 (MIN.)/ (HIGH STRENGTH & HOT DIP GAVANISED) HEX. NUT : IS:6623, WASHER : IS:6629
10	EXTERNAL BOLTING	ALLOY STEEL	SA 193 GR.B7M /SA 194 GR.2HM
11	NAME PLATE/ BRACKET	S.S./CARBON STEEL	SA 240 GR 304 / SA 516 GR.70

TABLE OF NOZZLES AND FLANGES

MARK NO.	QTY.	SERVICE	N.P.S.	O.D.	SCH. THK.	RATING CLASS	TYPE/FACE	PROJECTION	R.F.PAD WIDTH×THK.
B01	1	BOOT	–	1500	– / 16	–	SRN/--	SEE DRG.	LIP
13	1	MANWAY + B.F. + DAVIT	600 (24")	610	– / 16	300	SRN/R.F.	SEE DRG.	LIP
12	1	HAND HOLE+B.F.+HINGE	200 (8")	219.1	– / 16	300	SRN/R.F.	SEE DRG.	LIP
11	1	VENTILATION + (B.F.)	150 (6")	168.3	– / 14	300	SRN/R.F.	SEE DRG.	LIP
10E-L	8	LEVEL TAPS & DP LT (MAGNETIC)	50 (2")	50.8 (ID)	– / 16.6	300	LWN/R.F.	SEE DRG.	–
10A-D	4	LEVEL TAPS (DIAPHRAGM)	80 (3")	64.9 (ID)	– / 12	300	SRN/R.F.	SEE DRG.	–
9	1	STEAM OUT	50 (2")	50.8 (ID)	– / 16.6	300	LWN/R.F.	SEE DRG.	–
8	1	VENT	50 (2")	84.0	– / 16.6	300	SRLWN/R.F.	SEE DRG.	–
7	1	PRESSURE RELIEF	150 (6")	168.3	– / 14	300	SRN/R.F.	SEE DRG.	LIP
6A-B	2	MINIMUM FLOW	50 (2")	50.8 (ID)	– / 16.6	300	LWN/R.F.	SEE DRG.	–
5	1	OIL OUTLET	150 (6")	168.3	– / 14	300	SRN/R.F.	SEE DRG.	LIP
4	1	WATER OUTLET	100 (4")	114.3	– / 12	300	SRN/R.F.	SEE DRG.	–
3	1	VAPOUR OUTLET	200 (8")	219.1	– / 16	300	SRN/R.F.	SEE DRG.	LIP
2	1	LIQUID FEED	80 (3")	88.9	– / 12	300	SRN/R.F.	SEE DRG.	–
1	1	FEED INLET	200 (12")	323.8	– / 16	300	SRN/R.F.	SEE DRG.	LIP

DESIGN DATA

SERVICE	---		
DESIGN PRESSURE (INTL. | EXTERNAL) MPa (kg/sq.cm)(g)	0.343 (3.50)	0.103 / (FV (1.055)) AT HIGHEST POINT	
MAXIMUM ALLOWABLE WORKING PRESSURE MPa (kg/sq.cm) (g)	0.343 (3.50)		
MAXIMUM ALLOWABLE PRESSURE MPa (kg/sq.cm) (g)	1.461 (14.90)		
MAXIMUM ALLOWABLE EXT. WORKING PRESSURE MPa (kg/sq.cm) (g)	0.157 (1.600)		
MAXIMUM ALLOWABLE CORROSION ALLOWANCE (mm)	1.5	MDMT AT MAWP : 12.5°C @ 3.5 Kg/sq.cm	
DESIGN TEMPERATURE (°C) (INT. / EXT.)	260/260		
OPERATING PRESSURE MPa (kg/sq.cm) (g)	0.039 (0.40)		
OPERATING TEMPERATURE (°C)	52		
STEAM OUT CONDITON MPa (kg/sq.cm) (g)	0.049 (0.5) @ 170 °C		
LOWEST ALLOWABLE MDMT (°C) : -48	COINCIDENT MAXIMUM PRESSURE : 0.343 (3.5) MPa (kg/sq.cm)(g)		
HYD.TEST PRESSURE-UG 99(c) MPa (kg/sq.cm) (g)	1.872(19.09) AT 17 °C(MIN)/48°C(MAX)		(AT TOP, AT SHOP)
HYD.TEST PRESSURE-UG 99(b) MPa (kg/sq.cm) (g)	0.446(4.55) AT 17 °C (MIN)/48°C(MAX)		(AT TOP, AT SITE)
CORROSION ALLOWANCE mm	6 (INTERNAL & BOOT)		4.5 (SHELL & HEADS)
CAPACITY (cu.m)	54.98	CLAD (mm)	NOT APPLICABLE
RADIOGRAPHY:	SHELL:100% HEAD:100%	DEGREE OF RADIOGRAPHY: RT-1	
JOINT EFFICIENCY	SHELL: 1.0 HEAD: 1.0	EMPTY WEIGHT (Kg.): ~24700	
IMPACT TESTING = EXEMPTED (AS PER UCS-66(c), & NOTE (4) OF FIG UCS-66)		FAB. WEIGHT (Kg.): ~21200	
OTHER LOADINGS : YES AS PER UG-22(a), (b), (c), (d), (2), (f), (j)		OPERATION WEIGHT (Kg.): ~68600	
INSULATION / FIRE PROOFING	NA / NA	TEST WEIGHT (Kg.) : ~79700	
DENSITY OF FLUID: Kg./ cu.m (LIQUID/WATER)	762 / 982 @53 °C	SPECIAL SERVICE : HIC RESISTANT CRITERIA (ON-9), SUPP.CUT-C, 6-79-0013	
POST WELD HEAT TREATMENT (AS PER UW-2, UCS-56, UCS-68)	YES (REFER TABLE-1)	CYCLIC SERVICE : NO	
POST FORMING HEAT TREATMENT(HEAD)	NOT REQD. AS PER 4.31 (c) OF 6-12-0002	NATIONAL BOARD REGISTRATION	NOT REQUIRED
CODE STAMP REQUIRED	☒ YES ☐ NO	CONSIGNMENT SIZE : ODC/~~ORDINARY~~	
NB CODE STAMP REQUIRED	☐ YES ☒ NO	POSITION OF VESSEL : HORIZONTAL	
ASME CERTIFICATION MARK : YES WITH "U" DESIGNATOR	VESSEL SL.NO. : 26664	HYDROTEST POSITION : HORIZONTAL IN SHOP	
CODE: ASME BPVC.VIII.1: ED-2019	INSPECTION: AUTHORISED INSPECTION:	M/s TUV + BV (AI)	
NOZZLE LOAD DATA	APPLICABLE	STAGE WISE & THIRD PARTY INSPCTION:	YES
WIND CODE: IS 875, PART:3-2015; WIND ZONE: 6; RISK FACTOR: 1; WIND SPEED: 52 m/sec; TERRAIN CATEGORY: 3; TOPOGRAPHY FACTOR : 1			
SEISMIC CODE: IS 1893(PART 4)-2015& SITE SPECTRA; SEISMIC ZONE : III; IMPORTANCE FACTOR : 2; EQUIPMENT CATEGORY : 1			
LOCATION OF INSTALLATION	M/s. HPCL – VISAKHAPATNAM, A.P, INDIA		

FOR GENERAL NOTES & OTHER APPLICABLE STD. PLEASE REFER DRG. NO.: B016-RUF-LT-504-MS-FD-BHEL(1)-02207/3-PV-070-U0152

REFERENCE DOCUMENTS/DRAWINGS

3-PV-070-U0301	B016-RUF-LT-504-MS-LS-BHEL(1)-03017	SCHEDULE OF MANDATORY SPARES & COMMISSIONING SPARES (504-V-201)	**
PPPV-2438-PV-070-001	B016-RUF-LT-504-MS-CL-BHEL(1)-02201	MECHANICAL DESIGN OF HOS PRODUCT DRUM (504-V-201)	**
2-PV-070-U0036	B016-RUF-LT-504-MS-FD-BHEL(1)-02208	TRANSPORTATION ARRANGEMENT DETAILS FOR HOS PRODUCT DRUM (504-V-201)	**
3-PV-070-U0152	B016-RUF-LT-504-MS-FD-BHEL(1)-02207	GENERAL NOTES FOR HOS PRODUCT DRUM (504-V-201)	**
3-PV-070-U0151	B016-RUF-LT-504-MS-FD-BHEL(1)-02206	NAME PLATE DETAILS FOR HOD PRODUCT DRUM (504-V-201)	**
3-PV-070-U0150	B016-RUF-LT-504-MS-FD-BHEL(1)-02205	DETAILS OF MANWAY DAVIT FOR HOS PRODUCT DRUM (504-V-201)	**
0-PV-070-U0012	B016-RUF-LT-504-MS-FD-BHEL(1)-02204	SHELL DEVELOPMENT OF HOS PRODUCT DRUM (504-V-201)	**
1-PV-070-U0094	B016-RUF-LT-504-MS-FD-BHEL(1)-02203	EXTERNAL ATTACHMENTSS OF HOS PRODUCT DRUM (504-V-201)	**
1-PV-070-U0093	B016-RUF-LT-504-MS-FD-BHEL(1)-02202	ASSEMBLY DETAILS OF HOS PRODUCT DRUM (504-V-201)	**
BHEL DRAWING NO.	CLIENT DOCUMENT NO.	DRAWING TITLE	REV. No.

** SHALL BE MENTIONED DURING AS-BUILT DRAWING

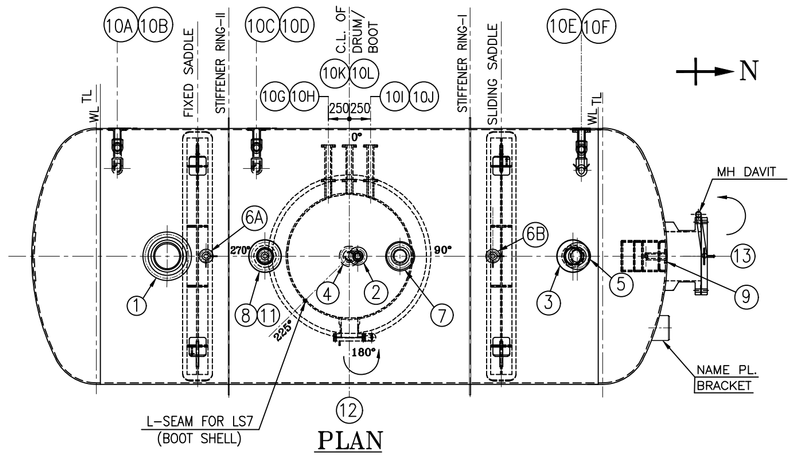

PLAN

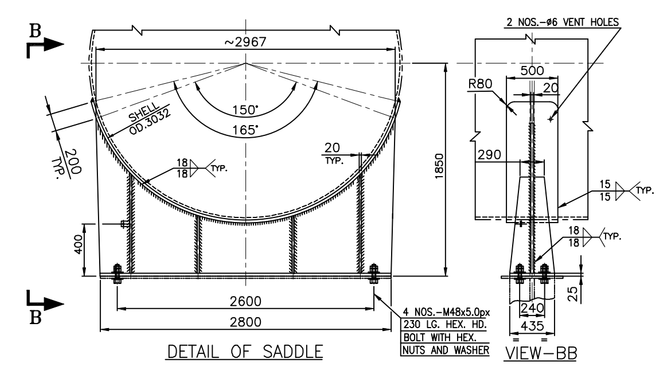

DETAIL OF SADDLE

EARTHING LUG (2 NOS.)

NOTE:-DO NOT PAINT THE EARTHING LUGS

APPLICABLE STANDARDS :

1. ASME BOILER & PRESSURE VESSEL CODE SEC VIII DIV 1 : ED-2019
2. ASME BOILER & PRESSURE VESSEL CODE SEC II PART A, C & D : ED-2019
3. ASME BOILER & PRESSURE VESSEL CODE SEC V : ED-2019
4. ASME BOILER & PRESSURE VESSEL CODE SEC IX ED-2019
5. ASME B16.5 ED-2013-STANDARD FOR PIPE FLANGES AND FLANGED FITTINGS.
6. ASME B16.11 ED-2016 FORGED STEEL FITTINGS, SOCKET WELDED & THREADED
7. ASME B36.10M ED-2018 WELDED AND SEAMLESS WROUGHT STEEL PIPE
8. ASME B1.20.1 ED2013 PIPE THREADS, GENERAL PURPOSE (INCH)
9. ASME B16.20 ED2017 METALLIC GASKETS FOR PIPE FLANGES

HEAT-TREATMENT DETAILS (TABLE-1)

PART	PROCEDURE	LOADING TEMP.	HOLDING TEMP.	HEATING RATE	HOLDING TIME	COOLING RATE	REMARKS
COMPLETE VESSEL	PWHT/STRESS RELIEVING	<400 °C	610 °C ± 15 °C	155 °C/HR	90 MINUTES (MINIMUM)	195 °C/HR	COOLING IN STILL AIR; UNLOADING <400°C

BOLT TORQUE

BOLT SIZE	JOINT	TORQUE(N-m)
1¼-8UN	MANWAY TO BLIND FLANGE	606

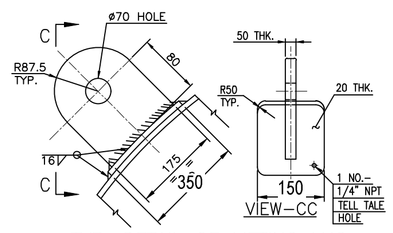

TYP. DETAIL OF LIFTING LUG

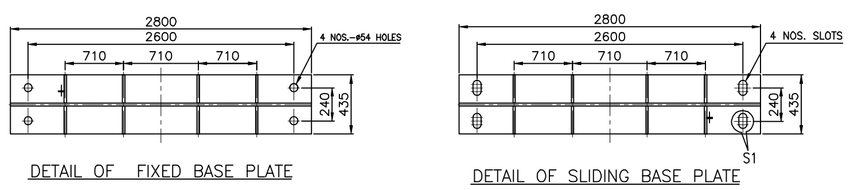

DETAIL OF FIXED BASE PLATE

DETAIL OF SLIDING BASE PLATE

DETAIL S1

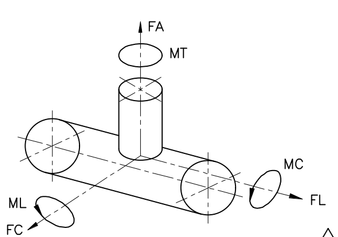

ON SHELL

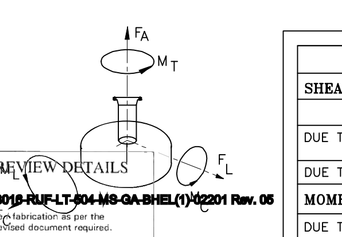

ON DISHED END

MAX. ALLOWABLE NOZZLE LOAD

Nozzle Mark	NPS	FA (kgf)	FC (kgf)	FL (kgf)	MT (kgf-m)	ML (kgf-m)	MC (kgf-m)
9	2	200	200	200	50	40	30
7	6	600	600	600	450	360	270
6A-B	2	200	200	200	50	40	30
5	6	600	600	600	450	360	270
4	4	400	400	400	200	160	120
3	8	800	800	800	800	640	480
2	3	300	300	300	112	90	67
1	12	1700	1900	1200	1600	1440	1080

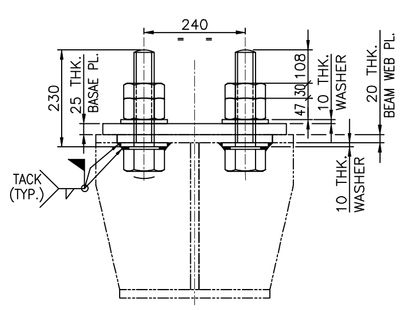

DETAIL OF SETTING BOLTS WITH BEAM

LOAD DATA

SHEAR AT BASE (KG)	EMPTY	IN OPERATION
DUE TO SEISMIC	–	MCE 13350
		DBE 10250
DUE TO WIND	–	4750
MOMENT AT BASE (KG-M)		
DUE TO SEISMIC	–	MCE 24750
		DBE 19050
DUE TO WIND	–	8850

WELD JOINT TOLERANCES TABLE – 1

Sl.No.	TOLERANCE APPLICABLE	TOLERANCE
01.	BEVEL ANGLE / INCLUDING ANGLE	
	a). > 35°	± 5°
	b). 20° – 35°	± 2°
	c). < 20°	± 1°
02.	ROOT GAP	
	a). ≤ 3	± 1
	b). 1 < ROOT GAP < 3	± 0.5
	c). ≤ 1	+0.5 −0.0

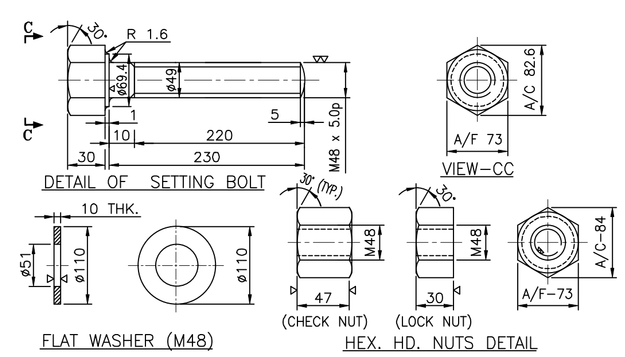

DETAIL OF SETTING BOLT

FLAT WASHER (M48)

HEX. HD. NUTS DETAIL

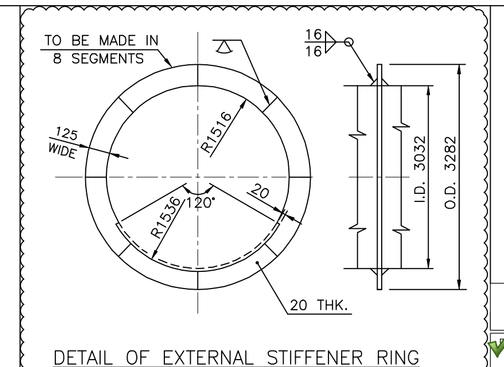

DETAIL OF EXTERNAL STIFFENER RING

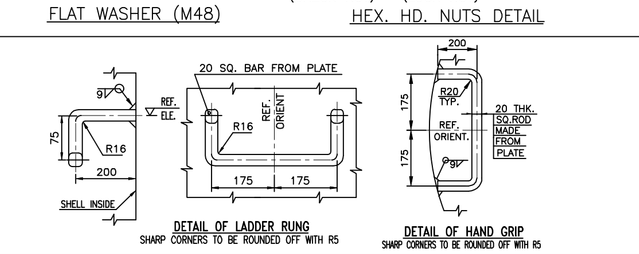

DETAIL OF LADDER RUNG
SHARP CORNERS TO BE ROUNDED OFF WITH R5

DETAIL OF HAND GRIP
SHARP CORNERS TO BE ROUNDED OFF WITH R5

L&T - CHIYODA LIMITED

☑ REVIEW CODE 1 – NO COMMENTS PROCEED WITH MANUFACTURE / FABRICATION/ CONSTRUCTION AS PER THE DOCUMENT.
☐ REVIEW CODE 2 – PROCEED WITH MANUFACTURE/ FABRICATION /CONSTRUCTION AS PER THE COMMENTED DOCUMENT. REVISED DOCUMENT REQUIRED.
☐ REVIEW CODE 3 – DOCUMENT DOES NOT CONFORM TO BASIC REQUIREMENTS AS MARKED. RESUBMIT FOR REVIEW.
☐ R – DOCUMENT IS RETAINED FOR RECORDS. PROCEED WITH MANUFACTURE / FABRICATION
☐ V-VOID

PBD	KMD	AG/MS	04/03/21
COMMENTED BY	REVIEWED BY	APPROVED BY	DATE

THIS REVIEW / APPROVAL DOES NOT RELIEVE THE VENDOR / MANUFACTURER OF THE FULL RESPONSIBILITY AS TO DESIGN CORRECTNESS OF DIMENSIONS & COMPLIANCE WITHALL APPLICABLE REGULATIONS AND WITH THE REQUIREMENTS MADE IN PURCHASER SPECIFICATIONS.

DRG. CATEGORY: (USE TICK MARK) R I
EIL REVIEW/APPROVAL CODE:
VPTL NO.:
SCH. DATE OF SUBMISSION
DOCUMENT STATUS
STATEMENT OF SUB: 1st 2nd 3rd
☐ FINAL FOR CODE-1 ☐ AS BUILT
ISSUED FOR
☐ AS BUILT ☐ INFORMATION
☐ CONSTRUCTION ☐ REVIEW
SIGN: DATE:

☐ REVIEW CODE 1 – NO COMMENTS PROCEED WITH MANUFACTURE / FABRICATION/ CONSTRUCTION AS PER THE DOCUMENT.
☐ REVIEW CODE 2 – PROCEED WITH MANUFACTURE / FABRICATION / CONSTRUCTION AS PER THE COMMENTED DOCUMENT. REVISED DOCUMENT REQUIRED.
☐ REVIEW CODE 3 – DOCUMENT DOES NOT CONFORM TO BASIC REQUIREMENTS AS MARKED. RESUBMIT FOR REVIEW.
☐ R – DOCUMENT IS RETAINED FOR RECORDS. PROCEED WITH MANUFACTURE / FABRICATION
☐ V-VOID

REV.	DESCRIPTION	DRN	CHECKED	APPROVED	REVIEWED	APPROVED	DATE
05	REVISED AS PER L&T & PMC COMMENTS	T.S.S.RAO	D.SATISH	A.N.V.K.K.	---	---	04.03.2021
04	REVISED AS PER L&T & PMC COMMENTS	T.S.S.RAO	D.SATISH	A.N.V.K.K.	---	---	18.01.2021
03	REVISED AS PER L&T & PMC COMMENTS	T.S.S.RAO	D.SATISH	A.N.V.K.K.	---	---	04.12.2020
02	REVISED AS PER L&T & PMC COMMENTS	T.S.S.RAO	D.SATISH	A.N.V.K.K.	---	---	05.08.2020
01	REVISED AS PER L&T COMMENTS	T.S.S.RAO	D.SATISH	A.N.V.K.K.	---	---	07.07.2020
00	ISSUED FOR APPROVAL	T.S.S.RAO	D.SATISH	A.N.V.K.K.	---	---	14.05.2020

OWNER: HINDUSTAN PETROLEUM CORPORATION LIMITED
VISAKH REFINERY MODERNIZATION PROJECT
EPCC-03 PACKAGE FOR RESIDUE UP-GRADATION FACILITY (RUF)

PMC: इंजीनियर्स इंडिया लिमिटेड (भारत सरकार का उपक्रम) ENGINEERS INDIA LIMITED (A Govt. of India Undertaking)

LSTK CONTRACTOR: L&T Hydrocarbon Engineering

DETAILED ENGINEERING CENTER: L&T - CHIYODA LIMITED

VENDOR: Bharat Heavy Electricals Limited
UNIT: HEAVY PLATES & VESSELS PLANT
VISAKHAPATNAM-530012

BHEL PO NO: REFINERY / 75000-66912 / NG ; DATE :18.03.2020

BHEL DWG. NO: 1-PV-070-U0092, REV.04A

DATE 14.05.2020 | SCALE 1 : 50

TITLE: GENERAL ASSEMBLY OF HOS PRODUCT DRUM (504-V-201)

DEPT: PP ENGG.
DRN BY: T.S.S.RAO
CHK BY: A.N.V.K.K./ D.SATISH
APP BY: Y.P.KUMAR
PROJECT:
DRG. NO.: B016-RUF-LT-504-MS-GA-BHEL(1)-02201
SH. 1 OF 1
PWO NO.: –
REV. 05
CAD: REVISE THIS DRG. USING CAD SYSTEM ONLY FILE:

THIS DOCUMENT AND ANY DATA AND INFORMATION CONTAINED THEREIN ARE CONFIDENTIAL AND THE PROPERTY OF L&T HYDROCARBON ENGINEERING (LHE) AND THE COPYRIGHT THEREIN IS VESTED IN LHE. NO PART OF THIS DOCUMENT MAY BE REPRODUCED IN ANY MANNER OR USED FOR ANY PURPOSE WHATSOEVER, EXCEPT WITH THE PRIOR WRITTEN PERMISSION OF LHE.
ALL RIGHTS RESERVED

DOCUMENT REVIEW DETAILS
1 No Comments.
2 Proceed with manufacture/ fabrication as per the commented document. Revised document required.
3 Document does not conform to basic requirements as marked. Resubmit for review.
R Retained for Records
V Void.
Doc. B016-RUF-LT-504-MS-GA-BHEL(1)-02201 Rev. 05
Signature with Date 18-MAR-2021
Name of Reviewer BELADIYA BHAGYARAJ ASHOKBHAI (D3
Page No. 1 of 12

DWG. NO.	B016-RUF-LT-504-MS-GA-BHEL(1)-02451
BHEL DRG. No.	1-PV-140-U0107

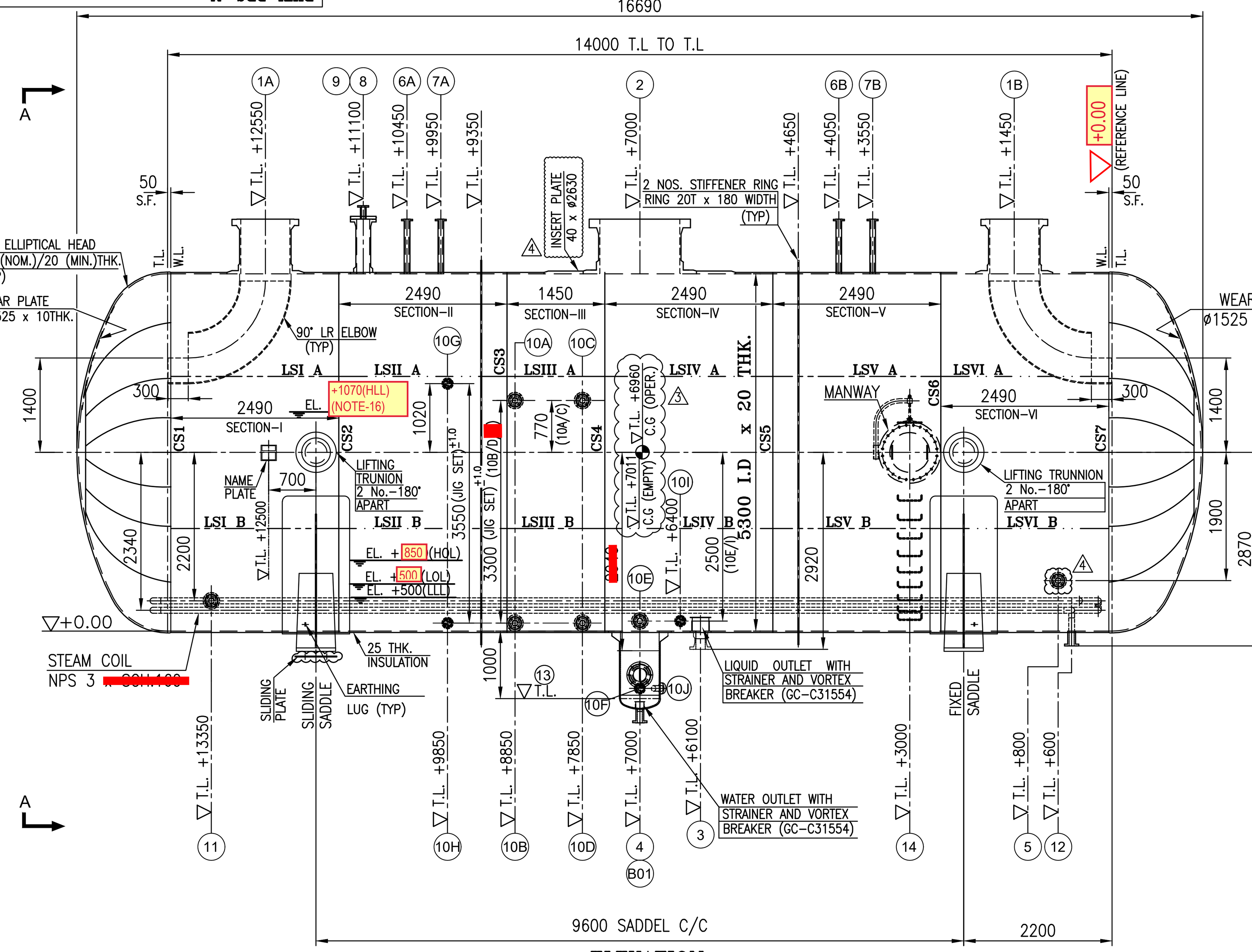

ELEVATION

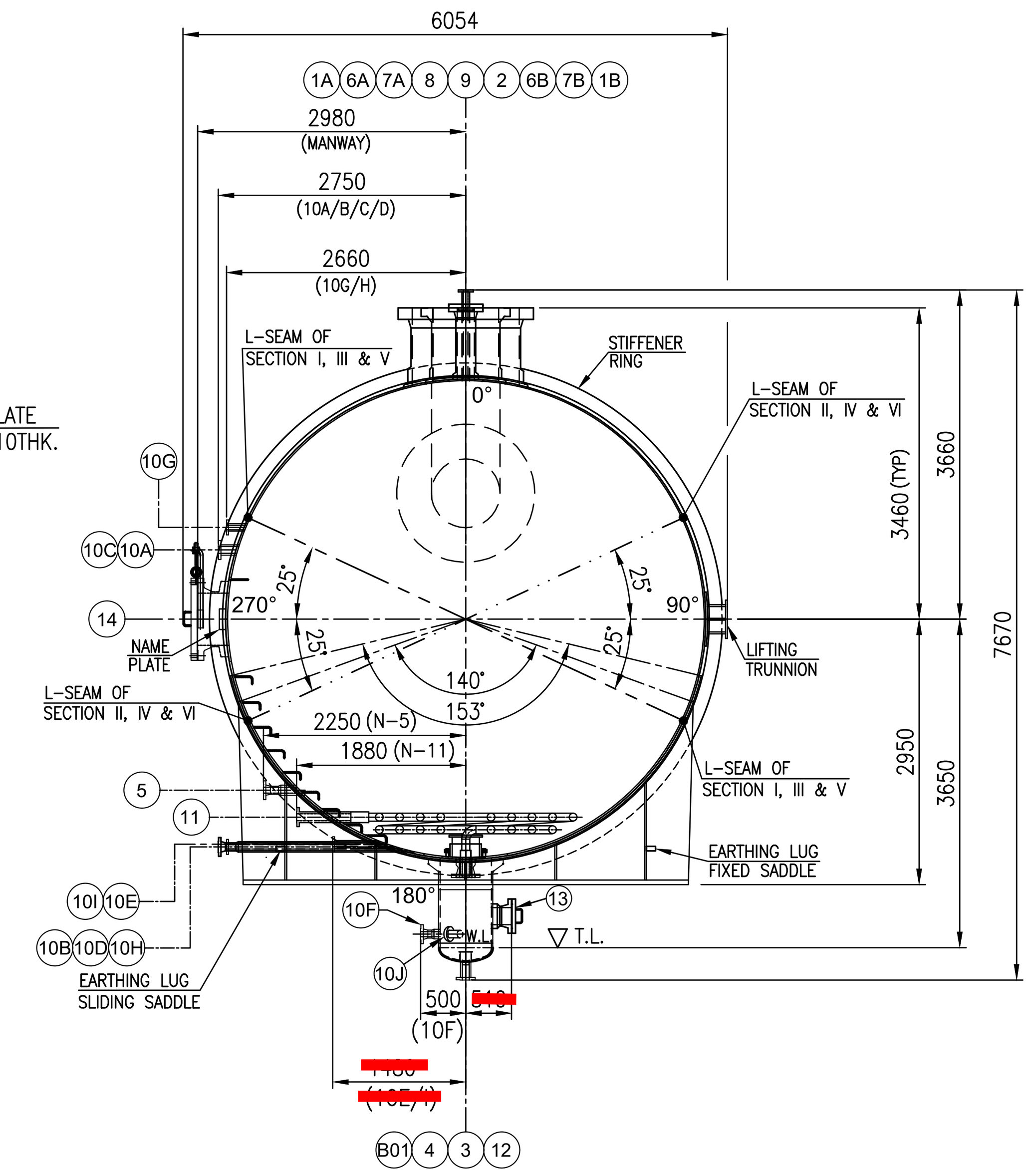

VIEW A-A

PLEASE UPDATE THE SAME IN ASSEMBLY DETAILS DRG.

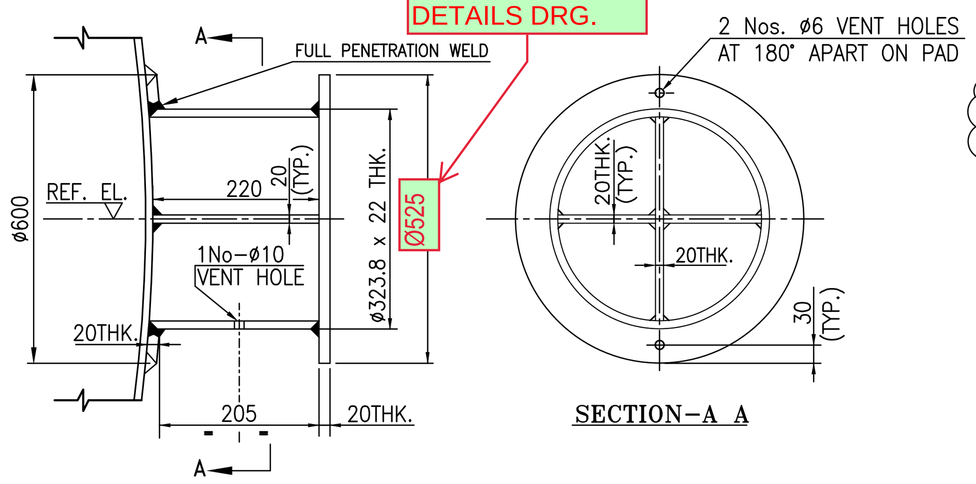

DETAIL OF LIFTING TRUNNION

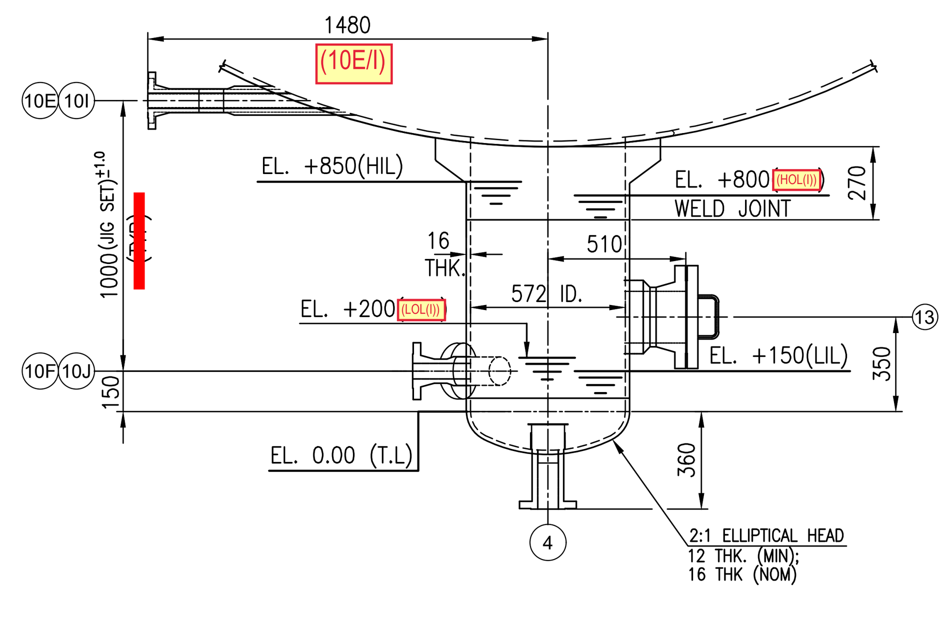

BOOT DETAIL

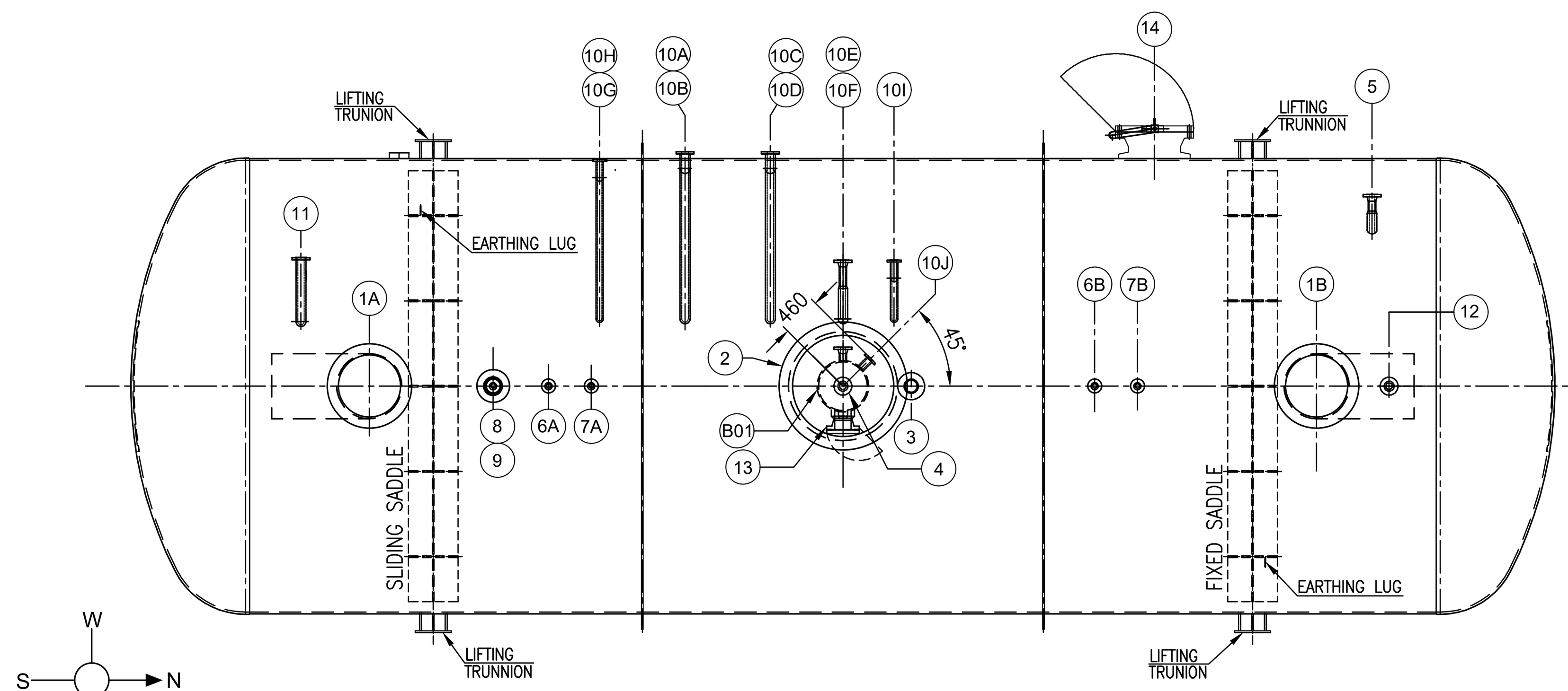

TOP VIEW

DESIGN DATA

MES-01

SERVICE	HYDRO CARBON
DESIGN PRESSURE (INTL. | EXTERNAL) MPa (kg/cm²)(g)	0.7846 (8.0) | NIL AT HIGHEST POINT
MAXIMUM ALLOWABLE WORKING PRESSURE MPa (kg/cm²)(g)	0.7846 (8.0)
MAXIMUM ALLOWABLE PRESSURE MPa (kg/cm²)(g)	1.0787 (11)
MAXIMUM ALLOWABLE EXTERNAL WORKING PRESSURE MPa (kg/cm²)(g)	0.0860 (0.877)
DESIGN TEMPERATURE (INTERNAL | EXTERNAL) (°C)	260 | NIL
OPERATING PRESSURE MPa (kg/cm²)(g)	0.509 (5.2)
OPERATING TEMPERATURE (°C)	AMBIENT TO 104
STEAM OUT CONDITON MPa (kg/cm²)(g)	0.05 (0.5) @ 170 °C
STEAM COIL DESIGN PRESSURE (INTL. | EXTERNAL) MPa (kg/cm²)(g)	1.226 (12.5) / (FULL VACUUM) | STEAM COIL AREA (m²):65
STEAM COIL DESIGN TEMPERATURE (INTL. | EXTERNAL)(°C): 300 | 300	STEAM COIL MAWP MPa (kg/cm²)(g): 1.226 (12.5)
STEAM COIL HYDRO TEST PRESSURE MPa (kg/cm²)(g): 1.594 (16.25)	STEAM COIL MAEWP MPa (kg/cm²)(g): 5.115 (52.162)
PNEUMATIC TEST PRESSURE MPa (kg/cm²) (g)	–NIL–
HYD.TEST PRESSURE AS PER UG-99(c) (AT SHOP) MPa (kg/cm²)(g)	1.295 (13.204) AT 16 °C (MIN) / 48 °C(MAX) (AT HIGHEST POINT)
HYD.TEST PRESSURE AS PER UG-99(b) (AT SITE) MPa (kg/cm²)(g)	1.019 (10.400) AT 16 °C (MIN) / 48 °C(MAX) (AT HIGHEST POINT)
CORROSION ALLOWANCE mm	6 (FIXED INTERNAL) |3 (REMOVABLE)| 3 (SHELL & HEADS)
BOOT CORROSION ALLOWANCE mm:	9 (FIXED INTERNAL) |4.5 (REMOVABLE)| 4.5 (SHELL & HEADS)
MAXIMUM ALLOWABLE CORROSION ALLOWANCE mm	4.0
CAPACITY (m³)	348.169 | CLADDING (mm) | NOT APPLICABLE
RADIOGRAPHY: (RT1)SHELL: 100% | HEAD: 100% | (COIL:100%)	JOINT EFFICIENCY SHELL: 1.0 | HEAD: 1.0 | COIL: 1.0
IMPACT TESTING = EXEMPTED (AS PER UCS-66(a), & NOTE (4) OF FIG UCS-66) = EXEMPTED (AS PER Figure UCS-66 General Notes (c)) = EXEMPTED (AS PER CURVE-B OF UCS-66)	FABRICATED WEIGHT (Kg.) : ~63341
OTHER LOADINGS : YES AS PER UG-22(a), (b), (c), (d), (2), (f), (j)	EMPTY WEIGHT (Kg.) : ~77733
INSULATION (THK./TYPE): 25 mm / HOT | FIRE PROOFING: NA	OPERATION WEIGHT (Kg.) : ~248729
DENSITY OF FLUID: Kg./ m³ | 758	TEST WEIGHT (Kg.) : ~417378
POST WELD HEAT TREATMENT (AS PER UW-2, UCS-56, UCS-68)	YES | SPECIAL SERVICE: SUPPLIMENT C (REFER NOTE-B1) | CYCLIC SERVICE : NO
POST FORMING HEAT TREATMENT	YES, AS PER THE CYCLE GIVEN BELOW*
MDMT AT MAWP: 12.5 °C AT 8 Kg/cm² (g)	MANUFACTURER'S SERIAL No : 26673
LOWEST ALLOWABLE MDMT AT COINCIDENT MAXIMUM PRESSURE: –9°C AT 11 Kg/cm²(g)	
CODE STAMP REQUIRED ☒ YES ☐ NO	CONSIGNMENT SIZE : ODC/~~ORDINARY~~
NB CODE STAMP REQUIRED ☐ YES ☒ NO	POSITION OF VESSEL : HORIZONTAL
ASME CERTIFICATION MARK: YES WITH 'U' DESIGNATOR	HYDROTEST POSITION : HORIZONTAL IN SHOP
CODE: ASME BPVC.VIII.1: ED-2019	INSPECTION: AUTHORISED INSPECTION: M/s TUV + BV (AI)
NOZZLE LOAD DATA | APPLICABLE	STAGE WISE & THIRD PARTY INSPCTION: YES
WIND SPEED: 52 M/SEC | WIND SPECIFICATION:IS 875, PART-3: 2015 ED | WIND ZONE: 6	RISK FACTOR : 1 | TERRAIN CATEGORY: 3 | TOPOGRAPHY FACTOR : 1
EARTHQUAKE SPECIFICATION: IS 1893 (PART 4)-2015 ED	NATIONAL BOARD REGISTRATION | NOT REQUIRED
EQUIMENT CATEGORY=1 & SITE SPECIFIC SEISMIC SPECTRA	IMPORTANCE FACTOR : 2 | SEISMIC ZONE : III
LOCATION OF INSTALLATION	M/S HPCL-VISAKHAPATNAM, A.P, INDIA

*DISHED ENDS SHALL BE COLD FORMED FOLLOWED BY HEAT TREATMENT CYCLE AS BELOW.

HEAT TREATMENT

Part	Procedure	Loading Temperature (°C)	Holding Temperature (°C)	Heating Rate (°C/hr)	Holding Time (min)	Cooling Rate °C/hr	Remarks
DISHED ENDS (SHELL)	STRESS RELIEVING/PFHT	<400°C	610±15°C	210°C/hr	70 minutes	270°C/hr	Unlaoding at 400°C
DISHED ENDS (BOOT)	STRESS RELIEVING/PFHT	<400°C	610±15°C	210°C/hr	45 minutes	270°C/hr	Unlaoding at 400°C
COMPLETE EQUIPMENT	STRESS RELIEVING/PWHT	<425°C	630±10°C	110°C/hr	96 minutes	140°C/hr	Unlaoding at 425°C

LIST OF PARTS (REFER NOTE B1)

SL.NO.	DESCRIPTION	MATERIAL REFERENCE	MATERIAL SPECFICATION
01	SHELL, D'END, BOOT	BQ PLATE CS	SA 516 GR.70
02	NOZZLES WITH INTEGRAL FLANGES	FORGED STEEL	SA 105
03	SADDLE WRAPPER PL., TRUNNION PAD	BQ PLATE (CS)	SA 516 GR.70
04	SADDLE SUPPORT, TRUNNION	CS	IS 2062 E250B
05	VORTEX BREAKER	CS	SA 516 GR.70 / SA 106 GR.B
06	GASKET	SS 316 SPIRAL WOUND GRAFIL FILED WITH SS316 INNER RING & CS OUTER RING	AS PER ASME B16.20
07	BOLTS & NUTS (EXT.)	ALLOY STEEL	SA193 GR.B7M/SA194 GR.2HM
08	BOLTS & NUTS (INT.)	STAINLESS STEEL	SS304L
09	PIPE FITTINGS	CS	SA 234 GR.WPB
10	EXTERNAL ATTACHMENTS	BQ PLATE (CS)	SA 516 GR.70
11	WEAR PLATE	STAINLESS STEEL	SA 240 TYP.304L (UNS S30403)
12	EARTHING LUG, SLIDING PLATE	STAINLESS STEEL	SA 240 TYP.304
13	STEAM COIL	CS	SA 106 GR.B/ SA234 GR. WPB
14	ANCHOR BOLT (LTHE SCOPE)	CS	IS 2062 E250 BR/BO

FOR GENERAL NOTES & OTHER APPLICABLE STD. PLEASE REFER DRG. NO: B016-RUF-LT-504-MS-FD-BHEL(1)-02460

BHEL DRAWING NO.	CLIENT DOCUMENT NO.	DRAWING TITLE	REV.
PPPV-2438-PV PV-140-001	B016-RUF-LT-504-MS-CL-BHEL(1)-02451	MECHANICAL DESIGN OF HP FLARE KO DRUM (504-V-801)	--
2-PV-140-U0043	B016-RUF-LT-504-MS-DW-BHEL(1)-02461	TRANSPORTATION ARRANGEMENT DETAILS FOR HP FLARE KO DRUM (504-V-801)	--
3-PV-140-U0174	B016-RUF-LT-504-MS-FD-BHEL(1)-02460	GENERAL NOTES FOR HP FLARE KO DRUM (504-V-801)	--
4-PV-140-U0052	B016-RUF-LT-504-MS-LS-BHEL(1)-03022	SCHEDULE OF MANDATORY SPARES & COMMISSIONING SPARES (504-V-801)	--
3-PV-140-U0173	B016-RUF-LT-504-MS-FD-BHEL(1)-02459	NAME PLATE DETAILS FOR HP FLARE KO DRUM (504-V-801)	--
3-PV-140-U0172	B016-RUF-LT-504-MS-FD-BHEL(1)-02458	FOUNDATION TEMPLATE FOR HP FLARE KO DRUM (504-V-801)	--
3-PV-140-U0171	B016-RUF-LT-504-MS-FD-BHEL(1)-02457	DETAILS OF MANWAY DAVIT FOR HP FLARE KO DRUM (504-V-801)	--
0-PV-140-U0016	B016-RUF-LT-504-MS-FD-BHEL(1)-02456	SHELL DEVELOPMENT OF HP FLARE KO DRUM (504-V-801)	--
1-PV-140-U0110	B016-RUF-LT-504-MS-FD-BHEL(1)-02455	INSULATION SUPPORT DETAILS FOR HP FLARE KO DRUM (504-V-801)	--
1-PV-140-U0109	B016-RUF-LT-504-MS-FD-BHEL(1)-02454	EXTERNAL ATTACHMENTS OF HP FLARE KO DRUM (504-V-801)	--
1-PV-140-U0108	B016-RUF-LT-504-MS-FD-BHEL(1)-02452	ASSEMBLY DETAILS OF HP FLARE KO DRUM (504-V-801)	--

THIS DRAWING SHALL BE READ IN CONJUNCTION WITH THE ABOVE DRAWINGS

APPLICABLE STANDARDS

1. ASME BOILER & PRESSURE VESSEL CODE SEC VIII DIV 1 : ED-2019
2. ASME BOILER & PRESSURE VESSEL CODE SEC II PART A, C & D : ED-2019
3. ASME BOILER & PRESSURE VESSEL CODE SEC V : ED-2019
4. ASME BOILER & PRESSURE VESSEL CODE SEC IX ED-2019
5. ASME B16.5 ED-2017-STANDARD FOR PIPE FLANGES AND FLANGED FITTINGS.
6. ASME B16.47 ED-2017-STANDARD FOR LARGE DIAMETER STANDARD FLANGES
7. ASME B16.11 ED-2016 FORGED STEEL FITTINGS, SOCKET WELDED & THREADED
8. ASME B36.10M ED-2018 WELDED AND SEAMLESS WROUGHT STEEL PIPE
9. ASME B1.20.1 ED2013 PIPE THREADS, GENERAL PURPOSE (INCH)
10. ASME B16.20 ED2017 METALLIC GASKETS FOR PIPE FLANGES
11. ASME B36.19M ED2018 STAINLESS STEEL PIPE

—·· —·· — L-SEAM OF SECTION II, IV, & VI

— — — — L-SEAM OF SECTION I, III, & V

NO. OF CIRCUFERENTIAL SEAMS: 7

NO. OF LONGITUDINAL SEAMS: 2 PER SECTION

NOTE-16: CORRESPONDING TO MAXIMUM LIQUID RELIEF CASE (350328 KG/HR) HOLD UP REQUIREMENT ID 32.8M3 FOR 5MIN. OF RELIEF. THE VESSEL IS HOWEVER SUITABLE TO ACCOMMODATE 196.6M3 LIQUID FOR 30MINUTES HOLD-UP, CORRESPONDING LIQUID LEVEL IS 2920MM FROM BOTTOM. LEVEL MEASUREMENT SHALL BE SUITABLE FOR ENTIRE LIQUID RANGE.

MES-02: AI (Authorized inspector) review is pending for drawing and calculation for this tag, hence M/s BHEL to take approval on drawings and calculation from AI and comments to be incorporated in drawings/calculation if require before performing HYDROTEST OF VESSESL, the same is M/S BHEL responsibility to ensure

MES-03: As per clause 2.11.5 of B016-504-80-43-SP-9509-Rev.D, vendor to provide load required by Bolt tensioner, the same is already informed to M/S BHEL and M/S BHEL will be finalized in calculation and the same is updated in GAD.

MES-01: Calculation is not with CODE-1, hence the details of HYDROTEST PRESSURE, MAEWP, MAP, LOWEST ALLOWABLE MDMT, CG, FOUNDATION LOAD DATA, FLANGE RATING etc, to be updated as per CODE-1 calculation if required before performing HYDROTEST OF VESSESL, the same is M/S BHEL responsibility to ensure consistency between calculation & drawings.

This drawing is also submitted to Client/PMC for approval, and hence LTHE's approval is subjected to PMC approval. PMC comments if any upon receipt will be shared and vendor shall comply to those comments without any cost and time implications.

TABLE OF NOZZLES AND FLANGES

MARK NO.	QTY.	SERVICE	NB (N.P.S)	O.D.	SCH. / THK.	I.D.	R.F.PAD WIDTH x THK.	RATING CLASS	TYPE/ FACE	PROJE. SEE NOTE-3	REMARKS
B01	1	BOOT	I.D.572	–	– / 16.0		LIP TYPE	–	–	AS PER DRAWING	
14	1	MANWAY+B.F.+DAVIT	600 (24")	610	– / 16.0		LIP TYPE	300	SRWN/R.F.	AS PER DRAWING	
13	1	HANDHOLE+BF+HINGE	200 (8")	219.1	– / 14.0		LIP TYPE	300	SRWN/R.F.	AS PER DRAWING	
12	1	CONDENSATE OUTLET	80 (3")	117	– / 20.4		--	300	LWN/R.F.	AS PER DRAWING	
11	1	STEAM INLET	80 (3")	117	– / 20.4		--	300	LWN/R.F.	AS PER DRAWING	
10G,H, I&J	4	LEVEL TAPS (MAGNETIC)	50 (2")	84	– / 16.6	50.8	--	300	LWN/R.F.	AS PER DRAWING	
10B,D, E&F	4	LEVEL TAPS (DIAPHRAGM)	80 (3")	88.9	– / 16.0	56.9	--	300	SRWN/R.F.	AS PER DRAWING	
10A,C	2	LEVEL TAPS (DIAPHRAGM)	80 (3")	117	– / 20.4	76.2	--	300	LWN/R.F.	AS PER DRAWING	
9	1	VENTILATION	200 (8")	219.1	– / 14		LIP TYPE	300	SRWN/R.F.	AS PER DRAWING	WITH BLIND + Noz-8
8	1	VENT	50 (2")	84	– / 16.6		--	300	LWN/R.F.	AS PER DRAWING	
7A/7B	2	TEMPERATURE TAPS	50 (2")	84	– / 16.6	50.8	--	300	LWN/R.F.	AS PER DRAWING	
6A/6B	2	PRESSURE GAUGE (PT/PI)	50 (2")	84	– / 16.6	50.8	--	300	LWN/R.F.	AS PER DRAWING	
5	1	STEAM OUT	80 (3")	88.9	– / 12.0		--	300	SRWN/R.F.	AS PER DRAWING	
4	1	WATER OUTLET	80 (3")	117	– / 20.4		--	300	LWN/R.F.	AS PER DRAWING	
3	1	OIL OUTLET	150 (8")	219.1	– / 14.0		LIP TYPE	300	SRWN/R.F.	AS PER DRAWING	
2	1	VAPOUR OUTLET	1200 (48")	1227.1	– / 30.0		LIP TYPE	300	SRWN/R.F.	AS PER DRAWING	FLANGE AS PER ASME:16.47 SERIES-B
1A & 1B	2	FEED INLET	750 (30")	768.4	– / 16.0		LIP TYPE	300	SRWN/R.F.	AS PER DRAWING	FLANGE AS PER ASME:16.47 SERIES-B

LIST OF HOLDS AS ON DATE

01. PIPE SUPPORT & PLATFORM SUPPORT CLEATS
02. NOZZLE-3 & NOZZLE-14 ELEVATION.

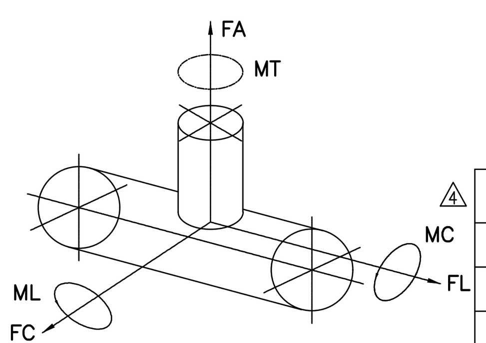

Max. Nozzle Load

Nozzle Mark	NB	FA (kgf)	FL (kgf)	FC (kgf)	MT (kgf-m)	ML (kgf-m)	MC (kgf-m)
4,5,11,12	3"	300	300	300	112	90	67
3	8"	800	800	800	800	640	480
2	48"	9500	4000	6000	15000	19000	16500
1A & 1B	30"	6900	3000	3000	11250	9000	6750

WELD JOINT TOLERANCES

TABLE - 1

Sl.No.	TOLERANCE APPLICABLE	TOLERANCE
01.	BEVEL ANGLE / INCLUDING ANGLE	
	a). > 35°	± 5°
	b). 20° - 35°	± 2°
	c). < 20°	± 1°
02.	ROOT GAP	
	a). ≤ 3	± 1
	b). 1 < ROOT GAP < 3	± 0.5
	c). ≤ 1	+ 0.5 - 0.0

LOAD DATA

SHEAR AT BASE (KG)	EMPTY	OPERATING CASE
DUE TO SEISMIC	–	37114(DBE)/48346(MCE)
DUE TO WIND	–	12517
MOMENT AT BASE (KG-M)		
DUE TO SEISMIC	–	109487(DBE)/142621(MCE)
DUE TO WIND	–	36926

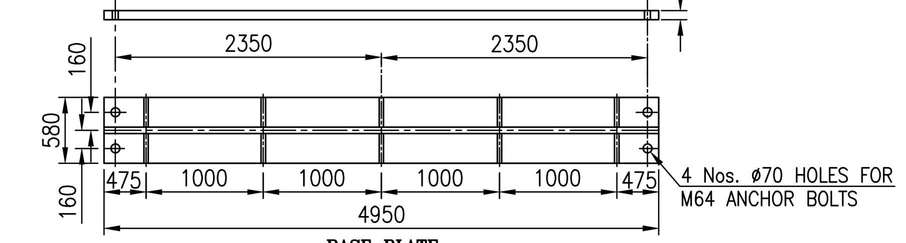

BASE PLATE FOR FIXED SADDLE

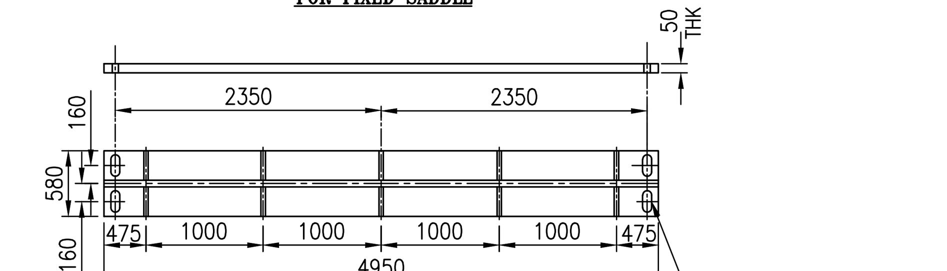

BASE PLATE FOR SLIDING SADDLE

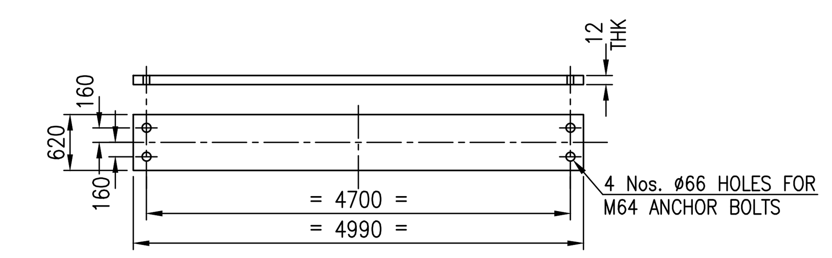

SLIDING PLATE

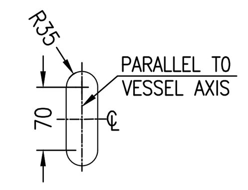

SLOT DETAIL FOR BASE PLATE OF SLIDING SADDLE (TYP)

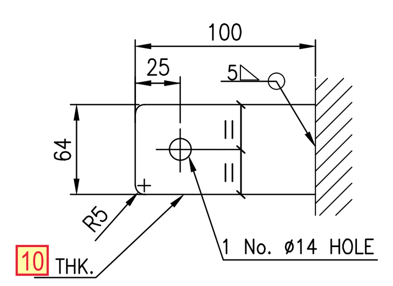

EARTHING LUG

(DO NOT PAINT)

DRAWING NO.	DRAWING TITLE	REV

REFERENCE DOCUMENTS / DRAWINGS

DRG. CATEGORY: (USE TICK MARK) R I — EIL REVIEW/APPROVAL CODE: — VPTL NO.:

SCH. DATE OF SUBMISSION

DOCUMENT STATUS — STATEMENT OF SUB: 1st 2nd 3rd

☐ FINAL FOR CODE-1 ☐ AS BUILT

ISSUED FOR: ☐ AS BUILT ☐ INFORMATION ☐ CONSTRUCTION ☐ REVIEW

SIGN: DATE:

☐ REVIEW CODE 1 - NO COMMENTS PROCEED WITH MANUFACTURE / FABRICATION/ CONSTRUCTION AS PER THE DOCUMENT.
☐ REVIEW CODE 2 - PROCEED WITH MANUFACTURE / FABRICATION / CONSTRUCTION AS PER THE COMMENTED DOCUMENT. REVISED DOCUMENT REQUIRED.
☐ REVIEW CODE 3 - DOCUMENT DOES NOT CONFORM TO BASIC REQUIREMENTS AS MARKED. RESUBMIT FOR REVIEW.
☐ R - DOCUMENT IS RETAINED FOR RECORDS. PROCEED WITH MANUFACTURE / FABRICATION
☐ V-VOID

NAME DICIPLINE SIGN. DATE

REV.	DESCRIPTION	DRN	CHECKED	APPROVED	REVIEWED	APPROVED	DATE
04	L&T COMMENTS ON REV-02 INCORPORATED	MK	AVR	TK			23.12.20
03	L&T COMMENTS ON REV-02 INCORPORATED	MK	AVR	TK			01.12.20
02	L&T COMMENTS ON REV-01 INCORPORATED	MK	AVR	TK			05.10.20
01	COMMENTS OF L&T INCORPORATED	MK	AVR	TK			25.07.20
00	ISSUED FOR APPROVAL	MK	AVR	TK			09.06.20

OWNER: HINDUSTAN PETROLEUM CORPORATION LIMITED
VISAKH REFINERY MODERNIZATION PROJECT
EPCC-03 PACKAGE FOR RESIDUE UP-GRADATION FACILITY (RUF)

PMC : इंजीनियर्स इंडिया लिमिटेड ENGINEERS INDIA LIMITED (A Govt. of India Undertaking)

LSTK CONTRACTOR: L&T Hydrocarbon Engineering

DETAILED ENGINEERING CENTER: L&T - CHIYODA LIMITED

L&T - CHIYODA LIMITED

☑ REVIEW CODE 1 - NO COMMENTS PROCEED WITH MANUFACTURE / FABRICATION/ CONSTRUCTION AS PER THE DOCUMENT. (W/MINOR COMMENTS FOR AS-BUILT)
☐ REVIEW CODE 2 - PROCEED WITH MANUFACTURE/ FABRICATION /CONSTRUCTION AS PER THE COMMENTED DOCUMENT. REVISED DOCUMENT REQUIRED.
☐ REVIEW CODE 3 - DOCUMENT DOES NOT CONFORM TO BASIC REQUIREMENTS AS MARKED. RESUBMIT FOR REVIEW.
☐ R - DOCUMENT IS RETAINED FOR RECORDS. PROCEED WITH MANUFACTURE / FABRICATION
☐ V-VOID

COMMENTED BY	REVIEWED BY	APPROVED BY	DATE
PBD	KMD	AG/MS	22/01/21

THIS REVIEW / APPROVAL DOES NOT RELIEVE THE VENDOR / MANUFACTURER OF THE FULL RESPONSIBILITY AS TO DESIGN CORRECTNESS OF DIMENSIONS & COMPLIANCE WITHALL APPLICABLE REGULATIONS AND WITH THE REQUIREMENTS MADE IN PURCHASER SPECIFICATIONS.

VENDOR : BHEL — Bharat Heavy Electricals Limited, UNIT: HEAVY PLATES & VESSELS PLANT, VISAKHAPATNAM-530012

VENDOR PO NO: Refinery/75000-66912/NG; DATE:18.03.2020

VENDOR DWG. NO: 1-PV-140-U0107, REV.04

DATE	SCALE	TITLE:
09.06.20	1 : 70	GENERAL ASSEMBLY OF HP FLARE KO DRUM ITEM NO. 504-V-801

DEPT: HT ENGG.

DRN BY: V. A. RAO — PROJECT: — DRG. NO.: B016-RUF-LT-504-MS-GA-BHEL(1)-02451 — SH. 01 of 01

CHK BY: A.V.RAO — PWO NO.: — REV. 04

APP BY: K.TARAKESH — CAD REVISE THIS DRG. USING CAD SYSTEM ONLY FILE:

A1

ALL RIGHTS RESERVED
THIS DOCUMENT AND ANY DATA AND INFORMATION CONTAINED THEREIN ARE CONFIDENTIAL AND THE PROPERTY OF L&T HYDROCARBON ENGINEERING (LTHE) AND THE COPYRIGHT THEREIN IS VESTED IN LTHE NO PART OF THIS DOCUMENT, DATA, OR INFORMATION SHALL BE DISCLOSED TO OTHERS OR REPRODUCED IN ANY MANNER OR USED FOR ANY PURPOSE WHATSOEVER, EXCEPT WITH THE PRIOR WRITTEN PERMISSION OF LTHE.

THIS DOCUMENT AND ANY DATA AND INFORMATION OWNED OR COPYRIGHTED BY L&T HYDROCARBON ENGINEERING (LTHE) AND THE COPYRIGHT THEREIN IS VESTED IN LTHE NO PART OF THIS DOCUMENT, DATA, OR INFORMATION SHALL BE DISCLOSED TO OTHERS OR REPRODUCED IN ANY MANNER OR USED FOR ANY PURPOSE WHATSOEVER, EXCEPT WITH THE PRIOR WRITTEN PERMISSION OF LTHE.
ALL RIGHTS RESERVED

BHEL DWG. NO. 1-PV-160-U0115
DWG. NO. B016-RUF-LT-504-MS-GA-BHEL(1)-02551

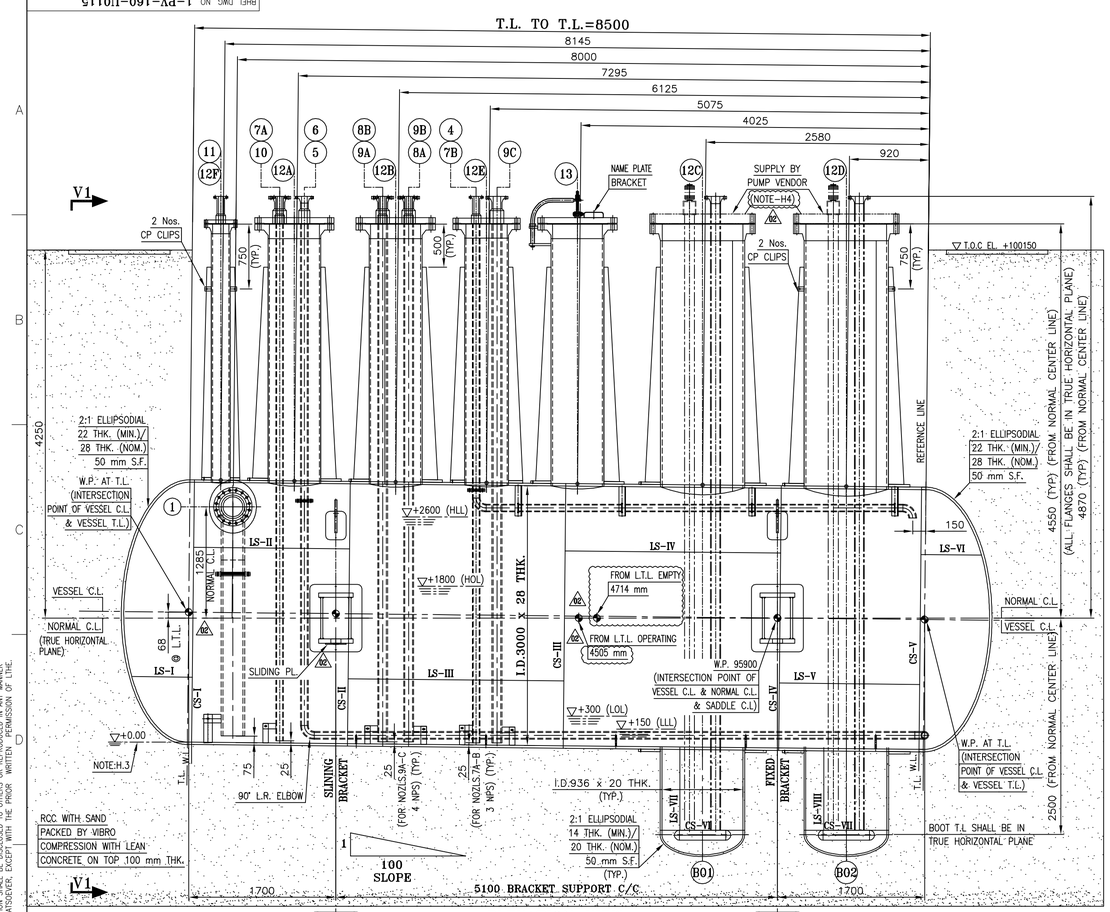

ELEVATION VIEW

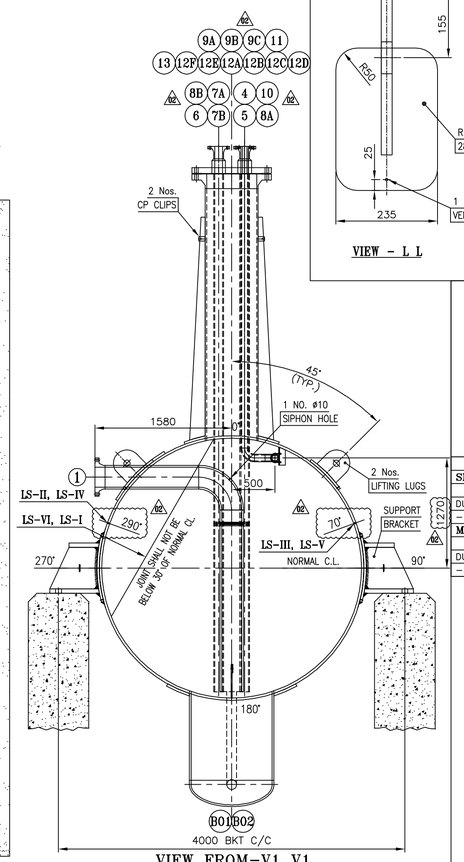

VIEW FROM-V1 V1

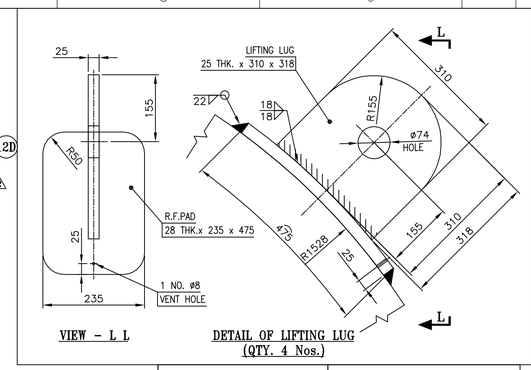

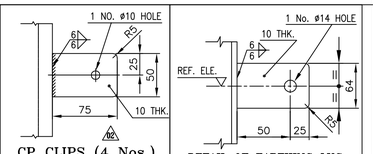

LOAD DATA

SHEAR AT BASE (KG)	EMPTY	IN OPERATION
DUE TO SEISMIC		7766
–		–

MOMENT AT BASE (KG-M)	EMPTY	IN OPERATION
DUE TO SEISMIC		10588
–		–

DESIGN DATA

SERVICE			
DESIGN PRESSURE INT/EXT – MPa	(Kg/cm²g)	0.49 (5) / 0.183 (1.87) @ HEIGHT POINT 02	
MAXIMUM ALLOWABLE WORKING PRESSURE MPa	(Kg/cm²g)	0.49 (5)	
MAXIMUM ALLOWABLE PRESSURE MPa	(Kg/cm²g)	2.4 (24.7) (LIMITED BY D'END)	
MAXIMUM ALLOWABLE EXT. WORKING PRESSURE MPa	(Kg/cm²g)	0.208 (2.127)	
MAXIMUM ALLOWABLE CORROSION ALLOWANCE	(MM)	7.2 02	
DESIGN TEMPERATURE	(INT./EXT.)(°C)	260 / 260	
OPERATING PRESSURE MPa	(Kg/cm²g)	0.147 (1.5)	
OPERATING TEMPERATURE	(°C)	56	
STEAM OUT CONDITON MPa	(Kg/cm²g)	0.049 (0.5) @ 170°C	
LOWEST ALLOWABLE MDMT & COINCIDENT MAX. PRESSURE		−48° C @ 5 (Kg/cm²g)	
HYD.TEST PRESSURE AS PER UG-99(c) MPa	(Kg/cm²g)	2.56 (26.10) AT SHOP	
HYD.TEST PRESSURE AS PER UG-99(b) MPa	(Kg/cm²g)	0.64 (6.5) AT SITE	
CORROSION ALLOWANCE (MM)	SHELL, HEADS (INT./EXT.)-3/3	REMOVABLE INTERNAL, BRACKET SUPPORT-3	PERMANENT INTERNAL-6
CAPACITY	(Kg/M³) 67.404	CLAD (mm)	NIL
RADIOGRAPHY:		SHELL: 100%	HEAD: 100%
JOINT EFFICIENCY		SHELL: 1.0	1.0
IMPACT TESTING	EXEMPTED, AS PER UCS-66(b)(3)	FABRICATED WEIGHT	: ~38500 Kg.
OTHER LOADINGS	YES AS PER UG-22(a), (b), (c), (d), (2), (f)	WEIGHT (EMPTY)	: ~38500 Kg.
INSULATION / FIRE PROOFING	NO	OPERATION WEIGHT	: ~90000 Kg.
DENSITY OF FLUID	(Kg/M³) 600-1000 (max)	TEST WEIGHT	: ~107000 Kg.
MDMT @ MAWP	(°C)@(Kg/cm²) 12.5 @ 5	SPECIAL SERVICE	: SUPPLEMENTARY-A
NB CODE STAMP REQUIRED	☐ YES ☒ NO	CYCLIC SERVICE	: NO
ASME CERTIFICATION MARK 02	YES, U STAMP	VESSEL SL.NO.	: **26675**
CODE: ASME SEC. VIII DIV -1 : ED-2019		CONSIGNMENT SIZE	: ODC/~~ORDINARY~~
NOZZLE LOAD DATA	APPLICABLE	POSITION OF VESSEL	: HORIZONTAL
WIND SPECIFICATION :	NOT APPLICABLE	HYDROTEST POSITION	: HORIZONTAL IN SHOP
EARTHQUAKE SPECIFICATION : IS 1893 (PART 4)-2015 & SITE SPECTRA		INSPECTION: M/s.TUV, AUTHORISED INSPECTION M/s.BV 02	
EQUIPMENT CATEGORY : 1, SOIL TYPE : SOFT		STAGE WISE & THIRD PARTY INSPCTION : YES	
SEISMIC ZONE : III, IMPORTANCE FACTOR : 2		NATIONAL BOARD REGISTRATION : NOT REQUIRED	
POST WELD HEAT TREATMENT	YES, (REFER HEAT TREATMENT TABLE BELOW)		
POST FORMING HEAT TREATMENT 02	NOT REQUIRED, AS PER 4.3.1. (C) OF 6-12-0002	FOR COLD FORMED HEADS	
LOCATION OF INSTALLATION	M/s.HPCL-VISAKHAPATNAM, AP, INDIA.		
COIL DESIGN PRESSURE	((N02L5 & 6) INT./EXT.) (Kg/cm²g)	8 / 5	
COIL DESIGN TEMPERATURE	((N02L5 & 6) INT./EXT.) 02 (°C)	190/260	
COIL DEGREE OF RADIAOGRAPHY		100%	
COIL JOINT EFFICIENCY : 1.0		COIL HYDROTEST PRESSURE : 26.10 (Kg/cm²g)	

MATERIAL OF CONSTRUCTION

SL.NO.	DESCRIPTION	MATERIAL REFERENCE	MATERIAL SPECIFICATION
01	SHELL / BOOT SHELL	CARBON STEEL	SA 516 GR.70
02	HEADS / BOOT HEADS	CARBON STEEL	SA 516 GR.70
03	SUPPORT	CARBON STEEL	SA 516 GR.70
04	NOZZLE FLANGE	FORGED (CARBON STEEL)	SA 105
05	NOZZLE NECK	CARBON STEEL (FORGED CARBON STEEL)	SA 106 GR.B / SA 516 GR.70/SA 105
06	GASKET (EXTERNAL)	STAINLESS STEEL	SS 316 SPIRAL WOUND GRAFIL FILLED WITH SS 316 INNER RING & C.S. OUTER RING
07	GASKET (INTERNAL)	ALLOY STEEL	CNAF
08	BOLT & NUT (EXTERNAL)	CARBON STEEL	SA 193 GR.B7 / SA 194 GR.2H
09	BOLT & NUT (INTERNAL)	STAINLESS STEEL	SS 304
10	INTERNAL	CARBON STEEL	SA 516 GR.70 / SA 106 GR.B
11	EXTERNAL ATTACHMENT	CARBON STEEL	SA 516 GR.70
12	PIPE FITTINGS	CARBON STEEL	SA 234 GR.WPB
13	EARTHING LUG	STAINLESS STEEL	SA 240 TP 304
14	LIFTING LUG	CARBON STEEL	SA 516 GR.70
15	ANCHOR BOLT	CARBON STEEL	IS 2062 GR.E250 BO/BR
16	CATHODIC PROTECTION CLIP	CARBON STEEL	SA 516 GR.70

REFERENCE DRAWING LIST

BHEL DOCUMENT NUMBER	CLIENT DOCUMENT NUMBER	DRAWING TITLE
1-PV-160-U0116	B016-RUF-LT-504-MS-FD-BHEL(1)-02552	ASSEMBLY DETAILS OF CLOSED BLOWDOWN DRUM-1 (504-V-803)
0-PV-160-U0018	B016-RUF-LT-504-MS-FD-BHEL(1)-02554	SHELL DEVELOPMENT OF CLOSED BLOWDOWN DRUM-1 (504-V-803)
3-PV-160-U0182	B016-RUF-LT-504-MS-FD-BHEL(1)-02555	DETAILS OF MANWAY DAVIT FOR CLOSED BLOWDOWN DRUM-1 (504-V-803)
3-PV-160-U0180	B016-RUF-LT-504-MS-FD-BHEL(1)-02557	NAME PLATE DETAILS FOR CLOSED BLOWDOWN DRUM-1 (504-V-803)
3-PV-160-U0179	B016-RUF-LT-504-MS-FD-BHEL(1)-02558	GENERAL NOTES FOR CLOSED BLOWDOWN DRUM-1 (504-V-803)
2-PV-160-U0045	B016-RUF-LT-504-MS-DW-BHEL(1)-02559	TRANSPORTATION ARRANGEMENT DETAILS FOR CLOSED BLOWDOWN DRUM-1 (504-V-803)
4-PV-160-U0052	B016-RUF-LT-504-MS-LS-BHEL(1)-03024	SCHEDULE OF MANDATORY SPARES & COMMISSIONING SPARES (504-V-803)
PPPV-2438-PV-160-001	B016-RUF-LT-504-MS-CL-BHEL(1)-02551	MECHNICAL DESIGN OF CLOSED BLOWDOWN DRUM-1 (504-V-803)

LIST OF HOLDS

1. PUMP NOZZLE LOAD+MOMENT FOR 12C/D

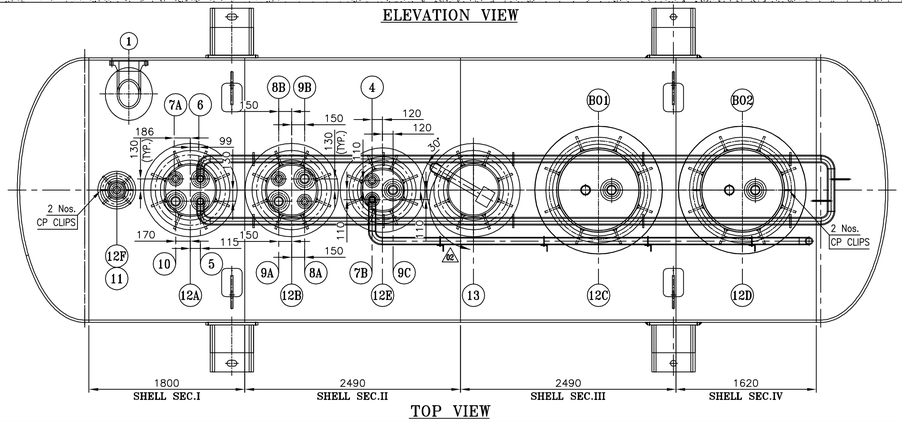

TOP VIEW

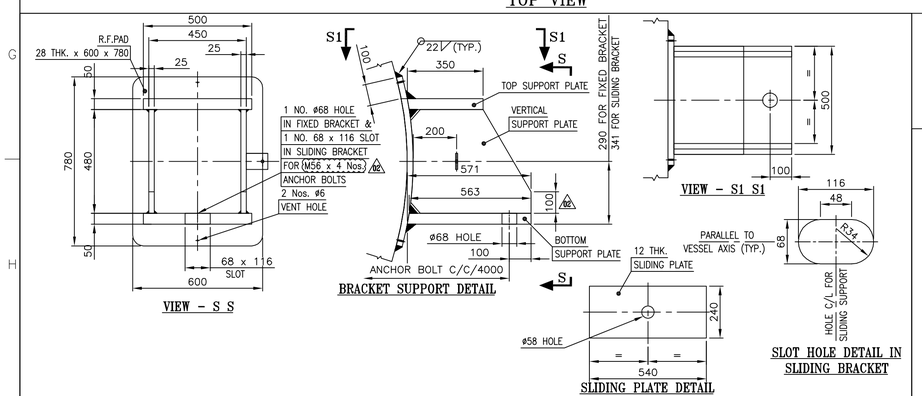

HEAT TREATMENT CYCLE

Part	Procedure	Loading Temperature (°C)	Holding Temperature (°C)	Heating Rate (°C/hr)	Holding Time (min)	Cooling Rate °C/hr	Remarks
BLIND FLG. ASSLY	PWHT	<425	630±10	110	165	140	Unloading at 425°C
COMPLETE EQUIPMENT	PWHT	<425	630±10	110	70	140	Unloading at 425°C

APPLICABLE STANDARDS :

1. ASME BOILER & PRESSURE VESSEL CODE SEC VIII DIV 1 : ED-2019
2. ASME BOILER & PRESSURE VESSEL CODE SEC II PART A, C & D : ED-2019
3. ASME BOILER & PRESSURE VESSEL CODE SEC V : ED-2019
4. ASME BOILER & PRESSURE VESSEL CODE SEC IX ED-2019
5. ASME B16.5 ED-2013-STANDARD FOR PIPE FLANGES AND FLANGED FITTINGS.
6. ASME B16.11 ED-2016 FORGED STEEL FITTINGS, SOCKET WELDED & THREADED
7. ASME B36.10M ED-2018 WELDED AND SEAMLESS WROUGHT STEEL PIPE
8. ASME B16.20 ED2013 METALLIC FLAT GASKET FOR PIPE FLANGES
9. ASME B16.21 ED2011 NON METALLIC FLAT GASKET FOR PIPE FLANGES

WELD JOINT TOLERANCES TABLE - 1

Sl.No.	TOLERANCE APPLICABLE	TOLERANCE
01.	BEVEL ANGLE / INCLUDING ANGLE	
	a). > 35°	± 5°
	b). 20° – 35°	± 2°
	c). < 20°	± 1°
02.	ROOT GAP	
	a). ≤ 3	± 1
	b). 1 < ROOT GAP < 3	± 0.5
	c). ≤ 1	+ 0.5 −0.0

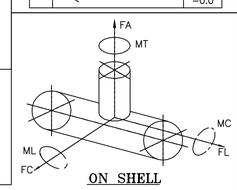

ON SHELL

4	2	200	200	200	50	40	30
5, 6	3	300	300	300	112	90	67
10	4	400	400	400	200	160	120
12E	20	2000	2000	2000	5000	4000	3000
12D	38	3800	3800	3800	18050	14440	10830
12C	38	3800	3800	3800	18050	14440	10830
12B	24	2400	2400	2400	7200	5760	4320
12A	24	2400	2400	2400	7200	5760	4320
1	10	1000	1000	1000	1250	1000	750
Nozzle Mark	NPS	FA (kgf)	FL (kgf)	FC (kgf)	MT (kgf-m)	ML (kgf-m)	MC (kgf-m)

Max. Nozzle Load

MARK NO.	QTY.	SERVICE	NB (N.P.S.)	O.D.	SCH. THK.	RATING CLASS	TYPE/ FACE	PROJECTION	R.F. PAD W x THK.	REMARKS
B01-2	2	BOOT FOR PUMP NOZZLE	I.D.936	–	– 20	–	–	SEE DRG.	250 x 32	
13	1	MANWAY+B.F.+DAVIT	600 (24")	610.0	40 –	300	WN/RF	SEE DRG.	235 x 28	
12F	1	VENTILATION+B.F	200 (8")	219.1	100 –	300	WN/RF	SEE DRG.	110 x 28	
12E	1	HOUSING NOZZLE FOR NOZLS.4, 7B & 9C	500 (20")	508.0	60 –	300	WN/RF	SEE DRG.	165 x 32	(WITH BLIND)
12C-D	2	PUMP NOZZLE	950 (38")	I.D. 931.6	– 20	300	WN/RF	SEE DRG.	250 x 32	AS PER 16.47 SERIES-B
12B	1	HOUSING NOZZLE FOR NOZLS.8A/B & 9A/B	600 (24")	610.0	40 –	300	WN/RF	SEE DRG.	235 x 28	(WITH BLIND)
12A	1	HOUSING NOZZLE FOR NOZLS.5, 6. 7A & 10	600 (24")	610.0	40 –	300	WN/RF	SEE DRG.	235 x 28	(WITH BLIND)
11	1	VENT	50 (2")	84.0	– 16.6	300	SRLWN/RF	SEE DRG.	–	I.D.50.8
10	1	LP FLARE	100 (4")	114.3	160 –	300	SRWN/RF	SEE DRG.	–	
9A-C	3	LEVEL TAPS RADAR (NON CONTACT TYPE)	100 (4")	114.3	160 –	300	SRWN/RF	SEE DRG.	–	I.D.87.2 (WITH PIPE)
8A/B	2	PRESSURE TAPS	50 (2")	84.0	– 16.6	300	SRLWN/RF	SEE DRG.	–	I.D.50.8
7A/B	2	TEMPERATURE TAPS	50 (2")	84.0	– 16.6	300	SRLWN/RF	SEE DRG.	–	I.D.50.8 (WITH PIPE)
6	1	BEARING COOLING WATER RETURN	80 (3")	88.9	160 –	300	SRWN/RF	SEE DRG.	–	
5	1	BEARING COOLING WATER SUPPLY	80 (3")	88.9	160 –	300	SRWN/RF	SEE DRG.	–	
4	1	STEAM OUT/FG	50 (2")	84.0	– 16.6	300	SRLWN/RF	SEE DRG.	–	(WITH PIPE)
1	1	FEED INLET	250 (10")	273.1	120	300	WN/RF	SEE DRG.	135 x 28	

TABLE OF NOZZLES 02

ASME CERTIFICATION MARK WITH U-DESIGNATOR

L&T - CHIYODA LIMITED

☐ REVIEW CODE 1 – NO COMMENTS PROCEED WITH MANUFACTURE / FABRICATION/ CONSTRUCTION AS PER THE DOCUMENT.
☐ REVIEW CODE 2 – PROCEED WITH MANUFACTURE/ FABRICATION /CONSTRUCTION AS PER THE COMMENTED DOCUMENT. REVISED DOCUMENT REQUIRED.
☐ REVIEW CODE 3 – DOCUMENT DOES NOT CONFORM TO BASIC REQUIREMENTS AS MARKED. RESUBMIT FOR REVIEW.
☐ R – DOCUMENT IS RETAINED FOR RECORDS. PROCEED WITH MANUFACTURE / FABRICATION
☐ V-VOID

COMMENTED BY	REVIEWED BY	APPROVED BY	DATE

THIS REVIEW / APPROVAL DOES NOT RELIEVE THE VENDOR / MANUFACTURER OF THE FULL RESPONSIBILITY AS TO DESIGN CORRECTNESS OF DIMENSIONS & COMPLIANCE WITHALL APPLICABLE REGULATIONS AND WITH THE REQUIREMENTS MADE IN PURCHASER SPECIFICATIONS.

DRG. CATEGORY: (USE TICK MARK) R I
EIL REVIEW/APPROVAL CODE:
VPTL NO.:
SCH. DATE OF SUBMISSION
DOCUMENT STATUS
STATEMENT OF SUB: 1st 2nd 3rd
☐ FINAL FOR CODE-1 ☐ AS BUILT
ISSUED FOR
☐ AS BUILT ☐ INFORMATION
☐ CONSTRUCTION ☐ REVIEW
SIGN: DATE:

☐ REVIEW CODE 1 – NO COMMENTS PROCEED WITH MANUFACTURE / FABRICATION/ CONSTRUCTION AS PER THE DOCUMENT.
☐ REVIEW CODE 2 – PROCEED WITH MANUFACTURE / FABRICATION / CONSTRUCTION AS PER THE COMMENTED DOCUMENT. REVISED DOCUMENT REQUIRED.
☐ REVIEW CODE 3 – DOCUMENT DOES NOT CONFORM TO BASIC REQUIREMENTS AS MARKED. RESUBMIT FOR REVIEW.
☐ R – DOCUMENT IS RETAINED FOR RECORDS. PROCEED WITH MANUFACTURE / FABRICATION
☐ V-VOID

NAME	DICIPLINE	SIGN.	DATE

REV.	DESCRIPTION	DRN	CHECKED	APPROVED	REVIEWED	APPROVED	DATE
02	COMMENTS UPDATED.	NPR	SATISH	SATISH	---	---	15.02.21
01	W/A.THE COMMENTS INCORPORATED	NPR	SATISH	SATISH	---	---	04.01.21
00	ISSUED FOR SUBMISSION	RPK	SATISH	PKS	---	---	09.06.20

OWNER: HINDUSTAN PETROLEUM CORPORATION LIMITED
VISAKH REFINERY MODERNIZATION PROJECT
EPCC-03 PACKAGE FOR RESIDUE UP-GRADATION FACILITY (RUF)

PMC: इंजीनियर्स इंडिया लिमिटेड (भारत सरकार का उद्यम) ENGINEERS INDIA LIMITED (A Govt. of India Undertaking)

LSTK CONTRACTOR: L&T Hydrocarbon Engineering

DETAILED ENGINEERING CENTER: L&T - CHIYODA LIMITED

VENDOR: Bharat Heavy Electricals Limited
UNIT: HEAVY PLATES & VESSELS PLANT
VISAKHAPATNAM-530012

VENDOR PO NO: REFINERY/75000-66912/NG DT:18.03.2020
VENDOR DWG. NO: 1-PV-160-U0115, REV-02

DATE 23.11.2020 | SCALE 1 : 35 | TITLE: GENERAL ASSEMBLY OF CLOSED BLOWDOWN DRUM-1 (ITEM NO.504-V-803)

DEPT: HT ENGG.
DRN BY: N.PRAKASH
CHK BY: D.SATISH
APP BY: D.SATISH
PROJECT:
PWO NO.:
DRG. NO.: B016-RUF-LT-504-MS-GA-BHEL(1)-02551
SH. 01 of 01
REV. 02
CAD REVISE THIS DRG. USING CAD SYSTEM ONLY FILE:

BHEL DRG. No. 1-PV-200-U0125

DWG. NO. B016-RUF-LT-504-MS-GA-BHEL(1)-02751

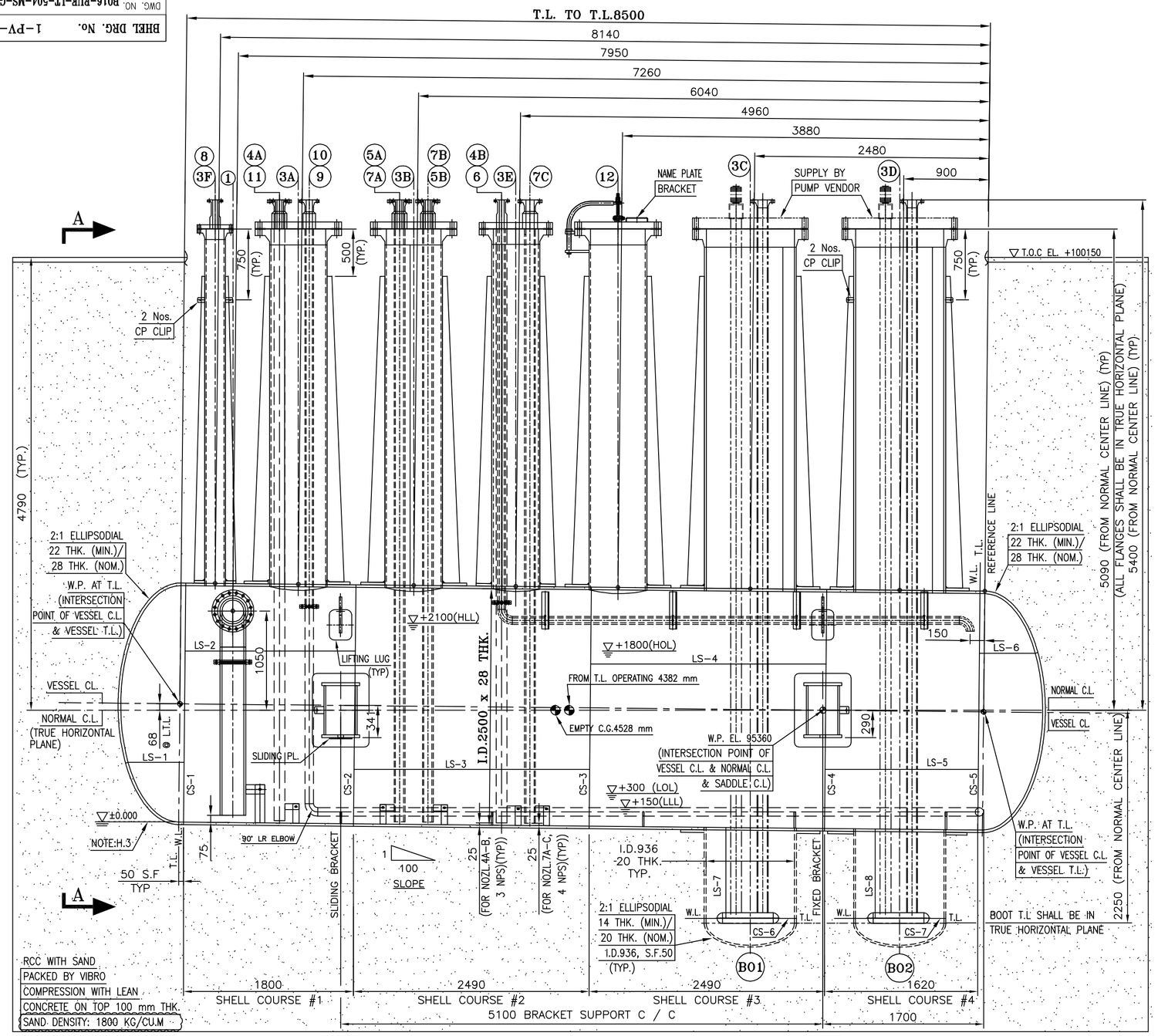

ELEVATION VIEW

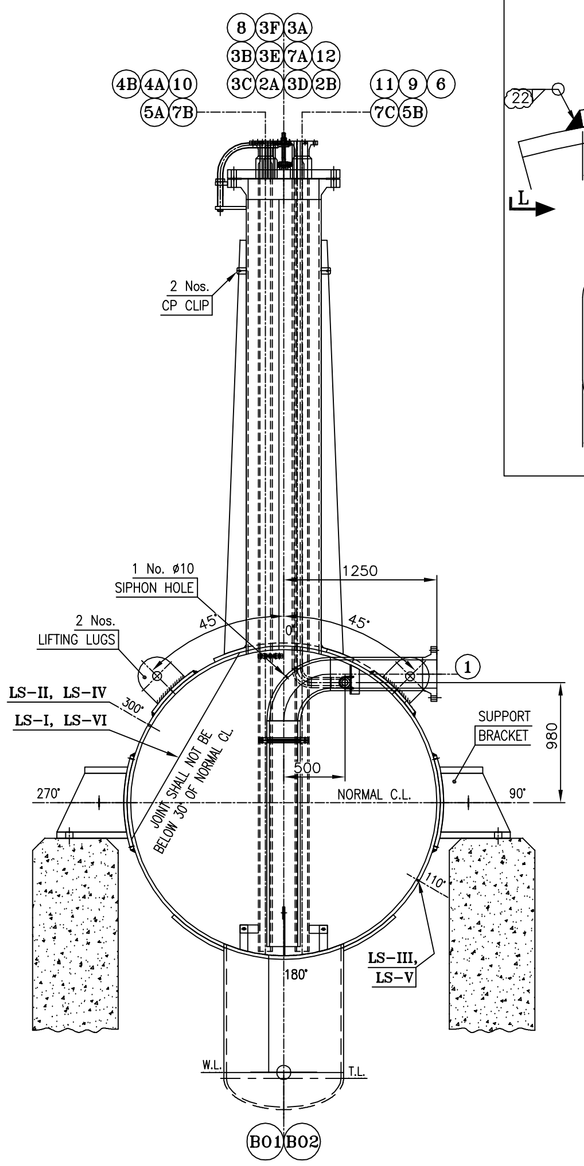

VIEW FROM A-A

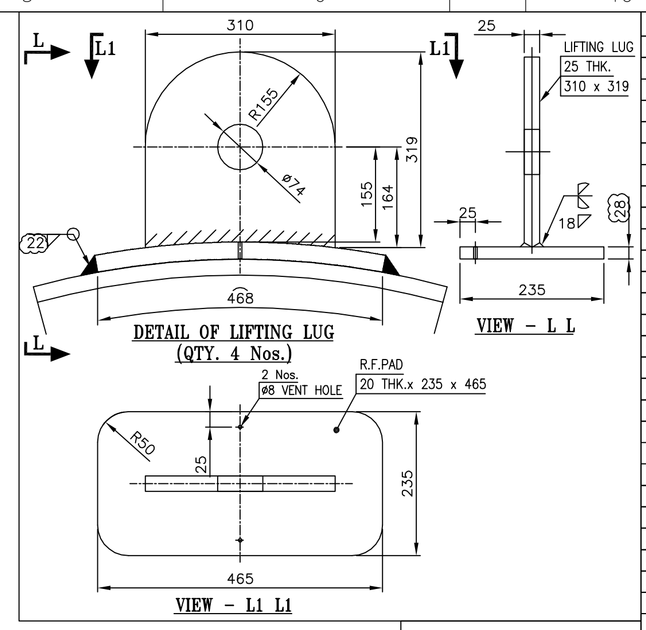

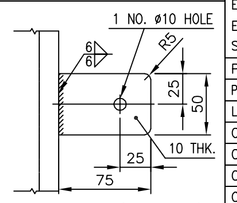

CP CLIPS (4 Nos.) (DO NOT PAINT)

DESIGN DATA

SERVICE			
DESIGN PRESSURE INT/EXT – MPa	(Kg/cm²g)	0.49 (5) / 0.193 (1.97) @ HEIGHT POINT	
MAXIMUM ALLOWABLE WORKING PRESSURE MPa	(Kg/cm²g)	0.49 (5)	
MAXIMUM ALLOWABLE PRESSURE MPa	(Kg/cm²g)	1.461 (14.9) (LIMITED BY D'END)	
MAXIMUM ALLOWABLE EXT. WORKING PRESSURE MPa	(Kg/cm²g)	0.212 (2.16)	
MAXIMUM ALLOWABLE CORROSION ALLOWANCE	(MM)	9	
DESIGN TEMPERATURE INT./EXT.	(°C)	260	
OPERATING PRESSURE MPa	(Kg/cm²g)	0.147 (1.5)	
OPERATING TEMPERATURE	(°C)	40–180	
STEAM OUT CONDITON MPa	(Kg/cm²g)	0.049 (0.5) @ 170°C	
LOWEST ALLOWABLE MDMT & COINCIDENT MAX. PRESSURE		–48 °C @ 5 (Kg/cm²g)	
HYD.TEST PRESSURE AS PER UG–99(c) MPa	(Kg/cm²g)	3.09 (31.49) AT SHOP	
HYD.TEST PRESSURE AS PER UG–99(b) MPa	(Kg/cm²g)	0.64 (6.5) AT SITE	
CORROSION ALLOWANCE(MM)	SHELL, HEADS (INT./EXT.)–3/3 | REMOVABLE INTERNAL, BRACKET SUPPORT–3 | PERMANENT INTERNAL–6		
CAPACITY	M³	46.961	CLAD (mm) | NIL
RADIOGRAPHY:		SHELL: 100%	HEAD: 100%
JOINT EFFICIENCY		SHELL: 1.0	HEAD: 1.0
IMPACT TESTING	EXEMPTED, AS PER UCS–66(b)(3)	FABRICATED WEIGHT	: ~35,800 Kg.
OTHER LOADINGS	YES AS PER UG–22(a), (b), (c), (d), (2), (f)	EMPTY WEIGHT	: ~35,800 Kg.
INSULATION / FIRE PROOFING	NO	OPERATION WEIGHT	: ~88,800 Kg.
DENSITY OF FLUID	(Kg/M³) 600–1000	TEST WEIGHT	: ~82,000 Kg.
MDMT @ MAWP	(°C)@ (Kg/cm²) 12.5 @5	SPECIAL SERVICE	: SUPPLEMENTARY–A
NB CODE STAMP REQUIRED	☐ YES ☒ NO	CYCLIC SERVICE	: NO
ASME CERTIFICATION MARK	YES, U STAMP	VESSEL SL.NO.	: **26679**
CODE: ASME SEC. VIII DIV –1 : ED–2019		CONSIGNMENT SIZE	: ODC/~~ORDINARY~~
NOZZLE LOAD DATA	APPLICABLE	POSITION OF VESSEL	: HORIZONTAL
WIND SPECIFICATION :	NOT APPLICABLE	HYDROTEST POSITION	: HORIZONTAL IN SHOP
EARTHQUAKE SPECIFICATION : IS 1893 (PART 4)–2015 & SITE SPECTRA		INSPECTION: M/s TUV, AUTHORISED INSPECTION: M/s BV	
EQUIPMENT CATEGORY : 1, SOIL TYPE : SOFT		STAGE WISE & THIRD PARTY INSPCTION : YES	
SEISMIC ZONE : III, IMPORTANCE FACTOR : 2		NATIONAL BOARD REGISTRATION : NOT REQUIRED	
POST WELD HEAT TREATMENT	YES, (REFER HEAT TREATMENT TABLE BELOW)		
POST FORMING HEAT TREATMENT	NOT REQUIRED, AS PER 4.3.1 (C) OF 6–12–0002		
LOCATION OF INSTALLATION	M/s.HPCL–VISAKHAPATNAM, AP, INDIA.		
COIL DESIGN PRESSURE ((NOZL9 & 10) INT./EXT.)	(Kg/cm²g) 8 / 5		
COIL DESIGN TEMPERATURE ((NOZL9 & 10) INT./EXT.)	(°C) 245/260		
COIL DEGREE OF RADIAOGRAPHY		100%	
COIL JOINT EFFICIENCY : 1.0		COIL HYDROTEST PRESSURE: 31.49	(Kg/cm²g)

WELD JOINT TOLERANCES TABLE – 1

Sl.No.	TOLERANCE APPLICABLE	TOLERANCE
01.	BEVEL ANGLE / INCLUDING ANGLE	
	a). > 35°	± 5°
	b). 20° – 35°	± 2°
	c). < 20°	± 1°
02.	ROOT GAP	
	a). ≤ 3	± 1
	b). 1 < ROOT GAP < 3	± 0.5
	c). ≤ 1	+ 0.5 –0.0

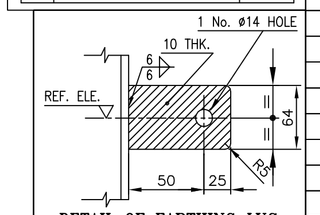

DETAIL OF EARTHING LUG
NOTE:–DO NOT PAINT THE EARTHING LUGS

MATERIAL OF CONSTRUCTION

SL.NO.	DESCRIPTION	MATERIAL REFERENCE	MATERIAL SPECIFICATION
01	SHELL / BOOT SHELL	CARBON STEEL	SA 516 GR.70
02	HEADS / BOOT HEADS	CARBON STEEL	SA 516 GR.70
03	SUPPORT	CARBON STEEL	SA 516 GR.70
04	NOZZLE FLANGE	FORGED (CARBON STEEL)	SA 105
05	NOZZLE NECK	CARBON STEEL (FORGED CARBON STEEL)	SA 106 GR.B / SA 516 GR.70/SA 105
06	GASKET (EXTERNAL)	STAINLESS STEEL	SS 316 SPIRAL WOUND GRAFIL FILLED WITH SS 316 INNER RING & C.S. OUTER RING
07	GASKET (INTERNAL)	–	CNAF
08	BOLT & NUT (EXTERNAL)	CARBON STEEL	SA 193 GR.B7 / SA 194 GR.2H
09	BOLT & NUT (INTERNAL)	STAINLESS STEEL	SS 304
10	INTERNAL	CARBON STEEL	SA 516 GR.70 / SA 106 GR.B
11	EXTERNAL ATTACHMENT	CARBON STEEL	SA 516 GR.70
12	PIPE FITTINGS	CARBON STEEL	SA 234 GR.WPB
13	EARTHING LUG	AUSTENITIC STEEL	SA 240 TP 304
14	LIFTING LUG	CARBON STEEL	SA 516 GR.70
15	ANCHOR BOLT	CARBON STEEL	IS 2062 GR.E250 BO/BR
16	CATHODIC PROTECTION CLIP	CARBON STEEL	SA 516 GR.70

REFERENCE DRAWING LIST

BHEL DOCUMENT NUMBER	CLIENT DOCUMENT NUMBER	DRAWING TITLE
1–PV–200–U0126	B016–RUF–LT–504–MS–FD–BHEL(1)–02752	ASSEMBLY DETAILS OF CLOSED BLOWDOWN DRUM–2 (504–V–809)
0–PV–200–U0023	B016–RUF–LT–504–MS–FD–BHEL(1)–02754	SHELL DEVELOPMENT OF CLOSED BLOWDOWN DRUM–2 (504–V–809)
3–PV–200–U0195	B016–RUF–LT–504–MS–FD–BHEL(1)–02755	DETAILS OF MANWAY DAVIT FOR CLOSED BLOWDOWN DRUM–2 (504–V–809)
3–PV–200–U0197	B016–RUF–LT–504–MS–FD–BHEL(1)–02757	NAME PLATE DETAILS FOR CLOSED BLOWDOWN DRUM–2 (504–V–809)
3–PV–200–U0198	B016–RUF–LT–504–MS–FD–BHEL(1)–02758	GENERAL NOTES FOR CLOSED BLOWDOWN DRUM–2 (504–V–809)
2–PV–200–U0050	B016–RUF–LT–504–MS–DW–BHEL(1)–02759	TRANSPORTATION ARRANGEMENT DETAILS FOR CLOSED BLOWDOWN DRUM–2 (504–V–809)
4–PV–200–U0052	B016–RUF–LT–504–MS–LS–BHEL(1)–03028	SCHEDULE OF MANDATORY SPARES & COMMISSIONING SPARES (504–V–809)
PPPV–2438–PV–200–001	B016–RUF–LT–504–MS–CL–BHEL(1)–02751	MECHANICAL DESIGN OF CLOSED BLOWDOWN DRUM–2 (504–V–809)

APPLICABLE STANDARDS :

1. ASME BOILER & PRESSURE VESSEL CODE SEC VIII DIV 1 : ED–2019
2. ASME BOILER & PRESSURE VESSEL CODE SEC II PART A, C & D : ED–2019
3. ASME BOILER & PRESSURE VESSEL CODE SEC V : ED–2019
4. ASME BOILER & PRESSURE VESSEL CODE SEC IX ED–2019
5. ASME B16.5 ED–2013–STANDARD FOR PIPE FLANGES AND FLANGED FITTINGS.
6. ASME B16.11 ED–2016 FORGED STEEL FITTINGS, SOCKET WELDED & THREADED
7. ASME B36.10M ED–2018 WELDED AND SEAMLESS WROUGHT STEEL PIPE
8. ASME B16.20 ED2013 METALLIC FLAT GASKET FOR PIPE FLANGES
9. ASME B16.21 ED2011 NON METALLIC FLAT GASKET FOR PIPE FLANGES

LIST OF HOLDS

1. NOZZLE 3C/3D/LOAD+MOMENT

HEAT TREATMENT CYCLE

Part	Procedure	Loading Temperature (°C)	Holding Temperature (°C)	(min.)	Heating (Max.) Rate (°C/hr)	Holding Time (min)	Cooling (Max.) Rate (°C/hr	Remarks
COMPLETE EQUIPMENT	PWHT	<425	610±10		110	70	140	Unloading at 425°C
BLIND FLANGE ASSLY.	PWHT	<425	630±10		110	168	140	Unloading at 425°C

MARK NO.	QTY.	SERVICE	NB (N.P.S.)	O.D.	SCH. THK.	RATING CLASS	TYPE/ FACE	PROJECTION	R.F. PAD W x THK.	REMARKS
B01–2	2	BOOT FOR PUMP NOZZLE	I.D.936	–	– / 20	–	–	SEE DRG.	255 x 32	
12	1	MANWAY+B.F.+DAVIT	600 (24")	610	40 / 17.48	300	WN/RF	SEE DRG.	255 x 28	
11	1	LP FLARE	100 (4")	114.3	160 / 13.48	300	SRWN/RF	SEE DRG.	–	
10	1	BEARING COOLING WATER RETURN/CONDENSATE	80 (3")	88.9	160 / 11.13	300	SRWN/RF	SEE DRG.	–	
9	1	BEARING COOLING WATER SUPPLY/LP STEEM	80 (3")	88.9	160 / 11.13	300	SRWN/RF	SEE DRG.	–	
8	1	VENT	50 (2")	84.0	– / 16.6	300	SRLWN/RF	SEE DRG.	–	
7A–C	3	LEVEL TAPS (GWR)	100 (4")	114.3	160 / 13.48	300	SRWN/RF	SEE DRG.	–	I.D.87.32 (WITH PIPE)
6	1	STEAM OUT/FG	50 (2")	84.0	– / 16.6	300	SRLWN/RF	SEE DRG.	–	I.D.50.8
5A/B	2	PRESSURE TAPS	50 (2")	84.0	– / 16.6	300	SRLWN/RF	SEE DRG.	–	I.D.50.8
4A/B	2	TEMPERATURE TAPS	50 (2")	84.0	– / 16.6	300	SRLWN/RF	SEE DRG.	–	(WITH PIPE)
3F	1	VENTILATION + B.F.	200 (8")	219.1	120 / 18.26	300	WN/RF	SEE DRG.	110 x 28	WITH BLIND
3E	1	HOUSING NOZZLE FOR NOZLS.4B, 6 & 7C	500 (20")	508.0	60 / 20.62	300	WN/RF	SEE DRG.	165 x 28	WITH BLIND
3C–D	2	PUMP NOZZLE	950 (38")	I.D. 931.6	– / 20	300	WN/RF	SEE DRG.	255 x 32	(B16.47, SERIES–B)
3B	1	HOUSING NOZZLE FOR NOZLS.5A/B & 7A/B	600 (24")	610	– / 20	300	WN/RF	SEE DRG.	255 x 32	WITH BLIND
3A	1	HOUSING NOZZLE FOR NOZLS.4A, 9, 10 & 11	600 (24")	610	– / 20	300	WN/RF	SEE DRG.	255 x 32	WITH BLIND
1	1	FEED INLET	250 (10")	273.1	120 / 21.44	300	WN/RF	SEE DRG.	135 x 28	

TABLE OF NOZZLES

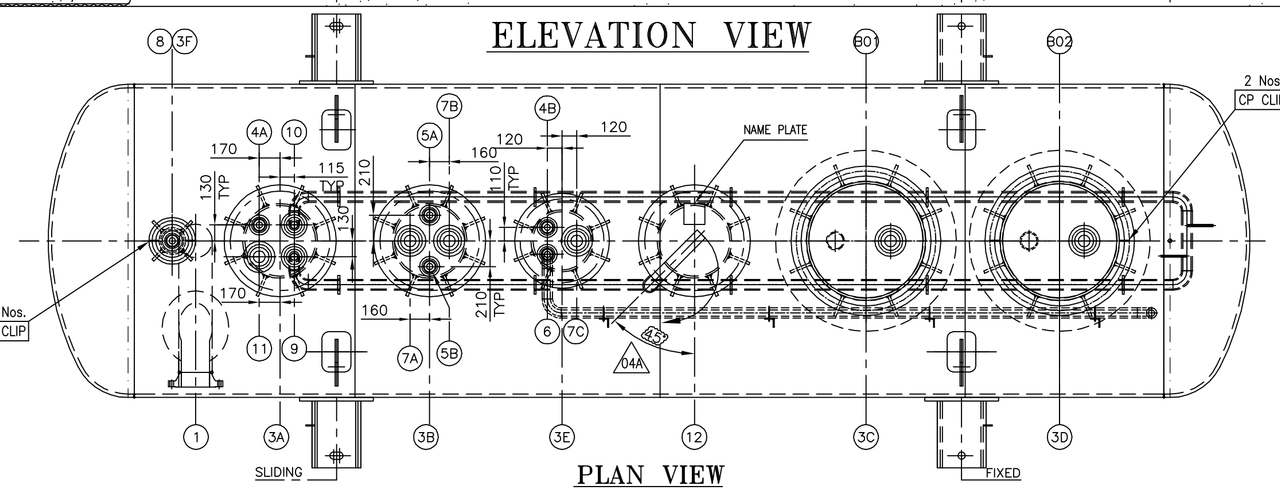

PLAN VIEW

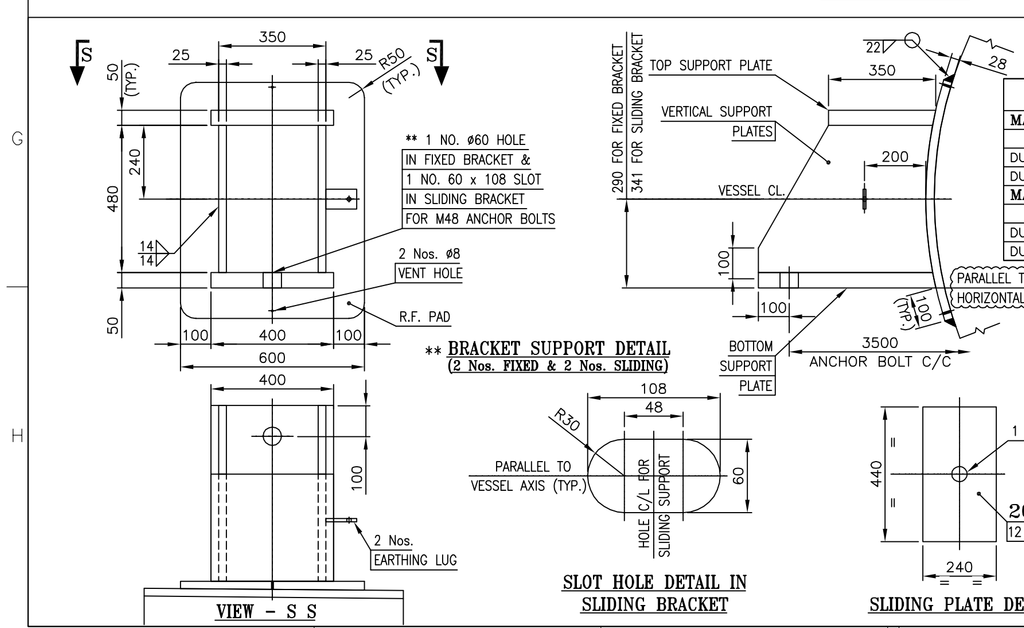

LOAD DATA

MAX. SHEAR AT BASE (KG)	EMPTY	IN OPERATION
DUE TO SEISMIC		14688.6
DUE TO WIND		–
MAX. MOMENT AT BASE (KG–M)	EMPTY	IN OPERATION
DUE TO SEISMIC		5008.8
DUE TO SEISMIC		–

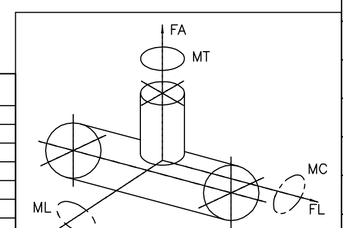

ON SHELL

Nozzle Mark	NPS	FA (kgf)	FL (kgf)	FC (kgf)	MT (kgf–m)	ML (kgf–m)	MC (kgf–m)
9, 10	3	300	300	300	112	90	67
6	2	200	200	200	50	40	30
11	4	400	400	400	200	160	120
3E	20	2000	2000	2000	5000	4000	3000
3D	38	3800	3800	3800	18050	14440	10830
3C	38	3800	3800	3800	18050	14440	10830
3B	24	2400	2400	2400	7200	5760	4320
3A	24	2400	2400	2400	7200	5760	4320
1	10	1000	1000	1000	1250	1000	750

Max. Nozzle Load

ASME CERTIFICATION MARK WITH U–DESIGNATOR

L&T - CHIYODA LIMITED

☐ REVIEW CODE 1 – NO COMMENTS PROCEED WITH MANUFACTURE / FABRICATION/ CONSTRUCTION AS PER THE DOCUMENT.
☐ REVIEW CODE 2 – PROCEED WITH MANUFACTURE/ FABRICATION /CONSTRUCTION AS PER THE COMMENTED DOCUMENT. REVISED DOCUMENT REQUIRED.
☐ REVIEW CODE 3 – DOCUMENT DOES NOT CONFORM TO BASIC REQUIREMENTS AS MARKED. RESUBMIT FOR REVIEW.
☐ R – DOCUMENT IS RETAINED FOR RECORDS. PROCEED WITH MANUFACTURE / FABRICATION
☐ V–VOID

COMMENTED BY	REVIEWED BY	APPROVED BY	DATE

THIS REVIEW / APPROVAL DOES NOT RELIEVE THE VENDOR / MANUFACTURER OF THE FULL RESPONSIBILITY AS TO DESIGN CORRECTNESS OF DIMENSIONS & COMPLIANCE WITHALL APPLICABLE REGULATIONS AND WITH THE REQUIREMENTS MADE IN PURCHASER SPECIFICATIONS.

DRG. CATEGORY: (USE TICK MARK) R I
EIL REVIEW/APPROVAL CODE:
VPTL NO.:
SCH. DATE OF SUBMISSION
DOCUMENT STATUS
STATEMENT OF SUB: 1st 2nd 3rd
☐ FINAL FOR CODE–1 ☐ AS BUILT
ISSUED FOR
☐ AS BUILT ☐ INFORMATION
☐ CONSTRUCTION ☐ REVIEW
☐ REVIEW CODE 1 – NO COMMENTS PROCEED WITH MANUFACTURE / FABRICATION/ CONSTRUCTION AS PER THE DOCUMENT.
☐ REVIEW CODE 2 – PROCEED WITH MANUFACTURE / FABRICATION / CONSTRUCTION AS PER THE COMMENTED DOCUMENT. REVISED DOCUMENT REQUIRED.
☐ REVIEW CODE 3 – DOCUMENT DOES NOT CONFORM TO BASIC REQUIREMENTS AS MARKED. RESUBMIT FOR REVIEW.
☐ R – DOCUMENT IS RETAINED FOR RECORDS. PROCEED WITH MANUFACTURE / FABRICATION
☐ V–VOID
SIGN: DATE:

REV.	DESCRIPTION	DRN	CHECKED	APPROVED	REVIEWED	APPROVED	DATE
04A	COMMENTS INCORPORATED	NPR	SATISH	PKS	---	---	18.05.21
04	COMMENTS INCORPORATED	NPR	SATISH	PKS	---	---	15.02.21
03	M/s.LTHE COMMENTS INCORPORATED	NPR	SATISH	PKS	---	---	22.12.20
01	ISSUED FOR ACTION	RPK	SATISH	PKS	---	---	21.07.20

	NAME	DICIPLINE	SIGN.	DATE

OWNER: HINDUSTAN PETROLEUM CORPORATION LIMITED
VISAKH REFINERY MODERNIZATION PROJECT
EPCC–03 PACKAGE FOR RESIDUE UP–GRADATION FACILITY (RUF)

PMC: इंजीनियर्स इंडिया लिमिटेड (भारत सरकार का उपक्रम) ENGINEERS INDIA LIMITED (A Govt. of India Undertaking)

LSTK CONTRACTOR: L&T Hydrocarbon Engineering

DETAILED ENGINEERING CENTER: **L&T - CHIYODA LIMITED**

VENDOR: Bharat Heavy Electricals Limited
UNIT: HEAVY PLATES & VESSELS PLANT
VISAKHAPATNAM–530012

VENDOR PO NO: REFINERY/75000–66912/NG DT:18.03.2020

VENDOR DWG. NO: 1–PV–200–U0125, REV–04A

DATE	SCALE	TITLE: GENERAL ASSEMBLY OF CLOSED BLOWDOWN DRUM–2 (ITEM NO.504–V–809)
09.06.2020	1 : 35	

DEPT:	HT ENGG.	PROJECT:	DRG. NO.: B016–RUF–LT–504–MS–GA–BHEL(1)–02751	SH. 01 of 01
DRN BY:	RPK	PWO NO.:		REV. 04A
CHK BY:	SATISH			
APP BY:	PKS	CAD	REVISE THIS DRG. USING CAD SYSTEM ONLY	FILE:

ALL RIGHTS RESERVED
THIS DOCUMENT AND ANY DATA AND INFORMATION ARE CONFIDENTIAL AND THE PROPERTY OF L&T HYDROCARBON ENGINEERING, (LTHE) AND THE COPYRIGHT THEREIN IS VESTED IN LTHE NO PART OF THIS DOCUMENT, DATA, OR INFORMATION SHALL BE DISCLOSED TO OTHERS OR REPRODUCED IN ANY MANNER OR USED FOR ANY PURPOSE WHATSOEVER, EXCEPT WITH THE PRIOR WRITTEN PERMISSION OF LTHE.