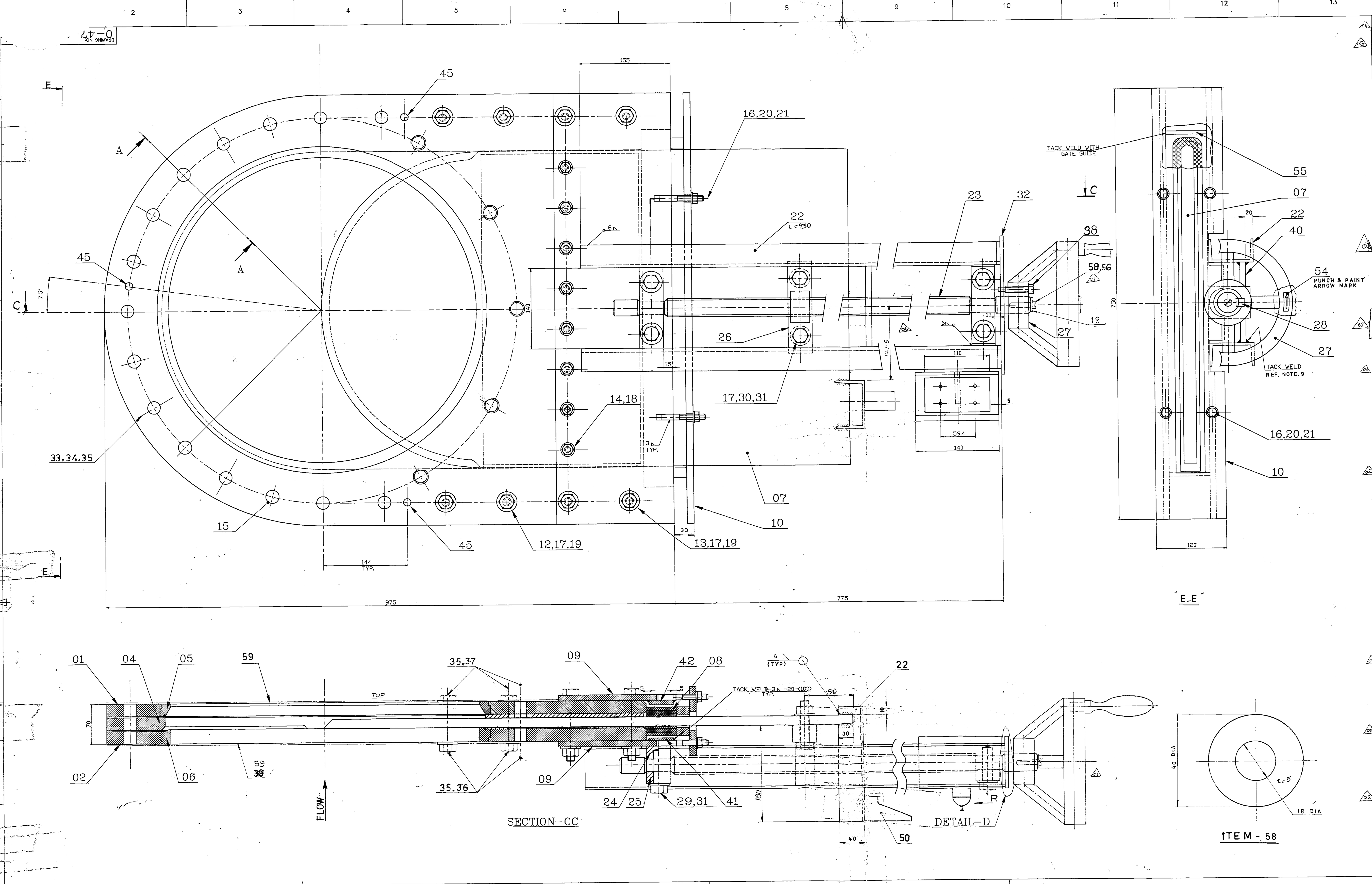

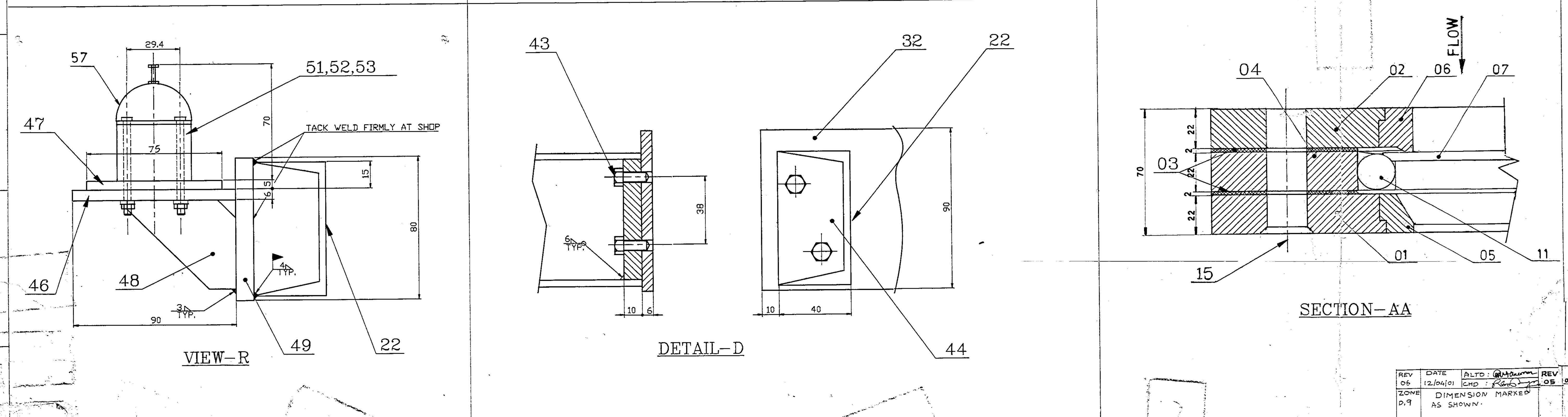

NOTES

1. ITEM NO. 08 HAS TO BE PACKED ON ALL SIDES OF GATE PLATE.
2. HEAD OF ITEM NO.16 SHALL BE REMOVED BEFORE WELDING TO THE PLATE.
3. ITEM NO. 38 IS PROVIDED TO LOCK THE MOVEMENT OF HAND WHEEL/GATE PLATE WHEN IT IS SHUT OFF OR IN FULLY OPEN CONDITION.
4. FREE OPERATION OF GATE AND TIGHT SHUT OFF CONDITION IS TO BE ENSURED.
5. APPLY GREASE ON ITEM NO. 23 FOR FREE OPERATION.
6. APPLY RUST PREVENTIVE COATING IN ALL MACHINED AREA.
7. ITEM NO. 10 GASKET HOLDER IS TIGHTENED WELL AGAINST LGA PACKING.
8. ITEM NOS. 41 & 42 SHOULD BE TACK WELDED WITH ITEM NO. 09 AS SHOWN.
9. LOCATE ARRESTER ITEM NO. 40 AFTER OPENING THE GATE PLATE FULL FROM CLOSED POSITION AND TACK WELD AT FOUR CORNERS.
10. USE TAPERED DOWEL PIN (ITEM NO.45) AT THREE PLACES ON PCD AS SHOWN IN THE DRG. BEFORE TAKING UP THE MATCH DRILLING OF ITEM NOS.01,02,03&04 DESPATCH GATE WITH THESE DOWEL PINS FOR PERFECT REASSEMBLY AFTER DISMANTLING DURING MAINTENANCE.
11. PAINTING:- USE ONE COAT OF RED OXIDE PRIMER. AND 2 COAT OF FRENCH BLUE ENAMEL FOR BODY.
12. ITEM NO 22 SHOULD BE CUT TO THE REQUIRED LENGTH & WELD AS SHOWN.

REV	DATE	ALTERED	DESCRIPTION
07	2/07/07	ALT: KCB. CHD:	ITEM NO: 46 REVISIED. ITEM-33 WAS BPS M20X160
05	05/03/95	ALTERED / CHD & APPD	MATL.SPEC. CHANGED FOR ITEM No. 04,08,09, 12 to 22, 24, 25, 28 to 37, 41 to 46, 48 to 53, 55, 56 AND 58.
04	14/10/94	ALT / CHD	TOTAL WEIGHT ALTERED. ITEM NO 39 DELETED. QTY ALTERED IN ITEM NO 59. WEIGHT & DIMENSION CHANGED IN ITEM NO 07. NOTE 12 ADDED
03	30/8/94	ALTD: G.S.S.R. CHKD	ITEM 58 ALTERED. ITEM 59 added.
02	181093	ALTD / CHD: 26/10	ITEM-57 POSITIONED AT FLOW SIDE. DRG. REVISED AS 02 SHOWN. ITEM.58 ADDED
01	261092	ALTERED: V.V. CHECKED	ITEMS 56 & 57 ADDED. HANDWHEEL MODIFIED. VIEWS UPDATED. ITEM 02. DRG.NO. WAS 3-47-003-00885

ITEM NUMBER	DESCRIPTION	STD	DRAWING NUMBER	ITEM NO / VAR NO	MATERIAL CODE / MATERIAL SPECN	UNIT WEIGHT / QUANTITY
59	GASKET		4-47-003-01520	02	22020-52-500 / CAF GR-W/3	1.100 / 2
58	WASHER PLATE PL.5; D40/D18		0-47-223-00727		15 011 029 / IS 226 Fe410S	0.040 / 1
57	LIMIT SWITCHES		0-47-223-00727		97 053 025 / SUB-DELY.	0.500 / 1
56	HEX HD SCRU M16X5-4.6	S	IS 1363 (P-2)		41222 16025	0.070 / 1
55	PACKER GUIDE		4-47-003-01501		15 011 029 / IS 2062 Fe410 WA	0.086 / 2
54	INDEX'O' 25X40	S	017525-2540		22074 13 100	0.004 / 1
53	HEX NUT M4-8	S	IS 1364 (P-3)		41320 00 004	0.010 / 2
52	MCD WASHER 4.3	S	IS 2016		41406 00 004	0.010 / 2
51	CHS SCRU M4X65-4.8	S	IS 1366		41201 04 065	0.006 / 4
50	CLAMP PLATE PL.32X40X100		4-47-003-01499		15 011 130 / IS 2062 Fe410 WB	0.580 / 1
49	PL.10X80X110		0-47-223-00727		15 011 093 / IS 2062 Fe410 WA	0.690 / 1
48	SUPPORT PLATE PL.10X50X60		4-47-003-01497		15 011 098 / IS 2062 Fe410 WA	0.156 / 1
47	PL.5X75X140		4-47-003-01498		22 020 587 / ASBESTOS	0.112 / 1
46	PL.6X100X90		4-47-003-01496		15 011 092 / IS 2062 Fe410 WA	[illegible] / 1
45	DOWEL PIN		4-47-003-01500		15 004 106 / IS 2062 Fe410 WA	0.110 / 3
44	PL.10X40X75		4-47-003-01494		15 011 098 / IS 2062 Fe410 WA	0.236 / 2
43	HEX HD SCRU M6X16-4.6	S	IS 1363 (P-2)		41222 06 016	0.006 / 4
42	PL.8X40X~~550~~ 600		0-47-223-00727		15 011 027 / IS 2062 Fe410 WA	1.507 ~~1.381~~ / 1
41	PL.4X40X~~550~~ 600		0-47-223-00727		15 011 334 / IS 1079 Fe330	0.754 ~~0.690~~ / 1
40	ARRESTER PL.12X12X140		0-47-223-00727		15 011 132 / IS 2062 Fe410 WA	0.158 / 1
~~39~~	~~GASKET SH.3;D750/D600~~			01	~~22020-52-500~~ / ~~CAF Gr.W/3~~	~~1.000~~ / ~~1~~
38	BOLT M10		4-47-003-01457		15 339 343 / SA 105	0.050 / 1
37	HEX HD SCRU M20X50-8.8	S	IS 1364 (P-2)		41216 20 050	0.151 / 5
36	HEX HD SCRU M20X60-4.6	S	IS 1363 (P-2)		41222 20 060	0.200 / 5
35	SPRING WASHER B12	S	IS 3063		41405 00 020	0.015 / 17
34	HEX NUT M20-4	S	IS 1363 (P-3)		41304 00 020	0.065 / 7
33	~~HEX~~ BOLT M20X175 ~~M20X160-4.6~~	S	4-47-003-01593 ~~IS 1363 (P-1)~~		15 339 280000 / SA105	0.520 ~~0.551~~ / 7
32	LOCKING PLATE PL.6X90X240		4-47-003-01439		15 011 092 / IS 2062 Fe410 WA	0.977 / 1
31	SPRING WASHER M16	S	IS 3063		41405 00 016	0.009 / 6
30	HEX HD BOLT M16X80-4.6	S	IS 1363 (P-1)		41221 16 080	0.155 / 2
29	HEX HD SCRU M16X55-4.6	S	IS 1363 (P-2)		41222 16 055	0.115 / 4
28	KEY PRL RND END 8 X 7 X 40	S	IS 2048		41501 08 040 / IS2048 A	0.020 / 1
27	HAND WHEEL		3-47-003-00706		ASSY.	5.630 / 1
26	GATE NUT		3-47-003-00705		ASSY.	1.997 / 1
25	GATE SCREW SUPPORT UPPER		4-47-003-01437		15 011 184 / IS 2062 Fe410 WB	1.500 / 2
24	GATE SCREW SUPPORT LOWER		4-47-003-01436		15 011 184 / IS 2062 Fe 410 WB	1.600 / 2
23	GATE SCREW ROD D36;L=928		3-47-003-00707	03	15 339 141 / SA 105	5.600 / 1
22	C 75X40;L= 2100		0-47-223-00727		15 010 036 / IS 2062 Fe410 WA	14.994 / 1
21	HEX NUT GR A T425 M10	S	BPS 41319		41319 00 010	0.011 / 4
20	PNCHD WASHER A11	S	IS 2016		41408 00 010	0.004 / 4
19	PNCHD WASHER A18	S	IS 2016		41408 00 016	0.011 / 9
18	SPRING WASHER B12	S	IS 3063		41405 00 012	0.004 / 16 ~~8~~
17	HEX NUT M16-4	S	IS 1363 (P-3)		41304 00 016	0.034 / 14 ~~10~~
16	HEX HD BOLT M10X70-8.8	S	IS 1364 (P-1)		41237 10 070	0.054 / 4
15	CSK SCRU M16X70-4.8	S	IS 1365		41205 16 070	0.118 / 12 ~~8~~
14	HEX HD SCRU M12X30-4.6	S	IS 1363 (P-2)		41222 12 030 / 0.041	0.041 / 16 ~~8~~
13	HEX HD BOLT M16X120-4.6	S	IS 1363 (P-1)		41221 16 120	0.218 / [illegible]
12	HEX HD BOLT M16X100-4.6	S	IS 1363 (P-1)		41221 16 100	[illegible] / 4
11	BALL DIA 20		0-47-223-00727		15 339 343 / SA 105	0.025 / 2
10	GASKET HOLDER		3-47-003-00702	03	WELDT.	8.200 / 1
09	GASKET SHIELD PL.10X200X750		4-47-003-01430	03	15 011 098 / IS 2062 Fe410 WA	11.700 / 2
08	PACKING ROPE LGA SQ.10;20 M		TP 21599		22020 74500 / ASBESTOS	3.040 / 1
07	GATE PLATE PL.16X550X~~945~~ 975		3-47-003-00696	03	15 011 440 / SA 240 TY.304	72.00 ~~66.500~~ / 1
06	GATE INSERT-II PL.18.5X25X1723		3-47-003-00698	03	15 042 114 / SA 515 Gr.70	5.500 / 1
05	GATE INSERT-I PL.18.5X22X1723		3-47-003-00697	03	15 042 114 / SA 515 Gr.70	3.900 / 1
04	GATE GUIDE PL.22X750X975		4-47-003-01519		15 011 081 / IS 2062 Fe410 WB	26.580 / 1
03	GASKET SH.2X750X975		4-47-003-01518		22 020 63800 / CAF Gr.W/3	0.701 / 2
02	GATE BODY-II		3-47-003-00855		WELDT.	71.000 / 1
01	GATE BODY-I		3-47-003-00884		WELDT.	75.000 / 1

CAUTION: The information on this document is the property of BHARAT HEAVY ELECTRICALS LTD. It must not be used directly or indirectly in any way detrimental to the interest of the company.

TYPE OF PRODUCT OR NAME OF CUSTOMER/PROJECT

Bharat Heavy Electricals Ltd
UNIT: HIGH PRESSURE BOILER PLANT
TIRUCHIRAPALLI – 620014

	NAME	DATE
DRN	V.V/CAD	
CHD	M.K.J	120392
APPD	P.R.R	

DEPT: CC | CODE: 129 | GRADE OF UNTOL. DIM: C/M/F | SCALE: NTS | WEIGHT (Kg): ~~342.762~~ ~~337.811~~ ~~339.463~~ | REF TO ASSY / OLD DWG: 344.908 ~~345.008~~

TITLE: GATE ASSEMBLY-22" | CARD CODE: U 01 | DRAWING NO: 0-47-223-00727 | REV: 07 ~~06~~