FIRST ANGLE PROJECTION

(ALL DIMENSIONS ARE IN mm)

DRG. NO. HY-DG-0-13972-00465

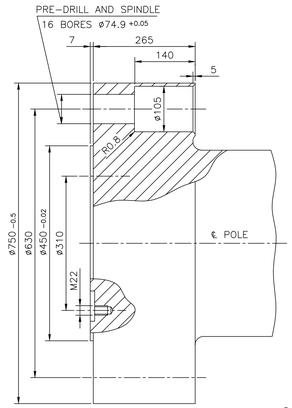

SECTION G-G (SCALE 1:5)

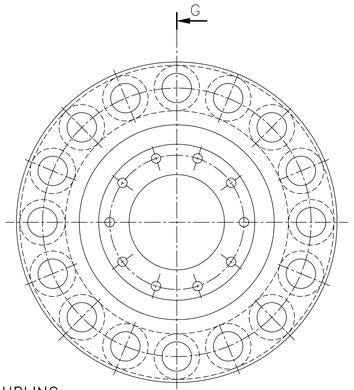

COUPLING

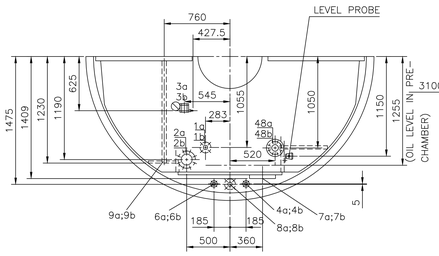

END SHIELD BEARING LOWER SECTION (TE; EE)

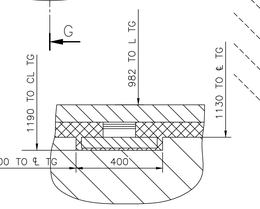

SECTION F-F (SCALE 1:10)

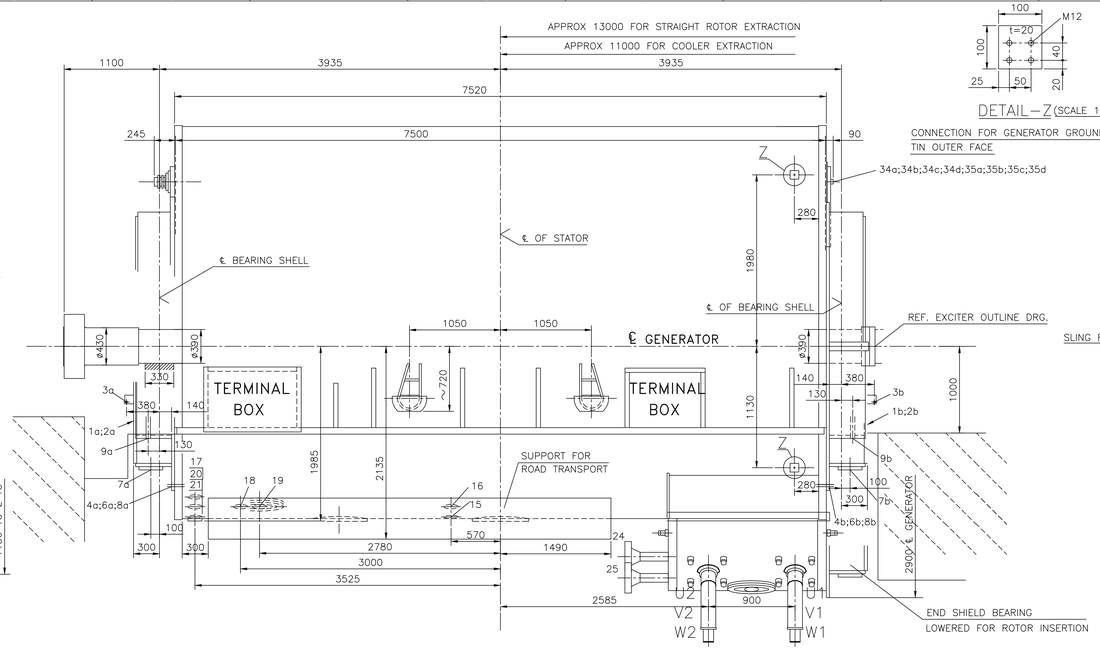

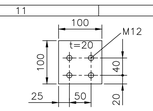

DETAIL-Z (SCALE 1:10)

CONNECTION FOR GENERATOR GROUNDING (BOTH SIDES)
TIN OUTER FACE

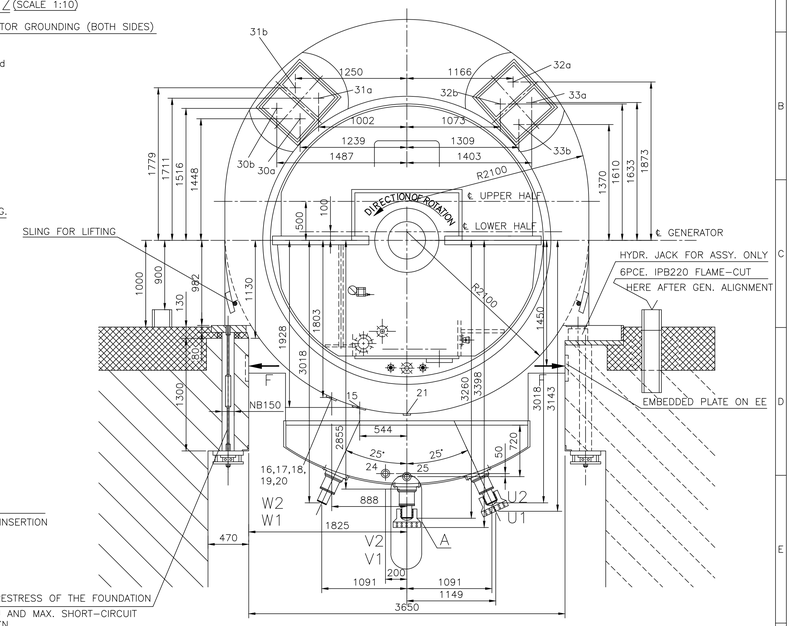

VIEW FROM 'TE' (SECTION A-B-C-D)

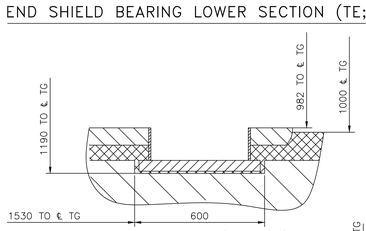

SECTION E-E (SCALE 1:10)

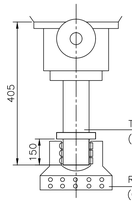

DETAIL 'A'

APP. 344.5 kN FOR LATERAL ALIGNMENT OF GEN.

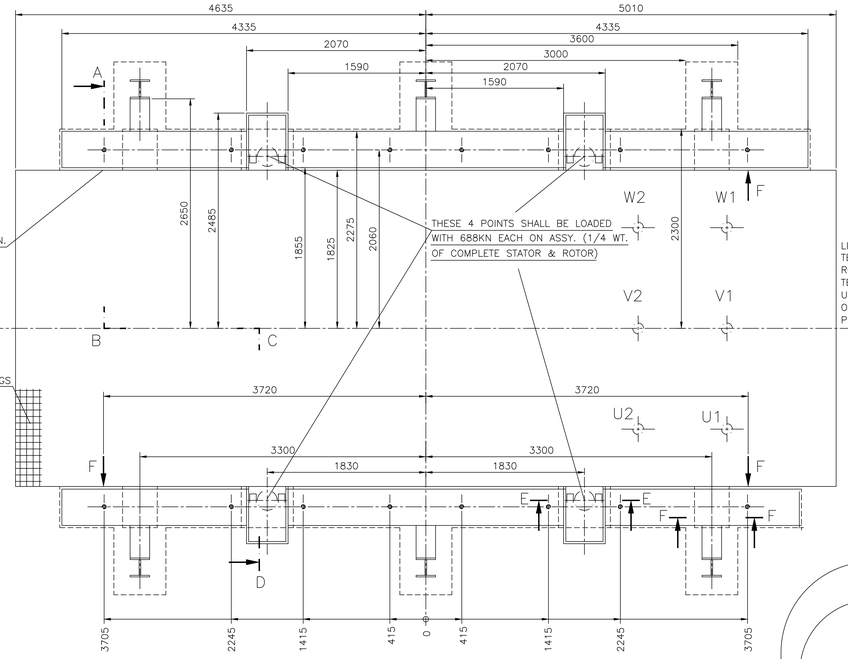

NAME/RATING PLATE DETAILS

K.W.	250000
P.F.	0.85 LAG
K.V.A.	294118
STATOR VOLTS	16500
STATOR AMPS	10291
ROTOR VOLTS	294
ROTOR AMPS	2498
RPM	3000
HZ	50
PHASE	3
CONNECTION	YY
COOLANT	HYDROGEN
INSULATION CLASS	F
GAS PRESSURE	4 BAR (G)

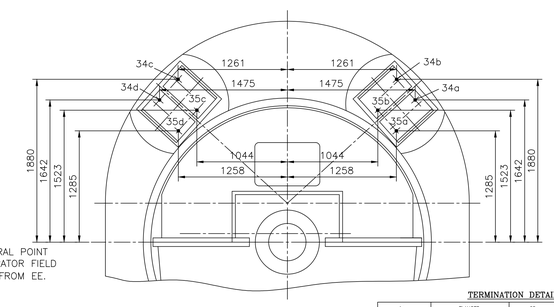

VIEW FROM 'EE'

LINE TERMINALS ARE MARKED U1,V1,W1. NEUTRAL POINT TERMINALS ARE MARKED U2,V2,W2. THE GENERATOR FIELD ROTATES IN CLOCKWISE DIRECTION AS SEEN FROM EE. TERMINAL VOLTAGE GETS POSITIVE MAXIMUM IN U1,V1,W1 SEQUENCE.
ONLY FLEXIBLE CONNECTIONS ALLOWED.
PHASE SEQUENCE: U1-V1-W1

TERMINATION DETAILS

1a	FLANGED	65	INLET BRG. OIL TE
1b	FLANGED	65	INLET BRG. OIL EE
2a	FLANGED	150	OUTLET BRG. OIL TE
2b	FLANGED	150	OUTLET BRG. OIL EE
3a	FLANGED	15	JACKING OIL INLET TE
3b	FLANGED	15	JACKING OIL INLET EE
4a	FLANGED	40	INLET SEAL OIL TE
4b	FLANGED	40	INLET SEAL OIL EE
6a	FLANGED	15	RING RELIEF TE
6b	FLANGED	15	RING RELIEF EE
7a	FLANGED	50	OUTLET S.O. TE H2 SIDE
7b	FLANGED	50	OUTLET S.O. EE H2 SIDE
8a	FLANGED	50	OUTLET S.O. TE AIR SIDE
8b	FLANGED	50	OUTLET S.O. EE AIR SIDE
9a	FLANGED	65	EXHAUST BRG. CHAMBER TE
9b	FLANGED	65	EXHAUST BRG. CHAMBER EE
15	FLANGED	50	CONNECTION FOR CO2
16	FLANGED	50	CONNECTION FOR H2
17	FLANGED	25	PRESSURE BEFORE FAN
18	FLANGED	25	PRESSURE AFTER FAN
19	FLANGED	50	CONN. TO GAS DRIER
20	FLANGED	50	CONN. FROM GAS DRIER
21	FLANGED	50	TO LIQUID DETECTOR RACK
24	WELDED	25	TO LIQUID DETECTOR RACK
25	WELDED	25	TO LIQUID DETECTOR RACK
30a,31a,32a,33a	FLANGED	100	COOLING WATER INLET TO H2 COOLER
30b,31b,32b,33b	FLANGED	100	COOLING WATER OUTLET FROM H2 COOLER
34a,34b,34c,34d	THREADED	01/2"	VENT COOLERS A,B,C,D
35a,35b,35c,35d	THREADED	01/2"	DRAIN COOLERS A,B,C,D

SHORT-CIRCUIT FORCES; WEIGHTS CONSIDERED
MAX. FORCE CALULATED FROM MAX. MOMENT FOR A 2-POLE TERMINAL SHORT-CIRCUIT AT 100% NOM. VOLTAGE. ANY ALLOWANCES NOT INCLUDED. THE FORCES ARE AS SHOWN ALTERNATING FORCES, INDEPENDENT OF THE DIRECTION OF ROTATION.

SHORT-CITCUIT LOAD + 1/2 GEN. WEIGHT = FOUNDATION LOAD

1910kN	+	1410 kN	=	3320 kN
-1910 kN	+	1410kN	=	-500 kN

MASS MOMENT OF INERTIA OF STATOR AT IST LONG AXIS 458×10^3 kgm^2

MASS MOMENT OF INERTIA OF ROTOR 5330 kgm^2

FOUNDATION LOAD AT SHORT-CIRCUIT (ALTERNATING FORCES)

MAX. SHORT CIRCUIT TORQUE AT 2-POLE TERMINAL FAULT (t IN s; M IN kNm)

$Mk = 5582e^{-t/0.2344} \times \sin wt - 2791e^{-t/0.2367} \times \sin 2wt + 814e^{-t/0.2602}$

Mk=7842kNm

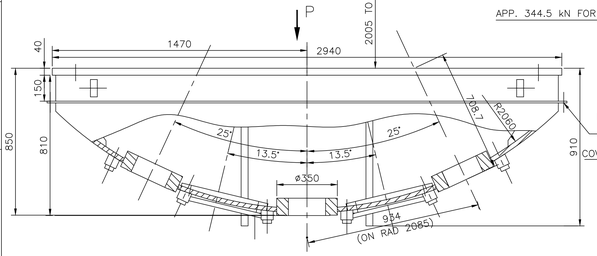

TERMINAL BOX DETAIL

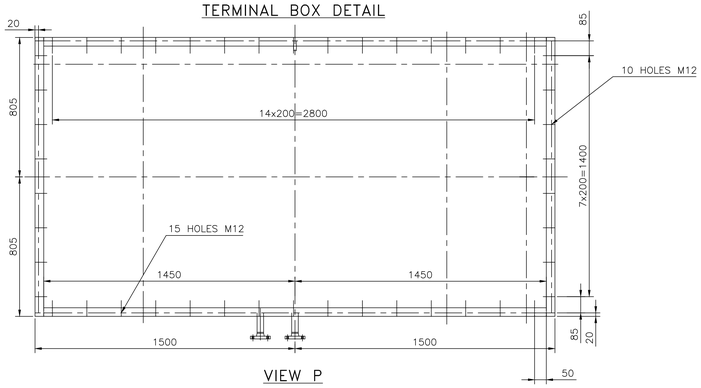

VIEW P

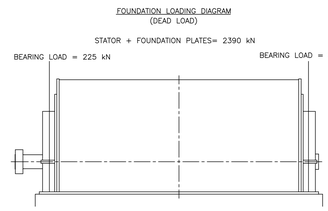

FOUNDATION LOADING DIAGRAM
(DEAD LOAD)

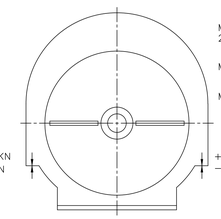

WEIGHT:

STATOR SHIPPING WEIGHT	228.0 Mg
COOLERS	8.6 Mg
END SHIELD & COMPLETING ASSEMBLIES	23.3 Mg
ROTOR	42.915 Mg
TOTAL WEIGHT OF GENERATOR	297.5 Mg

JSW Steel Limited, Dolvi Works
GEETAPURAM, DOLVI, TAL. PEN, DIST. RAIGAD, MAHARASHTRA.
PHASE III EXPANSION PROJECTS – CPP-4
BHARAT HEAVY ELECTRICALS LTD. HYDERABAD
MECON LIMITED

SCALE		PLANT	CPP-4 250 MW
DSGND. BY		UNIT	GENERATOR, TURBINE AND ITS AXILLARIES
DRAWN BY	PDN 06.03.25	SUB UNIT	
CHKD. BY	PDN 06.03.25	ASSEMBLY	
APPD. BY	KCP 06.03.25	TITLE :	GENERATOR OUTLINE
JOB No.		SHT. SIZE A0	JSW DRG. No. CPP-4/TG/ELE/DE/411 SHEET 1 REV. 0
			BHEL DRG. No. HY-DG-0-13972-00485 SHEET 1 REV. 01

REV.	DATE	ALTD	CHD	APPD.
01	03.05.25	ALTD PDN	CHD PDN	APPD. KCP

ZONE: TITLE BLOCK INCLUDED

THE INFORMATION ON THIS DOCUMENT IS THE PROPERTY OF BHARAT HEAVY ELECTRICALS LIMITED. IT MUST NOT BE USED DIRECTLY OR INDIRECTLY IN ANY WAY DETRIMENTAL TO THE INTREST OF THE COMPANY

INVENTORY NO. [SIGN AND DATE] REF. DRG. NO. [COMPLETED FILE NAME] 0-139-00-01367-00