FIRST ANGLE PROJECTION

(ALL DIMENSIONS ARE IN mm)

DRG. NO. 0-62-221-00003

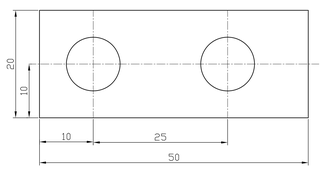

SH 1x20x50

MATL-IS:226

ITEM NO.10

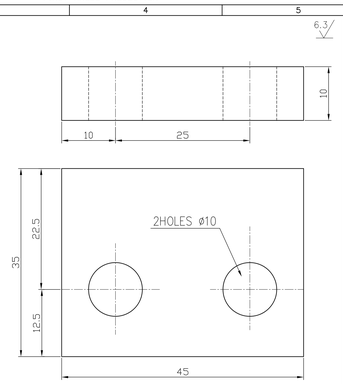

PL 10x35x45 MATL-IS:2062

ITEM NO.08

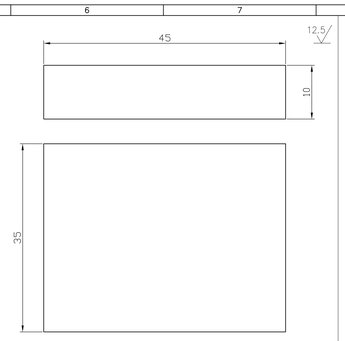

PL 10x35x45

MATL-IS:2062

ITEM NO.11

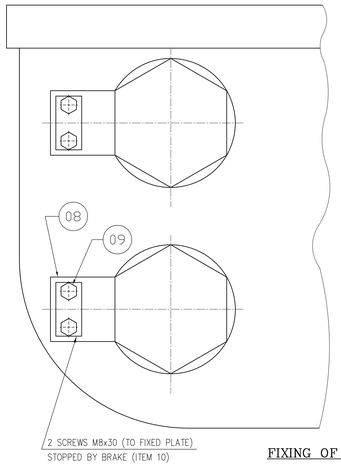

FIXING OF THE PLATES

MACHINING TOLERANCE: ISO 1328 QUALITY-8		
TEETH		SPUR
NUMBER OF TEETH	Z	= 210
NORMAL MODULE.	M'T	= 25.50
TOOTH DEPTH		= 61.11
NORMAL TOOTH THICKNESS AT TIP		= $15.60^{\pm 0.1}$
NORMAL TOOTH THICKNESS AT ROOT		= $67.90^{\pm 0.1}$
CHORDAL TOOTH THICKNESS AT,h=34.97		= 48.95
ADDENDUM MODIFICATION		= XMO(±MM) +12.198
ADDENDUM		= 34.96
DEDENDUM		= 26.15
CUTTER TOOL PRESSURE ANGLE	NO.	= 25°
DISTANCE ON 30 TEETH	W	= $2295.39^{-0.96}_{-1.24}$
TOTAL BACKLASH IN OPERATION	JN	= 1.44 TO 1.92
DISTRIBUTION — ON THE PINION		0.6 TO 0.8
DISTRIBUTION — ON THE GIRTH GEAR		0.84 TO 1.12
MESH WITH PINION 28 TEETH DRG.NO. 3-62-221-00049		
OPERATING CENTER DISTANCE		A'=3045

TOTAL TOOTH PROFILE DEVIATION (Fa): 105 MICRONS.
SINGLE PITCH DEVIATION (fpt):±66 MICRONS.
TOTAL CUMULATIVE PITCH DEVIATION (Fp): 341 MICRONS.
RUN OUT TOLERANCE ON PCD (Fr): 273 MICRONS.

TOTAL BACKLASH IN MOUNTING 2.66 TO 3.14mm

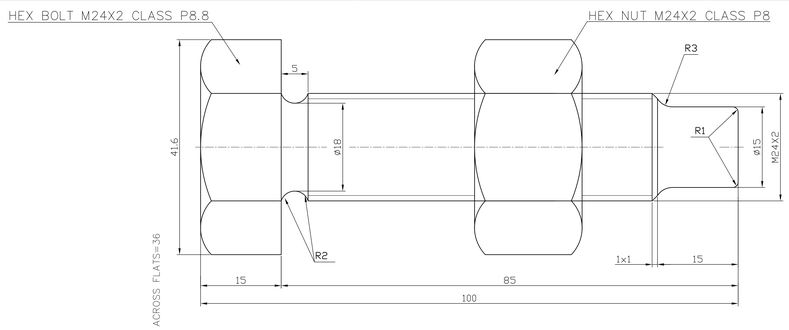

ITEM NO.06 & 07

NOTES:-

1. GIRTH GEAR TWO HALF SHALL BE MATCH MARKED WITH SERIAL NO. ALONG WITH THE DUMB BELL TO ENSURE THEIR MATCHING AT SITE.

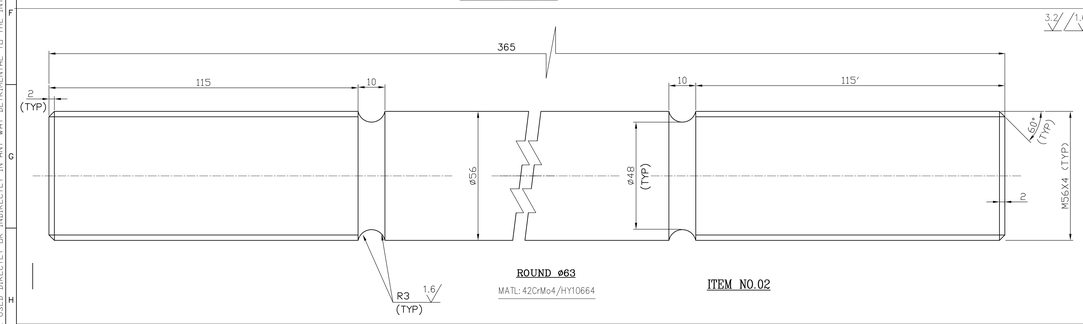

ROUND ø63

MATL:42CrMo4/HY10664

ITEM NO.02

FOR FIXING OF THE RING GEAR ON THE BACK OF THE MILL PROCEED SAME AS FOR FITTING OF THE TWO HALVES.

DRIVE CAPACITY: 1870 KW, 1500 RPM
GEAR SPEED: 16 RPM

I. PUNCH OR CAST SUPPLIER CODE NO.AND" BHEL"MARK.

II. ON EACH FACE SCRIBE THE OPEARTING PITCH CIRCLE. DIAMETERE 1mm DEPTH APPROX.

III. MARK THE JOINT FACES: JOINT FLANGE MACHINED ON THE CENTERLINE BETWEEN TWO TEETH.

IV. ASSSEMBLY OF HALF GEARS BY SLOW PREHEATING OF STUD BOLTS IN OIL AT 85° C ABOVE THE AMBIANT TEMPERATURE

V. REMOVE THIS SCREW AFTER MOUNTING OF GEAR.

ITEM NO.	DESCRIPTION	DRAWING NO.	VAR. NO.	RAW MATERIAL SIZE OR CASTING DRG. NO. OR FORGING DRG. NO.	MATERIAL CODE / MATERIAL SPECN.	NET WT. / QUANTITY	GROSS WT.
11	WELDED PLATE				IS:2062	0.12 / 8	
10	BRAKE				IS:2062	0.007 / 8	
09	SCREW M8X30 LG. (CLASS P8.8)					0.002 / 16	
08	PLATE FIXED				IS:2062	0.12 / 8	
07	ADJUSTING SCREW (M24X2 PITCH) CLASS P 8.8					0.46 / 8	
06	LOCK NUT (M24X2 PITCH) CLASS P 8.8					0.46 / 8	
05	CENTER PIN				42Cr M04/HY10664	15 / 2	
04	LOCK NUT M56X4 (CLASS P10)					0.83 / 16	
03	NUT M56X4 (CLASS P 10)					1.40 / 16	
02	ASSEMBLING BOLT				42Cr M04/HY10664	7.00 / 12	
01	1/2 GIRTH GEAR				BA50062	9074.71 / 2	

THE FOLLOWING CONDITIONS APPLY EXCEPT OTHERWISE STATED.

1. REF. TO HY0230261 FOR UNSPECIFIED TOLERANCES.
2. CHAMFER M/CD. SHARP EDGES AT 45°.
3. INTERNAL M/CD. CORNER RADII 1 TO 0.7
4. THE SURFACE ROUGHNESS WHERE-EVER NOT SHOWN SHALL BE TAKEN FROM THE SURFACE ROUGHNESS SHOWN OUT SIDE THE BACK SLASH GIVEN OR THE TOP MOST RIGHT CORNER OF THE DRG.

APPROVED SAP

TYPE OF PRODUCT
NAME OF CUSTOMER/PROJECT: WET BALL MILL BHEL 4074

BHARAT HEAVY ELECTRICALS LIMITED HYDERABAD

	NAME	SIGN.	DATE	NO.OF VAR.
DRN.	SHARIFF		03.08.22	
CHD.	KOM		03.08.22	
APPD.	AMAN	RESTRICTED USE	03.08.22	

DEPT. 4460
CODE MULV. ENGG.
SCALE NTS
WEIGHT (KG) 14670
REF. TO ASSY DRG. —
ITEM NO. —
NO.OF ITEMS —

TITLE: GIRTH GEAR – ø5.424M

DRAWING NO. 0-62-221-00003
REV. 00
SHEET NO. 02
NO OF SHEETS 02

REV.	DATE	ALTERED	CHECKED	APPROVED	ZONE

THE INFORMATION ON THIS DOCUMENT IS THE PROPERTY OF BHARAT HEAVY ELECTRICALS LIMITED.
IT MUST NOT BE USED DIRECTLY OR INDIRECTLY IN ANY WAY DETRIMENTAL TO THE INTEREST OF THE COMPANY

COMP. FILE NAME 06250038-2DWG

REF. DRG. NO.

INVENTORY NO

Aug Wed 10 10:45 2022

This Drawing is printed from Engineering Digital Archive System (EDAS).
Therefore signatures are not essentially required.