FIRST ANGLE PROJECTION

(ALL DIMENSIONS ARE IN mm)

DRG. NO. 1-38101-03622 SHT. 01 OF 03

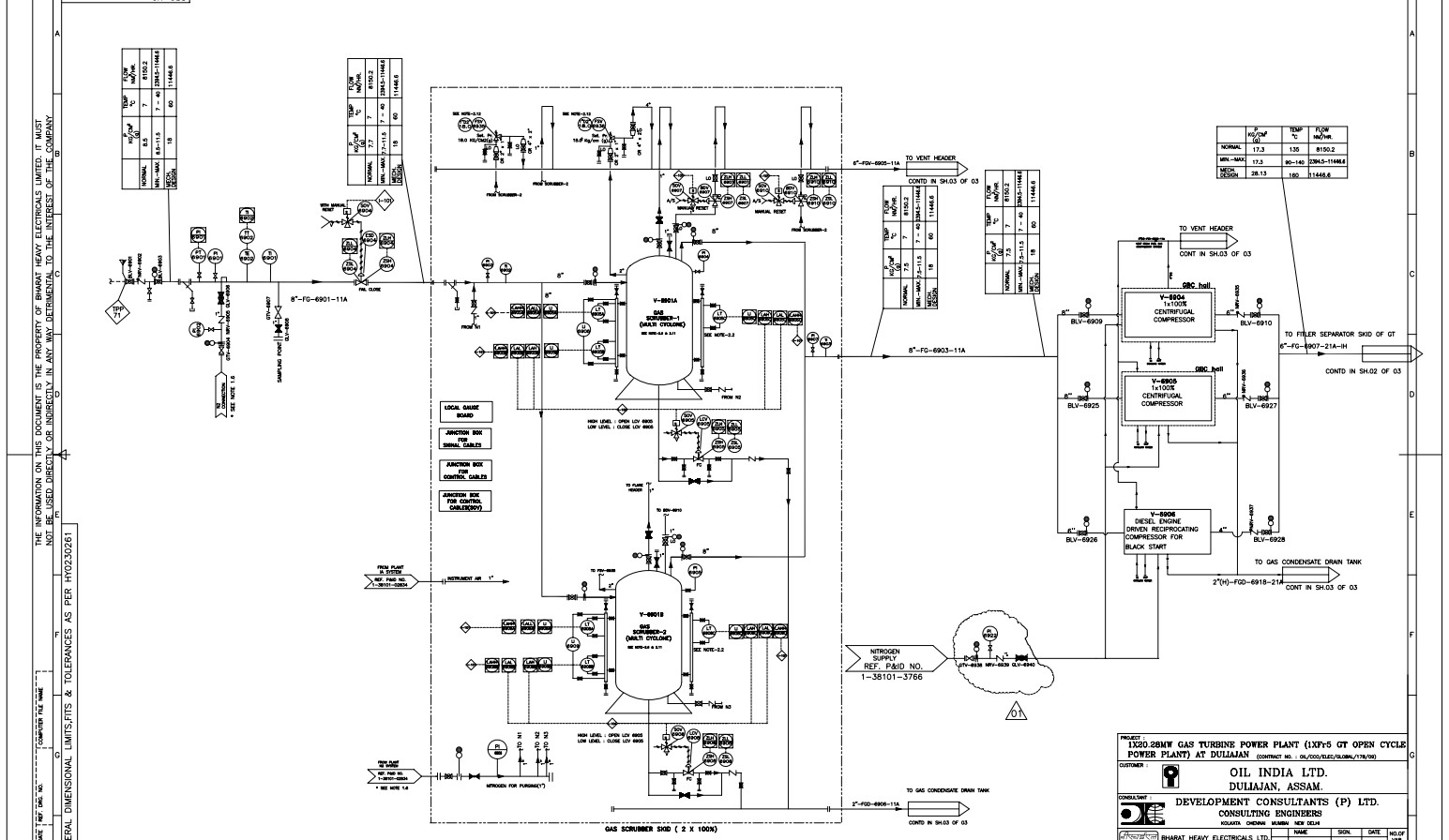

	P KG/CM² (G)	TEMP °C	FLOW MN³/HR.
NORMAL	17.3	135	8150.2
MIN.-MAX.	17.3	90-140	23943-11446.6
MECH. DESIGN	28.13	160	11446.6

	P KG/CM² (G)	TEMP °C	FLOW MN³/HR.
NORMAL	16.8	135	8150.2
MIN.-MAX.	16.8-17.3	90-140	23943-11446.6
MECH. DESIGN	28.13	160	11446.6

	P KG/CM² (G)	TEMP °C	FLOW MN³/HR.
NORMAL	7.3	7 - 40	23943-11446.6
MIN.-MAX.	3.1-17.3	1 - 40	23943-11446.6
MECH. DESIGN	18	60	11446.6

	P KG/CM² (G)	TEMP °C	FLOW MN³/HR.
NORMAL	16.3	135	8150.2
MIN.-MAX.	16.3-17.3	90-140	23943-11446.6
MECH. DESIGN	28.13	160	11446.6

	P KG/CM² (G)	TEMP °C	FLOW MN³/HR.
NORMAL	16.3	135	8150.2
MIN.-MAX.	16.3-17.3	90-140	23943-11446.6
MECH. DESIGN	28.13	160	11446.6

	P KG/CM² (G)	TEMP °C	FLOW MN³/HR.
NORMAL	7.3	7 - 40	23943-11446.6
MIN.-MAX.	3.1-17.3	1 - 40	23943-11446.6
MECH. DESIGN	18	60	11446.6

PROJECT : 1320.28MW GAS TURBINE POWER PLANT (1XF×5 GT OPEN CYCLE POWER PLANT) AT DULIAJAN (CONTRACT NO. : OIL/CCG/ELEC/GJ/BHL/179/09)

CUSTOMER : OIL INDIA LTD. DULIAJAN, ASSAM.

CONSULTANT : DEVELOPMENT CONSULTANTS (P) LTD. CONSULTING ENGINEERS KOLKATA CHENNAI MUMBAI NEW DELHI

BHARAT HEAVY ELECTRICALS LTD. UNIT : HYDERABAD

	NAME	SIGN.	DATE	NO.OF VAR.
DRN.	S.SURENDRA	Sd/-	11.10.09	N.A.
CHD.	M S P BABU		11.10.09	
APPD.	R.C.V.S		11.10.09	

DEPT. PED. CODE | UNIT(s), DIMS. IN mm/kg | SCALE | WEIGHT | CHKD. REF. TO ASSY. DRG. | ITEM NO. | NO.OF ITEMS

N.A. | N.A. | N.A. | N.A. | N.A.

TITLE: P & I DIAGRAM FOR OFF-BASE FUEL GAS SYSTEM FOR GT

CARD CODE: NA | DRG. No. 1-38101-03622 | REV. 01 | SHT. No. 01 | NO. OF SHT. 03

REV.	DATE	ALTERED	CHD/APPD
01	11.10.09		

REVISED AS PER CUSTOMER COMMENT

THE INFORMATION ON THIS DOCUMENT IS THE PROPERTY OF BHARAT HEAVY ELECTRICALS LIMITED. IT MUST NOT BE USED DIRECTLY OR INDIRECTLY ANY WAY DETRIMENTAL TO THE INTEREST OF THE COMPANY.

GENERAL DIMENSIONAL LIMITS,FITS & TOLERANCES AS PER HY0230261

COMPUTER FILE NAME | DRN. AND DATE | REF. DRG. NO. | INVENTORY NO.

FIRST ANGLE PROJECTION

(ALL DIMENSIONS ARE IN mm)

DRG. NO. 1-38101-03622 SHT. 02 OF 03

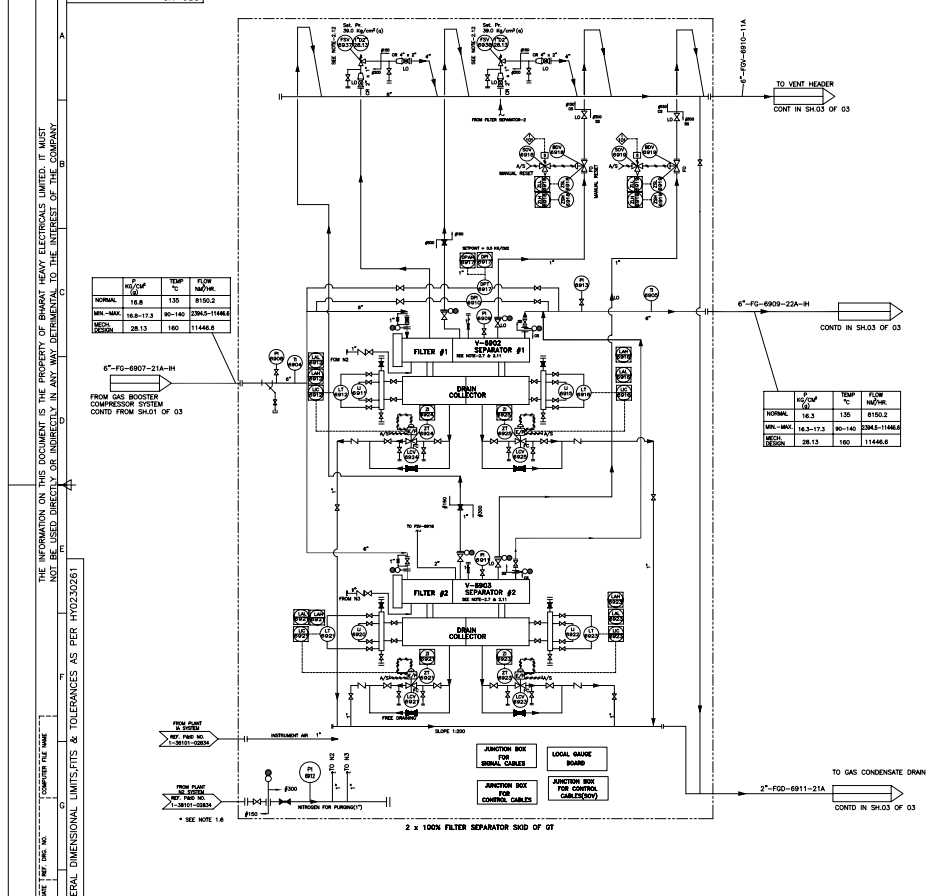

	P KG/CM² (G)	TEMP °C	FLOW MN³/HR.
NORMAL	16.3	135	8150.2
MIN.-MAX.	16.3-17.3	90-140	23943-11446.6
MECH. DESIGN	28.13	160	11446.6

INTERLOCK SUMMARY:-

TITLE OF LOGIC	LOGIC NO.	DESCRIPTION	REMARKS	PROCESS INTERLOCK EXECUTED IN
ESD-6904	I-101	LAHH-6905A/ B/C (2 OF 3 LOGIC) LEVEL HIGH HIGH IN KNOCK OUT DRUM OF GT	TO CLOSE IN AUTO ESV-6903, 6904 TO OPEN IN AUTO BDV-6931, 6907, 6910 6918 & 6919	BOP PLC
		IN CASE OF FIRE IN GT (VIBE NOTE 2.6)	TO CLOSE IN AUTO ESV-6903, 6904 TO OPEN IN AUTO BDV-6931, 6907, 6910 6918 & 6919	
		IN CASE OF LOCAL SHUTDOWN/ EMERGENCY	TO CLOSE REMOTE MANUALLY ESD-6903, 6904 TO OPEN REMOTE MANUALLY BDV-6931, 6907, 6910 6918 & 6919	
LCV-6905	I-102	LAH-6905B/C (2 OF 3 LOGIC) LEVEL HIGH IN KNOCK OUT DRUM FOR GT	TO OPEN IN AUTO LCV-6906	BOP PLC
		LAL-6905B/C (2 OF 3 LOGIC) LEVEL LOW IN KNOCK OUT DRUM FOR GT	TO CLOSE IN AUTO LCV-6906	
FUEL GAS CONDENSATE DRAIN SKID (T-6901) P-6901 P-6902	I-103	LAH-6903 CONDENSATE LEVEL IN THE TANK HIGH	TO START PUMP IN AUTO	BOP PLC
		LAL-6903 CONDENSATE LEVEL IN THE TANK LOW	TO TRIP PUMP IN AUTO	
LCV-6906	I-104	LAH-6906B/C (2 OF 3 LOGIC) LEVEL HIGH IN KNOCK OUT DRUM FOR GT	TO OPEN IN AUTO LCV-6905	BOP PLC
		LAL-6906B/C (2 OF 3 LOGIC) LEVEL LOW IN KNOCK OUT DRUM FOR GT	TO CLOSE IN AUTO LCV-6905	

TAG NOS. ALLOCATION SUMMARY

	RANGE	USED IN THIS DRG. NO.	SPARE
INSTRUMENTS	PI/DPI: 6901 – 6999 TI: 6901 – 6999 REST: 6901 – 6999	6922 6908 6938	
VALVES	6901 – 6999	6940	
PIPE LINES	6901 – 6999	6922	
INTERLOCKS	101–110	104	
TERMINAL POINTS	70–79	71	
EQUIPMENT NOS.			

PROJECT : 1320.28MW GAS TURBINE POWER PLANT (1XF×5 GT OPEN CYCLE POWER PLANT) AT DULIAJAN (CONTRACT NO. : OIL/CCG/ELEC/GJ/BHL/179/09)

CUSTOMER : OIL INDIA LTD. DULIAJAN, ASSAM.

CONSULTANT : DEVELOPMENT CONSULTANTS (P) LTD. CONSULTING ENGINEERS KOLKATA CHENNAI MUMBAI NEW DELHI

BHARAT HEAVY ELECTRICALS LTD. UNIT : HYDERABAD

	NAME	SIGN.	DATE	NO.OF VAR.
DRN.	S.SURENDRA	Sd/-	11.10.09	N.A.
CHD.	M S P BABU		11.10.09	
APPD.	R.C.V.S		11.10.09	

DEPT. PED. CODE | UNIT(s), DIMS. IN mm/kg | SCALE | WEIGHT | CHKD. REF. TO ASSY. DRG. | ITEM NO. | NO.OF ITEMS

N.A. | N.A. | N.A. | N.A. | N.A.

TITLE: P & I DIAGRAM FOR OFF-BASE FUEL GAS SYSTEM FOR GT

CARD CODE: NA | DRG. No. 1-38101-03622 | REV. 01 | SHT. No. 02 | NO. OF SHT. 03

REV.	DATE	ALTERED	CHD/APPD
01	11.10.09		

REVISED AS PER CUSTOMER COMMENT

THE INFORMATION ON THIS DOCUMENT IS THE PROPERTY OF BHARAT HEAVY ELECTRICALS LIMITED. IT MUST NOT BE USED DIRECTLY OR INDIRECTLY ANY WAY DETRIMENTAL TO THE INTEREST OF THE COMPANY.

GENERAL DIMENSIONAL LIMITS,FITS & TOLERANCES AS PER HY0230261

COMPUTER FILE NAME | DRN. AND DATE | REF. DRG. NO. | INVENTORY NO.

FIRST ANGLE PROJECTION

(ALL DIMENSIONS ARE IN mm)

DRG. NO. 1-38101-03622 SHT. 03 OF 03

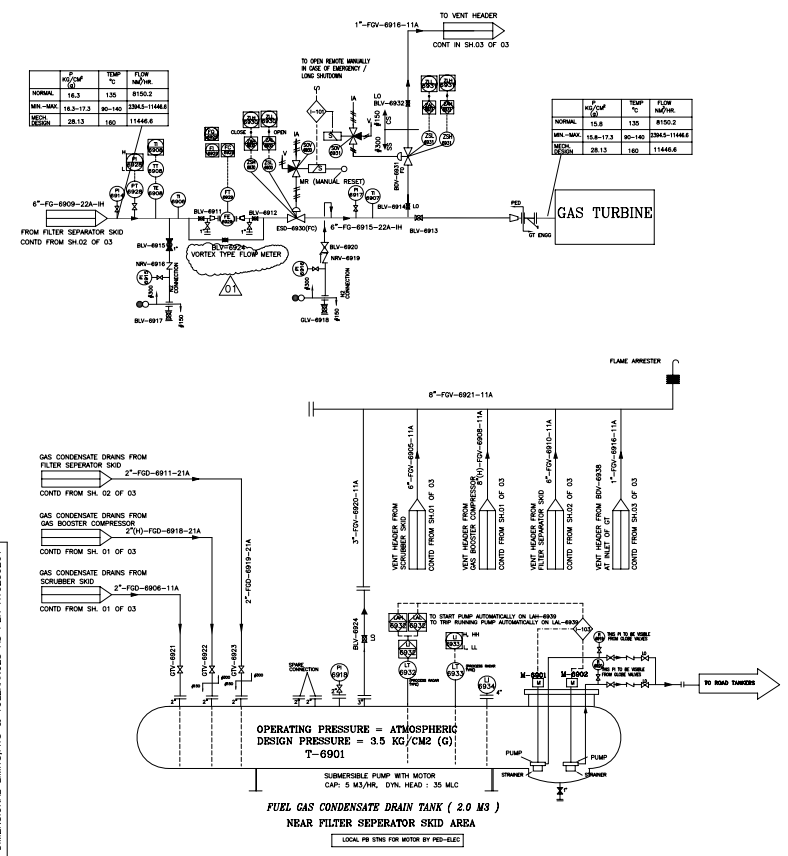

	P KG/CM² (G)	TEMP °C	FLOW MN³/HR.
NORMAL	15.9	135	8150.2
MIN.-MAX.	15.9-17.3	90-140	23943-11446.6
MECH. DESIGN	28.13	160	11446.6

NOTES:-

1.1- VENTS/DRAINS ARE SHOWN ONLY TO MEET SYSTEM REQUIREMENTS. ADDITIONAL HIGH POINT VENT AND LOW POINT DRAINS SHALL BE PROVIDED ACCORDING TO FINAL LAYOUT.

1.2. NECESSARY ROOT VALVES, INST. ISOLATION VALVES, VENT/DRAIN VALVES WILL BE PROVIDED FOR PR., DPI, FLOW, & LEVEL MEASURING INST. EVEN THOUGH SAME MAY NOT BE INDICATED IN THE DRAWING.

ALL INSTRUMENT ISOLATION VALVES, VENT & DRAIN VALVES ARE OF GATE TYPE AS PER BHEL'S PIPING MATERIAL SPECIFICATION.

1.3. FUEL GAS LINES DOWNSTREAM OF FUEL GAS FINE FILTER SEPARATOR SKID IS OF STAINLESS STEEL MATERIAL.

1.4. ALL VENTS & DRAINS UPTO FIRST ISOLATION VALVE (NON LO TYPE) SHALL BE OF STAINLESS STEEL MATERIAL FOR SS LINES

1.5. CUSTOMER/CONSULTANT SHALL ENSURE INSTRUMENT AIR SUPPLY BEFORE COMMISSIONING OF THE GAS CONDITIONING SKID FOR OPERATION OF THE INSTRUMENTS(LEVEL CONTROL VALVES/SH-UTDOWN/BLOWDOWN/SOLENOID VALVES).

1.6. THIS BALL VALVE ALONG WITH SPECTACLE BLIND SHALL BE OPENED AFTER ENSURING THAT THE NRVs IN THE N2 SYSTEM ARE NOT PASSING. ANY READING IN THE PRESSURE GAUGE IS RESULT OF PASSING THROUGH NRVs.

1.7. Deleted

1.8. TEMPERATURE PARAMETERS WILL BE INDICATED AFTER FINALISATION OF COMPRESSOR.

2.1. VOTAGE RATING SOLENOID VALVE = 24 V DC, TYPE OF SOLENOID VALVE = UNIVERSAL TYPE

2.2. LEVEL TRANSMITTERS ON KNOCK OUT DRUM ARE OF TORQUE TUBE TYPE AND THESE TRANSMITTERS ARE MOUNTED AT SAME ELEVATION.

2.3. ALL ELECTRICAL/ ELECTRONIC INSTRUMENTS SHALL BE DESIGNED FOR HAZARDOUS AREA CLASSIFICATION Gr II A & B AS PER IS-2148 AS THE GAS CONTAINS NO HYDROGEN.

2.5 FIRE IN GT SYSTEM MAY OCCUR IN THE FOLLOWING AREAS.
A) GT COMPARTMENT
B) GENERATOR COMPARTMENT
C) GT ACCESSORY BASE
D) GT LIQUID FUEL MODULE
FIRE IN ANY OF THE ABOVE DEFINED AREAS BEING COMMUNICATED BY CO2 GTG FIRE FIGHTING PANEL TO MARK-VI AND ACCORDINGLY, CLSOURE/OPENING OF ON/OFF VALVE AT GT INLET IS BEING IMPLEMENTED BY DCS THROUGH MARK-VI.

2.6 SET POINTS FOR SCRUBBER ARE AS FOLLOWS:
(A) LALL = 75 MM, (B) LAL= 125 MM, (C) LAH = 225 MM, (D) LAHH = 275 MM

2.7 SET POINTS FOR FILTER SEPARATOR ARE AS FOLLOWS:
(A) LAL = 125 MM, (B) LIC= 175 MM, (C) LAH = 225 MM

○ –INDICATES FIELD MOUNTED INSTRUMENT.
⊡ –INDICATES DCS INSTRUMENT.
⊡ –INDICATES LOCAL GAUGE BOARD/LOCAL PANEL INSTRUMENT.

2.9 FSV-6908/6917/6918 ARE FIRE SAFE CONDITION VALVES AS PER API-520.

2.10 THE FSV INDICATION (N) REPRESENTS 1"(INLET) x 2"(OUTLET) VALVE WITH "E" TYPE ORIFICE AND SET PRESSURE OF 6.5 KG/CM2(G).

2.11 ALL VESSELS(SCRUBBER, FILTER SEPARATOR, & GAS CONDENSATE DRAIN TANK) SHALL BE DESIGNED AS ASME SEC. VIII, DIV. 1

2.12 (i) OUTLET ISOLATION VALVE OF SAFETY VALVE SHALL BE ALWAYS KEPT OPEN.
(ii) OUTLET ISOLATION VALVE OF SAFETY VALVE SHALL BE CLOSED ONLY WHEN THE INLET ISOLATION VALVE OF SAFETY VALVE IS CLOSED AND THE SPACE BETWEEN THE SAFETY VALVE AND INLET ISOLATION VALVE IS ADEQUATELY DEPRESSURISED THROUGH BLEED VALVE.
(iii) SAFETY VALVE SHALL BE TAKEN FOR MAINTENANCE ONLY AFTER THE SPACE BETWEEN THE INLET VALVE AND SAFETY VALVE AND SAPCE BETWEEN SAFETY VALVE AND OUTLET ISOLATION VALVE ARE SAFELY DEPRESSURISED THROUGH RESPECTIVE BLEED VALVES..

2.13. THE FLOW INSTRUMENT REQUIRES MINIMUM STRAIGHT PIPE DISTANCE OF 10xDia AND 5xDia

2.14. DELETED

PROJECT : 1320.28MW GAS TURBINE POWER PLANT (1XF×5 GT OPEN CYCLE POWER PLANT) AT DULIAJAN (CONTRACT NO. : OIL/CCG/ELEC/GJ/BHL/179/09)

CUSTOMER : OIL INDIA LTD. DULIAJAN, ASSAM.

CONSULTANT : DEVELOPMENT CONSULTANTS (P) LTD. CONSULTING ENGINEERS KOLKATA CHENNAI MUMBAI NEW DELHI

BHARAT HEAVY ELECTRICALS LTD. UNIT : HYDERABAD

	NAME	SIGN.	DATE	NO.OF VAR.
DRN.	S.SURENDRA	Sd/-	11.10.09	N.A.
CHD.	M S P BABU		11.10.09	
APPD.	R.C.V.S		11.10.09	

DEPT. PED. CODE | UNIT(s), DIMS. IN mm/kg | SCALE | WEIGHT | CHKD. REF. TO ASSY. DRG. | ITEM NO. | NO.OF ITEMS

N.A. | N.A. | N.A. | N.A. | N.A.

TITLE: P & I DIAGRAM FOR OFF-BASE FUEL GAS SYSTEM FOR GT

CARD CODE: NA | DRG. No. 1-38101-03622 | REV. 01 | SHT. No. 03 | NO. OF SHT. 03

REV.	DATE	ALTERED	CHD/APPD
01	11.10.09		

REVISED AS PER CUSTOMER COMMENT

THE INFORMATION ON THIS DOCUMENT IS THE PROPERTY OF BHARAT HEAVY ELECTRICALS LIMITED. IT MUST NOT BE USED DIRECTLY OR INDIRECTLY ANY WAY DETRIMENTAL TO THE INTEREST OF THE COMPANY.

GENERAL DIMENSIONAL LIMITS,FITS & TOLERANCES AS PER HY0230261

COMPUTER FILE NAME | DRN. AND DATE | REF. DRG. NO. | INVENTORY NO.