DRAWING NO. 1-V-N805-05158R/01

ALL DIMENSIONS ARE IN MILLIMETRES. FOR TOLERANCES OF UNTOLERANCED DIMENSIONS DURING MANUFACTURE REFER RELEVANT QCP/QP

SECTION AA

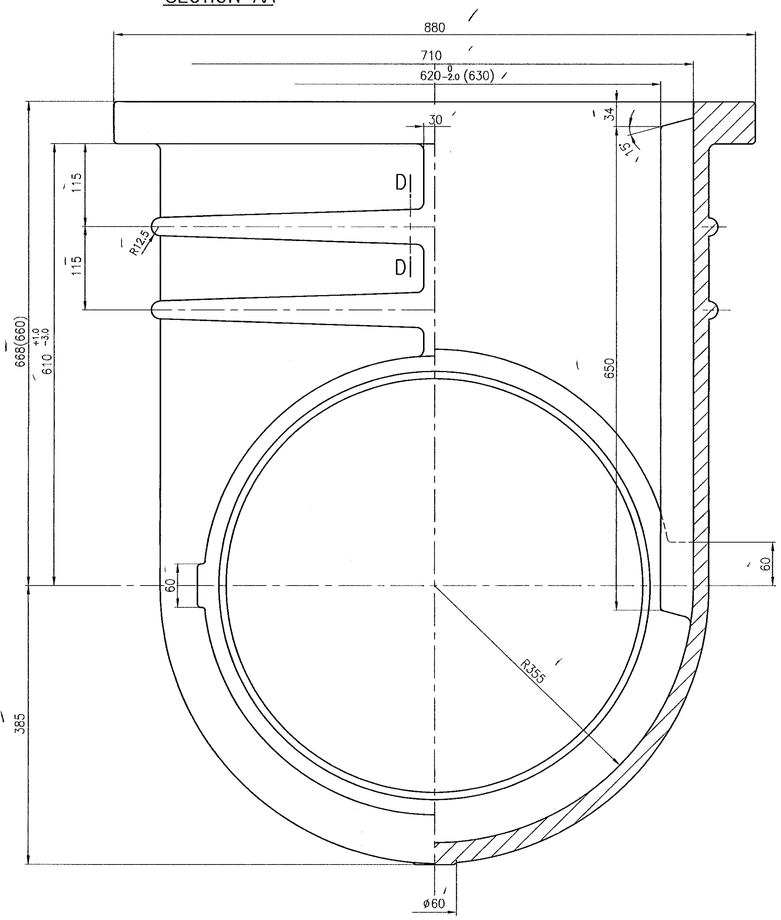

SECTION DD

SECTION BB

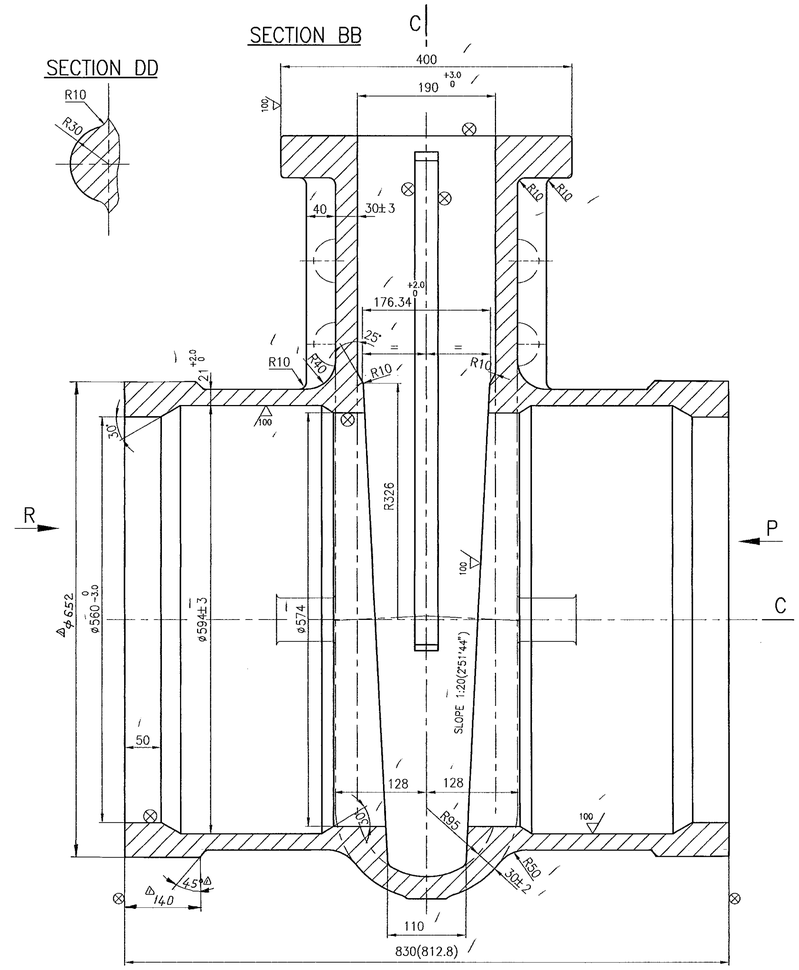

MARKING DETAILS ON CASTING

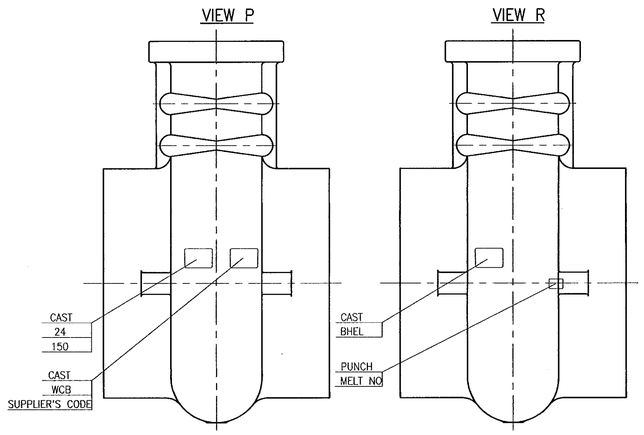

NOTES

1. NECESSARY MACHINING ALLOWANCES HAVE BEEN ADDED ON ALL MACHINABLE SURFACES.
2. ⊗ THIS MARK INDICATES THE SURFACES TO BE MACHINED.
3. UNSPECIFIED CASTING RADII–R5 MAX.
4. FOR PERMISSIBLE DIMENSIONAL DEVIATIONS OF NON TOLERANCED CASTING DIMENSIONS REFER LATEST APPLICABLE QUALITY PROCEDURE.
5. CASTING SHALL GENERALLY COMPLY WITH THE REQUIREMENTS OF LATEST APPLICABLE QUALITY PROCEDURE IN ALL RESPECTS.
6. 100/V INDICATES THE CASTING SURFACES WHICH MUST BE OF HIGH QUALITY WITHOUT SURFACE UNEVENNESS.
7. FINISH MACHINED DIMENSIONS ARE INDICATED WITHIN BRACKETS FOR INFORMATION ONLY,.
8. PUNCHING DETAILS SHALL BE MARKED ONLY ON RAISED FLAT SURFACE GIVEN AT ZONE C–11
9. HEIGHT OF CASTING LETTERS 30mm.

SECTION CC

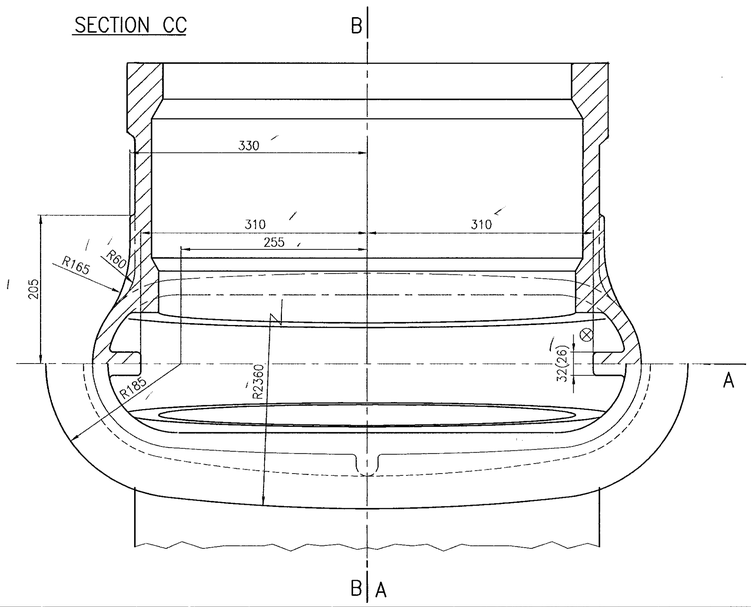

SECTION XX

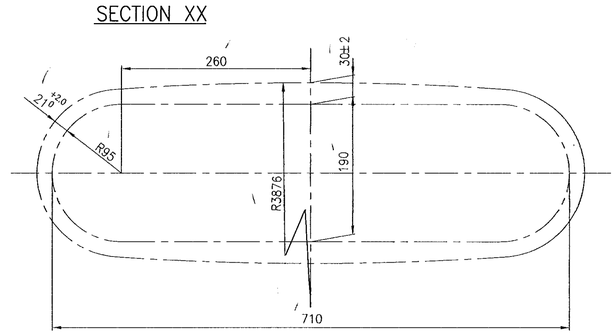

No OFF	DESCRIPTION	MATL CODE	MATL SPECN	HEAT TREATMENT	SCRAP SORT	NET WT (Kg)	GROSS WT. (Kg)	DRAWING No	ITEM No
	CASTING	92201051	A216 WCB, ATTEST	NR			550		

TYPE OF PRODUCT
OR NAME OF
CUSTOMER/PROJECT

BHARAT HEAVY ELECTRICALS LTD.,
UNIT: HIGH PRESSURE BOILER PLANT.
TIRUCHIRAPALLI-620014.
365-119

	NAME	SIGN	DATE
DRN	V.BAIRAVAN		18.3.99
CHD	R.L.NARAYANAN		18/03/99
APPD	M.RAJAKUMAR		18/3/99

DEPT VL
CODE 320
SCALE N T S
WEIGHT (KG). 550
REFERENCE INFORMATIONS
CAD REF. NO:C105158R

TITLE: BODY 24"/150 CL
CARD CODE U 01
DRAWING NO. 1-V-N805-05158R
REV 01

REV	DATE	ALTERED
01	23.6.99	CHD & APPD M.R.K.

DIM. ø652 WAS ø636.
DCN No. HM 0395

CAUTION: The information on this document is the property of BHARAT HEAVY ELECTRICALS LTD. It must not be used directly or indirectly in any way detrimental to the interest of the company.

Size A1

DRAWING NO. 2-V-N920-08145/1

ALL DIMENSIONS ARE IN MILLIMETRES. FOR TOLERANCES OF UNTOLERANCED DIMENSIONS DURING MANUFACTURE REFER RELEVANT QCP / QP

SL. No.	TYPE No.	DRAWING No.	VALVE SPECN.	BODY ASSY. DRG. No. / BODY CASTING DRG. NO.	HYD. TEST (PRESSURE IN Kg/cm²) BODY	HYD. TEST SEAT	PR.-TEMP. RATINGS 38°C	200°C	300°C	400°C	427°C	MATL. SPECN
01	N920	2-V-N920-08145/1	24"-150C GV WCB BW MO SG	3-V-N805-23440 1-V-N805-05158R/01	30.0	20.0	20.0	14.2	10.4	6.6	5.6	ASTM A216 WCB

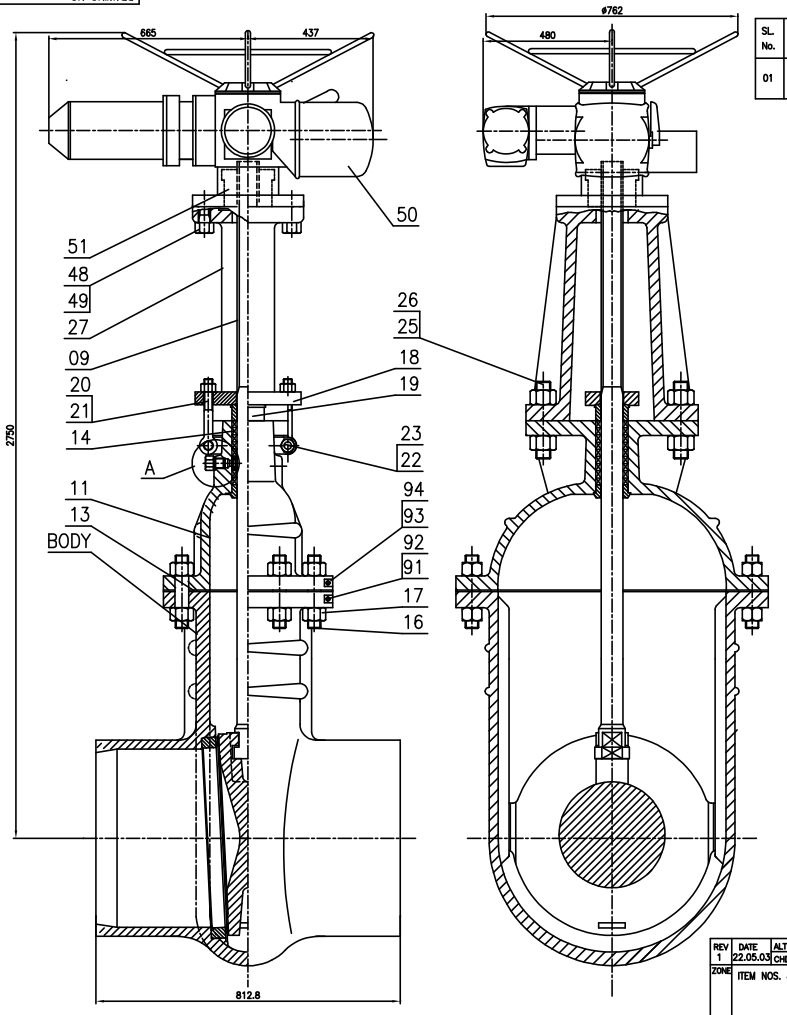

DETAIL – A

SEALED GLAND

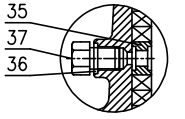

NOTES:

1. ASSEMBLY AND INSPECTION SHALL BE AS PER LATEST APPLICABLE QUALITY WORK INSTRUCTION
2. EDGE PREPARATION SHALL AS PER CUSTOMER'S REQUIREMENT.
3. ACTUATOR TO SUIT CUSTOMER'S REQUIREMENTS.

No OFF	DESCRIPTION	MATL CODE	MATL SPECN	HEAT TREATMENT	SCRAP SORT	NET WT (Kg)	GROSS WT (Kg)	DRAWING No	ITEM No

REV	DATE	ALTERED VB
1	22.05.03	CHD & APPD MRK
ZONE	ITEM NOS. & NOTE No.4 ADDED	
	DCP NO.800193	

CAUTION: The information on this document is the property of BHARAT HEAVY ELECTRICALS LTD. It must not be used directly or indirectly in any way detrimental to the interest of the company.

TYPE OF PRODUCT OR NAME OF CUSTOMER/PROJECT

RETRACED WITH REV.1 ON 22.05.03

BHARAT HEAVY ELECTRICALS LTD.
UNIT: HIGH PRESSURE BOILER PLANT.
TIRUCHIRAPALLI -620014.
365-120

	NAME	SIGN	DATE	NO.OF VAR.
DRN	V.BAIRAVAN		22.05.03	
CHD	R.L.NARAYANAN		22.05.03	
APPD	M.RAJAKUMAR		22.05.03	

DEPT VL
CODE 320

SCALE: N T S

WEIGHT (KG).

REFERENCE INFORMATIONS: CAD REF:C208145I

No. OF ITEMS

TITLE: GATE VALVE ASSEMBLY 24"/150 CL

CARD CODE: U 01

DRAWING NO. 2-V-N920-08145

REV 1

Size A2

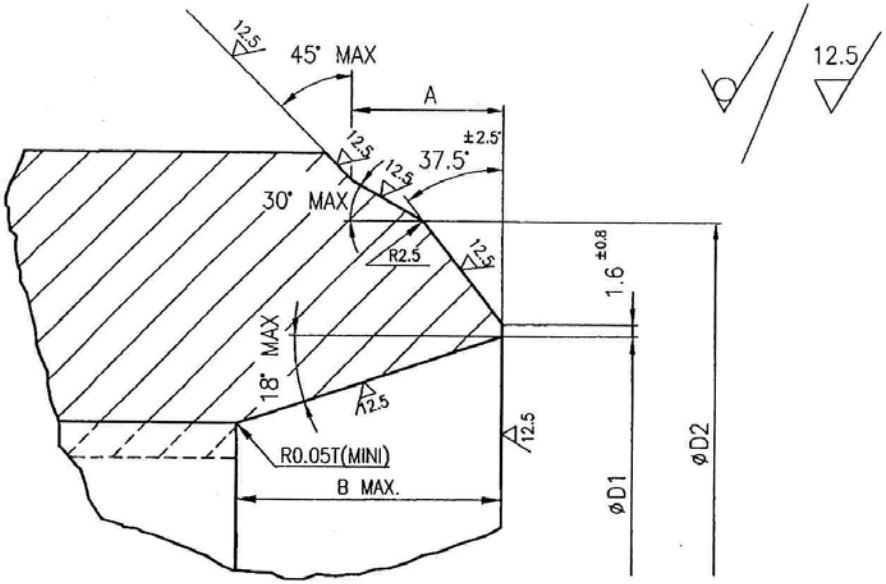

Sketch No. CAS – V – II – IVP – 110 CNC HB

Dimensions : ∅ D1 = 584 (± 1.6) ; ∅ D2 = 619 (+4.0, -0.8) ; A = 19 ; B (Max) = 25

The Edge Preparation at the time of prove-out may vary.

WELD EDGE PREPARATION – 24" / 150 # GV .

DRAWING NO.

ALL DIMENSIONS ARE IN MILLIMETRES. FOR TOLERANCES OF UNTOLERANCED DIMENSIONS DURING MANUFACTURE REFER RELEVANT QCP / QP

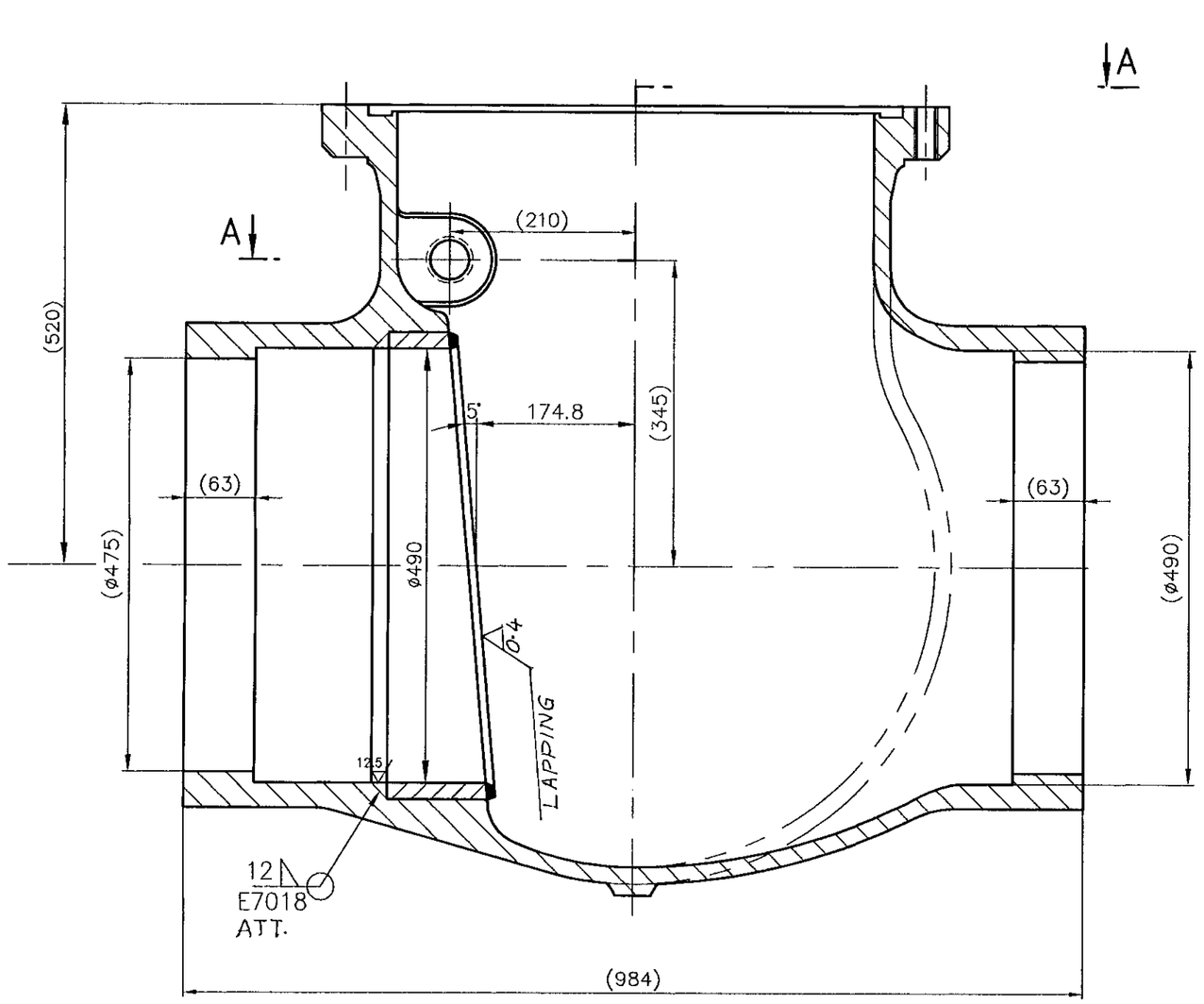

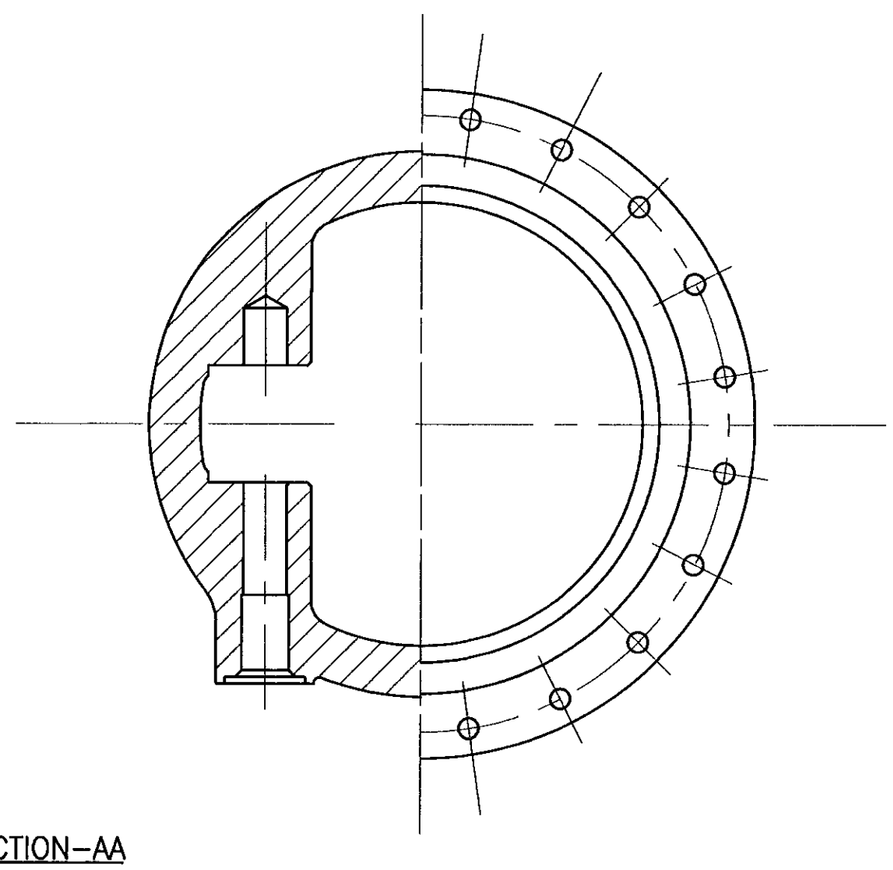

SECTION–AA

1 ✓ 12.5 , 3.2

NOTES:

1. APPLICABLE LATEST QUALITY PROCEDURE SHALL BE FOLLOWED IN ALL RESPECTS.

S.NO	DRAWING NO.	COMP CODE	CASTING DRG NO	CASTING COMP CODE	MATL. SPEC.	SCRAP
01	2VZ02117269/01	931177460000	2VZ02117266R/00	921526210000	A216 WCB NR ATT.	10

No OFF	DESCRIPTION	MATL CODE	MATL SPECN	HEAT TREATMENT	SCRAP SORT	NET WT (kg)	GROSS WT (kg)	DRAWING No	ITEM No

TYPE OF PRODUCT
OR NAME OF
CUSTOMER/PROJECT

BHARAT HEAVY ELECTRICALS LTD.,
UNIT: HIGH PRESSURE BOILER PLANT.
TIRUCHIRAPALLI-620014.
365-120

	NAME	SIGN	DATE	NO.OF VAR.
DRN	MPS	mps		
CHD	PRK			
APPD	SCS		17.09.99	

DEPT V L
CODE 320
SCALE NTS
WEIGHT (KG). 476
REFERENCE INFORMATIONS
CAD REF: Q217269
NO. OF ITEMS

TITLE
BODY ASSY.
(20"/150C NRV)

CARD CODE U 01

DRAWING NO. 2-V-Z021-17269

REV 01

REV	DATE	ALTERED MPS mps
01	6.1.01	CHD & APPD PRK
ZONE	ELECTRODE No. GIVEN. LAPPING M/c SYMBOL GIVEN. DCN: QN:0704.	

CAUTION: The information on this document is the property of BHARAT HEAVY ELECTRICALS LTD. It must not be used directly or indirectly in any way detrimental to the interest of the company.

Size A2

CORPORATE DRG ID
TP-DG-2-V-Z021-17269

CORPORATE DRG ID
TP-DG-2-V-Z021-17269

ALL DIMENSIONS ARE IN MILLIMETRES. FOR TOLERANCES OF UNTOLERANCED DIMENSIONS DURING MANUFACTURE REFER RELEVANT QCP / QP.

DRAWING NO.

2

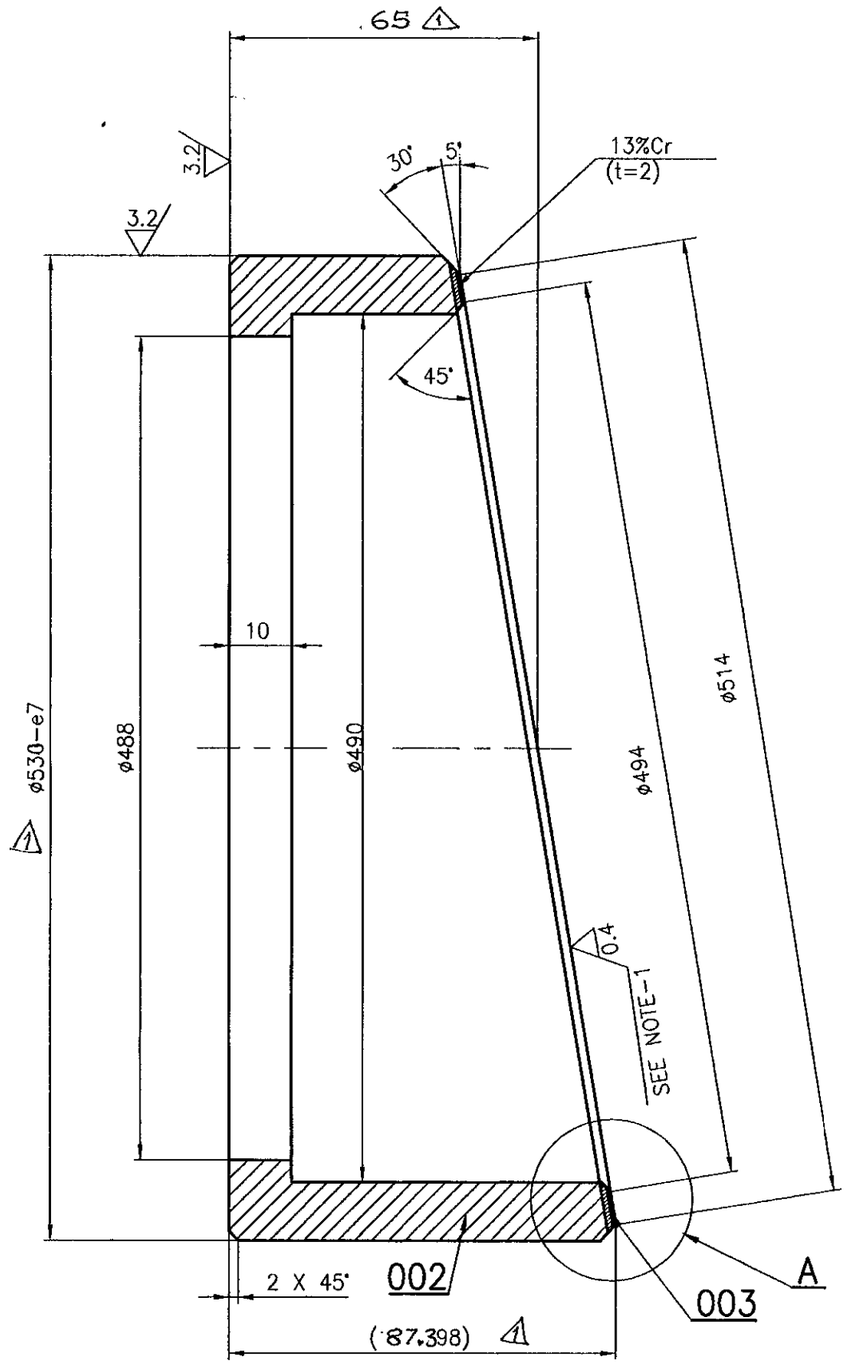

DETAIL-A

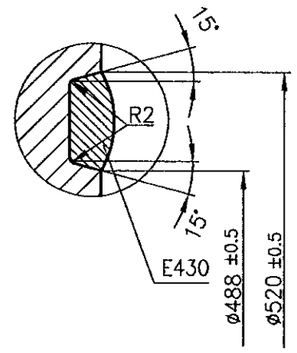

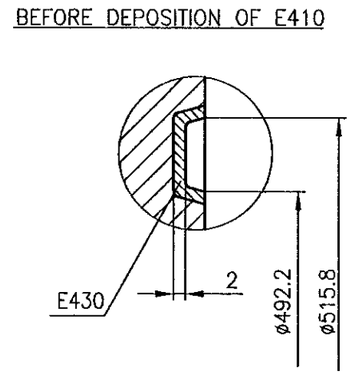

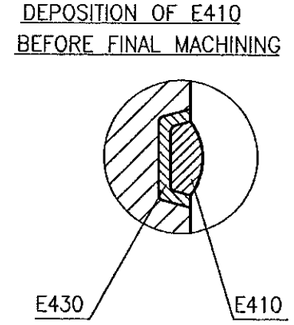

12.5 / 3.2 , 0.4

ø530-e7	-0.145
	-0.215

DETAIL-A

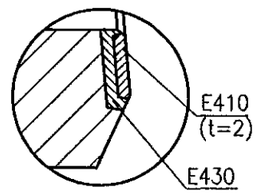

NOTES:

1. LAPPING TO BE DONE AFTER WELDING SEAT WITH BODY.
2. APPLICABLE LATEST QUALITY PROCEDURE SHALL BE FOLLOWED IN ALL RESPECTS.
3. SEAT HARDNESS 350 TO 400 BHN

NO OFF	DESCRIPTION	MATL CODE	MATL SPECN	HEAT TREATMENT	SCRAP SORT	NET WT (kg)	GROSS WT (kg)	DRAWING No	ITEM No
--	WELD DEPOSIT		E430 BUFFER LAYER	E410 FINAL LAYER	-	0.63	0.89	--	003
--		931177490000	A105 P.ATT	NR	10			--	002

REV	DATE	ALTERED
01	8.1.01	CHD & APPD

DIMNS 65, 87.398 & ø530
WERE 102.4, 124.798 & ø536

DCN: QN: 0703

CAUTION: The information on this document is the property of BHARAT HEAVY ELECTRICALS LTD. It must not be used directly or indirectly in any way detrimental to the interest of the company.

TYPE OF PRODUCT
OR NAME OF
CUSTOMER/PROJECT

BHARAT HEAVY ELECTRICALS LTD.,
UNIT: HIGH PRESSURE BOILER PLANT.
TIRUCHIRAPALLI-620014.
365-121

	NAME	SIGN	DATE	NO. OF VAR.
DRN	M P S			
CHD	P R K			
APPD	S C S		17.9.99	

DEPT	SCALE	WEIGHT (KG).	REFERENCE INFORMATIONS	NO. OF ITEMS
VL	N.T.S	30.5		
CODE 320				

TITLE	CARD CODE	DRAWING NO.	REV
SEAT (20"/150C-NRV)	U 01	3-V-Z021-22678	01

01

Size A3

DRAWING NO.

ALL DIMENSIONS ARE IN MILLIMETRES. FOR TOLERANCES OF UNTOLERANCED DIMENSIONS DURING MANUFACTURE REFER RELEVANT QCP / QP

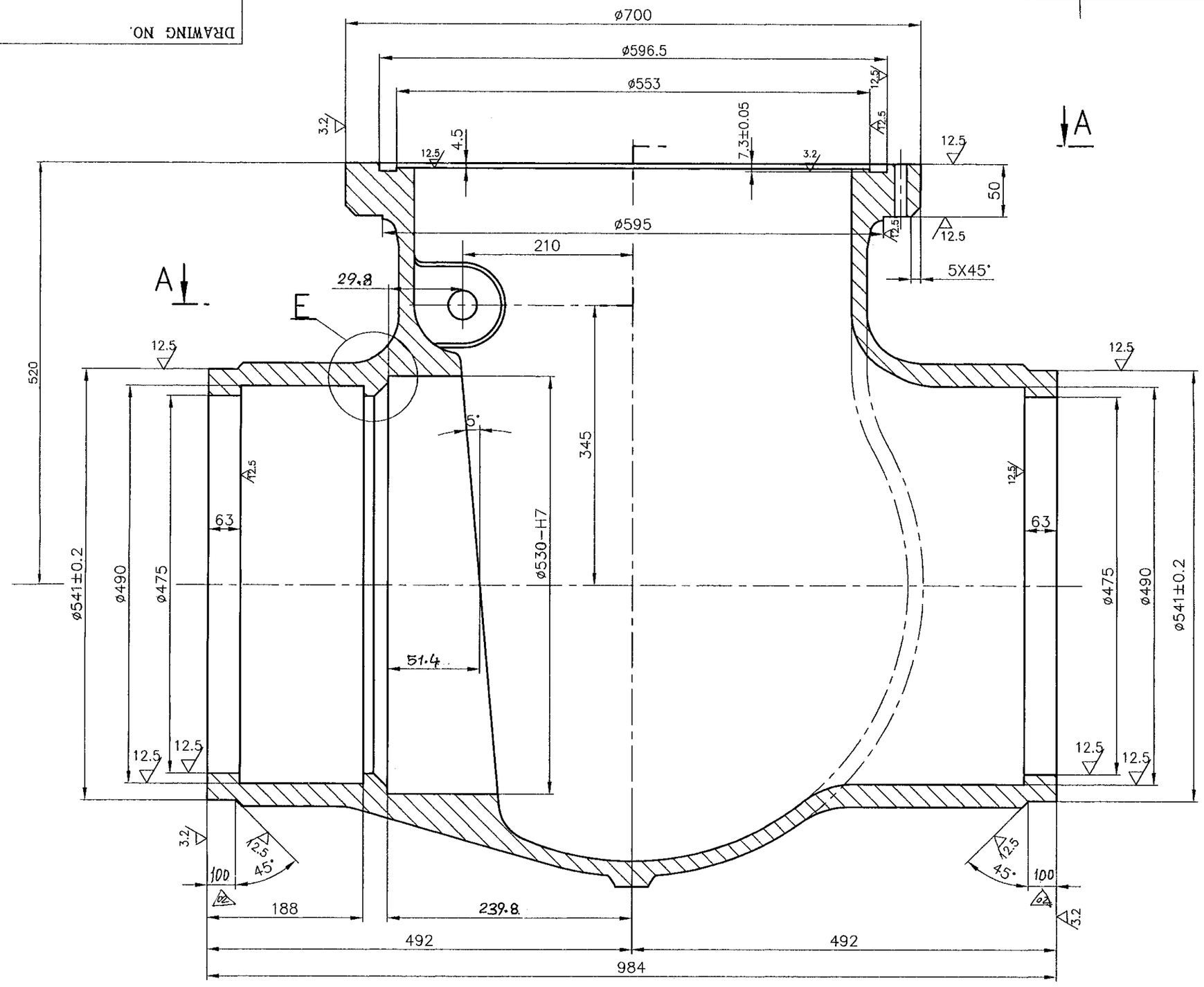

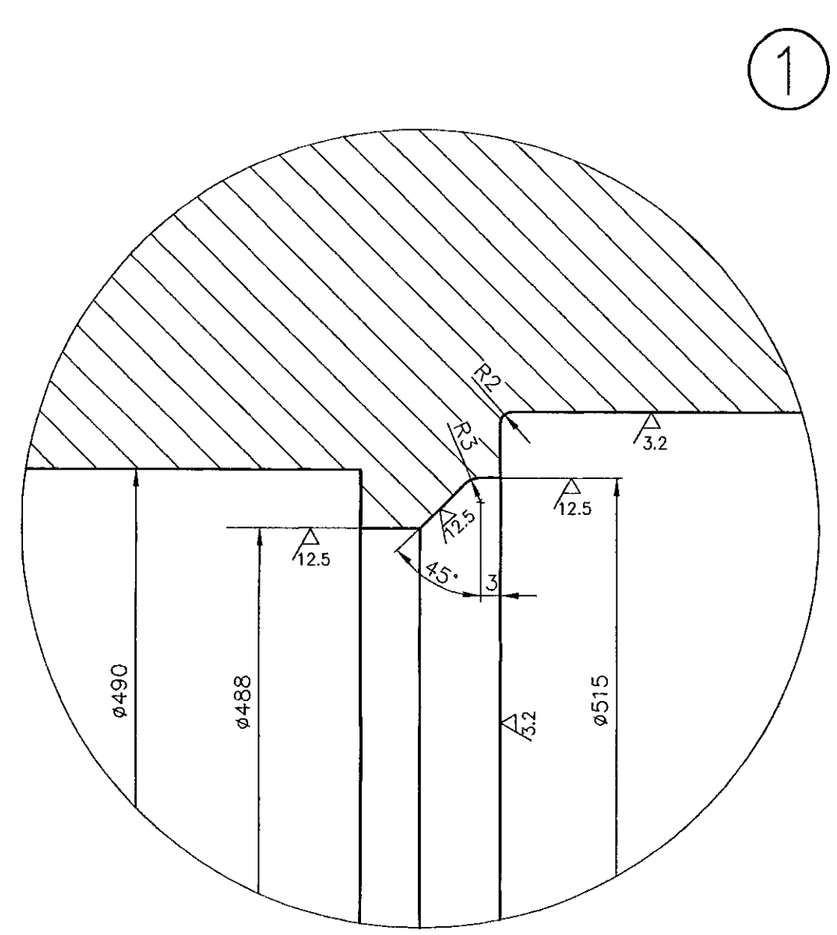

ø530-H7	+0.070
	0

DETAIL-E

NOTES:-

1. APPLICABLE LATEST QUALITY PROCEDURE SHALL BE FOLLOWED IN ALL RESPECTS.

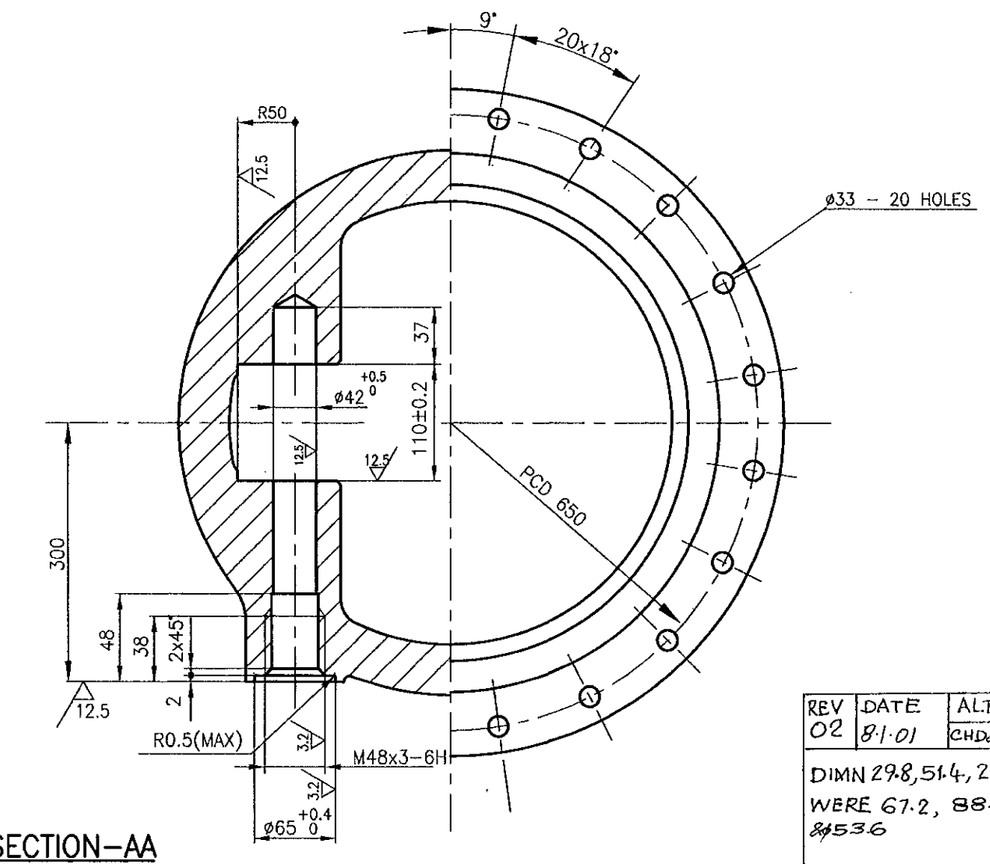

SECTION-AA

COMPONENT CODE: 931177468000

No OFF	DESCRIPTION	MATL CODE	MATL SPECN	HEAT TREATMENT	SCRAP SORT	NET WT (kg)	GROSS WT (kg)	DRAWING No	ITEM No

TYPE OF PRODUCT
OR NAME OF
CUSTOMER/PROJECT

BHARAT HEAVY ELECTRICALS LTD.,
UNIT: HIGH PRESSURE BOILER PLANT.
TIRUCHIRAPALLI-620014.
365-120

	NAME	SIGN	DATE	NO. OF VAR.
DRN	MPS	mps		
CHD	PRK			
APPD	SCS		17.9.99	

DEPT VL
CODE 320
SCALE NTS
WEIGHT (KG). ---
REFERENCE INFORMATIONS
NO. OF ITEMS

TITLE
BODY ROUGH
20"/150C NRV

CARD CODE U 01

DRAWING NO. 2-V-Z021-17270

REV 02

REV	DATE	ALTD: MPS mps	REV	DATE	ALTERED MPS mps
02	8.1.01	CHD&APPD:	01	12.9.2000	CHD & APPD: PRK

DIMN 29.8, 51.4, 239.8, 100 & ø530 WERE 67.2, 88.8, 277.2 & 65 & ø536

DCN:QN:0703

ZONE 93 COMPONENT CODE 931177468000 WAS 931177464000

DCN:QN:0690

CAUTION: The information on this document is the property of BHARAT HEAVY ELECTRICALS LTD. It must not be used directly or indirectly in any way detrimental to the interest of the company.

Size A2

CORPORATE DRG ID
TP-DG-2-V-Z021-17270

CORPORATE DRG ID
TP-DG-2-V-Z021-17270

DRAWING NO.

ALL DIMENSIONS ARE IN MILLIMETRES. FOR TOLERANCES OF UNTOLERANCED DIMENSIONS DURING MANUFACTURE REFER RELEVANT QCP / QP

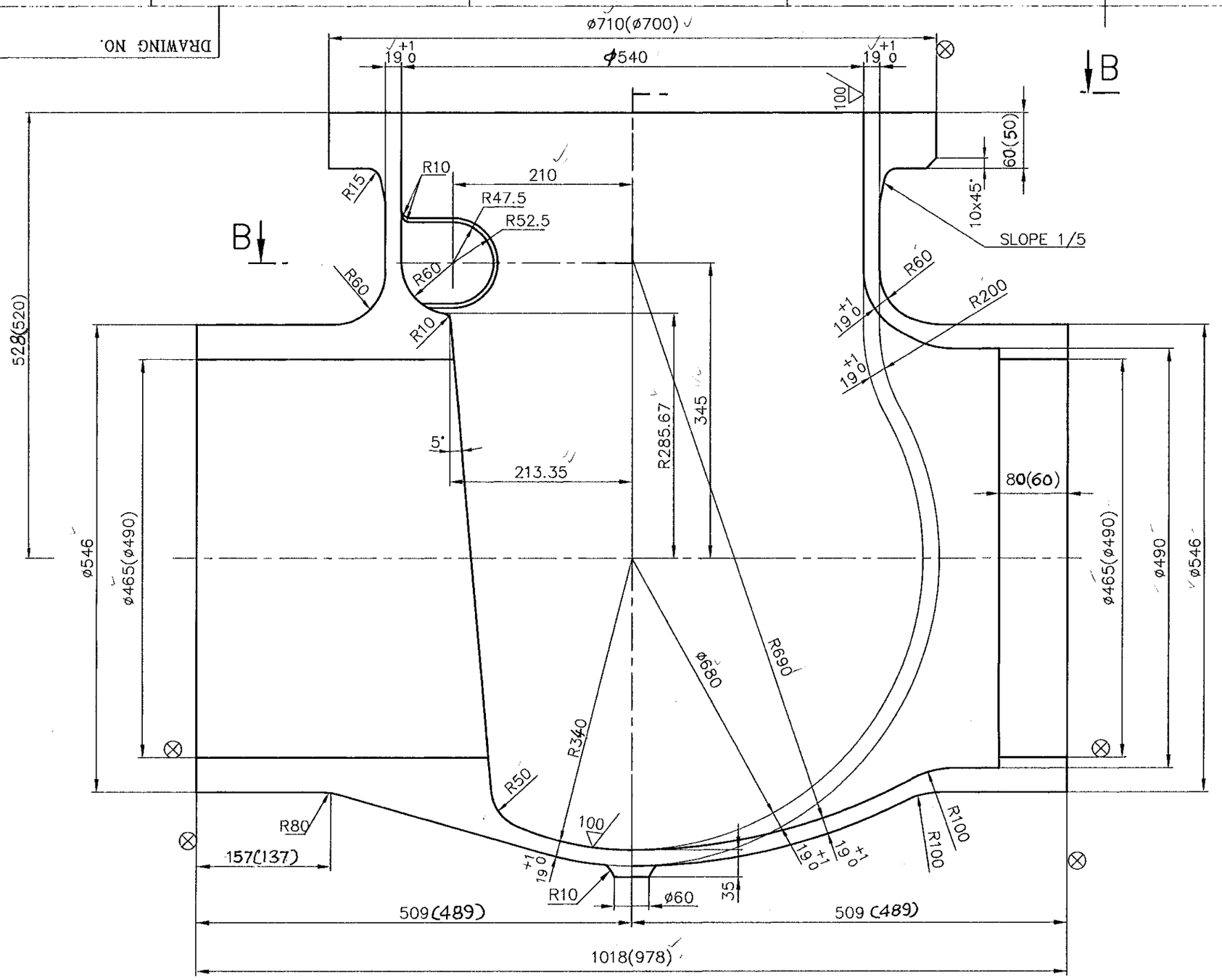

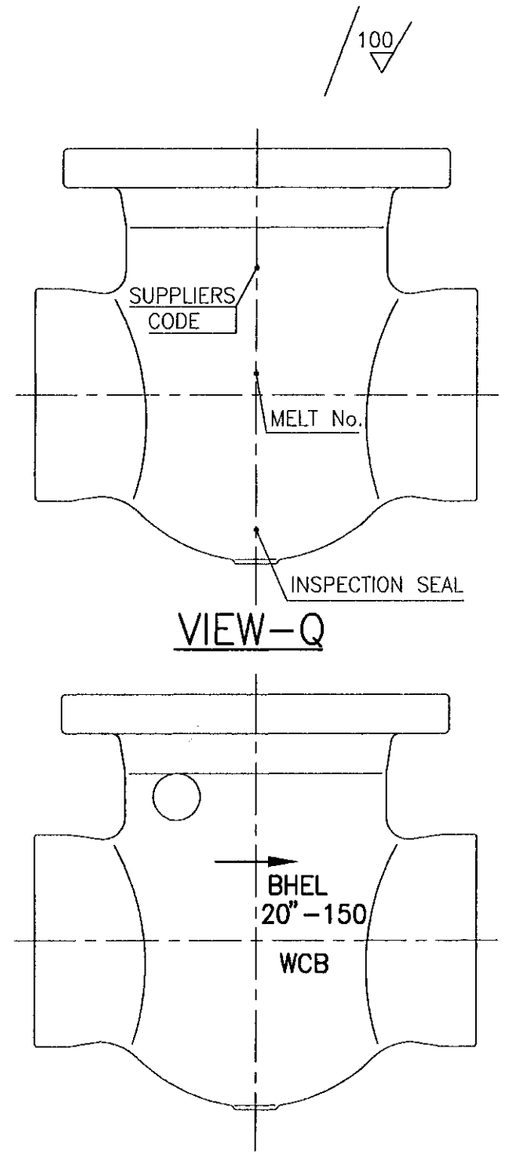

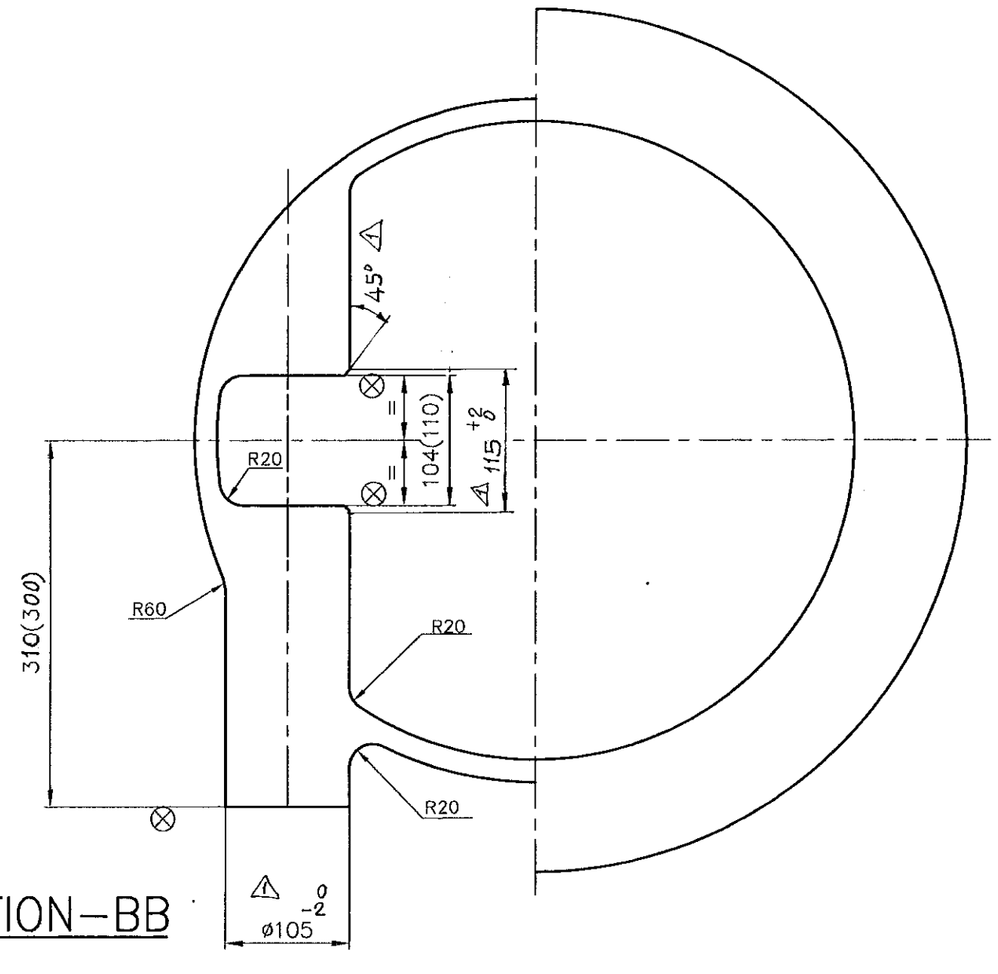

SECTION–BB

NOTES:–

1 . NECESSARY MACHINING ALLOWANCES HAVE BEEN ADDED ON ALL MACHINABLE SURFACES

2 . PERMISIBLE DEVIATIONS OF NON TOLERANCED CASTING DIMENSIONS – REFER APPLICABLE TDC

3 . FINISHED MACHINED DIMENSIONS ARE INDICATED WITHIN BRACKETS FOR INFORMATION

4 . 100 CASTING SURFACES MUST BE HIGH QUALITY WITHOUT SURFACE UNEVENNESS

5 . ALL DETAILS SHOWN IN VIEWS 'P' & 'Q' EXCEPT MELT No. AND INSPECTION SEAL ARE TO BE CAST.

6 . CASTING SHALL COMPLY WITH THE REQUIREMENTS OF APPLICABLE TDC.

7 . UNSPECIFIED CASTING RADII 3 – 5 MM

8 . HEIGHT OF CASTING LETTERS 20MM

9 . ⊗ SURFACES TO BE MACHINED

No OFF	DESCRIPTION	MATL CODE	MATL SPECN	HEAT TREATMENT	SCRAP SORT	NET WT (kg)	GROSS WT (kg)	DRAWING No	ITEM No
--	--	92 152 621	ASTM A216 WCB ATTEST	NR	10	--	528	--	01

TYPE OF PRODUCT
OR NAME OF
CUSTOMER/PROJECT

BHARAT HEAVY ELECTRICALS LTD.,
UNIT: HIGH PRESSURE BOILER PLANT.
TIRUCHIRAPALLI-620014.
365–120

	NAME	SIGN	DATE	NO. OF VAR.
DRN	MPS	mps	5.07.99	
CHD	PRK			
APPD	SCS		9.7.99	

DEPT V L
CODE 320
SCALE NTS
WEIGHT (KG).
REFERENCE INFORMATIONS: CAD REF: Q217266R
NO. OF ITEMS

TITLE: BODY (20"–150C NRV)
CARD CODE: U 01
DRAWING NO. 2–V–Z021–17266R
REV 01

REV	DATE	ALTERED
01	20.2.01	MPS mps; CHD & APPD PRK
ZONE	DIMN 115 +2 0 AND CHAMFER 45° GIVEN. ø105 0 -2 WAS ø105	
	DCN: QN : 0713	

CAUTION: The information on this document is the property of BHARAT HEAVY ELECTRICALS LTD. It must not be used directly or indirectly in any way detrimental to the interest of the company.

Size A2

CORPORATE DRG ID
TP-DG-2-V-Z021-17266R

CORPORATE DRG ID
TP-DG-2-V-Z021-17266R

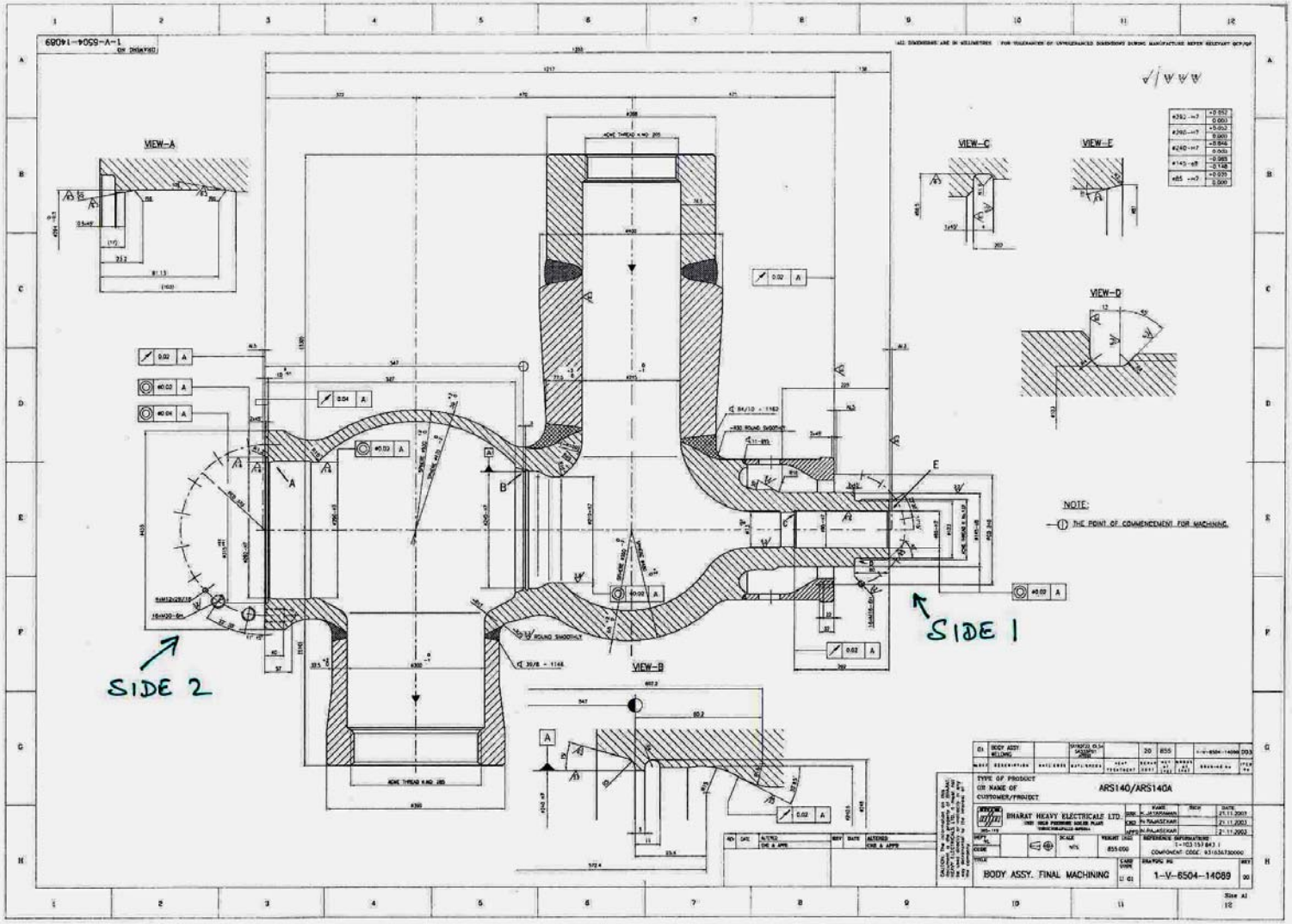
VIEW-A
VIEW-B
VIEW-C
VIEW-D
VIEW-E
SIDE 1
SIDE 2
NOTE:
THE POINT OF COMMENCEMENT FOR MACHINING.
TYPE OF PRODUCT OR NAME OF CUSTOMER/PRODUCT
ARS140/ARS140A
BHARAT HEAVY ELECTRICALS LTD.
BODY ASSY. FINAL MACHINING
1-V-6504-14089

PROVE-OUT MACHINING NOTES FOR DRG. No. 1 – V – 6504 – 14089

Machining prove-out on sides 1 & 2 only.

Machining on side 1

1.ID machining ∅ 73 (-0.0 , + 0.2)

2. ID machining View C

3.ID machining ∅ 85 H7

4. ID machining View E

5. OD turning ∅ 145 e8 to a length of ~ 225

6. OD machining View D

7. External "ACME THREAD K No. 132" excluded from prove-out – Thread boss to be machined to OD 132.

8. Bolt holes drilling & tapping 16 X M16-6H on PCD 240

9. Flange facing and chamfering 2 X 45 deg. (ref drg. No. 3 V 6504 03541)

Machining on side 2

1. ID machining ∅ 315 (+0.1, + 0.2)

2. ID machining ∅ 292 H7

3. ID machining View A

4. ID machining ∅ 290 H7

5. ID machining View B at a depth of ~ 607.2

6. ID machining ∅ 210 H7 merging with R10

7. OD turning to length of ~ 45 mm & facing flange ∅ 435

8. 16 X M30 – 6H on PCD 370

9. 4 X M12 on PCD 370

LIST OF DRAWINGS ATTACHED FOR PROVE OUT

FOR TIRUCHY - (TENDER SL.NO. 10)

Sl. No.	Drawing No.	Description
1	1 V 4745 03360	Body Tubing Spool
2	1 V 6504 14089	ARS 140 – Body Assy. Final M/Cing.
3	1 V 6504 14090	ARS 140 – Body Assy. Welding
4	3 V 6504 03541	ARS 140 – Flange
5	2 V 0000 17517	24” – 600 - CRHNRV Assy.
6	2 V 0000 17518	24” – 600 – CRHNRV BODY Assy
7	4 V L753 20368	24” – 600 – Edge Preparation

FOR IVP GOINDWAL - (TENDER SL.NO. 20)

Sl. No.	Drawing No.	Description
1	3 V N805 23440	24”-150 –GV – Body Assy.
2	3 V N361 17206	24”-150 –GV – Seat Ring Assy.
3	1 V 805 05160	24”-150 –GV – Body
4	1 V N805 05158R	24”-150 –GV – Body
5	2 V 920 08145	24”-150 –GV – Gate Valve Assy
6	CAS – V-II-IVP-110 CNC HB	24”-150 –GV – Weld Edge Preparation
7	2 V Z021 17269	20”-150-FV- Body Assy
8	3 V Z021 22678	20”-150-FV- Seat
9	2 V Z021 17270	20”-150-FV- Body Rough
10	2 V Z021 17266R	Body