DRAWING NO. 1-V-4745-03360

ALL DIMENSIONS ARE IN MILLIMETRES. FOR TOLERANCES OF UNTOLERANCED DIMENSIONS DURING MANUFACTURE REFER RELEVANT QCP/QP

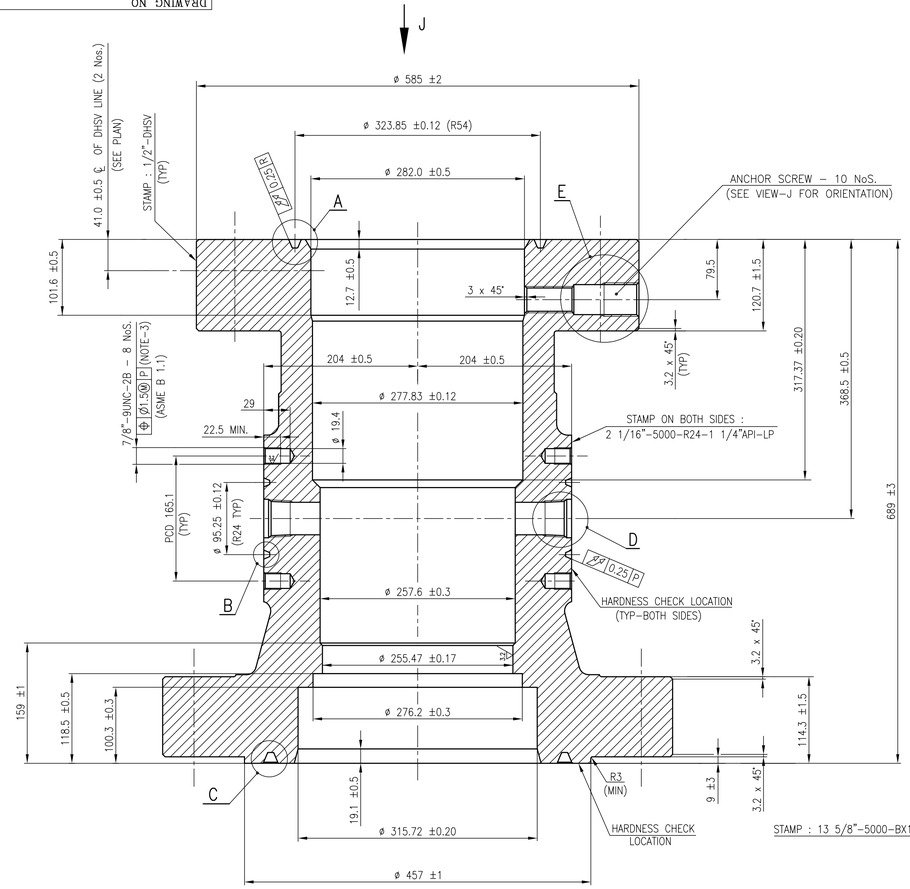


SECTION – XX

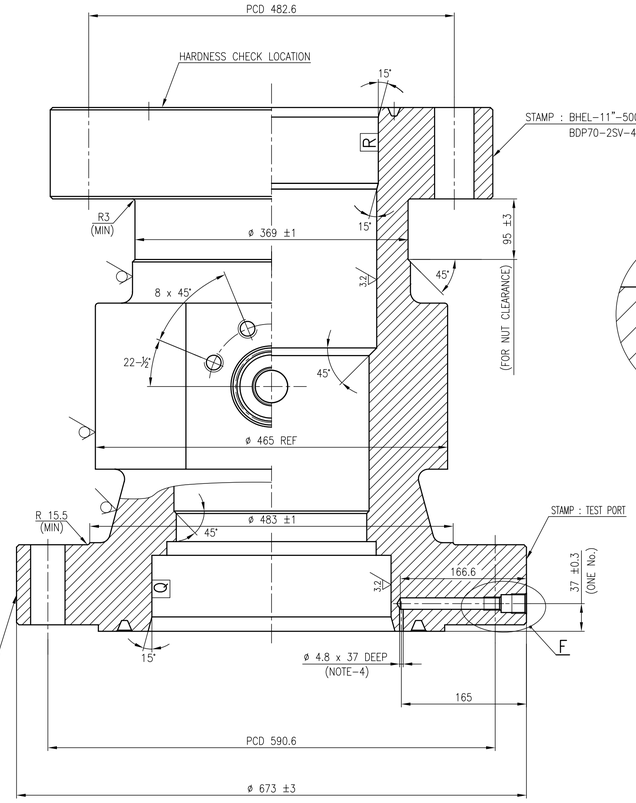


SECTION – YY

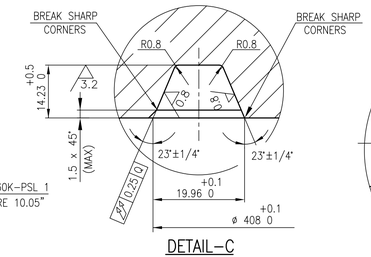


DETAIL–C

BX–160 (NTS)

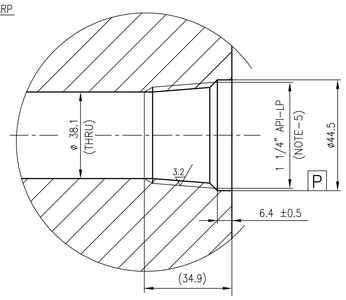


DETAIL–D

(TYP)

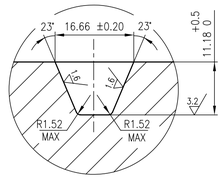


DETAIL–A

R54 (NTS)

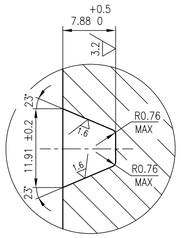


DETAIL–B

R24 (NTS)

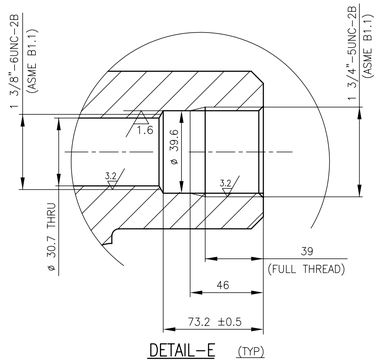


DETAIL–E (TYP)

(ANCHOR SCREW PORTS – 10 No.S)

## NOTES:–

1. UNSPECIFIED MACHINING TOLERANCE ±0.25
2. UNSPECIFIED ANGLE TOLERANCE ±1/2°
3. BOLT HOLES SHALL BE EQUALLY SPACED AND STRADDLE WITH RESPECT TO COMMON CENTRE LINES.
4. HOLES MUST INTERSECT FOR TEST PORT.
5. THREADING & GAUGING SHALL BE DONE AS PER API–5B & API–6A
6. COAT : INDOOR RUST PREVENTIVE COATING.

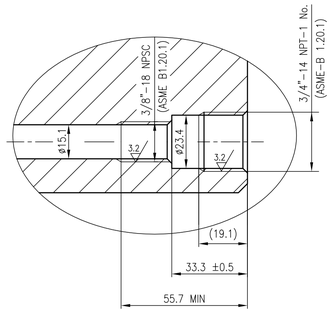


DETAIL–F

ONE TEST PORT AT 90° FROM OUTLETS

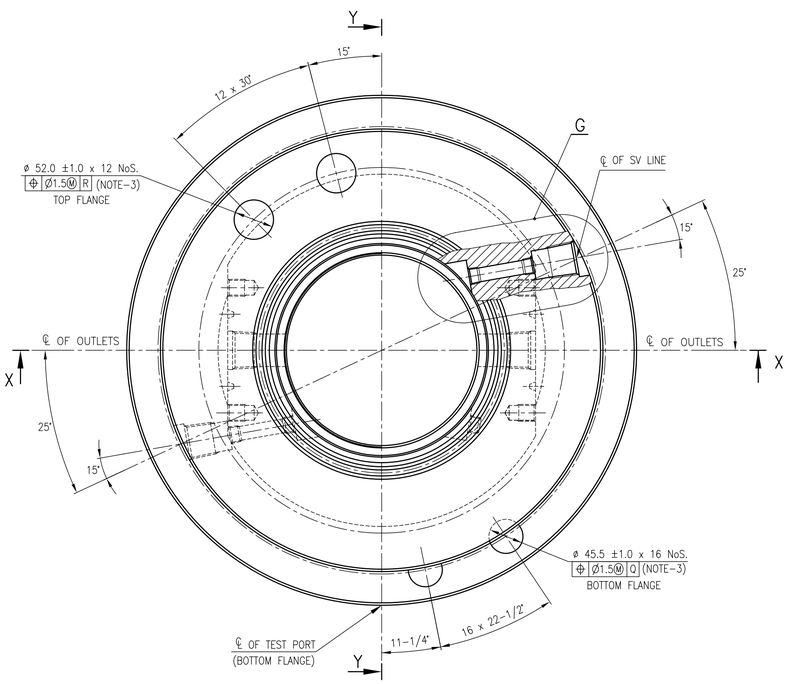


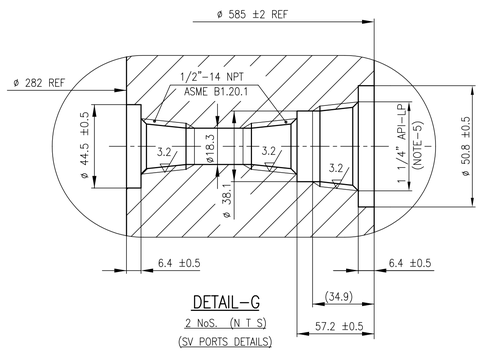


DETAIL–G

2 NoS. (N T S)

(SV PORTS DETAILS)

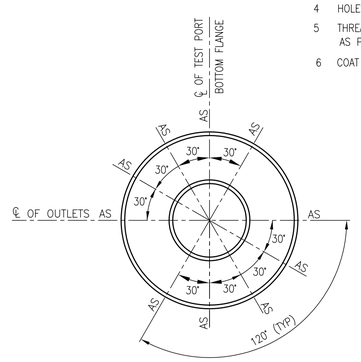


VIEW – J

AS = ANCHOR SCREW POSITIONS – 10 NoS.

(TOP FLANGE)

N T S

PSL–1

TEMP. RATING : PU

MATL. CLASS : BB

CAD REF No. o103360 — COMPONENT CODE : 93 182 244 0000

| No OFF | DESCRIPTION | MATL CODE | MATL SPECN | HEAT TREATMENT | SCRAP SORT | NET WT (kg) | GROSS WT (kg) | DRAWING No | ITEM No |
|---|---|---|---|---|---|---|---|---|---|
| | FORGING PROOF MACHINED | 92 158 195 | AISI–4130–60K PRODUCT ATTEST | Q & T | 20 | 595 | 843 | 4745 | 001 |

| UNLESS OTHERWISE SPECIFIED | |
|---|---|
| BREAK SHARP CORNERS | :0.25 |
| FILLET RADII | : 0.76±0.12 |
| CONCENTRICITY | : 0.25 FIM |
| SQUARNESS | : 0.25 IN 254 |
| PARALLELISM | : 0.25 IN 254 |
| RFS EXCEPT WHEN Ⓜ MODIFIED. | |

| DCP No. | ALTERED : | APPD : |
|---|---|---|
| 800822 | CHD : | DATE : 31–5–08 |

| REV | REVISED AND REDRAWN IN CAD |
|---|---|
| 02 | MATL. CODE : 92 158 195 WAS 92 158 772 |
| ZONE 6Z | |

CAUTION: The information on this document is the property of BHARAT HEAVY ELECTRICALS LTD. It must not be used directly or indirectly in any way detrimental to the interest of the company.

TYPE OF PRODUCT OR NAME OF CUSTOMER/PROJECT: 13 5/8"–5000 x 11"–5000 BDP70–W/2 SV (2 1/16"–5000 PSI SIDE OUTLETS)

BHARAT HEAVY ELECTRICALS LTD., UNIT: HIGH PRESSURE BOILER PLANT. TIRUCHIRAPALLI–620014. 365–119

| | NAME | SIGN | DATE |
|---|---|---|---|
| DRN | T.RAJARAMAN | | 31–5–08 |
| CHD | T.RAJARAMAN | | 31–5–08 |
| APPD | R.ELAYARAJA | | 31–5–08 |

| DEPT. | SCALE | WEIGHT (KG). | REFERENCE INFORMATIONS |
|---|---|---|---|
| VL CODE 340 | N T S | – | – |

| TITLE | CARD CODE | DRAWING NO. | REV |
|---|---|---|---|
| BODY–TUBING SPOOL | U 01 | 1–V–4745–03360 | 02 |

Size A1

© 12

DRAWING NO. 1-V-6504-14089

ALL DIMENSIONS ARE IN MILLIMETRES. FOR TOLERANCES OF UNTOLERANCED DIMENSIONS DURING MANUFACTURE REFER RELEVANT QCP/QP

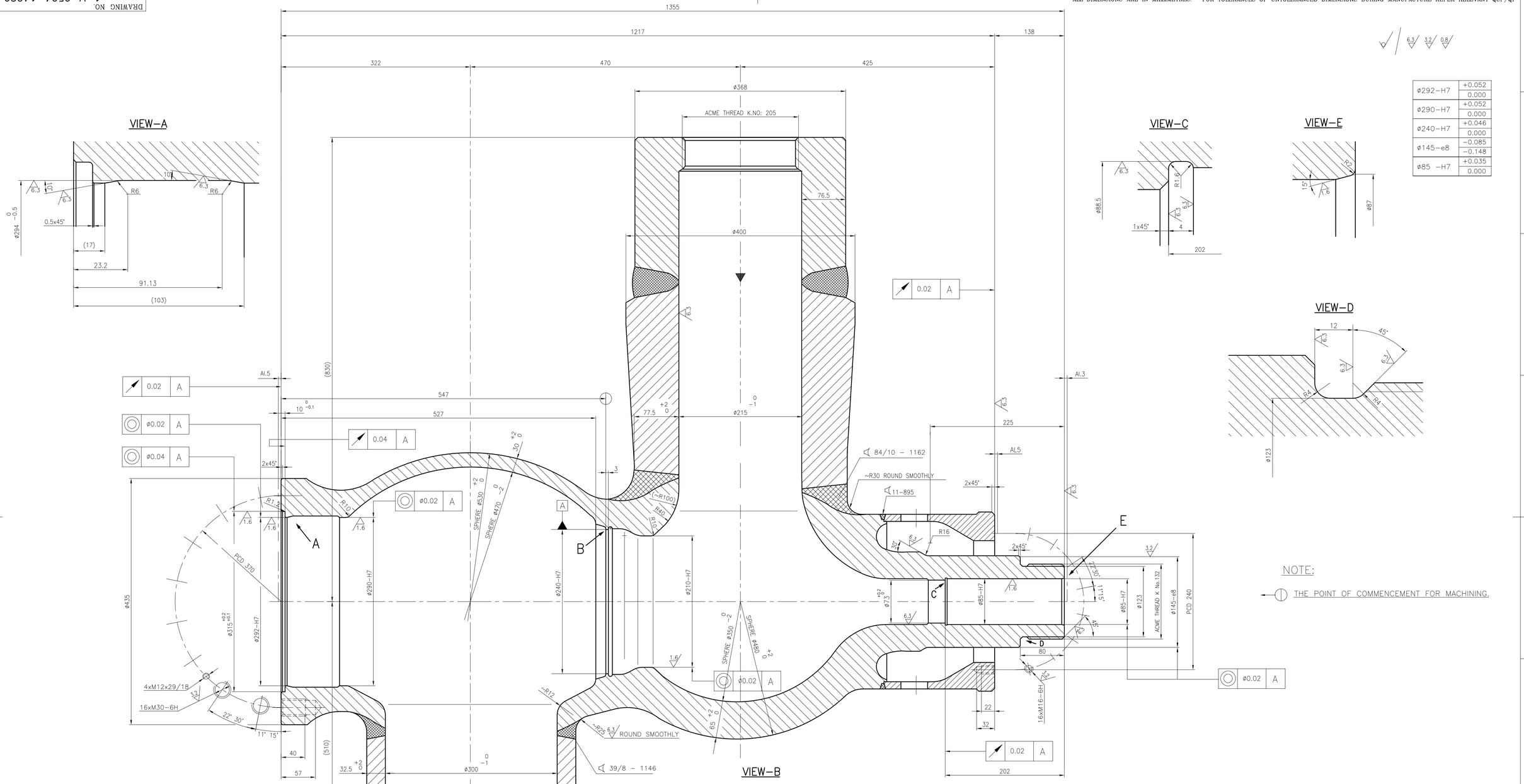


| | |
|---|---|
| ø292-H7 | +0.052 / 0.000 |
| ø290-H7 | +0.052 / 0.000 |
| ø240-H7 | +0.046 / 0.000 |
| ø145-e8 | -0.085 / -0.148 |
| ø85 -H7 | +0.035 / 0.000 |

NOTE:

THE POINT OF COMMENCEMENT FOR MACHINING.

| No OFF | DESCRIPTION | MATL CODE | MATL SPECN | HEAT TREATMENT | SCRAP SORT | NET WT (kg) | GROSS WT (kg) | DRAWING No | ITEM No |
|---|---|---|---|---|---|---|---|---|---|
| 01 | BODY ASSY. WELDING | | SA182F22 Cl.3+ SA335P91 ATTEST | | 20 | 855 | | 1-V-6504-14090 | 003 |

TYPE OF PRODUCT OR NAME OF CUSTOMER/PROJECT: ARS140/ARS140A

BHARAT HEAVY ELECTRICALS LTD., UNIT: HIGH PRESSURE BOILER PLANT. TIRUCHIRAPALLI-620014. 365-119

| | NAME | SIGN | DATE |
|---|---|---|---|
| DRN | K.JAYARAMAN | | 21.11.2003 |
| CHD | N.RAJASEKAR | | 21.11.2003 |
| APPD | N.RAJASEKAR | | 21.11.2003 |

| REV | DATE | ALTERED : CHD & APPD : | REV | DATE | ALTERED CHD & APPD |
|---|---|---|---|---|---|

CAUTION: The information on this document is the property of BHARAT HEAVY ELECTRICALS LTD. It must not be used directly or indirectly in any way detrimental to the interest of the company.

DEPT: VL

CODE

SCALE: NTS

WEIGHT (KG): 855.000

REFERENCE INFORMATIONS: 1-103.157.643 f

COMPONENT CODE: 931636730000

TITLE: BODY ASSY. FINAL MACHINING

CARD CODE: U 01

DRAWING NO.: 1-V-6504-14089

REV: 00

Size A1

DRAWING NO. 1-V-6504-14090

ALL DIMENSIONS ARE IN MILLIMETRES. FOR TOLERANCES OF UNTOLERANCED DIMENSIONS DURING MANUFACTURE REFER RELEVANT QCP/QP

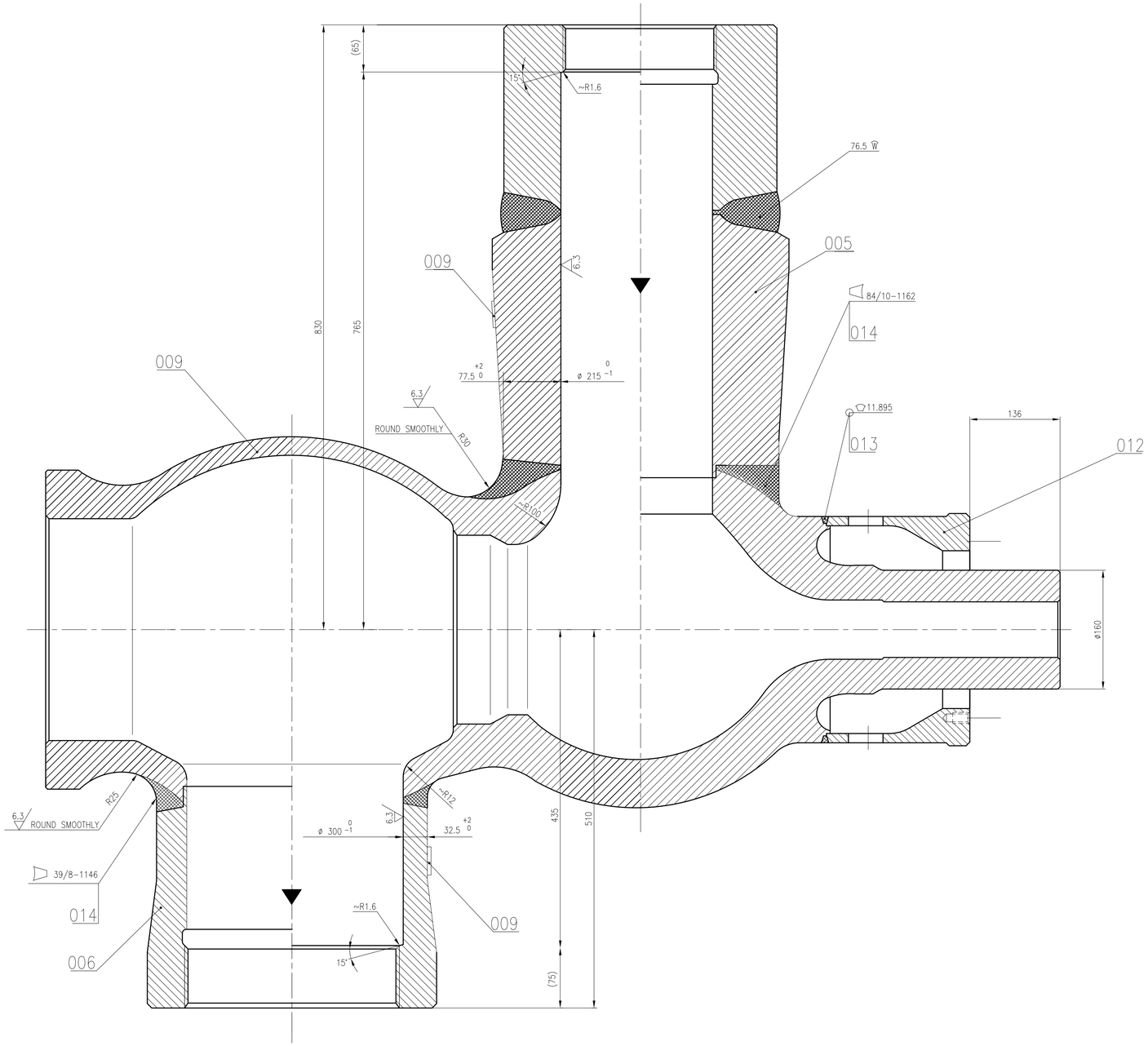


| No OFF | DESCRIPTION | MATL CODE | MATL SPECN | HEAT TREATMENT | SCRAP SORT | NET WT (kg) | GROSS WT (kg) | DRAWING No | ITEM No |
|---|---|---|---|---|---|---|---|---|---|
| | JOINING WELD | | | | | | | | 014 |
| | JOINING WELD | | | | | | | | 013 |
| 01 | FLANGE | | SA182 F22Cl.3 PRODUCTATTEST | | | 121.6 | | 3-V-6504-03541 | 012 |
| 02 | NAME PLATE FOR WELD | | | | | 0.022 | | BPS-017521 | 009 |
| 01 | OUTLET NOZZLE | | SA182 F22Cl.3 ATTEST | | | 114 | | 2-V-6068-02263 | 006 |
| 01 | INLET NOZZLE ASSY. | | SA182 F22Cl.3 ATTEST SA 335 P91 | | | 396 | | 3-V-6100-03514 | 005 |
| 01 | BODY PRE M/C | | SA182 F22Cl.3 ATTEST | | | 505 | | 1-V-6068-01688 | 004 |

| REV | DATE | ALTERED |
|---|---|---|
| | | CHD & APPD |

CAUTION: The information on this document is the property of BHARAT HEAVY ELECTRICALS LTD. It must not be used directly or indirectly in any way detrimental to the interest of the company.

TYPE OF PRODUCT OR NAME OF CUSTOMER/PROJECT: ARS140/ARS140A

BHARAT HEAVY ELECTRICALS LTD., UNIT: HIGH PRESSURE BOILER PLANT. TIRUCHIRAPALLI-620014.

365-119

| | NAME | SIGN | DATE |
|---|---|---|---|
| DRN | K.JAYARAMAN | | 21.11.2003 |
| CHD | N.RAJASEKAR | | 21.11.2003 |
| APPD | N.RAJASEKAR | | 21.11.2003 |

DEPT. VL

CODE

SCALE: NTS

WEIGHT (KG): 1040.000

REFERENCE INFORMATIONS: 1-V-6100-14040

COMPONENT CODE: 931636740000

TITLE: BODY - ASSEMBLY WELDING

CARD CODE: U 01

DRAWING NO.: 1-V-6504-14090

REV: 00

Size A1

ALL DIMENSIONS ARE IN MILLIMETRES. FOR TOLERANCES OF UNTOLERANCED DIMENSIONS DURING MANUFACTURE REFER RELEVANT QCP / QP.

DRAWING NO. 3-V-6504-03541

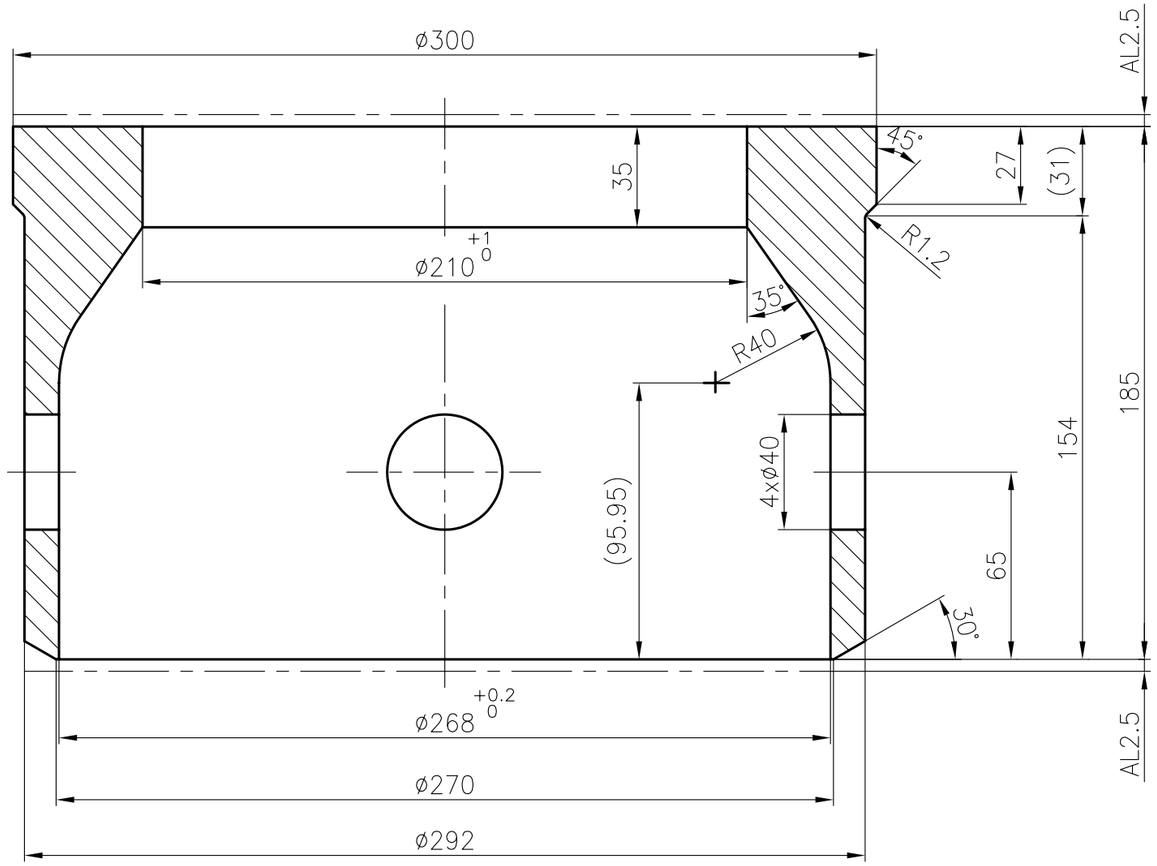


| NO OFF | DESCRIPTION | MATL CODE | MATL SPECN | HEAT TREATMENT | SCRAP SORT | NET WT (kg) | GROSS WT (kg) | DRAWING No | ITEM No |
|---|---|---|---|---|---|---|---|---|---|
| 1 | FLANGE FORGING | | SA182 F22 Cl.3 PRODUCT ATTEST | HARDENED & TEMPERED | | 25.5 | | 4V650425167F | 001 |

TYPE OF PRODUCT OR NAME OF CUSTOMER/PROJECT: ARS140/ARS140A

BHARAT HEAVY ELECTRICALS LTD.,
UNIT: HIGH PRESSURE BOILER PLANT.
TIRUCHIRAPALLI-620014.
365-121

| | NAME | SIGN | DATE | NO.OF VAR. |
|---|---|---|---|---|
| DRN | K.JAYARAMAN | | 21.11.2003 | |
| CHD | N.RAJASEKAR | | 21.11.2003 | |
| APPD | N.RAJASEKAR | | 21.11.2003 | |

DEPT: VL
CODE:
SCALE: N.T.S
WEIGHT (KG).: 25.5
REFERENCE INFORMATIONS: 2-103.156.613 a
COMPONENT CODE: 931636810000
NO. OF ITEMS:

TITLE: FLANGE
CARD CODE: U 01
DRAWING NO.: 3-V-6504-03541
REV: 00

| REV | DATE | ALTERED |
|---|---|---|
| | | CHD & APPD |

CAUTION: The information on this document is the property of BHARAT HEAVY ELECTRICALS LTD. It must not be used directly or indirectly in any way detrimental to the interest of the company.

Size A3

DRAWING NO. 2-V-0000-175517

ALL DIMENSIONS ARE IN MILLIMETRES. FOR TOLERANCES OF UNTOLERANCED DIMENSIONS DURING MANUFACTURE REFER RELEVANT QCP / QP

| Sl. No. | TYPE No. | DRAWING No. | PRESSURE TEMPERATURE RATINGS 38 °C | 200°C | 300°C | 500°C | 550°C | HYDRAULIC TEST PRESSURE SHELL | SEAT | MATERIAL SPEC. | BODY (ITEM.NO:1) ASSY. DRG | CASTING DRG | BONNET (ITEM.NO:2) FINISHED DRG | FORGING DRG | DRAIN NOZZLE (ITEM.NO:3) | * BOM DOCUMENT No. FOR INFORMATION ONLY |
|---|---|---|---|---|---|---|---|---|---|---|---|---|---|---|---|---|
| 01 | A4724B60BH | 2VL75317517/00 | 105.5 (kg/cm²) | 97.7 (kg/cm²) | 87.5 (kg/cm²) | 51.6 (kg/cm²) | 25.9 (kg/cm²) | 158.25 (kg/cm²) | 105.5 (kg/cm²) | A217WC6 | 2VL75317518/00 | 2VL75317519R/00 | 3VL75122407/01 | 3VL75122399P/02 | 3VL80522027/03 | 4-A4724B60BH |
| 02 | A4724B60CH | 2VL75417517/00 | 105.5 (kg/cm²) | 99.4 (kg/cm²) | 87.5 (kg/cm²) | 51.8 (kg/cm²) | 31.3 (kg/cm²) | 158.25 (kg/cm²) | 105.5 (kg/cm²) | A217WC9 | 2VL75417518/00 | 2VL75417519R/00 | | | | 4-A4724B60CH |

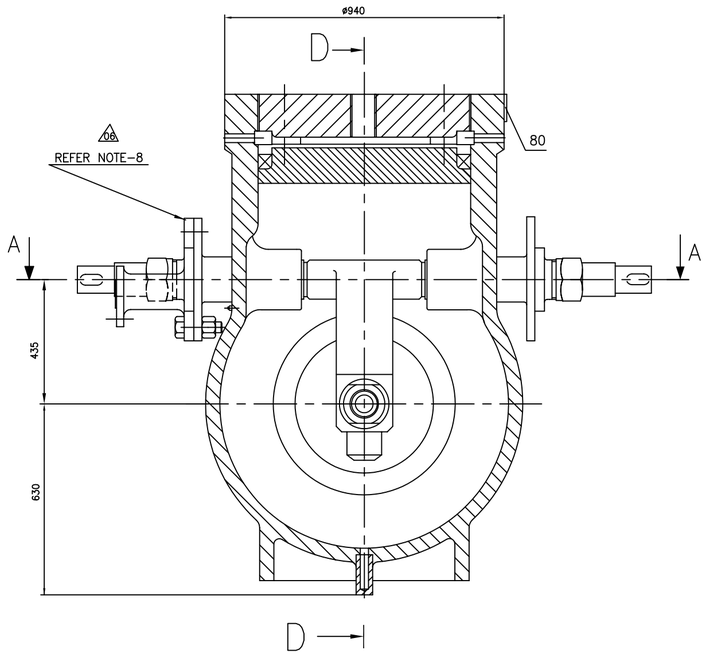


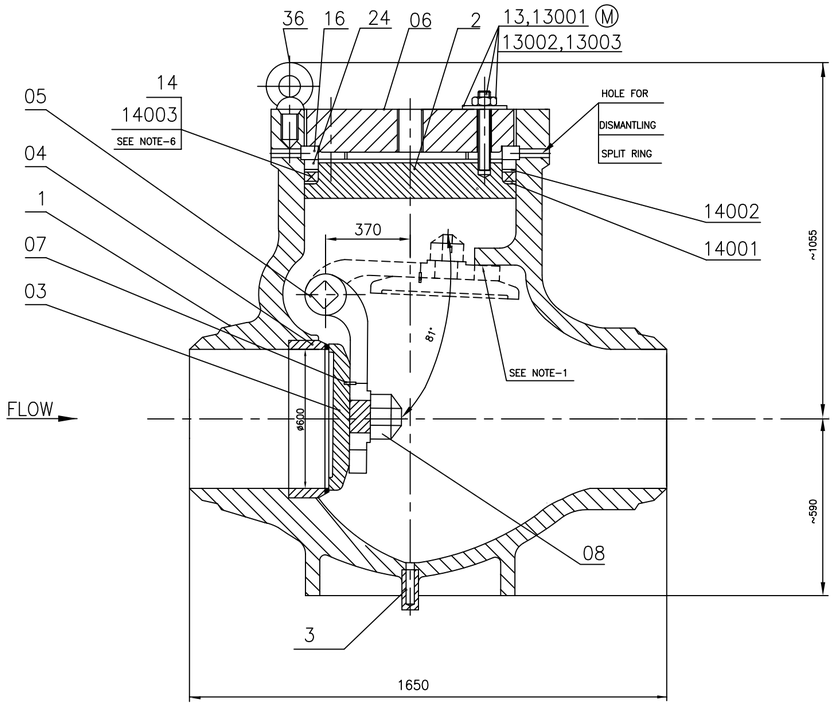


SECTION – DD

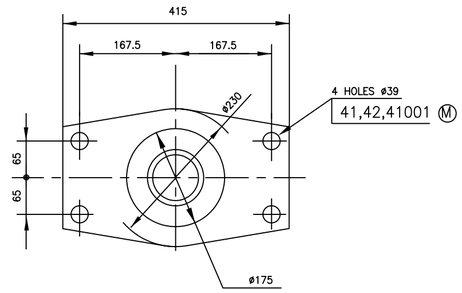


SECTION – BB

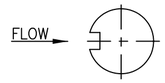


POSITION OF KEY WAY

WHEN DISC FULL CLOSE

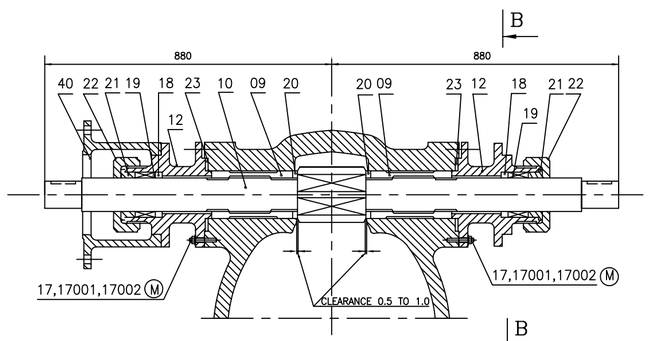


SECTION – AA

## NOTE:

1) GRIND THIS FACE TO ADJUST FOR TOUCHING CONDITIONS OF DISC WHEN THE VALVE IS FULLY OPENED.
2) HYDRAULIC TESTING OF VALVE SHALL BE DONE AS PER APPLICABLE LATEST QUALITY PROCEDURE
3) ASSEMBLY AND INSPECTION SHALL BE AS PER THE APPLICABLE LATEST QUALITY PROCEDURE
4) FOR EDGE PREPARATION AND ORIENTATION OF ACTUATOR REFER CONTRACT INFORMATION SHEET
   WHILE VIEWING THE VALVE FROM THE FLOW DIRECTION, ADAPTER MOUNTING SHOULD BE ON RHS FOR RHS ACTUATOR ORIENTATION AND SHOULD BE ON LHS FOR LHS ACTUATOR ORIENTATION.
5) SCREWED SECTION OF PART WITH (M) SHALL BE APPLIED WITH ANTI-SEIZURE AGENT
6) REPLACE ITEM No.14003 WITH PREFORMED, GRAPHITE (ITEM 14) PACKING AT SITE AFTER STEAM BLOWING OPERATION.
7) * REFERENCE FOR THE BILL OF MATRIAL FOR THE ITEMS SHOWN IS GIVEN IN THE TABULAR COLUMN.

| NO OFF | DESCRIPTION | MATL CODE | MATL SPECN | HEAT TREATMENT | SCRAP SORT | NET WT (kg) | GROSS WT (kg) | DRAWING No | ITEM No |
|---|---|---|---|---|---|---|---|---|---|

| REV | DATE | ALTERED |
|---|---|---|
| | | CHD & APPD |
| ZONE | | |

CAUTION: The information on this document is the property of BHARAT HEAVY ELECTRICALS LTD. It must not be used directly or indirectly in any way detrimental to the interest of the company.

TYPE OF PRODUCT
OR NAME OF
CUSTOMER/PROJECT

BHARAT HEAVY ELECTRICALS LTD.,
UNIT: HIGH PRESSURE BOILER PLANT.
TIRUCHIRAPALLI-620014.
365-120

| | NAME | SIGN | DATE |
|---|---|---|---|
| DRN | V.ARUMUGAM | V.A | 31.03.06 |
| CHD | P.RAMANIKARAN | PRK | 31.03.06 |
| APPD | S. NATARAJAN | SNR | 31.03.06 |

NO. OF VAR.

DEPT V L
CODE 320
SCALE N.T.S
WEIGHT (KG). 4645
REFERENCE INFORMATIONS
NO. OF ITEMS

TITLE
CRHNRV ASSEMBLY
24" / 600CLASS

CARD CODE U 01

DRAWING NO. 2-V-0000-17517

REV 00

Size A2

DRAWING NO. 2-V-0000-17518

ALL DIMENSIONS ARE IN MILLIMETRES. FOR TOLERANCES OF UNTOLERANCED DIMENSIONS DURING MANUFACTURE REFER RELEVANT QCP / QP

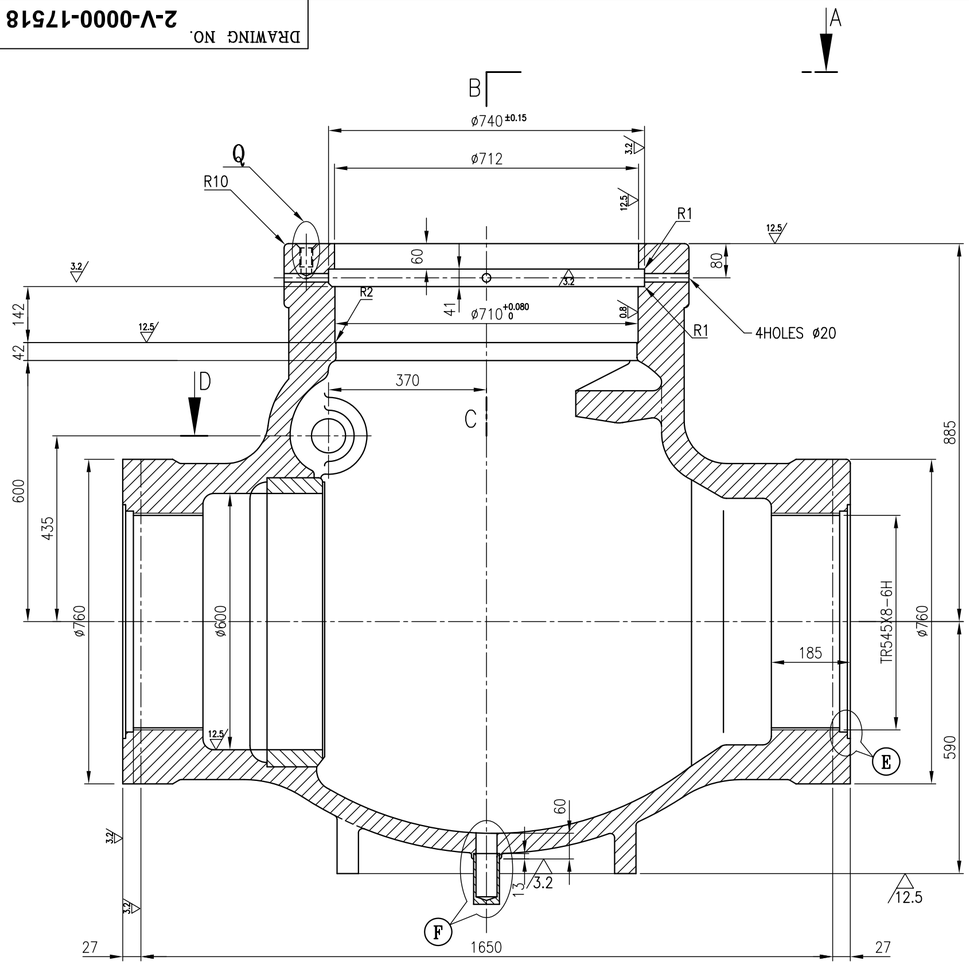


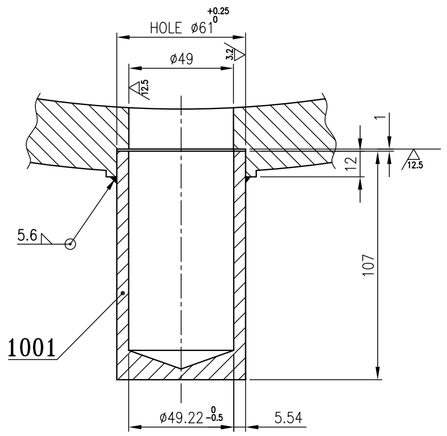


DETAIL-F

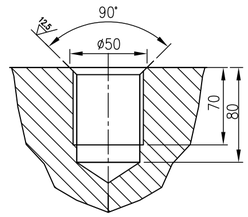


DETAIL-Q

| DIMENSION | TOLERANCE VALUE |
|---|---|
| ø120H7 | +0.035<br>0 |

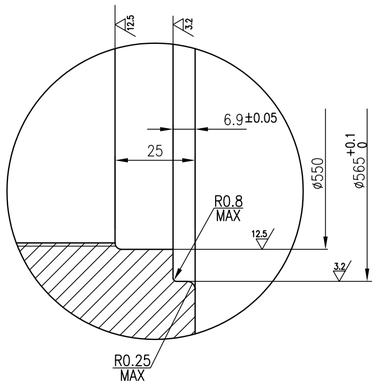


DETAIL - E

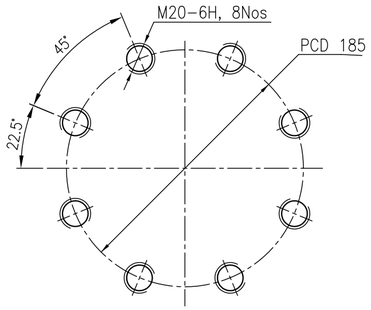


VIEW-P

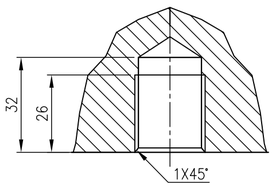


DETAIL-R

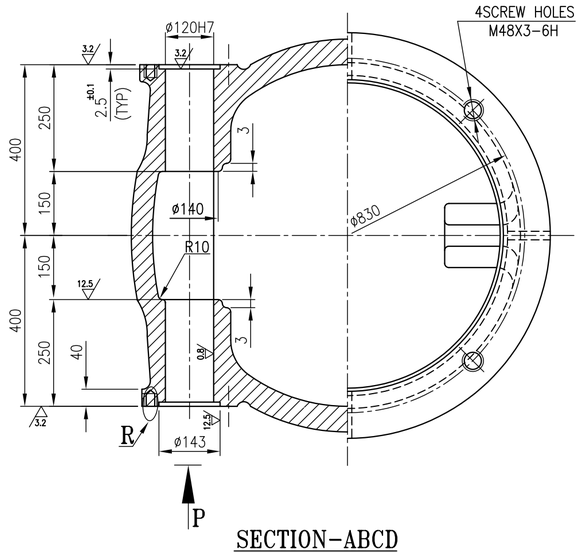


SECTION-ABCD

## NOTES:

01. ALL DIMENSIONS ARE IN mm. UNLESS OTHERWISE SPECIFIED.
02. APPLICABLE LATEST QUALITY PROCEDURE SHELL BE FOLLOWED IN ALL RESPECTS.

| SL.NO. | DRAWING NO. / COMP. CODE | CASTING DRAWING NO. / COMPONANT CODE | MATERIAL / SPECIFICATION | SCRAP / SORT |
|---|---|---|---|---|
| 02 | 2-V-L754-17518/00<br>93 122 327 0000 | 2VL75417519R/00<br>921527770000 | A217-WC9<br>ATT-NT | 20 |
| 01 | 2-V-L753-17518/00<br>93 122 326 0000 | 2VL75317519R/00<br>921527760000 | A217-WC6<br>ATT-NT | 20 |

| REV | DATE | ALTERED |
|---|---|---|
| | | CHD & APPD |
| ZONE | | |

CAUTION: The information on this document is the property of BHARAT HEAVY ELECTRICALS LTD. It must not be used directly or indirectly in any way detrimental to the interest of the company.

TYPE OF PRODUCT
OR NAME OF
CUSTOMER/PROJECT

BHARAT HEAVY ELECTRICALS LTD.,
UNIT: HIGH PRESSURE BOILER PLANT.
TIRUCHIRAPALLI-620014.
365-120

| | NAME | SIGN | DATE | NO.OF VAR. |
|---|---|---|---|---|
| DRN | V.ARUMUGAM | V.A | 28.03.07 | |
| CHD | P.RAMANIKARAN | P.R.K | 29.03.07 | |
| APPD | S.NATARAJAN | S.N | 29.03.07 | |

| DEPT | SCALE | WEIGHT (KG). | REFERENCE INFORMATIONS | NO. OF ITEMS |
|---|---|---|---|---|
| VL | N.T.S | 3508 | | |
| CODE | | | | |

| TITLE | CARD CODE | DRAWING NO. | REV |
|---|---|---|---|
| **BODY ASSEMBLY (24"/600 CLASS)** | U 01 | **2-V-0000-17518** | **00** |

Size A2

ALL DIMENSIONS ARE IN MILLIMETRES.

FOR TOLERANCES OF UNTOLERANCED DIMENSIONS DURING MANUFACTURE REFER RELEVANT QCP/QP

| REV | DATE | ALTERED |
|---|---|---|
| | | CHD & APPD |

CAUTION: The information on this document is the property of BHARAT HEAVY ELECTRICALS LTD. It must not be used directly or indirectly in any way detrimental to the interest of the company.

12.5 / 3.2

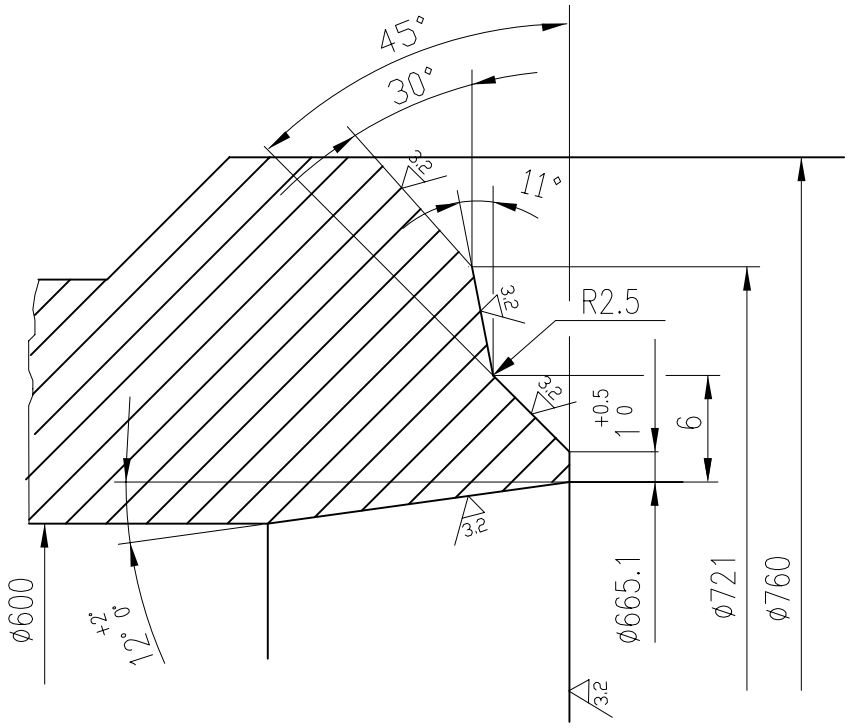


NOTE:

FOR QUALITY REQUIREMENTS REFER APPLICABLE QUALITY PROCEDURE.

| NO OFF | DESCRIPTION | MATL CODE | MATL SPECN | HEAT TREATMENT | SCRAP SORT | NET WT (kg) | GROSS WT (kg) | DRAWING No | ITEM No |
|---|---|---|---|---|---|---|---|---|---|
| | | | | | | | | | |

BHARAT HEAVY ELECTRICALS LTD.,
UNIT: HIGH PRESSURE BOILER PLANT.
TIRUCHIRAPALLI 620014.
365-122

| | NAME | SIGN | DATE | NO.OF VAR |
|---|---|---|---|---|
| DRN | S. MURUGA VALLI | S.M.V | 21.01.06 | |
| CHD | P.RAMANIKARAN | P.R.K | 21.01.06 | |
| APPD | S.NAGARAJAN | S.N | 21.01.06 | |

| DEPT | SCALE | WEIGHT (KG). | REFERENCE INFORMATIONS | NO. OF ITEMS |
|---|---|---|---|---|
| VL | NTS | | | |
| CODE 320 | | | | |

| TITLE | CARD CODE | DRAWING NO. | REV |
|---|---|---|---|
| EDGE PREPARATION<br>CRH NRV 24" 600CL. | U 01 | 4-V-L753-20368 | 00 |

Size A4

ALL DIMENSIONS ARE IN MILLIMETRES. FOR TOLERANCES OF UNTOLERANCED DIMENSIONS DURING MANUFACTURE REFER RELEVANT QCP / QP.

DRAWING NO. 3-V-0000-23440/01

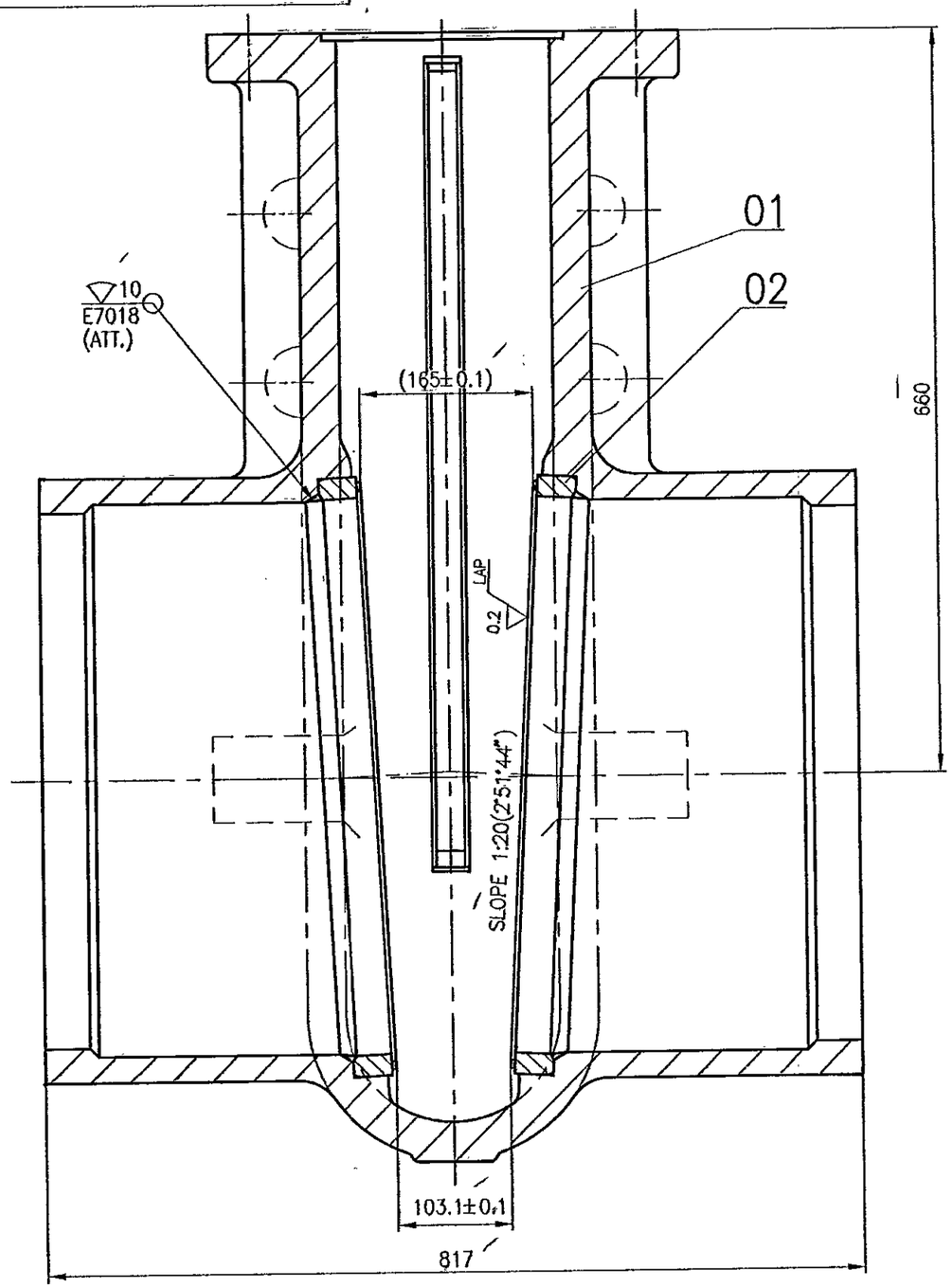


| REV | DATE | ALTERED |
|---|---|---|
| 01 | 9.8.2000 | CHD & APPD M.R.K. |

SL. No. 02 INCLUDED.

CAUTION: The information on this document is the property of BHARAT HEAVY ELECTRICALS LTD. It must not be used directly or indirectly in any way detrimental to the interest of the company.

| SL.No. | DRAWING NO. | MATL SPECN | COMP. CODE | NET WT (kg) | GROSS WT (kg) | BODY CASTING DRAWING No |
|---|---|---|---|---|---|---|
| 02 | 3-V-N920-23440 | | 93110 0310000 | | | |
| 01 | 3-V-N805-23440 | | 931093170000 | | | 1-V-N805-05158R/01 |

TYPE OF PRODUCT
OR NAME OF
CUSTOMER/PROJECT

365-121

BHARAT HEAVY ELECTRICALS LTD.,
UNIT: HIGH PRESSURE BOILER PLANT.
TIRUCHIRAPALLI-620014.

| | NAME | SIGN | DATE |
|---|---|---|---|
| DRN | V. BAIRAVAN | | 30.3.99 |
| CHD | R.L. NARAYANAN | | 31/3/99 |
| APPD | M.RAJAKUMAR | | 2/4/99 |

NO. OF VAR.

| DEPT | SCALE | WEIGHT (KG). | REFERENCE INFORMATIONS | NO. OF ITEMS |
|---|---|---|---|---|
| VL | NTS | 524.0 | | |
| CODE 320 | | | | |

TITLE: BODY ASSEMBLY
24"/150CL GV

CARD CODE: U 01

DRAWING NO. 3-V-0000-23440

REV 01

Size A3

ALL DIMENSIONS ARE IN MILLIMETRES. FOR TOLERANCES OF UNTOLERANCED DIMENSIONS DURING MANUFACTURE REFER RELEVANT QCP / QP.

DRAWING NO. 3-V-0000-17206/17

12.5 / 3.2 / 1.6

| SL. NO. | DRAWING NO. | COMPONENT CODE | MATL. SPECN. | DIMENSIONS ØD | ØD1 | ØD2 | ØD3 | ØD4 | ØD5 | ØD6 | L1 | SEAT RING WT.(KG) | SEAT WT.(KG) | SEAT RING ASSY. WT.(KG) | * SEAT FINAL LAYER / * SEAT BUFFER LAYER | SEAT VOL. IN (C.C) | SIZE/RATING |
|---|---|---|---|---|---|---|---|---|---|---|---|---|---|---|---|---|---|
| 01 | 3-V-N224-17206/05 | 931050500000 | SA515 Gr.70, CERTIFY,NR | 525 | 517 | 501 | 507 | 493 | 519 | 499 | 36.5 | 6.8 | 0.260 | 7.06 | E410 / E430 | 23.98 / 9.59 | 20"/150CL GV |
| 02 | 3-V-N316-17206/05 | 931066820000 | | 379.5 | 361 | 349 | 348 | 340 | 363 | 347 | 30.5 | 4.8 | 0.15 | 4.95 | E410 / E430 | 14.3 / 7.0 | 14"/150CL GV |
| 03 | 3-V-N350-17206/05 | 931066830000 | | 421.5 | 414 | 400 | 400 | 391 | 416 | 398 | 30.5 | 4.2 | 0.2 | 4.4 | E410 / E430 | 19.7 / 9.6 | 16"/150CL GV |
| 04 | 3-V-N361-17206/06 | 931066840000 | | 629 | 620 | 602 | 607 | 593 | 622 | 599 | 36.5 | 8.95 | 0.35 | 9.3 | E410 / E430 | 39.2 / 19.4 | 24"/150CL GV |
| 05 | 3-V-N435-17206/05 | 931071380000 | | 362 | 353 | 339 | 354 | 336 | 355 | 337 | 30.5 | 3.4 | 0.18 | 3.58 | E410 / E430 | 20.4 / 9.2 | 14"/300CL GV |
| 06 | 3-V-N436-17206/06 | 931071400000 | | 416 | 407 | 389 | 404 | 386 | 409 | 387 | 40.5 | 5.9 | 0.26 | 6.16 | E410 / E430 | 28.4 / 13.6 | 16"/300CL GV |
| 07 | 3-V-N437-17206/06 | 931071420000 | | 515 | 506 | 485 | 500 | 480 | 508 | 483 | 40.5 | 8.6 | 0.37 | 8.97 | E410 / E430 | 44.7 / 19.8 | 20"/300CL GV |
| 08 | 3-V-N575-17206/05 | 931074030000 | | 472 | 464 | 450 | 460 | 442 | 466 | 448 | 34.5 | 5.6 | 0.2 | 5.8 | E410 / E430 | 22.8 / 10.1 | 18"/150CL GV |
| ~~09~~ | ~~3-V-N953-17206/01~~ | ~~931098010000~~ | | ~~379.5~~ | ~~361~~ | ~~349~~ | ~~348~~ | ~~340~~ | ~~363~~ | ~~347~~ | ~~30.5~~ | ~~4.8~~ | ~~0.15~~ | ~~4.95~~ | ~~* E410~~ / ~~E430~~ | ~~14.3~~ / ~~7.0~~ | ~~14"/150CL GV~~ |

| | |
|---|---|
| 500 TO 630-h7 | 0 / -0.070 |
| 400 TO 500-h7 | 0 / -0.063 |
| 315 TO 400-h7 | 0 / -0.057 |

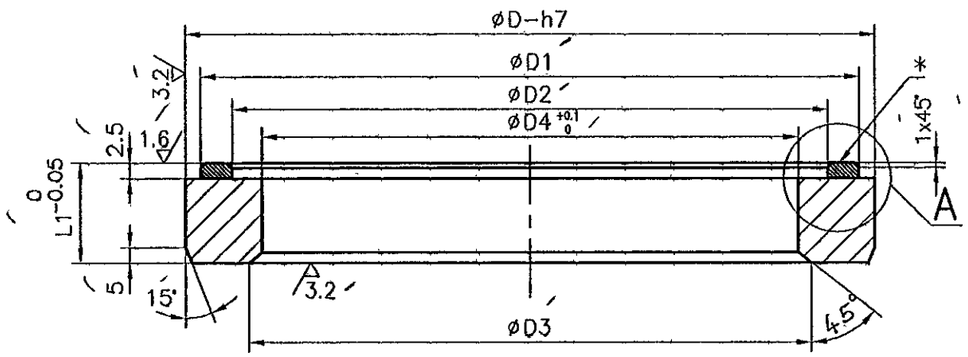


DETAIL A

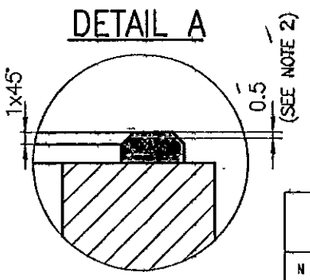


## NOTES:-

1. SEAT HARDNESS FOR E410: 350 - 400 BHN
2. 0.5mm EXTRA THICKNESS PROVIDED FOR FINE FACING AFTER SEAT RING WELDED WITH BODY.
3. ~~* SEAT HARDNESS FOR E410: 250 - 300 BHN FOR SL. No. 09 ONLY.~~

MACHINING AFTER BUFFER LAYER

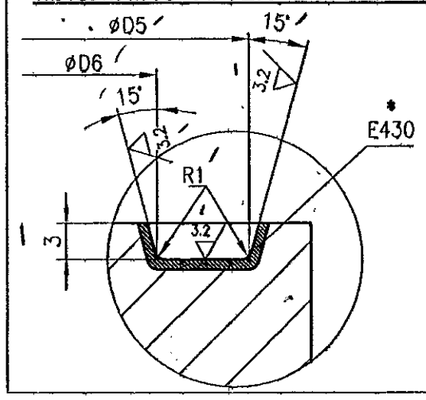


| REV. | DATE | |
|---|---|---|
| 17 | 18.1.2000 | ALT. R.L. / CHE.& APPD. M.R.K. |
| HARDNESS 350 BHN CHANGED AS 350-400 BHN FOR SL.NoS. 01 TO 08. NEW DRG. MADE FOR SL. No. 09 DCN No. HM. 0431 | | |
| REV | DATE | ALTERED R.L. |
| 16 | 23.12.99 | CHD & APPD M.R.K. |

SL.No.09 INCLUDED

CAUTION: The information on this document is the property of BHARAT HEAVY ELECTRICALS LTD. It must not be used directly or indirectly in any way detrimental to the interest of the company.

| NO OFF | DESCRIPTION | MATL CODE | MATL SPECN | HEAT TREATMENT | SCRAP SORT | NET WT (kg) | GROSS WT (kg) | DRAWING No | ITEM No |
|---|---|---|---|---|---|---|---|---|---|
| | | | | | | | | | |

TYPE OF PRODUCT OR NAME OF CUSTOMER/PROJECT

RETRACED WITH REV.16 ON 23.12.99

BHARAT HEAVY ELECTRICALS LTD., UNIT: HIGH PRESSURE BOILER PLANT. TIRUCHIRAPALLI-620014.

365-121

| | NAME | SIGN | DATE | NO.OF VAR. |
|---|---|---|---|---|
| DRN | V.BAIRAVAN | | 23.12.99 | |
| CHD | R.L.NARAYANAN | | 23/12/99 | |
| APPD | M.RAJAKUMAR | | 23.12.99 | |

| DEPT | SCALE | WEIGHT (KG). | REFERENCE INFORMATIONS | NO. OF ITEMS |
|---|---|---|---|---|
| VL | N T S | | CAD REF: C317206 | |
| CODE 320 | | | | |

| TITLE | CARD CODE | DRAWING NO. | REV |
|---|---|---|---|
| SEAT RING ASSEMBLY | U 01 | 3-V-0000-17206 | 17 |

Size A3

TP-DG-1-V-N805-05160
CORPORATE DRG ID

DRAWING NO. 1-V-N805-05160/03

ALL DIMENSIONS ARE IN MILLIMETRES. FOR TOLERANCES OF UNTOLERANCED DIMENSIONS DURING MANUFACTURE REFER RELEVANT QCP/QP

| | |
|---|---|
| ø210-H11 | +0.290 / 0 |
| ø629-H7 | +0.070 / 0 |

## SECTION AA

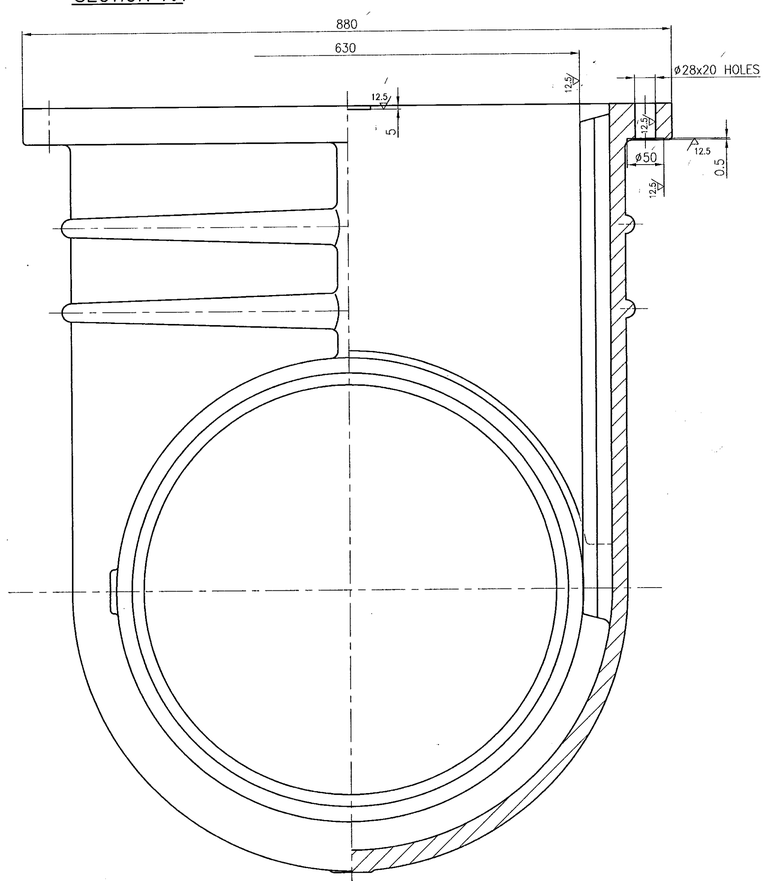


## SECTION BB

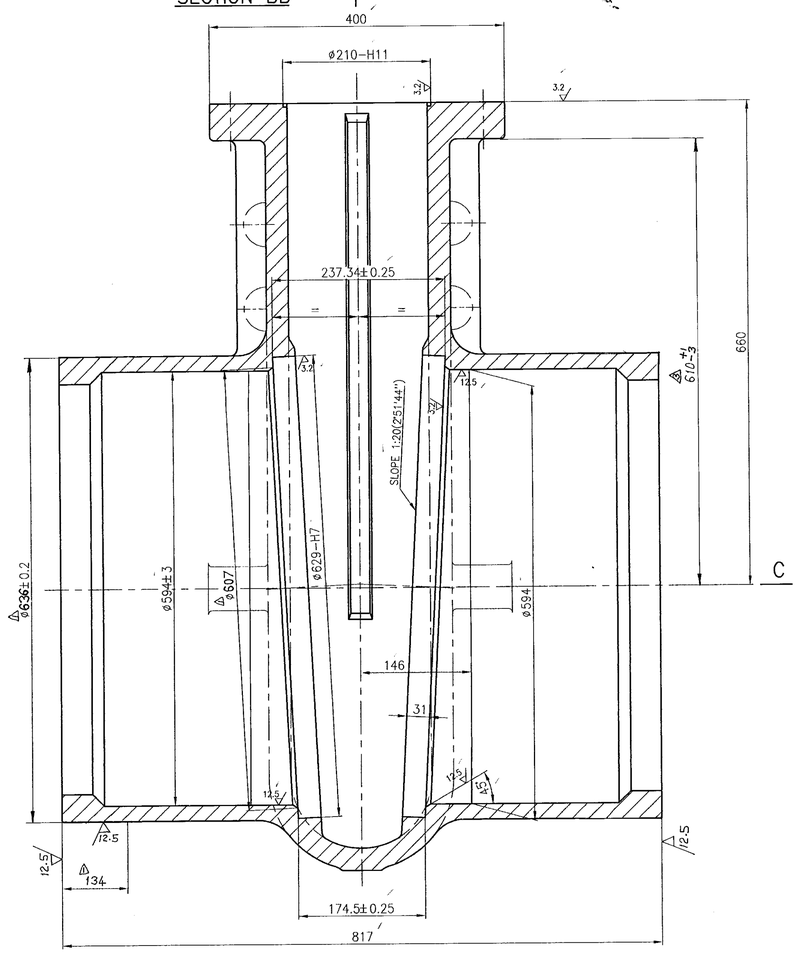


## SECTION CC

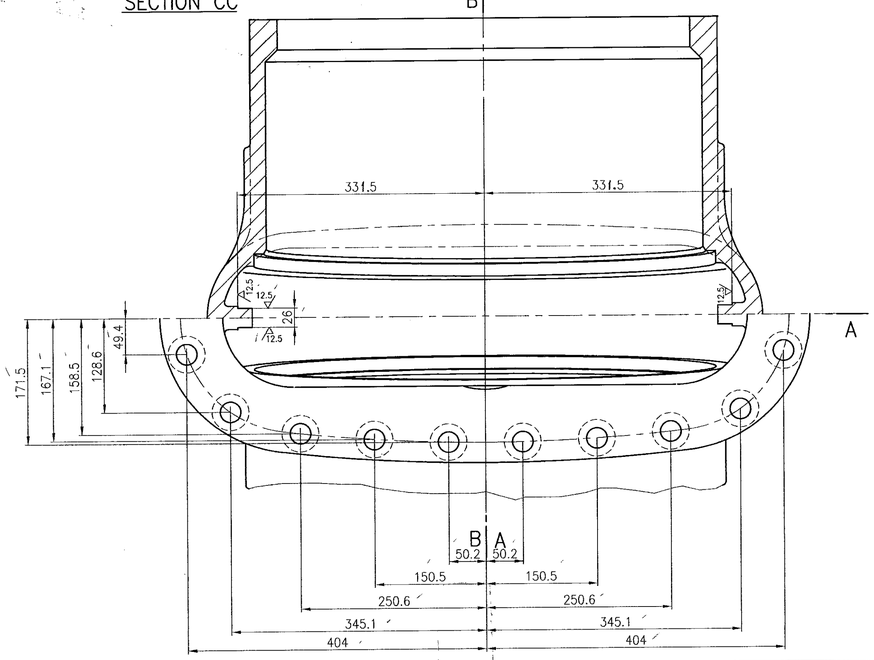


COMP. CODE:9310978500000

| No OFF | DESCRIPTION | MATL CODE | MATL SPECN | HEAT TREATMENT | SCRAP SORT | NET WT (kg) | GROSS WT (kg) | DRAWING No | ITEM No |
|---|---|---|---|---|---|---|---|---|---|
| | | 92201051 | A216 WCB, ATTEST | NR | 10 | 505.2 | 550 | | |

TYPE OF PRODUCT
OR NAME OF
CUSTOMER/PROJECT

BHARAT HEAVY ELECTRICALS LTD.,
UNIT: HIGH PRESSURE BOILER PLANT.
TIRUCHIRAPALLI-620014.
365-119

| | NAME | SIGN | DATE |
|---|---|---|---|
| DRN | V.BAIRAVAN | | 30.3.99. |
| CHD | R.L.NARAYANAN | | 31/3/99 |
| APPD | M.RAJAKUMAR | | 2/4/99 |

DEPT VL
CODE 320
SCALE N T S
WEIGHT (KG).
REFERENCE INFORMATIONS
CAD REF. NO:C105160

TITLE BODY 24"/150 CL
CARD CODE U 01
DRAWING NO. 1-V-N805-05160
REV 03

Size A1

CAUTION: The information on this document is the property of BHARAT HEAVY ELECTRICALS LTD., it must not be used directly or indirectly in any way detrimental to the interest of the company.

| REV | DATE | ALT. | REV | DATE | ALT. | REV | DATE | ALTERED |
|---|---|---|---|---|---|---|---|---|
| 03 | 17.6.2000 | CHR. & APPD. M.R.K. | 02 | 19.11.99 | CHE & APPD. M.R.K. | 01 | 11.9.99 | CHD & APPD M.R.K |
| DIM. 610 +1 -3 WAS 610-8.5 DCN No. HM 0447 | | | COMP. CODE CHANGED. DCN No. HM 0418 | | | DIM. ø607 & ø636±0.2 WAS ø600 & ø626±0.2 RESP. DIM. 134 WAS 125. DIM. 45° DELETED. DCN No. HM 0406 | | |

TP-DG-1-V-N805-05160
CORPORATE DRG ID