FIRST ANGLE PROJECTION

(ALL DIMENSIONS ARE IN MM)

DRG.NO. 35027500425

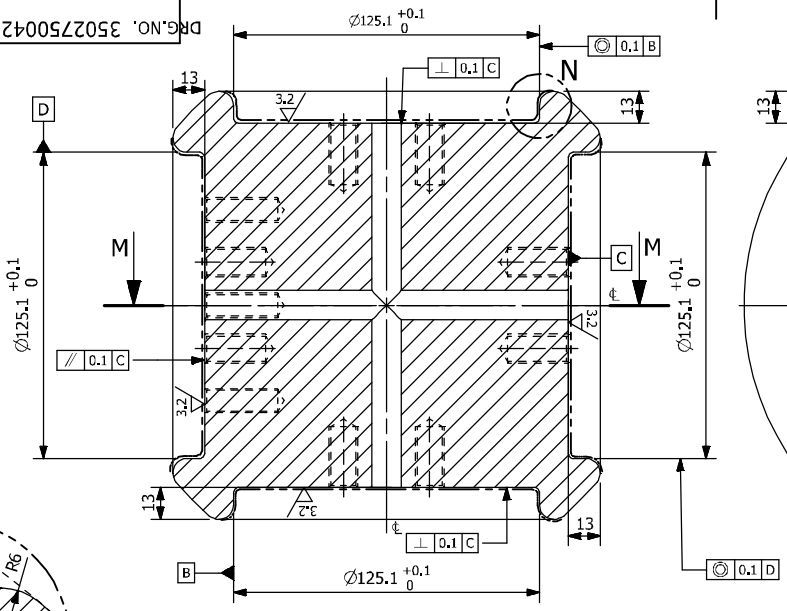

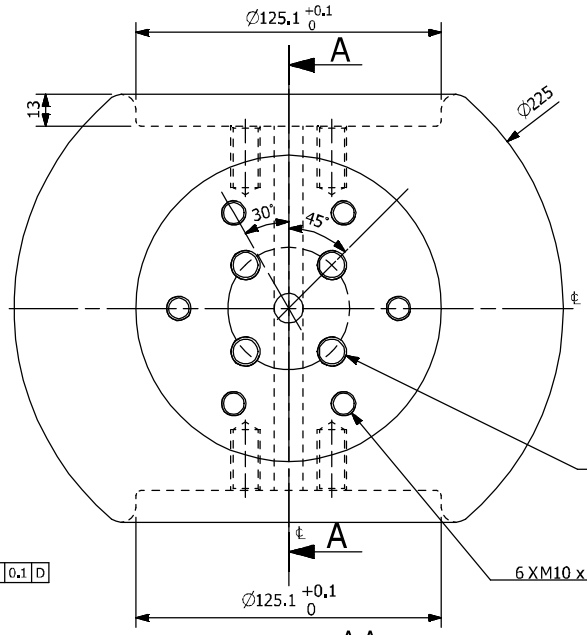

SECTION A-A

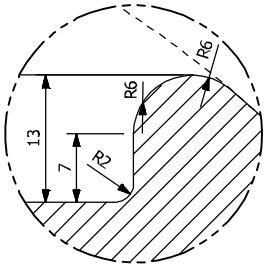

DETAIL N
SCALE 2:1

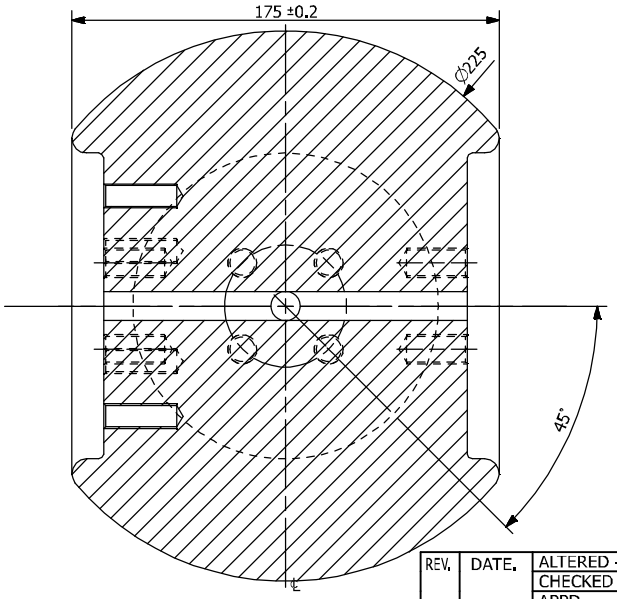

SECTION M-M

NOTE:
1. COMPONENT SHALL BE CNC MACHINED.
2. ELECTRICAL GRADE ALUMINIUM SHALL BE USED.
3. HELICOIL TAPS SHALL BE MADE.
4. ALL CONNECTION FACES SHALL BE SILVER PLATED . TO 6-7 MICRON AS MARKED BY

3.2 (0.8)

ITEM NO.	DESCRIPTION	STD.	DRAWING NO.	IT. NO. VAR	MATL. CODE / MATL. SPECN.	A/C	UNIT	UNIT WT. / QTY.	G.S.	ZONE
001	230 x 180 x 180 HE-30				AA12330		KG	20.12 001		

mRikn dk izdkj ;k
xzkgd@ifj;kstuk dk uke
TYPE OF PRODUCT OR
NAME OF CUSTOMER/PROJECT

GIS-420

Hkkjr gsoh bysfDV`dYl fyfeVsM
Hkksiky
BHARAT HEAVY ELECTRICALS LTD.
BHOPAL

	uke/NAME	gLrk-/SIGN.	ruakd/DATE	osfj- dh la[;k NO.OF VAR
cuk;k DRN.	AKN		23.05.16	
tkWpk CKD.	SONALI		23.05.16	
Lohd`r APPD.	SKP		23.05.16	-

REV.	DATE.	
		ALTERED -
		CHECKED -
		APPD -
ZONE		

foHkkx DEPT.SWE	vu-Vky-uki dh Js.kh UNTOL.DMS. GR.		vuqikr SCALE	Hkkj (fd-xzk-) WEIGHT(K.G.)
dksM CODE 409	M AA0230208		1 : 1	12.04

vls-MkbZax dk lanHkZ REF.TO ASSY.DRG.

en dz- ITEM NO.

en-dh la[;k NO.OF ITEMS 001

'kh"kZd/TITLE

SPHERICAL BALL SMALL

vkjs[k dz-/DRAWING NO. 35027500425

qu-/REV. 00

i`"B dz-/SHT NO.1 i`"Bksa dh la[;k/NO.OF SHT.1

A3

THE INFORMATION ON THIS DOCUMENT IS THE PROPERTY OF BHARAT HEAVY ELECTRICALS LIMITED
IT MUST NOT BE USED DIRECTLY OR INDIRECTLY IN ANY WAY DETERMENTAL TO THE INTEREST OF THE COMPANY

REF.DRG.NO. RDDG43506170525

SIGN AND DATE

INVENTORY NO.