An ISO 9001 Company

Bharat Heavy Electricals Limited

(High Pressure Boiler Plant**)**
Tiruchirappalli – 620014, TAMIL NADU, INDIA
MATERIALS MANAGEMENT

TITLE **GALVANIZED ELECTRO FORGED FLOOR GRILS.**	Phone: +91 431 257 7457/2577074 Fax : +91 431 252 0719 Email : rksamy@bheltry.co.in

	Reference Number: Enquiry 1801100775	**Enquiry Date: 09.07.2011**	**Due date for submission of quotation: 09.08.2011**
You are requested to quote the Enquiry number date and due date in all your correspondences. This is only a request for quotation and not an order			

BHEL/Trichy is looking for empanelment of new vendors for supply of "Galvanised Electro Forged Floor Grills.**"**

BHEL commercial terms & conditions with Price Bid formats and all annexure can be downloaded from BHEL web site http://www.bhel.com or from the Government tender website http://tenders.gov.in (public sector units) Bharath Heavy Electricals Limited) under enquiry reference "XXXXXXXXXX "	
Tenders should reach us before 14:00 hours on the due date Technical bid will be opened at 14:30 hours on the due date Tenders would be opened in presence of the tenderers who have submitted their offers and who may like to be present.	Yours faithfully, For **Bharath Heavy Electricals Limited** **DGM / MM**

BHEL TRICHY
MM / FB/SD

REF: FB: PUR: 33EFG/OT **DATED**: 08.07.2011

SPECIAL CONDITIONS

1. This tender is for the supply of Electro Forged Floor Grills of sizes 32x995x6000, 32x515x6000 and 32x305x6000 as per BHEL drawing no 1-35-811-02525/07 attached with this tender. The floor grills will be galvanized.

2. The vendor shall have adequate experience in manufacturing and supply of Electro forged Floor Grills.

3. Vendor shall indicate in their offer clearly the monthly tonnage that can be manufactured in their factory against the requirement and also their total manufacturing capacity in MT / Month. Vendors also have to send an Integrity pact as per format given by BHEL.

4. The tender is in two parts. One part consisting of commercial and technical conditions and other with price details. Techno-Commercial bid and price bid are to be submitted in separate sealed covers. In addition to technical and commercial conditions, vendors who are not registered vendor of BHEL, Trichy have to submit the filled in "Supplier Registration Forms" (available in www.bhel.com) along with the technical bid. Based on this and other conditions, as well as capacity and capability, vendors will be short-listed. Both these covers are to be put in a single cover duly super scribing the Enquiry Number. The technical and commercial bid will be opened on the due date and based on the acceptance of techno-commercial bid and vendor evaluation, the price bid of the qualified vendors will be opened on a suitable date with due intimation.

   Following will be the criteria for vendors to qualify:
   a. Vendor should have been approved by BHEL Trichy for this items under Permanent category OR
   b. Vendor should submit the following documents for considering them as an approved vendor:
      i. Duly filled-in Supplier Registration Forms.
      ii. Availability of minimum manufacturing, handling, testing and measuring facilities as detailed in the Supplier Registration Form.
      iii. BHEL will have the right for spot assessment of the facilities for assessment.
      iv. Qualifying to our techno commercial requirements of the Enquiry.

5. BHEL reserves the right to increase or decrease the tendered quantity and split the tendered quantity among more than one tenderer and place orders accordingly in any proportion based on commitment, requirement and supplier's capability in terms of delivery and quality as assessed by BHEL.

6. BHEL reserves the right to negotiate the L1 rate.

7. BHEL reserves the right to re-float the tender opened, if L1 price is not the lowest acceptable price to them inter-alia other reasons.

8. BHEL reserves the right to order on more than one vendor at the lowest acceptable price to BHEL.

9. BHEL standard LD condition is 0.50 % per week to a maximum of 15 % for the undelivered portion of materials.

10. a) BHEL general Payment terms are 90 % through Bank (Within 45 to 90 days) and balance 10 % after the receipt materials at site.
    OR
    b) 100 % payment will be made in 60 days from the date of receipt of materials at site.

(Sachin Saini)
ET/MM/SD – Fossil Boilers

Specification

Supply of Electro Forged Floor Grills made of steel of sizes 32x995x6000, 32x515x6000 and 32x305x6000 as per BHEL drawing no 1-35-811-02525/07 attached with this tender.

Specification of structural steel must be as per BHEL drawing.

The material shall be galvanized by Hot Dip Process with average weight of Zinc coating be 610 gms per sqm.

Total Requirement

Sl. No	Description	Qty	Remarks
1	Electro Forged Floor Grills 32x995x6000	13403	
2	Electro Forged Floor Grills 32x515x6000	3710	
3	Electro Forged Floor Grills 32x305x6000	4954	

The project wise quantity will be intimated before opening of the price bid.

(Sachin Saini)
ET/MM/SD – Fossil Boilers

DRAWING NO. 1-35-811-02525

FOR TOLERANCES OF UNTOLERANCED DIMENSIONS DURING MANUFACTURE REFER PLANT STD. NO TP 023 0299

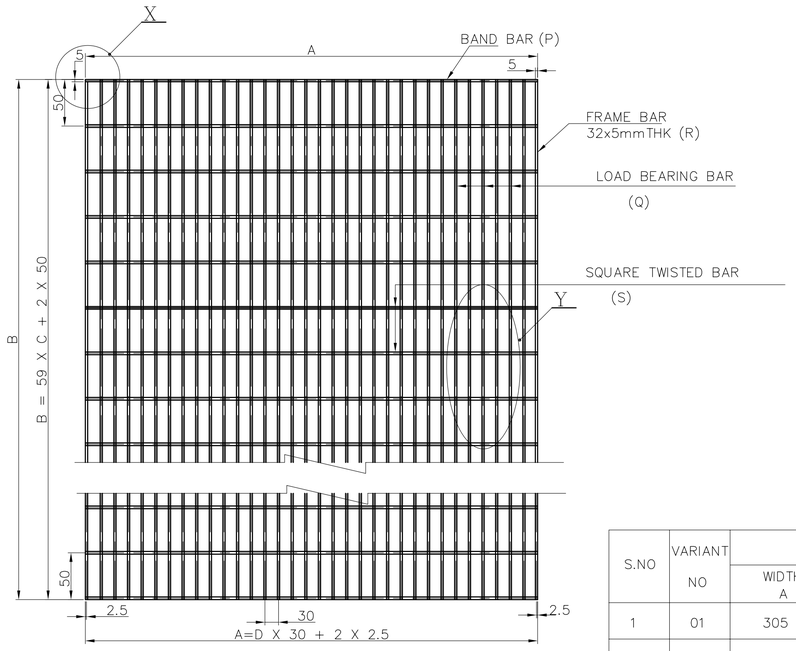

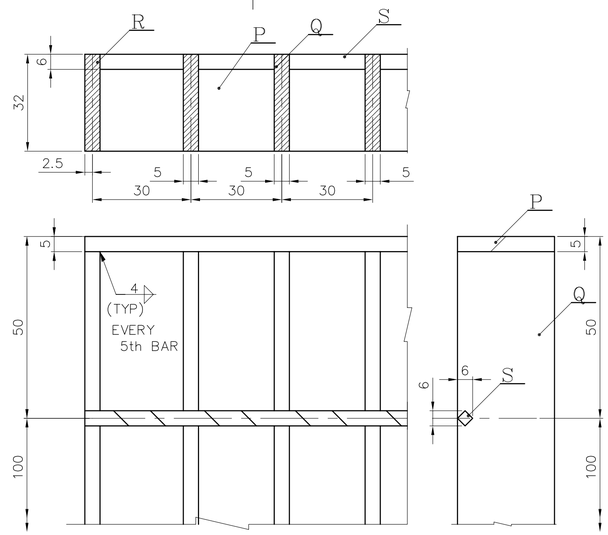

DETAIL-X

TYPE & SIZE OF WELD	TYPE OF ELECTRODE
4 ◺	E7018

S.NO	VARIANT NO	SIZE OF FLOOR GRILL				ITEM NO/NO.OFF								WT. PER FLOOR GRILL BEFORE GALVANISING IN KG	WT. PER FLOOR GRILL AFTER GALVANISING IN KG
		WIDTH A	LENGTH B	C	D	P		Q		R		S			
1	01	305	6000	100	10	01	2	02	9	03	2	04	60	86.099	89.288
2	02	515	6000	100	17	05	2	06	16	07	2	08	60	141.088	146.319
3	03	995	6000	100	33	09	2	10	32	11	2	12	60	266.742	276.639

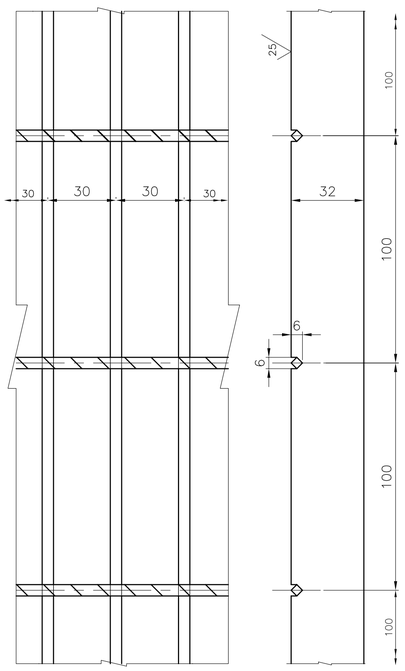

DETAIL-Y

NOTES: –

1. FLOOR GRATINGS ARE TO BE GALVANISED BY HOT DIP PROCESS AFTER CLEANING BY PICKLING PROCESS. MINIMUM AVERAGE WEIGHT OF ZINC COATING SHALL BE 610 GRAMS PER SQ. METER.
2. STRUCTURAL STEEL CONFORMING TO SPECIFICATION IS 2062 Fe410A ONLY ARE TO BE USED
3. GALVANISING TO BE DONE AFTER ALL WORKS ARE COMPLETED.
4. ALL SCRATCHED SURFACES AND AREAS DAMAGED BY SITE WELDING SHALL RECEIVE ATLEAST TWO COATS OF COLD GALVANISING USING ZINC RICH PRIMER /PAINTS. THE TOTAL DRY FILM THICKNESS OF SUCH TOUCH UP COLD GALVANISING SHALL NOT BE LESS THAN 150 MICRONS.
5. DESIGN LIVE LOAD FOR FLOOR GRILL = 1000 KG/SQ.M IN OPERATING FLOORS AND 500 KG/SQ.M IN NON- OPERATING FLOORS.
6. ALL GRATING MEMBERS ARE TO BE ELECTROFORGED EXCEPT BAND BARS.
7. WEIGHT OF FLOOR GRILL INDICATED DOES NOT INCLUDE WEIGHT OF WELD, WHICH IS NEGLIGIBLE.
8. FLOOR GRILLS ARE SUPPORTED BY INTERMITTENT FLOOR BEAMS SUCH THAT, FLOOR GRILLS TAKE LIVE LOAD AS PER NOTE NO.05 AND THEIR DEFLECTION IS WITHIN L /325.
   FOR OPERATING FLOORS , THE SPAN OF SUPPORTS WILL BE 1.2M MAXIMUM AND FOR NON-OPERATING FLOORS , THE SUPPORT SPAN WILL BE 1.5M MAXIMUM
9. FRAME AND LOAD BEARING BAR WELDING : ALL FOUR CORNERS TO BE FULL WELDED TO BAND BARS AND EVERY FIFTH LOAD BEARING BAR TO BE WELDED TO BAND BAR BY MANUAL WELDING FULL DEPTH, AT BOTH ENDS FROM ONE SIDE.
10. GRATINGS (32mm THICK) ARE FOR OUT DOOR APPLICATION
11. TOLERANCE FOR LENGTH AND WIDTH ±5 mm

VARIANT NUMBER	ITEM NUMBER	DESCRIPTION	STD	DRAWING NUMBER	ITEM NO / VAR NO	MATERIAL CODE / MATERIAL SPECN	A/C/P / DI	UNIT / QUANTITY	UNIT WEIGHT	GS ZONE
03	12	TWISTED SQ. BAR 6mm (DIAGONAL)X 995				IS1786			0.141 / 60	
03	11	PLATE 5 32 X 5990				15011029 / IS2062Fe410A			7.523 / 2	
03	10	PLATE 5 32 X 5990				15011029 / IS2062Fe410A			7.523 / 32	
03	09	PLATE 5 32 X 995				15011029 / IS2062Fe410A			1.250 / 2	
02	08	TWISTED SQ. BAR 6mm (DIAGONAL)X 515				IS1786			0.073 / 60	
02	07	PLATE 5 32 X 5990				15011029 / IS2062Fe410A			7.523 / 2	
02	06	PLATE 5 32 X 5990				15011029 / IS2062Fe410A			7.523 / 16	
02	05	PLATE 5 32 X 515				15011029 / IS2062Fe410A			0.647 / 2	
01	04	TWISTED SQ. BAR 6mm (DIAGONAL)X 305				IS1786			0.043 / 60	
01	03	PLATE 5 32 X 5990				15011029 / IS2062Fe410A			7.523 / 2	
01	02	PLATE 5 32 X 5990				15011029 / IS2062Fe410A			7.523 / 9	
01	01	PLATE 5 32 X 305				15011029 / IS2062Fe410A			0.383 / 2	

REV	DATE	ALTD.	CHD	APPD	
07	04-05-08	kesavan	PENCHAL	RJK	DRAWING UPDATED
06	03.01.08	kesavan	PENCHAL	RJK	NO.OF BARS INCREASED BASED ON MANUFACTURERS FEED BACK.
05	10-06-05	KARTHIK	PENCHAL	RJK	TOLERANCE FOR LENGTH AND WIDTH ADDED
04	20-05-05	KARTHIK	PENCHAL	RJK	TITLE BLOCK REMOVED
03	10.09.'03		SKR	RRS	DRG. REVISED AS AGREED BY NTPC AS PER CLAUSE 9.0 OF M.O.M OF 4th TCM BETN. BHEL & NTPC dated .10 th &11.09.'03
02	21.08.03		SKR	RRS	DRAWING UPDATED AS PER NTPC TRANSMITTAL FOR DOCUMENTS REF.No. CC: PEV: 2240: 108: TR: 02 Dt.05.08.03
01			SKR	RRS	DRAWING TITLE BLOCK UPDATED

CAUTION: THE DRAWING IS THE PROPERTY OF BHARAT HEAVY ELECTRICALS LTD., AND IS NOT TO BE REPRODUCED OR USED TO FURNISH ANY INFORMATION FOR MAKING OF DRAWINGS OR APPARATUS EXCEPT WHERE PROVIDED FOR AGREEMENT WITH SAID COMPANY.

BHARAT HEAVY ELECTRICALS LTD
UNIT:HIGH PRESSURE BOILER PLANT
TIRUCHIRAPPALLI-620 014

DEPT CODE		NAME	SIGN	DATE
ST122	DRN	S.MANIVANNAN		31/05/03
	DESN	S.K.RAMAN		
	CHD	S.K.RAMAN		
	APPD	R.RAMASAMY		

TITLE
FLOOR GRILL
(6 TWISTED SQUARE – GALVANISED)

BHEL DRG NO. 1-35-811-02525

SCALE

REV 07

INTEGRITY PACT

Between

Bharat Heavy Electricals Ltd. (BHEL), a company registered under the Companies Act 1956 and having its registered office at "BHEL House", Siri Fort, New Delhi – 110049 (India) hereinafter referred to as "The Principal", which expression unless repugnant to the context or meaning hereof shall include its successors or assigns of the ONE PART

and

_____, (description of the party along with address), hereinafter referred to as "The Bidder/ Contractor" which expression unless repugnant to the context or meaning hereof shall include its successors or assigns of the OTHER PART

Preamble

The Principal intends to award, under laid-down organizational procedures, contract/s for _____

_____

_____. The Principal values full compliance with all relevant laws of the land, rules and regulations, and the principles of economic use of resources, and of fairness and transparency in its relations with its Bidder(s)/ Contractor(s).

In order to achieve these goals, the Principal will appoint Independent External Monitor(s), who will monitor the tender process and the execution of the contract for compliance with the principles mentioned above.

Section 1 – Commitments of the Principal

1.1 The Principal commits itself to take all measures necessary to prevent corruption and to observe the following principles:-

1.1.1 No employee of the Principal, personally or through family members, will in connection with the tender for, or the execution of a contract, demand, take a promise for or accept, for self or third person, any material or immaterial benefit which the person is not legally entitled to.

1.1.2 The Principal will, during the tender process treat all Bidder(s) with equity and reason. The Principal will in particular, before and during the tender process, provide to all Bidder(s) the same information and will not provide to any Bidder(s) confidential / additional information through which the Bidder(s) could obtain an advantage in relation to the tender process or the contract execution.

1.1.3 The Principal will exclude from the process all known prejudiced persons.

1.2 If the Principal obtains information on the conduct of any of its employees which is a penal offence under the Indian Penal Code 1860 and Prevention of Corruption Act 1988 or any other statutory penal enactment, or if there be a substantive suspicion in this regard, the Principal will inform its Vigilance Office and in addition can initiate disciplinary actions.

Section 2 – Commitments of the Bidder(s)/ Contractor(s)

2.1 The Bidder(s)/ Contractor(s) commit himself to take all measures necessary to prevent corruption. He commits himself to observe the following principles during his participation in the tender process and during the contract execution.

2.1.1 The Bidder(s)/ Contractor(s) will not, directly or through any other person or firm, offer, promise or give to the Principal or to any of the Principal's employees involved

in the tender process or the execution of the contract or to any third person any material, immaterial or any other benefit which he / she is not legally entitled to, in order to obtain in exchange any advantage of any kind whatsoever during the tender process or during the execution of the contract.

2.1.2 The Bidder(s)/ Contractor(s) will not enter with other Bidder(s) into any illegal or undisclosed agreement or understanding, whether formal or informal. This applies in particular to prices, specifications, certifications, subsidiary contracts, submission or non-submission of bids or any other actions to restrict competitiveness or to introduce cartelization in the bidding process.

2.1.3 The Bidder(s)/ Contractor(s) will not commit any penal offence under the relevant IPC/ PC Act; further the Bidder(s)/ Contractor(s) will not use improperly, for purposes of competition or personal gain, or pass on to others, any information or document provided by the Principal as part of the business relationship, regarding plans, technical proposals and business details, including information contained or transmitted electronically.

2.1.4 The Bidder(s)/ Contractor(s) will, when presenting his bid, disclose any and all payments he has made, and is committed to or intends to make to agents, brokers or any other intermediaries in connection with the award of the contract.

2.2 The Bidder(s)/ Contractor(s) will not instigate third persons to commit offences outlined above or be an accessory to such offences.

Section 3 – Disqualification from tender process and exclusion from future contracts

If the Bidder(s)/ Contractor(s), before award or during execution has committed a transgression through a violation of Section 2 above, or acts in any other manner such as to put his reliability or credibility in question, the Principal is entitled to disqualify the Bidder(s)/ Contractor(s) from the tender process or take action as per the separate "Guidelines on Banning of Business dealings with Suppliers/ Contractors". framed by the Principal.

Section 4 – Compensation for Damages

4.1 If the Principal has disqualified the Bidder from the tender process prior to the award according to Section 3, the Principal is entitled to demand and recover the damages equivalent Earnest Money Deposit/Bid Security.

4.2 If the Principal has terminated the contract according to Section 3, or if the Principal is entitled to terminate the contract according to section 3, the Principal shall be entitled to demand and recover from the Contractor liquidated damages equivalent to 5% of the contract value or the amount equivalent to Security Deposit/Performance Bank Guarantee, whichever is higher.

Section 5 – Previous Transgression

5.1 The Bidder declares that no previous transgressions occurred in the last 3 years with any other company in any country conforming to the anti-corruption approach or with any other Public Sector Enterprise in India that could justify his exclusion from the tender process.

5.2 If the Bidder makes incorrect statement on this subject, he can be disqualified from the tender process or the contract, if already awarded, can be terminated for such reason.

Section 6 – Equal treatment of all Bidders/ Contractors/ Sub-contractors

6.1 The Bidder(s)/ Contractor(s) undertake(s) to obtain from all subcontractors a commitment consistent with this Integrity Pact and report Compliance to the Principal. This commitment shall be taken only from those sub-contractors whose contract value is more than 20 % of Bidder's/ Contractor's contract value with the Principal. The Bidder(s)/ Contractor(s) shall continue to remain responsible for any default by his Sub-contractor(s).

6.2 The Principal will enter into agreements with identical conditions as this one with all Bidders and Contractors.

6.3 The Principal will disqualify from the tender process all bidders who do not sign this pact or violate its provisions.

Section 7 – Criminal Charges against violating Bidders/ Contractors /Sub-contractors

If the Principal obtains knowledge of conduct of a Bidder, Contractor or Subcontractor, or of an employee or a representative or an associate of a Bidder, Contractor or Subcontractor which constitutes corruption, or if the Principal has substantive suspicion in this regard, the Principal will inform the Vigilance Office.

Section 8 –Independent External Monitor(s)

8.1 The Principal appoints competent and credible Independent External Monitor for this Pact. The task of the Monitor is to review independently and objectively, whether and to what extent the parties comply with the obligations under this agreement.

8.2 The Monitor is not subject to instructions by the representatives of the parties and performs his functions neutrally and independently. He reports to the CMD, BHEL.

8.3 The Bidder(s)/ Contractor(s) accepts that the Monitor has the right to access without restriction to all contract documentation of the Principal including that provided by the Bidder(s)/ Contractor(s). The Bidder(s)/ Contractor(s) will grant the monitor, upon his request and demonstration of a valid interest, unrestricted and unconditional access to his contract documentation. The same is applicable to Sub-contractor(s). The Monitor is under contractual obligation to treat the information and documents of the Bidder(s)/ Contractor(s) / Sub-contractor(s) with confidentiality.

8.4 The Principal will provide to the Monitor sufficient information about all meetings among the parties related to the contract provided such meetings could have an impact on the contractual relations between the Principal and the Contractor. The parties offer to the Monitor the option to participate in such meetings.

8.5 As soon as the Monitor notices, or believes to notice, a violation of this agreement, he will so inform the Management of the Principal and request the Management to discontinue or take corrective action, or heal the situation, or to take other relevant action. The Monitor can in this regard submit non-binding recommendations. Beyond this, the Monitor has no right to demand from the parties that they act in a specific manner, refrain from action or tolerate action.

8.6 The Monitor will submit a written report to the CMD, BHEL within 8 to 10 weeks from the date of reference or intimation to him by the Principal and, should the occasion arise, submit proposals for correcting problematic situations.

8.7 The CMD, BHEL shall decide the compensation to be paid to the Monitor and its terms and conditions.

8.8 If the Monitor has reported to the CMD, BHEL, a substantiated suspicion of an offence under relevant IPC / PC Act, and the CMD, BHEL has not, within reasonable time, taken visible action to proceed against such offence or reported it to the Vigilance Office, the

Monitor may also transmit this information directly to the Central Vigilance Commissioner, Government of India.

8.9 The number of Independent External Monitor(s) shall be decided by the CMD, BHEL.

8.10 The word 'Monitor' would include both singular and plural.

Section 9 – Pact Duration

9.1 This Pact begins and shall be binding on and from the submission of bid(s) by bidder(s). It expires for the Contractor 12 months after the last payment under the respective contract and for all other Bidders 6 months after the contract has been awarded.

9.2 If any claim is made / lodged during this time, the same shall be binding and continue to be valid despite the lapse of this pact as specified as above, unless it is discharged/ determined by the CMD, BHEL.

Section 10 – Other Provisions

10.1 This agreement is subject to Indian Laws and jurisdiction shall be registered office of the Principal, i.e. New Delhi.

10.2 Changes and supplements as well as termination notices need to be made in writing. Side agreements have not been made.

10.3 If the Contractor is a partnership or a consortium, this agreement must be signed by all partners or consortium members.

10.4 Should one or several provisions of this agreement turn out to be invalid, the remainder of this agreement remains valid. In this case, the parties will strive to come to an agreement to their original intentions.

10.5 Only those bidders/ contractors who have entered into this agreement with the Principal would be competent to participate in the bidding. In other words, entering into this agreement would be a preliminary qualification.

---	---
For & On behalf of the Principal	For & On behalf of the Bidder/ Contractor
(Office Seal)	(Office Seal)

Place----------

Date----------

Witness: _____	Witness: _____
(Name & Address) _____	(Name & Address)_____
_____	_____