Bharat Heavy Electricals Limited

Heavy Equipment Repair Plant

Tarna Shivpur Varanasi-221003
website: https://herp.bhel.com

Enquiry Number : **E-RC-304-25-0048-61-1** Date : **29/Apr/2025**

Enquiry For Material :-

Sl No	Material Description	Material Code	Quantity	Unit
1	HOUSING COVER WEAR SLEEVE (HY-337.16) AS PER DRG. 36130000688/03 WITH MATL AS PER DRG.	RV1019920378	800.0	NOS.
2	SEAL ASSLY AS PER DRG. 26118000689/01 WITH MATL. AS PER SPECN. ASTM B-584 GR. 86300 (HARDNESS 200-220 BHN)	RV1019924101	100.0	NOS
3	PACKING GLAND (HY-84.0) - FULLY M/CD BRONZE CASTING AS PER DRG. 46117600013/03 WITH MATL AS PER SPECN. AA19939/02	RV1980100012	72.0	NOS.
4	SPRING ADJ. BOLT BUSHING (HY-146.00) - BRONZE CASTING AS PER DRG. HY-146.00 REV-00 WITH MATL AS PER SPECN. AA19939/02	RV1980100063	150.0	NOS.
5	OIL PUMP BUSHING (HY-172.0) - FULLY M/CD BRONZE CASTING AS PER DRG. 26117600002/04 WITH MATL AS PER SPECN. AA19939/02	RV1980100071	90.0	NOS.
6	PACKING GLAND (HY-167.01.11) - FULLY M/CD BRONZE CASTING AS PER DRG. 36148000348/02 WITH MATL AS PER SPECN. AA19939/02	RV1980100080*	300.0	NOS.
7	PACKING GLAND (HY-167.01.13) - FULLY M/CD BRONZE CASTING AS PER DRG. 36148000350/04 WITH MATL AS PER SPECN. AA19939/02	RV1980100098	150.0	NOS
8	PACKING GLAND (HY-182.03) -- FULLY M/CD ITEM AS PER DRG. 36157600098 REV.01 WITH MATL. AS PER SPECN. AA19939/02	RV1980100110*	38.0	NOS
9	PACKING GLAND (HY-217.01.11) - FULLY M/CD CASTING AS PER DRG. 36146200343/01 WITH MATL. AS PER SPECN. AA19939/02	RV1980100215	24.0	NOS
10	PACKING GLAND (HY-960.01.A.11) - FULLY M/CD BRONZE CASTING AS PER DRG. 36149600216/04 WITH MATL AS PER SPECN. AA19939/02	RV1980100231	300.0	NOS
11	PACKING GLAND (HY-960.01.A.13) - FULLY M/CD BRONZE CASTING AS PER DRG. 36149600218/06 WITH MATL AS PER SPECN. AA19939/02	RV1980100240*	300.0	NOS
12	PACKING GLAND (HY-960.01.A.39) - FULLY M/CD BRONZE CASTING AS PER DRG. 36149600217/03 WITH MATL AS PER SPECN. AA19939/02	RV1980100258	300.0	NOS
13	PACKING GLAND AS PER DRG. XX-053.07 REV-00 WITH MATL. AS PER SPECN. AA19939/02	RV1980100272	144.0	NOS
14	FLANGED BUSHING (HY-207.17) - FULLY M/CD CASTING AS PER DRG. 46118000679/04 WITH MATL AS PER SPECN. AA19934/04	RV1990134017	232.0	NOS.
15	BUSH (HY-506.29) - FULLY M/CD ITEM AS PER DRG. 46515500056/01 WITH MATL AS PER SPECN. AA19934/03	RV1990134076	20.0	NOS.
16	SPRING ROD BUSHING (TY-188.04) - FULLY M/CD ITEM AS PER DRG. 46516000017/00 WITH MATL AS PER SPECN. AA19942/02	RV1994200014	28.0	NOS
17	DEFLECTOR BUSH (HY-401.23.02) FULLY M/CD ITEM AS PER DRG. 46137090130/01 WITH MATL. SPECN. AA19936/04	RV1995936057	308.0	NOS
18	SPRING STUD BEARING (HY-337.23) AS PER DRG. 36130000693/02 WITH MATL. AS PER DRG.	RV7215602109	600.0	NOS

Remarks

(A) SCOPE OF SUPPLY:-

1. THIS ENQUIRY HAS BEEN RAISED FOR ENTERING INTO AN FRAMEWORK AGREEMENT (VALUE WISE) FOR 2 YEARS FOR PROCUREMENT OF NON FERROUS CASTINGS . SEPARATE PO WILL BE GIVEN TIME TO TIME AS PER REQUIREMENT FOR PLACING THE PO UNDER THIS RC. ITEM QUANTITY MENTIONED IN THE INDENT IS TENTATIVE & IT MAY INCREASE OR DECREASE AS PER OUR FINAL REQUIREMENT.

2.THE % WEIGHTAGE FOR CALCULATING TOTAL COST OF INDIVIDUAL ITEM HAS BEEN ARRIVED CONSIDERING INDIVIDUAL ITEM'S CONTENT IN TOTAL ESTIMATED COST OF ALL THE ENQUIRY ITEMS. THE % WEIGHTAGE WILL BE AS PER ANNEXURE-IV.

3. VALUE WISE MEANS FA WILL DONE ON SINGLE SET BASIS FOR ALL THE 18 ITEMS WITH THEIR FULL QUANTITY AND NOT QUANTITY OF INDIVIDUAL ITEM.

4. RATE FOR INDIVIDUAL ITEM WILL BE ARRIVED AS PER PERCENTAGE WEIGHTAGE MENTIONED IN ANNEXURE- IV ATTACHED.

5. RATES OF ITEMS AGAINST FA WILL BE FIRM & VALID FOR ORDERING FOR A PERIOD OF TWO YEAR FROM THE RC-PO DATE. PRICE VARIATION CLAUSE (PVC) IS NOT ACCEPTABLE.

6. VENDOR HAS TO QUOTE FOR ALL THE 18 ITEMS OF TENDER ENQUIRY COMPULSORILY. IN CASE, ANY VENDOR QUOTES FOR PART ITEM, THEIR OFFER WILL NOT BE CONSIDERED FOR FURTHER EVALUATION.

7. L-1 VENDOR WILL BE DECIDED ON TOTAL COST ON SET BASIS.

8. RC QTY AGAINST EACH ITEM IS INDICATIVE ONLY. PO WILL BE PLACED BASED ON ACTUAL REQUIREMENT IRRESPECTIVE OF RC QUANTITY NOT EXCEEDING THE RATE CONTRACT VALUE.

AFTER FINALIIZATION OF RATE CONTRACT, PO QUANTITY WILL BE PLACED AS PER REQUIREMENT.

(B) (1)SUPPLY CONDITION FOR RV1019920378, RV7215602109 & RV1019924101 :

1. ITEM TO BE SUPPLIED AT BHEL HERP STORES.
2. PRE-DESPATCH INSPECTION WILL BE CARRIED OUT AS PER QUALITY PLAN RV/C&F/109 REV-02 AT PARTY'S WORKS BY BHEL REPRESENTATIVE.

(C) TECHNICAL DELIVERY CONDITION:
1. MATERIAL SHOULD BE AS PER SPECN. MENTIONED IN THE DRAWING/DESCRIPTION.
2. DIMENSIONS AND TOLERANCES TO BE MAINTAINED AS PER DRG.
3. GRAPHITE EPOXY BONDING TO BE DONE AS PER DRG.
4. DIMENSIONS REPORT IS REQUIRED.
5. NOTES ON THE DRG. SHOULD BE STRICTLY FOLLOWED.
6. FOR GRAPHITE BONDING, GRAPHITE ROD "GRADE GMMR-50" , SCHUTZ CARBON ELECTRODE PVT LTD & MTEG GR1 MAY BE USED AS AN ALTERNATE TO DYLON MAKE.

(D) SUPPLY CONDITION FOR REST ITEMS:

1. ITEM TO BE SUPPLIED AT BHEL HERP STORES.
2. PRE-DESPATCH INSPECTION WILL BE CARRIED OUT AS PER QUALITY PLAN RV/C&F/19 REV-02 AT PARTY'S WORKS BY BHEL REPRESENTATIVE.

(E) TECHNICAL DELIVERY CONDITION:
1. MATERIAL SHOULD BE AS PER SPECN. MENTIONED IN THE DRG./DESCRIPTION
2. DIMENSIONS AND TOLERANCES TO BE MAINTAINED AS PER DRG.
3. CASTING SHOULD BE FREE FROM ALL DEFECTS.
4. DIMENSION REPORT IS REQUIRED.
5. ALL THE NOTINGS MENTIONED IN THE DRG. SHOULD BE STRICTLY FOLLOWED.

(F) TEST CERTIFICATE: REQUIRED FOR CHEMICAL & MECHANICAL PROPERTIES OF RAW MATL.

(G) GUARANTEE CERTIFICATE: REQUIRED FOR 24 MONTHS AGAINST ANY MANUFACTURING DEFECTS FROM THE DATE OF RECIPT AT BHEL HERP.

(H) PACKING INSTRUCTIONS: ITEM SHOULD BE PROPERLY PACKED IN WOODEN BOX OF 1" THICK PLANK WITH 1.5"X4" BRACKET .

(I) RATE CONTRACT VALIDITY: FOR 2 (TWO) YEAR FROM THE RC-PO DATE.

(J) SPECIAL REMARKS:

1. ITEM WISE MAXIMUM QTY IN EACH LOT (WHICH MAY BE REQUIRED IN A PARTICULAR ORDER) WILL BE AS MENTIONED IN ANNEXURE--RC-LOT-BA23/01.

2. DELIVERY IS WITHIN 04 MONTHS FROM DATE OF PO FOR FIRST LOT.THERE WILL BE A GAP OF 01 MONTH BETWEEN TWO CONSECUTIVE LOTS.

(K) SPLITTING CONDITION:

1. THERE WILL BE SPLITTING BETWEEN TWO VENDORS IN THE RATIO OF L1:L2::60:40 .

2. THE EQUATED L1 RATES OF ITEMS WOULD BE COUNTER OFFERED TO THE NEXT HIGHER BIDDER IN ORDER OF THEIR RANKING AND THE QUANTITY WOULD BE GIVEN TO THE BIDDER WHO ACCEPT THE EQUATED L1 PRICE ON THE BASIS OF THEIR RANKING IN THE PRICE BID.

3. IF NONE OF THE OTHER BIDDERS ACCEPT THE L1 PRICE, THEN THE ENTIRE QUANTITY OF THE TENDER WOULD BE ORDERED TO THE ORIGINAL L1 PARTY ONLY.

4. AT ANY POINT OF TIME OR IF THE PERFORMANCE OF ANY VENDOR IS FOUND UNSATISFACTORY, THE ABOVE DISTRIBUTION RATIO MAY BE CANCELLED OR CHANGED BY BHEL AND ITEMS MAY BE PROCURED FROM PERFORMING VENDORS.

(L) REVERSE AUCTION (RA) WILL NOT BE CONDUCTED.

(M) CLAUSE FOR INTEGRITY PACT (IP) SHALL BE AS PER ANNEXURE-1 & 2 ATTACHED. BIDDER SHALL SUBMIT THE ATTACHED ANNEXURE-1 FILLED, SIGNED AND STAMPED.
(N) AN EMD AMOUNT OF RS. 6,00,000 IS APPLICABLE FOR THIS ENQUIRY EXCEPT FOR THE BIDDERS WHICH ARE:

(1) MICRO AND SMALL ENTERPRISES (MSES) OR STARTUPS AS RECOGNIZED BY DEPARTMENT FOR PROMOTION OF INDUSTRY AND INTERNAL TRADE (DPIIT).
(2) CENTRAL/STATE PSE
(3) MANUFACTURERS

(O)PERFORMANCE SECURITY: THE VENDOR IS REQUIRED TO SUBMIT A PERFORMANCE SECURITY EQUAL TO THE VALUE OF 05% (FIVE PERCENT) OF THE TOTAL ORDER VALUE VALID FOR 30 MONTHS FROM THE DATE PO. VENDOR HAS TO SUBMIT THE PERFORMANCE SECURITY WITHIN 14 DAYS FROM THE DATE OF PO.

PERFORMANCE SECURITY MAY BE FURNISHED IN THE FOLLOWING FORMS:

(I) LOCAL CHEQUES OF SCHEDULED BANKS (SUBJECT TO REALIZATION)/ PAY ORDER/ DEMAND DR AFT/ ELECTRONIC FUND TRANSFER IN FAVOUR OF BHEL.
(II)BANK GUARANTEE FROM SCHEDULED BANKS / PUBLIC FINANCIAL INSTITUTIONS AS DEFINED IN THE COMPANIES ACT. THE BANK GUARANTEE FORMAT SHOULD HAVE THE APPROVAL OF BHEL.
(III)SECURITIES AVAILABLE FROM INDIAN POST OFFICES SUCH AS NATIONAL SAVINGS CERTIFICAT ES, KISAN VIKAS PATRAS ETC. (HELD IN THE NAME OF CONTRACTOR FURNISHING THE SECURITY AND DULY ENDORSED/ HYPOTHECATED/ PLEDGED, AS APPLICABLE, IN FAVOUR OF BHEL).
(IV) INSURANCE SURETY BOND.
(NOTE: BHEL WILL NOT BE LIABLE OR RESPONSIBLE IN ANY MANNER FOR THE COLLECTION OF IN TEREST OR RENEWAL OF THE DOCUMENTS OR IN ANY OTHER MATTER CONNECTED THEREWITH).

(P)FORFEITURE OF PERFORMANCE SECURITY: THE PERFORMANCE SECURITY WILL BE FORFEITED AND CREDITED TO BHEL'S ACCOUNT IN THE EVENT OF A BREACH OF CONTRACT BY THE SUPPLIER.

(Q) OTHER TERMS & CONDITIONS OF THIS ENQUIRY SHALL BE AS PER ATTACHED GTC.

ANNEXURE--RC-LOT-BA23/01

S.NO	MATERIAL CODE	ITEM DESCRIPTION	QTY(NOS)	MAX LOT
1	RV1980100012	PACKING GLAND (HY-84.0) - FULLY M/CD BRONZE CASTING AS PER DRG. 46117600013/03 WITH MATL AS PER SPECN. AA19939/02	72	15
2	RV1980100063	SPRING ADJ. BOLT BUSHING (HY-146.00) - BRONZE CASTING AS PER DRG. HY-146.00 REV-00 WITH MATL AS PER SPECN. AA19939/02	150	20
3	RV1980100071	OIL PUMP BUSHING (HY-172.0) - FULLY M/CD BRONZE CASTING AS PER DRG. 26117600002/04 WITH MATL AS PER SPECN. AA19939/02	90	15
4	RV1980100080*	PACKING GLAND (HY-167.01.11) - FULLY M/CD BRONZE CASTING AS PER DRG. 36148000348/02 WITH MATL AS PER SPECN. AA19939/02	300	50
5	RV1980100098	PACKING GLAND (HY-167.01.13) - FULLY M/CD BRONZE CASTING AS PER DRG. 36148000350/04 WITH MATL AS PER SPECN. AA19939/02	150	25
6	RV1980100110*	PACKING GLAND (HY-182.03) -- FULLY M/CD ITEM AS PER DRG. 36157600098 REV.01 WITH MATL. AS PER SPECN. AA19939/02	38	10
7	RV1980100215	PACKING GLAND (HY-217.01.11) - FULLY M/CD CASTING AS PER DRG. 36146200343/01 WITH MATL. AS PER SPECN. AA19939/02	24	10
8	RV1980100231	PACKING GLAND (HY-960.01.A.11) - FULLY M/CD BRONZE CASTING AS PER DRG. 36149600216/04 WITH MATL AS PER SPECN. AA19939/02	300	50
9	RV1980100240*	PACKING GLAND (HY-960.01.A.13) - FULLY M/CD BRONZE CASTING AS PER DRG. 36149600218/06 WITH MATL AS PER SPECN. AA19939/02	300	50
10	RV1980100258	PACKING GLAND (HY-960.01.A.39) - FULLY M/CD BRONZE CASTING AS PER DRG. 36149600217/03 WITH MATL AS PER SPECN. AA19939/02	300	50
11	RV1980100272	PACKING GLAND AS PER DRG. XX-053.07 REV-00 WITH MATL. AS PER SPECN. AA19939/02	144	35
12	RV1990134017	FLANGED BUSHING (HY-207.17) - FULLY M/CD CASTING AS PER DRG. 46118000679/04 WITH MATL AS PER SPECN. AA19934/04	232	70
13	RV1990134076	BUSH (HY-506.29) - FULLY M/CD ITEM AS PER DRG. 46515500056/01 WITH MATL AS PER SPECN. AA19934/03	20	10
14	RV1994200014	SPRING ROD BUSHING (TY-188.04) - FULLY M/CD ITEM AS PER DRG. 46516000017/00 WITH MATL AS PER SPECN. AA19942/02	28	10
15	RV1995936057	DEFLECTOR BUSH (HY-401.23.02) FULLY M/CD ITEM AS PER DRG. 46137090130/01 WITH MATL. SPECN. AA19936/04	308	50
16	RV1019920378	HOUSING COVER WEAR SLEEVE (HY-337.16) AS PER DRG. 36130000688/03 WITH MATL AS PER DRG.	800	80
17	RV7215602109	SPRING STUD BEARING (HY-337.23) AS PER DRG. 36130000693/02 WITH MATL. AS PER DRG.	600	50
18	RV1019924101	SEAL ASSLY AS PER DRG. 26118000689/01 WITH MATL. AS PER SPECN. ASTM B-584 GR. 86300 (HARDNESS 200-220 BHN)	100	20

ESTIMATION SHEET SUMMARY

ANNEXURE-IV

S.NO	MATERIAL CODE	ITEM DESCRIPTION	QTY(NOS)	% WEIGHTAGE
1	RV1980100012	PACKING GLAND (HY-84.0) - FULLY M/CD BRONZE CASTING AS PER DRG. 46117600013/03	72	1.44%
2	RV1980100063	SPRING ADJ. BOLT BUSHING (HY-146.00) - BRONZE CASTING AS PER DRG. HY-146.00 REV-00	150	12.75%
3	RV1980100071	OIL PUMP BUSHING (HY-172.0) - FULLY M/CD BRONZE CASTING AS PER DRG. 26117600002/04	90	17.70%
4	RV1980100080*	PACKING GLAND (HY-167.01.11) - FULLY M/CD BRONZE CASTING AS PER DRG. 36148000348/02	300	2.02%
5	RV1980100098	PACKING GLAND (HY-167.01.13) - FULLY M/CD BRONZE CASTING AS PER DRG. 36148000350/04	150	1.99%
6	RV1980100110*	PACKING GLAND (HY-182.03) -- FULLY M/CD ITEM AS PER DRG. 36157600098 REV.01	38	0.20%
7	RV1980100215	PACKING GLAND (HY-217.01.11) - FULLY M/CD CASTING AS PER DRG. 36146200343/01	24	0.31%
8	RV1980100231	PACKING GLAND (HY-960.01.A.11) - FULLY M/CD BRONZE CASTING AS PER DRG. 36149600216/04	300	2.19%
9	RV1980100240*	PACKING GLAND (HY-960.01.A.13) - FULLY M/CD BRONZE CASTING AS PER DRG. 36149600218/06	300	4.22%
10	RV1980100258	PACKING GLAND (HY-960.01.A.39) - FULLY M/CD BRONZE CASTING AS PER DRG. 36149600217/03	300	2.19%
11	RV1980100272	PACKING GLAND AS PER DRG. XX-053.07 REV-00 WITH MATL. AS PER SPECN. AA19939/02	144	0.77%
12	RV1990134017	FLANGED BUSHING (HY-207.17) - FULLY M/CD CASTING AS PER DRG. 46118000679/04	232	0.25%
13	RV1990134076	BUSH (HY-506.29) - FULLY M/CD ITEM AS PER DRG. 46515500056/01	20	0.07%
14	RV1994200014	SPRING ROD BUSHING (TY-188.04) - FULLY M/CD ITEM AS PER DRG. 46516000017/00 WITH MATL AS PER SPECN. AA19942/02	28	0.03%
15	RV1995936057	DEFLECTOR BUSH (HY-401.23.02) FULLY M/CD ITEM AS PER DRG. 46137090130/01	308	0.27%
16	RV1019920378	HOUSING COVER WEAR SLEEVE (HY-337.16) AS PER DRG. 36130000688/03 WITH MATL AS PER DRG.	800	20.86%
17	RV7215602109	SPRING STUD BEARING (HY-337.23) AS PER DRG. 36130000693/02 WITH MATL. AS PER DRG.	600	23.18%
18	RV1019924101	SEAL ASSLY AS PER DRG. 26118000689/01 WITH MATL. AS PER SPECN. ASTM B-584 GR. 86300 (HARDNESS 200-220 BHN)	100	9.56%
			3956	100%

TOTAL NO OF ITEMS(NOS)	**3956**

PQR for Crirical Regular Direct Mil items

PQR Ref No: PQR/24-25/ Crirical Regular Direct Mil items	**Date: 23.08.2024**
Rev No: 00	**Review Date: 23.08.2024**
PQR Revision Date:	

Sl. No.	BHEL Terms	Supplier's ComplianceYES/NO
1	**Offers are accepted from:**	
1.a	Only Manufacturer's Offers shall be considered for the Tender Enquiry.	
2	**Supplier shall give list of In-House Facilities:**	
2.a	Vendor shall have in-House necessary Manufacturing facilities required for manufacturing and supply of item/s as per drawing/specification.	
2.b	BHEL reserves right to visit the Works of the Manufacturer for Physical verification of the Manufacturing facilities (as declared by them) and assessment of their Quality systems during Technical Evaluation of the Offers.	
2.c	Bidders shall submit detailed Manufacturing process Plan along with the Technical Offer.	
3	**Experience:**	
3.a	Bidders shall submit the necessary documents proving their Experience in Supplying same or similar items to any Power Plant equipment Manufacturer (worldwide or within India) in last three years from the date of Enquiry. Documentary evidances to be submitted in the form of Customer's Purchase Order copies / Material Acceptance Report and item drawings/specifications. Documentary evidences submitted shall strictly meet all the technical requirement of the NIT.	
3.b	BHEL reserves right to verify the details from the Bidder's customers based on Documents submitted as a part of past experience. BHEL may ask for other relevant documents in line with above to review the capacity and capability of vendor with respect to enquired items.	
4	**Financial Capability:**	
4.a	**Turn Over:-** Turn over of Non-MSe vendors should be 100% of tender value. Relaxation for MSe vendors/ Notified Start-Ups on turn over will be as per MSME guidelines. UDYAM Certificate required for Mse status.	
4.b	Applicable only for Non-Mse vendors: Audited balance Sheet and Profit and Loss account Statement of last three consecutive year (with UDIN) required along with part-1 bid. Or A CA Certified Consolidated summary (with UDIN) for last 3 consecutive years having annual turn over and Profit and Loss to be enclosed along with Part-1 bid . For Vendors having Turn over less than 1 crore in any of the financial year, CA certified Financial Turn over and Profit Loss (with UDIN) may be accepted for that year only.	

Note-1: Non Submission of the above requested documents/non compliance to the above points will result in rejection of the Offers without further Notice/Intimation to the Bidder and no correspondance will be entertained at later date.

Note-2: "Similar items" means items having same/similar manufacturing process,similar nature of use of item as that of enquired items etc.

GENERAL COMMERCIAL TERMS & CONDITIONS OF ENQUIRY
(FOR INDIAN VENDORS)

Amendment- 25
ANNEXURE-A

ITEM DESCRIPTION:
ENQUIRY NO:

Sl No	BHEL STANDARD TERMS &CONDITIONS	Confirmation of supplier (Yes/No)
1	A) OFFER MUST BE SUBMITTED IN TWO PART BID SYSTEM NAMELY TECHNO-COMMERCIAL BID & PRICE BID FOR THE ITEM AS PER ENQUIRY IN SEPARATE SEALED COVERS: (I) TECHNO – COMMERCIAL BID & (II) PRICE BID SHOULD BE CLEARLY SUPERSCRIBED THE ENQUIRY NO. AND DUE DATE ON THE ENVELOPES. (B) UN-PRICED OFFER WITH TECHNICAL BID IS REQUIRED TO BE FURNISHED BY THE VENDOR. TECHNICAL OFFER SHOULD CLEARLY REFLECT AT LEAST OUR MATERIAL CODE, ITEM DESCRIPTION & QUANTITY. (C) THE DIFFERENCE BETWEEN "UN-PRICED OFFER" AND "PRICED OFFER" SHOULD BE ONLY THE PRICES WHEREVER APPLICABLE. THE RATES AND AMOUNT SHOULD BE CLEARLY WRITTEN IN FIGURES AND WORDS BOTH WITHOUT ANY CUTTING / OVERWRITING. (D) **IMPORTANT POINT FOR VENDOR WHO HAVE NOT SUBMITTED THE SRF (SUPPLIER REGISTRATION FORM) SO FAR**: THE VENDORS, WHO HAVE NOT SUBMITTED THE SRF SO FAR, MUST SUBMIT THE SAME ALONG WITH PART- 1 BID. THE SRF TO BE DOWNLOADED FROM WWW.BHEL.COM OR https://herp.bhel.com .	
2	BID SHOULD BE FREE FROM CORRECTION, OVERWRITING, USING CORRECTIVE FLUID, ETC. ANY INTERLINEATION , CUTTING , ERASURE OR OVERWRITING SHALL BE VALID ONLY IF THEY ARE ATTESTED UNDER FULL SIGNATURE(S) OF PERSON(S) SIGNING THE BID ELSE BID SHALL BE LIABLE FOR REJECTION .	
3	YOUR TECHNO COMMERCIAL BID SHOULD MENTION THAT PRICE BID HAS BEEN SENT IN A SEPARATE ENVELOPE GIVING ITS REFERENCE.	
4	VENDOR TO ENSURE THAT ITEM & QUANTITY MENTIONED IN THE OFFERS ARE EXACTLY SAME AS PER ENQUIRY. IF ANY DEVIATION IS THERE PARTY MUST MENTION SPECIFIC HEREWITH OTHERWISE BHEL SHALL CONSIDER THAT ITEM & QUANTITY AS REQUIRED IN ENQUIRY.	
5	PLEASE MAKE SURE THAT THERE IS NO DISCREPANCY IN BETWEEN ACCEPTED TERMS & CONDITIONS MENTIONED IN THE CHECK LIST AND QUOTATION SUBMITTED BY VENDOR AND IF FOUND SO THEN THE TERMS & CONDITIONS WHICH ARE BENEFICIAL TO BHEL WOULD ONLY BE CONSIDERED.	
6	THE TENDER RECEIVED AFTER 14:00 HRS ON THE DUE DATE WILL NOT BE CONSIDERED.	
7	PART-I CONTAINING THE TECHNO-COMMERCIAL BID WILL BE OPENED ON THE DATE AND TIME SPECIFIED IN THE ENQUIRY, IN THE PRESENCE OF THOSE TENDERERS WHO WISH TO ATTEND. PART-II i.e., PRICE BID WILL BE OPENED ONLY OF THOSE BIDDERS WHO ARE FOUND TECHNO-COMMERCIALLY SUITABLE AFTER SCRUTINY OF THEIR PART-I OFFERS.	
8	NO REVISED OFFERS WILL BE ACCEPTED UNLESS ASKED BY BHEL AFTER OPENING OF PART-1 BID IN ANY CASE.	
9	THE RATE OF GST SHOULD BE CLEARLY MENTIONED IN THE OFFER.	
10	VALIDITY OF OFFER SHOULD BE MINIMUM 90 DAYS FROM THE DATE OF TECHNO - COMMERCIAL BID OPENING OR 60 DAYS FROM THE REVERSE AUCTION DATE.	
11	BHEL RESERVES THE RIGHT TO REJECT THE OFFER, WHICH IS HAVING DEVIATIONS TO THE TERMS AND CONDITIONS GIVEN IN THE TENDER ENQUIRY.	
12	**PRICING TERMS**: PRICES ONCE QUOTED SHALL REMAIN FIRM WITHIN THE VALIDITY OR ANY EXTENSION THEREOF FOR PLACEMENT OF ORDER, TILL COMPLETE EXECUTION OF THE ORDER, WITHOUT ANY ESCALATION/INCREASE FOR ANY REASON, WHATSOEVER, UNLESS SPECIFICALLY PROVIDED FOR IN THE ENQUIRY & PO. IN CASE OF FOREIGN VENDORS, THE QUOTED PRICE SHALL BE TAKEN AS INCLUSIVE OF THIRD PARTY INSPECTION AND TESTING CHARGES AS CALLED FOR IN THE NIT.	
13	**BID EVALUATION:** UNLESS SPECIFIED IN THE TENDER, VENDOR MUST NOTE THAT BHEL WILL ARRIVE THE L1 STATUS FOR EACH ITEM ON LANDED COST BASIS. ACCORDINGLY, ORDER SHALL BE PLACED ON LOWEST BIDDER ON INDIVIDUAL ITEM BASIS ONLY, UNLESS BHEL ASK FOR TERMS OTHER THAN THIS ON EXCEPTION BASIS. IN THE COURSE OF EVALUATION, IF MORE THAN ONE BIDDER HAPPENS TO OCCUPY L-1 STATUS, EFFECTIVE L-1 WILL BE DECIDED BY SOLICITING DISCOUNTS FROM THE RESPECTIVE L-1 BIDDERS. IN CASE MORE THAN ONE BIDDERS HAPPENS TO OCCUPY THE L-1 STATUS EVEN AFTER SOLICITING DISCOUNST, THE L-1 BIDDER SHALL BE DECIDED BY A TOSS/DRAW OF LOTS, IN THE PRESENCE OF THE RESPECTIVE BIDDER(S) OR THEIR REPRESENTATIVE(S). RANKING WILL BE DONE ACCORDINGLY. BHEL'S DECISION IN SUCH SITUATION SHALL BE FINAL AND BINDING.	
14	**TERMS OF DELIVERY:** **I. FOR INDIGENOUS SUPPLIERS**: THE TERMS OF DELIVERY SHOULD BE QUOTED ON F.O.R. DESTINATION (BHEL HERP STORES VARANASI) BASIS ONLY (i.e. FREIGHT & INSURANCE ON VENDOR'S ACCOUNT ONLY). IF ANY BIDDER STILL QUOTES OTHER DELIVERY TERM IN PLACE OF BHEL HERP STORES, THEIR OFFER MAY NOT BE CONSIDERED FOR FURTHER PROCESSING. IT MUST BE SPECIFICALLY NOTED.	
15	IF ANY INDIAN SUPPLIERS ARRANGE SUPPLY FROM FOREIGN PRINCIPLES/WORKS, TERMS OF DELIVERY SHOULD BE QUOTED ON CIF JNPT MUMBAI (INDIA) SEA PORT BASIS ONLY (i.e. FREIGHT & INSURANCE ON VENDOR'S ACCOUNT UPTO JNPT MUMBAI (INDIA) SEA PORT) OR CFR MUMBAI AIRPORT. HOWEVER FREIGHT CHARGES AS PER BHEL TRANSPORT CONTRACT FROM JNPT MUMBAI SEAPORT/MUMBAI AIRPORT TO BHEL VARANASI FOR EACH ITEM WILL BE LOADED AT THE TIME OF TOTAL LANDED COST CALCULATION.	
16	INSURANCE CHARGES SHALL BE TO VENDOR'S ACCOUNT ONLY IF PRICE QUOTED ON BHEL HERP STORES BASIS. IN CASE PRICE QUOTED IS ON CIF JNPT MUMBAI BASIS/ CFR MUMBAI AIRPORT BASIS, INSURANCE UP TO CIF JNPT MUMBAI/ MUMBAI AIRPORT SHALL BE IN VENDOR ACCOUNT.	
17	**PAYMENT TERMS:** **I.FOR MSEs VENDORS:** 100% AGAINST SRV WITHIN 45 DAYS THROUGH EFT (ELECTRONIC FUND TRANSFER) FROM THE DATE OF RECEIPT OF MATERIAL (DATE OF SRV) AT BHEL HERP VARANASI STORES AS PER PO. II.**FOR MEDIUM ENTERPRISES VENDORS**: 100% AGAINST SRV WITHIN 60 DAYS THROUGH EFT (ELECTRONIC FUND TRANSFER) FROM THE DATE OF RECEIPT OF MATERIAL (DATE OF SRV) AT BHEL HERP VARANASI STORES AS PER PO. **III. FOR NON- MSME:** 100% AGAINST SRV WITHIN 90 DAYS THROUGH EFT (ELECTRONIC FUND TRANSFER) FROM THE DATE OF RECEIPT OF MATERIAL (DATE OF SRV) AT BHEL HERP VARANASI STORES AS PER PO. **IV.BHEL HERP WILL MAKE PAYMENTS IN TWO PARTS: -** **PART-I:** BASIC INVOICE VALUE AND ALL OTHER CHARGES (EXCEPT GST AMOUNT) WILL BE PAID AS PER P.O. PAYMENT TERMS. **PART-II**: GST PORTION OF INVOICE VALUE WILL BE PAID ONLY AFTER FULFILLING FOLLOWING CONDITIONS: **(A)** PAYMENT OF GST AMOUNT INTO GOVT. ACCOUNT BY SUPPLIER AGAINST INVOICE RAISED TO BHEL. **(B)** FILING OF GST RETURN **(C)** DISPLAY OF GST CREDIT AGAINST BHEL GSTIN NO.09AAACB4146P2ZC IN GSTR-2B ON GSTN PORTAL. Note: 1. PAYMENT WILL BE MADE AFTER ACCEPTANCE OF MATERIAL. 2. ADVANCE PAYMENT IS NOT ACCEPTABLE BY BHEL HERP VARANASI IN ANY CASE. 3. IF ANY SUPPLIER FALLS UNDER "NON MSE" OR "NON MEDIUM" CATEGORY, THEIR PAYMENT TERM WILL BE CONSIDERED AS NON MSME SUPPLIER PAYMENT WITHOUT ANY INTIMATION.	
18	**LOADING OF PAYMENT TERM:** IN CASE OF DEVIATION, LOADING OF INTEREST RATE @SBI MCLR RATE + 6% (AS ON PART-1 OPENING DATE) SHALL BE LOADED WHILE ARRIVING AT LANDED COST TO BHEL.	
19	**LIQUIDATED DAMAGES/ LATE DELIVERY (LD) PENALTY CLAUSE:** SUBJECT TO FORCE MAJEURE CONDITIONS, FAILURE TO SUPPLY WITHIN PURCHASE ORDER DELIVERY SCHEDULE WILL MAKE THE SUPPLIER LIABLE TO AN UNCONDITIONAL PENALTY OF 0.5 % PER WEEK OR PART THEREOF SUBJECT TO THE MAXIMUM OF 10% OF THE UNDELIVERED PURCHASE ORDER VALUE EXCLUDING TAXES & DUTIES. NO GRACE PERIOD SHALL BE GIVEN.	
20	**LOADING OF LIQUIDATED DAMAGES (LD):** DEVIATION TO ABOVE STANDARD PENALTY CLAUSE, MAXIMUM LOADING OF 10% (IN CASE OF NON ACCEPTANCE OF LD CLAUSE) OR PART THEREOF (IN CASE OF PART ACCEPTANCE OF LD) SHALL BE LOADED WHILE ARRIVING LANDED COST TO BHEL. **LOADING OF DELIVERY TERM:** FURTHER IF DEVIATION IS FOUND IN THE ACCEPTED DELIVERY TERM AS WELL AS ACCEPTED PENALTY TERM, SUITABLE LOADING BASED ON TRANSPORTATION TIME TO BE TAKEN SHALL BE LOADED WHILE ARRIVING LANDED COST TO BHEL HERP STORES WHICH MAY BE AS BELOW: (i) 1% OF THE BASIC COST FOR INDIAN SUPPLIERS,	

21	**DELIVERY PERIOD:** VENDOR SHOULD STRICTLY QUOTE THE DELIVERY PERIOD AS MENTIONED IN NIT.	
22	IF ANY VENDOR DOES NOT SUPPLY THE ITEM WITHIN THE PURCHASE ORDER DELIVERY PERIOD, BHEL MAY/MAY NOT ACCEPT THE SUPPLY AT ITS SOLE DISCRETION.	
23	**BANK GUARANTEE:** THE COST OF BHEL FREE ISSUE MATERIALS PER SET/PER ASSEMBLY AND TOTAL COST OF FIM FOR THE ENQUIRY ARE MENTIONED IN NIT. IN THIS REGARD: 1 (a). PARTY WILL HAVE TO SUBMIT EQUAL AMOUNT OF SECURITY DEPOSIT **(IN THE FORM OF 10% BG/FDR/DD/CHEQUE/BANK TRANSFER AND 90% INDEMNITY BOND)** TOWARDS THE COST OF BHEL MATERIALS TO BE ISSUED TO THEM BEFORE THE ISSUE OF BHEL MATERIALS TO THEM. AT ANY POINT OF TIME, PROPORTIONATE SECURITY DEPOSIT OF TOTAL/CUMMULATIVE MATERIAL VALUE SHOULD BE MAINTENED. (b) **IN CASE OF TRIAL/DEVELOPMENTAL ORDER, PARTY WILL HAVE TO SUBMIT 30% BG/FDR/DD/CHEQUE/BANK TRANSFER AND 70% INDEMNITY BOND TOWARDS THE COST OF BHEL FIM**. 2. BHEL MAY ASK THE SUPPLIER FOR SUBMISSION OF FULL SECURITY DEPOSIT AMOUNT OR PART DEPENDING UPON THE AVAILABILITY OF FREE ISSUE MATERAILS AT OUR END. 3. PARTY MUST HAVE TO SUBMIT THE SAME WITHIN 02 WEEK TIME FROM THE DATE OF WRITTEN INTIMATION BY BHEL WITHOUT FAIL OTHERWISE IT WOULD TREATED AS FAILURE OF HONOURING PO TERMS AND ACCORDINGLY BHEL MAY CANCEL THE PURCHASE ORDER AND INITIATE ALTERNATE PROCUREMENT ACTION AT SUPPLIER RISK & COST. 4. IN CASE OF ABSENCE OF DESIRED SECURITY DEPOSIT AT BHEL END AND ALSO NON RESPONSE OF POINT NO. 03 AS ABOVE, I. BHEL MAY HOLD THE PENDING PAYMENTS OF SUPPLIER AVAILABLE AT BHEL **ON THEIR CONSENT.** II. IF NO PAYMENT IS PENDING AT BHEL END, ACTION FOR ALTERNATE PROCUREMENT ACTION MAY BE INITIATED. **5. THE FORMAT OF BG AND IB SHALL BE PER ATTACHED ANNEXURE-BG/FIM AND IB-FIM RESPECTIVELY**.	
24	TRANSPORTATION CHARGES FOR SENDING BHEL FREE ISSUE MATERIALS (FIM) TO THE PARTY WORKS WILL BE BORNE BY BHEL ONLY. THE FREIGHT CHARGES FOR SENDING THE BHEL FIM FROM HERP STORES TO PARTY'S WORK FOR EACH ITEM WILL BE LOADED AS PER BHEL TRANSPORT CONTRACT AT THE TIME OF TOTAL LANDED COST CALCULATION. HOWEVER, VARANASI/LOCAL BASED VENDORS WILL LIFT THE FIM FROM BHEL STORES AND BORNE ITS TRANSPORTATION CHARGES.	
25	IF BHEL ISSUES FREE ISSUE MATERIALS TO THE SUPPLIER, IT MUST BE RETURNED WITHIN THE TIME LIMIT AS PRESCRIBED IN GST LAW (PRESENTLY 01 (ONE) YEAR FROM THE DATE OF FREE ISSUE DATE) TO COMPLY THE GST RULES. IF ANY VENDOR DOES NOT RETURN THE BHEL FREE ISSUE MATERIALS AS MENTIONED ABOVE, THE FINANCIAL IMPLICATION ON ACCOUNT OF THIS, IF ANY, SHALL BE RECOVERED FROM THE PARTY BILLS.	
26	**REVERSE AUCTION**: BHEL SHALL BE RESORTING TO REVERSE AUCTION (RA) (GUIDELINES AS AVAILABLE ON WWW.BHEL.COM) FOR THIS TENDER. RA SHALL BE CONDUCTED AMONG ALL THE TECHNO-COMMERCIALLY QUALIFIED BIDDERS. PRICE BIDS OF ALL TECHNO-COMMERCIALLY QUALIFIED BIDDERS SHALL BE OPENED AND SAME SHALL BE CONSIDERED AS INITIAL BIDS OF BIDDERS IN RA. IN CASE ANY BIDDER(S) DO (ES) NOT PARTICIPATE IN ONLINE REVERSE AUCTION, THEIR SEALED ENVELOPE PRICE BID ALONG WITH APPLICABLE LOADING, IF ANY, SHALL BE CONSIDERED FOR RANKING.	
27	IF ANY OF THE VENDORS DO NOT ACCEPT THE ABOVE POINT MENTIONED AT SL. NO. 26, THEIR OFFER MAY BE LIABLE FOR REJECTION WITHOUT INTIMATION.	
28	**RISK PURCHASE**: IN CASE OF DELAY IN SUPPLIES/ DEFECTIVE SUPPLIES/NON EXECUTION OF PURCHASE ORDER ETC. (FOR DETAILS, REFER GUIDELINES FOR RISK PURCHASE), BHEL MAY CANCEL THE ORDER IN FULL OR PART THEREOF/ MAY ALSO MAKE THE PURCHASE OF SUCH MATERIALS FROM ELSEWHERE/ALTERNATIVE SOURCES AT THE RISK & COST OF SUPPLIER.BHEL MAY ALSO MANUFACTURE THE ITEM IN-HOUSE IN PART OR FULL DEPENDING UPON THE URGENCY OF THE ITEM. GUIDELINES FOR **RISK PURCHASE** IS AVAILABLE ON BHEL WEBSITE "https://herp.bhel.com" at "Notice". RESPECTIVE BIDDERS / SUPPLIERS MAY REFER THIS GUIDELINE BEFORE SUBMITTING THEIR OFFER AGAINST BHEL, HERP TENDER ENQUIRIES. IN CASE RISK PURCHASE IS APPLIED, BHEL SHALL TAKE ACTION AGAINST THE NON-PERFORMING AND/OR DEFAULTING SUPPLIERS/ CONTRACTORS IN LINE WITH THIS GUIDELINE ONLY.	
29	BHEL MAY SHORT CLOSE/CANCEL AN ORDER AT ANY TIME DURING THE CURRENCY OF THE CONTRACT/PO IRRESPECTIVE OF THE PO DELIVERY DATE, IF (I) THE WORK PROGRESS OF THE VENDOR IS POOR, OR (II) THE DELIVERY REQUIREMENT OF THE ITEM IS VERY CRITICAL & NOT BEING MET BY THE VENDOR ON WHICH ORDER HAS BEEN PLACED, OR (III) THERE IS NO RESPONSE FOR IMPROVEMENT IN DELIVERY AS PER BHEL REQUIREMENT,	
30	THE OFFERS OF THE BIDDERS WHO ARE ON THE BANNED LIST AND ALSO THE OFFER OF THE BIDDERS, WHO ENGAGE THE SERVICES OF THE BANNED FIRMS, SHALL BE REJECTED. THE LIST OF BANNED FIRMS IS AVAILABLE ON BHEL WEB SITE www.bhel.com	
31	**RESERVATION RIGHTS OF BHEL**: – BHEL RESERVES THE RIGHT TO REJECT ANY OR ALL QUOTATIONS WITHOUT ASSIGNING ANY REASONS THEREOF. BHEL ALSO RESERVES THE RIGHT TO INCREASE OR DECREASE THE TENDERED QUANTITIES. VENDORS SHOULD BE PREPARED TO ACCEPT ORDER FOR REDUCED QUANTITIES WITHOUT ANY EXTRA CHARGES. VENDOR SHOULD ALSO BE PREPARED FOR GIVING DISCOUNT IN CASE OF INCREASE IN QUANTITY.	
32	**NON-DISCLOSURE AGREEMENT**: ALL DRAWINGS AND STANDARDS ARE PROPRIETARY OF BHEL. IT MUST NOT BE USED IN ANY WAY DETRIMENTAL TO THE INTEREST OF THE COMPANY. ALL SUPPLIERS SHALL FURNISH NDAS (NON-DISCLOSURE AGREEMENT) AGAINST USE OF DOCUMENTS FURNISHED BY BHEL TOWARDS UN-AUTHORIZED USE EXCEPT FOR THE PURPOSE IT HAS BEEN FURNISHED.	
33	**A. SETTLEMENT OF DISPUTES & ARBITRATION:** I.ALL QUESTIONS/INTERPRETATIONS REGARDING SUBJECT MATTER OF THE CONTRACT SHALL BE DECIDED BY THE BHEL ON THE REQUEST OF THE VENDOR AND THE DECISION OF THE BHEL SHALL BE FINAL. II.IN CASE OF DISPUTE, STEPS SHALL BE TAKEN BY THE PARTIES TO THE CONTRACT TO SETTLE THE SAME THROUGH NEGOTIATIONS. III.IN CASE, DISPUTE IS NOT SETTLED IN NEGOTIATIONS, IT SHALL BE REFERRED TO CONCILIATOR APPOINTED BY THE COMPETENT AUTHORITY OF THE BHEL. *THE CONCILIATION PROCEEDINGS WITH RESPECT TO A DISPUTE AS DEFINED IN THE BHEL CONCILIATION SCHEME, 2018 AND SUBSEQUENT REVISIONS CAN BE INITIATED UNDER THE SCHEME AT ANY STAGE WHETHER BEFORE, DURING OR EVEN AFTER THE COMMENCEMENT OF ARBITRATION PROCEEDINGS OR LITIGATION BEFORE COURTS. THIS CONCILLIATION SCHEME IS AVAILABLE ON OUR WEBSITES* https://herp.bhel.com *AND* ***www.bhel.com*** . IV.IN CASE DISPUTE IS NOT SETTLED IN CONCILIATION PROCEEDINGS, THE SAME SHALL BE REFERRED TO ARBITRATION AS PER CORPORATE GUIDELINES OF THE BHEL AND THE ARBITRATION PROCEEDING SHALL BE CONDUCTED AS PER PROVISIONS OF THE ARBITRATION AND CONCILIATION ACT, 1996 READ WITH CORPORATE GUIDELINE AS AMENDED FROM TIME TO TIME. V.THE VENDOR SHALL CONTINUE TO PERFORM THE CONTRACT, PENDING SETTLEMENT OF DISPUTE(S). **B.JURISDICTION:** ALL DISPUTES OR DIFFERENCES ARISING OUT OF OR IN CONNECTIONS WITH THE CONTRACT SHALL BE SUBJECT TO THE EXCLUSIVE JURISDICTION OF THE COURT AT VARANASI (U.P.) ONLY.	
34	**SPECIAL NOTE FOR BIDDERS**: THE QUOTATION SHOULD BE FROM PRINCIPAL / ORIGINAL EQUIPMENT MANUFACTURER ONLY. THE OFFER OF THOSE OEM, AUTHORISING THEIR TRADER / DEALER / DISTRIBUTOR TO QUOTE AND TAKE ORDER IS LIABLE FOR DISQUALIFICATION. SINCE BHEL PREFER TO DEAL DIRECTLY WITH OEM AND NOT THROUGH DEALER / TRADER / DISTRIBUTOR OF OEM, THEREFORE, OEM MUST DIRECTLY QUOTE, TAKE ORDER AND DELIVER THE MATERIAL UNDER THEIR GUARANTEE / WARRANTEE.	
35	I. FOLLOWING DOCUMENTS SHOULD BE ENCLOSED AND ADDRESSED TO DGM (FINANCE) AND SAME SHALL BE DISPATCHED TO MM DEPTT. BHEL, HERP, TARNA, SHIVPUR, VARANASI-221003 FOR PAYMENT PURPOSE: a) 05 (FIVE) COPIES OF GST INVOICES b) COPY OF GR/RR. c) TEST CERTIFICATE AND GUARANTEE/WARRANTEE CERTIFICATE AND PDI REPORT, IF APPLICABLE. (ONE COPY). II. FURTHER TO ABOVE, 02 (TWO) COMPLETE SETS OF DOCUMENTS (COPIES OF ABOVE MENTIONED DOCUMENTS AT SL. NO. I FOR INDIAN SUPPLIERS (UNDER THIS CLAUSE) SHALL BE SENT FOR PURCHASE AND QUALITY DEPARTMENTS. ORIGINAL COPIES OF TC, GC, PDI REPORTS & OTHER QUALITY PAPERS SHALL BE ATTACHED IN THE SET OF DOCUMENTS FOR QUALITY DEPARTMENTS. III. THE VENDOR SHOULD PROVIDE BILLS & OTHER DOCUMENTS COMPLETE IN ALL RESPECT AS PER PURCHASE ORDER ALONGWITH DESPATCH OF MATERIALS**.** BHEL SHALL SEEK CLARIFICATION(S) (IF ANY) RELATED TO PAYMENT DOCUMENTS IN ONE GO. THE VENDOR SHOULD PROVIDE ALL SUCH CLARIFICATION(S) IMMEDIETLY.ANY DELAY IN PROCESSING OF PAYMENT, DUE TO NON RECEIPT OF CLARIFICATION(S) SOUGHT BY BHEL, SHALL BE ATTRIBUTABLE COMPLETELY TO VENDOR. IV. DIGITALLY SIGNED INVOICE IS ALSO ACCEPTABLE FOR PROCESSING OF PAYMENT.	

36	THE VENDOR SHALL ENSURE THAT THEIR BANK DETAILS ARE UPDATED WITH US FOR TIMELY PAYMENT THROUGH EFT (ELECTRONICS FUND TRANSFER).	
37	**GUIDELINES FOR SUSPENSION OF BUSINESS DEALINGS WITH SUPPLIERS/ CONTRACTORS:** THE REVISED GUIDELINES FOR SUSPENSION OF BUSSINESS DEALINGS ARE AVAILABLE ON BHEL WEBSITE AT "www.bhel.com" on "SUPPLIER REGISTRATION PAGE". RESPECTIVE BIDDERS / SUPPLIERS MAY REFER THIS BEFORE QUOTING AS PER THEIR REQUIREMENT. ACTION AGAINST THE DEFAULTED SUPPLIERS/ CONTRACTORS' SHALL BE TAKEN AS PER THESE GUIDELINES ONLY.	
38	VENDOR MUST FOLLOW THE SEQUENTIAL DELIVERY SCHEDULE i.e. ITEMS TO BE SUPPLIED IN SUCH A MANNER THAT THE PURCHASE ORDER HAVING OLDER DELIVERY SCHEDULE SHOULD BE SUPPLIED EARLIER AND PURCHASE ORDER HAVING LATTER DELIVERY SCHEDULE TO BE SUPPLIED LATTER. IF ANY VENDOR DOES NOT FOLLOW THE SEQUENTIAL DELIVERY SCHEDULE ESPECIALLY FOR SAME ITEM, BHEL MAY ACCOUNT FOR THE ITEM IN SEQUENTIAL MANNER OR MAY RECOVER THE FINANCIAL IMPLICATION.	
39	ALL ABOVE ACCEPTED TERMS & CONDITIONS SHALL BE PART OF PURCHASE ORDER WITH OR WITHOUT MENTIONING IN THE PO/CONTRACT BASED ON YOUR ACCEPTANCE AND OFFER SUBMITTED.	
40	**IMPORTANT INSTRUCTION:** I.VENDORS ARE REQUESTED TO QUOTE THEIR RATE WITH DESCRIPTION MENTIONED IN THE ENQUIRY CONSIDERING ALL TECHNICAL TERMS & CONDITIONS OF THE ENQUIRY. ALSO RATES QUOTED SHOULD BE EXACLTY AS PER SL. NO. OF HARD COPY OF THE ENQUIRY (IF ENQUIRY HAS BEEN FLOATED THROUGH CONVENTIONAL MODE) OR AS PER SL. NO. APPEARING IN THE e-Procurement PORTAL (IF ENQUIRY HAS BEEN FLOATED THROUGH e-Procurement) ONLY. IT MUST BE FOLLOWED UP TO AVOID CONFUSION AT LATER STAGES. ALSO RATES TO BE SUBMITTED BOTH IN NUMERICS AS WELL AS IN WORD. IN CASE OF DISCREPENCY, RATES SUBMITTED IN WORDS SHALL BE CONSIDERED FOR FURTHER PROCESSING. II.DOCUMENTS SUBMITTED WITH THE OFFER SHOULD BE SIGNED AND STAMPED IN EACH PAGE BY AUTHORIZED REPRESENTATIVE OF THE BIDDER. II.IN CASE OF PDI, VENDOR SHALL RAISE ONLINE INSPECTION CALL IN ONLINE INSPECTION PORTAL/INTIMATE BHEL IN WRITTIING (WHERE INSPECTION IS IN BHEL HERP SCOPE) AT LEAST 01 WEEK IN ADVANCE OR AS MUTUALLY AGREED PERIOD ABOUT THE DATE AND PLACE AT WHICH GOODS WILL BE READY FOR INSPECTION. IV.PURCHASER OR HIS AUTHORIZED REPRESENTATIVE SHALL BE ENTITLED TO CARRY OUT SURVEILLANCE INSPECTION OF MATERIAL AND WORKMANSHIP AT SELLER'S PREMISES OR AT HIS SUB-CONTRACTOR'S PREMISES AT ALL REASONABLE TIMES DURING EXECUTION OF THE CONTRACT. SUCH INSPECTION, EXAMINATION AND TESTING, IF MADE, SHALL NOT ABSOLVE THE SELLER FROM HIS OBLIGATIONS UNDER THE CONTRACT. V.SUCH PRE-DISPATCH INSPECTION, EXAMINATION AND TESTING, IF MADE, AT VENDOR'S WORKS SHALL NOT ABSOLVE THE SELLER FROM HIS OBLIGATIONS TO MANUFACTURE/MACHINING THE GOODS UNDER THE CONTRACT. IF DEFCETS ARE FOUND AT LATER STAGE, IT IS THE SOLE RESPONSIBILITY OF THE VENDOR TO REPLACE/RECTIFY THE SAME.	
41	**IMPORTANT CLAUSE FOR GST**: INPUT TAX CREDIT OF GST CAN BE AVAILED BY BHEL ONLY WHEN THE MATERIAL HAS BEEN PHYSICALLY RECEIVED AND GST INVOICE IS IN POSSESSION OF BHEL. THEREFORE, SUPPLIERS SHOULD ENSURE THE FOLLOWING IN RESPECT OF POS ISSUED BY BHEL: I. GST INVOICE SHOULD CONTAIN ADDRESS, GST NO. AND PAN NO. OF BHEL AS WELL AS OF SUPPLIER. APPLICABLE HSN CODE OF THE MATERIAL SHOULD BE INDICATED IN THE GST INVOICE. II. FIVE COPIES OF GST INVOICE AND LORRY RECEIPT MAY BE DESPATCHED ALONGWITH SHIPMENT OF THE GOODS IN ORDER TO AVOID ANY DELAY IN AVAILING INPUT CREDIT BY BHEL. III. DECLARE SUCH INVOICE IN HIS GSTR-1 RETURN FOR THE MONTH OF DESPATCH OF MATERIAL. IV. PAYMENT OF GST TO STATUTORY AUTHORITIES WITHIN PRESCRIBED TIME. V. IN CASE OF DISCREPANCY IN THE DATA UPLOADED BY THE BIDDER IN THE GSTN PORTAL VIS-A-VIS THE TAX INVOICE OR IN CASE OF ANY SHORTAGES OR REJECTION IN THE SUPPLY, THEN BHEL WILL NOT BE ABLE TO AVAIL THE TAX CREDIT. BIDDER HAS TO RECTIFY THE DATA DISCREPANCY IN THE GSTN PORTAL OR ISSUE CREDIT NOTE OR DEBIT NOTE (DETAILS ALSO TO BE UPLOADED IN GSTN PORTAL) FOR THE SHORTAGES OR REJECTIONS IN THE SUPPLIES OR ADDITIONAL CLAIMS FOR PROCESSING OF SUCH INVOICES. VI. GST TDS DEDUCTED AS PER GST ACT, IS UPLOADED IN GSTN PORTAL ALONG GSTR7. BIDDERS CAN DIRECTLY DOWNLOAD THE GST TDS CERTIFICATE FROM THE GSTN PORTAL. IN CASE GST CREDIT IS DELAYED /DENIED TO BHEL DUE TO NON OR DELAYED RECEIPT OF GOODS AND OR TAX INVOICE OR EXPIRY OF TIMELINE PRESCRIBED IN GST LAW FOR AVAILING SUCH ITC OR ANY OTHER REASON NOT ATTRIBUTABLE TO BHEL, GST AMOUNT SHALL BE RECOVERABLE FROM VENDOR ALONG WITH INTEREST /PENALTY LEVIABLE ON BHEL. IN CASE SUPPLIERS DELAYS DECLARING SUCH INVOICE IN HIS RETURN AND GST CREDIT AVAILED BY BHEL IS DENIED OR REVERSED SUBSEQUENTLY AS PER GST LAW, GST AMOUNT PAID BY BHEL TOWARDS SUCH ITC REVERSAL SHALL BE RECOVERABLE FROM SUPPLIER ALONGWITH INTEREST LEVIED/LEVIABLE ON BHEL. IN CASE OF RAISING ANY SUPPLEMENTARY TAX INVOICE (DEBIT/ CREDIT NOTE), THE SUPPLIER SHALL ISSUE THE SAME CONTAINING ALL THE DETAILS AS REFERRED TO IN SECTION 34 READ WITH SECTION 31 OF GST ACT & RULES REFERRED THERE UNDER .	
42	**STATUTORY VARIATION CLAUSE :** ANY INCREASE IN THE RATE OF GST SHALL BE PAYABLE ONLY FOR DELIVERIES COMPLETED WITHIN THE SCHEDULED DELIVERY PERIOD, IN OTHER WORDS INCREASE IN THE RATE OF GST SHALL NOT BE PAYABLE FOR VALUE OF CONSIGNMENT DELIVERED AFTER THE SCHEDULED PURCHASE ORDER DELIVERY PERIOD.2.NEW TAXES AND DUTIES , IF IMPOSED SUBSEQUENT TO DUE DATE OF OFFER SUBMISSION, BY STATUTORY AUTHORITY DURING CONTRACT PERIOD (INCLUDING EXTENSION IF THE SAME IS NOT ATTRIBUTABLE TO BIDDER) SHALL BE REIMBURSED BY BHEL ON PRODUCTION OF RELEVANT SUPPORTING DOCUMENTS TO THE SATISFACTION OF BHEL . HOWEVER, BIDDER SHALL TAKE PRIOR APPROVAL OF BHEL BEFORE DEPOSITING NEW TAXES AND DUTIES.	
43	**IMPORTANT INSTRUCTION FOR MSEs SUPPLIERS:** I. "MSE SUPPLIERS CAN AVAIL THE INTENDED BENEFITS ONLY IF THEY SUBMIT ALONG WITH OFFER, ATTESTED COPIES OF EITHER EM-II CERTIFICATE HAVING DEEMED VALIDITY (FIVE YEARS FROM THE DATE OF ISSUE OF ACKNOWLEDGEMENT IN EM-II) OR VALID NSIC CERTIFICATE OR EM-II CERTIFICATE ALONG WITH CA CERTIFICATE (FORMAT ENCLOSED AS PER ANNEXURE-1 WHERE DEEMED VALIDITY OF EM-II CERTIFICATE OF FIVE YEARS HAS EXPIRED) APPLICABLE FOR THE RELEVANT F/Y (LATEST AUDITED).DATE TO BE RECKONED FOR DETERMINING THE DEEMED VALIDITY WILL BE THE DATE OF BID OPENING (PART -1 IN CASE OF TWO PART BID). NON SUBMISSION OF SUCH DOCUMENTS WILL LEAD TO CONSIDERATION OF THEIR BID AT PAR WITH OTHER BIDDERS. NO BENEFIT SHALL BE APPLICABLE FOR THIS ENQUIRY IF ANY DEFICIENCY IN THE ABOVE REQUIRED DOCUMENTS ARE NOT SUBMITTED BEFORE PRICE BID OPENING. IF THE TENDER IS TO BE SUBMITTED THROUGH e-procurement PORTAL, THEN THE ABOVE REQUIRED DOCUMENTS ARE TO BE UPLOADED ON THE PORTAL. DOCUMENTS SHOULD BE NOTARIZED OR ATTESTED BY A GAZETTED OFFICE. II.IN CASE OF ANY CHANGE IN THE MSE STATUS OF THE BIDDER, IT SHALL BE RESPONSIBILITY OF THE BIDDER TO NOTIFY THE CHANGE AS A PART OF THE BID DOCUMENT. IF AT A LATER DATE IT COMES TO NOTICE OF BHEL, THAT THE CHANGE IN THE STATUS HAS NOT BEEN INTIMATED BY THE BIDDER AND THE ORDER IS OBTAINED UNDER THE PREMISE OF AN MSE, THEN BHEL WOULD CANCEL THE PENDING ORDER AGAINST THIS TENDER AND TAKE NECESSARY ACTION SUSPENSION OF THE BUSSINESS DEALING WITH THE BIDDER AS PER PROCUREMENT POLICY OF BHEL. III.25 % OF THE TENDERED QUANTITY IS EARMARKED FOR MSE SUPPLIERS IN THIS TENDER. IV.OUT OF THIS 25% TENDERED QUANTITY RESERVED FOR MSE SUPPLIERS, 6.25% SHALL BE EARMARKED FOR PROCUREMENT FROM MSEs OWNED BY SC/ST ENTREPRENEURS. V.OUT OF THIS 25% TENDERED QUANTITY RESERVED FOR MSE SUPPLIERS, 3% SHALL BE EARMARKED FOR PROCUREMENT FROM MSEs OWNED BY WOMEN. VI.IN CASE MSE VENDOR PARTICIPATING IN THE TENDER QUOTES WITHIN THE PRICE BAND OF "L1+15%", THEY WILL BE ALLOWED TO SUPPLY THE 25% PORTION OF THE REQUIREMENT SUBJECT TO ACCEPTANCE OF L1 PRICE (ON LANDED COST BASIS) BY MSE VENDOR. IN CASE OF MORE THAN ONE SUCH MSE VENDOR WITHIN THE "L1+15% PRICE BAND" THE SUPPLY SHALL BE SHARED PROPORTIONATELY (TO 25% TENDERED QUANTITY). VII.IF THE L1 VENDOR HAPPENS TO BE A MSE VENDOR AGAINST ANY ITEM CODE, THEN 100% OF THE TENDERED QTY (FOR RESPECITVE ITEM CODE) SHALL BE PROPOSED TO ORDER ON THE L1 (MSE) VENDOR, EVEN THOUGH THERE MAY BE OTHER MSE VENDORS WITHIN THE "L1+15% PRICE BAND". VIII.IN CASE AFTER OPENING OF PRICE BID, IT IS SEEN THAT NO MSE HAS BECOME L1, THEN DEPENDING ON THE NATURE OF THE ITEM, IF IT IS NOT POSSIBLE TO SPLIT THE TENDERED ITEMS/QUANTITIES ON ACCOUNT OF REASONS LIKE CUSTOMER CONTRACT REQUIREMENTS OF SUPPLYING ONE MAKE FOR A GIVEN PROJECT OR TECHNICAL REASONS LIKE TENDERED ITEMS BEING A SYSTEM etc. THEN BHEL WOULD NOT COUNTER OFFER THE L1 PRICES EVEN THOUGH THERE MAY BE MSE BIDDERS WITHIN THE "L1+15% PRICE BAND" OF L1.	
44	THE **STARTUPS** AS DEFINED IN THE GAZETTE OF INDIA NOTIFICATION NO.: G.S.R. 127 (E) DATED 19/02/2019 WILL BE EXEMPTED FROM FULFILLING THE CRITERIA, IF MENTIONED, IN THE PQR (PRE-QUALIFYING REQUIREMENT) REGARDING PRIOR TURNOVER AND PRIOR EXPERIENCE. HOWEVER, THERE MAY BE CIRCUMSTANCES (LIKE PROCUREMENTS OF ITEMS RELATED TO PUBLIC SAFETY, HEALTH, CRITICAL SECURITY OPERATIONS AND EQUIPMENTS ETC.) WHERE BHEL MAY PREFER THE VENDORS TO HAVE PRIOR EXPERIENCE RATHER THAN GIVING ORDER TO NEW ENTITIES. FOR SUCH PROCUREMENTS, BHEL MAY NOT RELAX THE CRITERIA OF PRIOR EXPERIENCE/TURNOVER FOR THE STARTUPS.	
45	**PURCHASE PREFERENCE FOR INDIAN VENDORS:** FOR THIS PROCUREMENT, THE LOCAL CONTENT TO CATEGORIZE A SUPPLIER AS A CLASS I LOCAL SUPPLIER / CLASS II LOCAL SUPPLIER /NON LOCAL – SUPPLIER AND PURCHASE PREFERENCE TO CLASS I LOCAL SUPPLIER, IS AS DEFINED IN PUBLIC PROCUREMENT (PREFERNCE TO MAKE IN INDIA), ORDER	

	2017 DATED 04.06.2020 ISSUED BY DPIIT. IN CASE OF SUBSEQUENT ORDERS ISSUED BY THE NODAL MINISTRY, CHANGING THE DEFINITION OF LOCAL CONTENT FOR THE ITEMS OF THE NIT, THE SAME SHALL BE APPLICABLE EVEN IF ISSUED AFTER ISSUE OF THIS NIT, BUT BEFORE OPENING OF PART –II BIDS AGAINST THIS NIT. **MODEL CLAUSE FOR TENDER.** I. ANY BIDDER FROM A COUNTRY WHICH SHARES A LAND BORDER WITH INDIA WILL BE ELIGIBLE TO BID IN THIS TENDER ONLY IF THE BIDDER IS REGISTERED WITH THE COMPETENT AUTHORITY. II. "BIDDER" (INCLUDING THE TERM 'TENDERER', 'CONSULTANT' OR 'SERVICE PROVIDER' IN CERTAIN CONTEXTS) MEANS ANY PERSON OR FIRM OR COMPANY, INCLUDING ANY MEMBER OF A CONSORTIUM OR JOINT VENTURE (THAT IS AN ASSOCIATION OF SEVERAL PERSONS, OR FIRMS OR COMPANIES), EVERY ARTIFICIAL JURIDICAL PERSON NOT FALLING IN ANY OF THE DESCRIPTIONS OF BIDDERS STATED HEREINBEFORE, INCLUDING ANY AGENCY BRANCH OR OFFICE CONTROLLED BY SUCH PERSON, PARTICIPATING IN A PROCUREMENT PROCESS. III. "BIDDER FROM A COUNTRY WHICH SHARES A LAND BORDER WITH INDIA" FOR THE PURPOSE OF THIS ORDER MEANS: - a) AN ENTITY INCORPORATED, ESTABLISHED OR REGISTERED IN SUCH A COUNTRY: OR b) A SUBSIDIARY OF AN ENTITY INCORPORATED, ESTABLISHED OR REGISTERED IN SUCH A COUNTRY; OR c) AN ENTITY SUBSTANTIALLY CONTROLLED THROUGH ENTITIES INCORPORATED, ESTABLISHED OR REGISTERED IN SUCH A COUNTRY; OR d) AN ENTITY WHOSE BENEFICIAL OWNER IS SITUATED IN SUCH A COUNTRY; OR e) AN INDIAN (OR OTHER) AGENT OF SUCH AN ENTITY; OR f) A NATURAL PERSON WHO IS A CITIZEN OF SUCH A COUNTRY; OR g) A CONSORTIUM OR JOINT VENTURE WHERE ANY MEMBER OF THE CONSORTIUM OR JOINT VENTURE FALLS UNDER ANY OF THE ABOVE IV. THE BENEFICIAL OWNER FOR THE PURPOSE OF (III) ABOVE WILL BE AS UNDER: 1. IN CASE OF A COMPANY OR LIMITED LIABILITY PARTNERSHIP, THE BENEFICIAL OWNER IS THE NATURAL PERSON (S) WHO, WHETHER ACTING ALONE OR TOGETHER, OR THROUGH ONE OR MORE JURIDICAL PERSON, HAS A CONTROLLING OWNERSHIP INTEREST OR WHO EXERCISES CONTROL THROUGH OTHER MEANS. EXPLANATION – a. "CONTROLLING OWNERSHIP INTEREST" MEANS OWNERSHIP OF OR ENTITLEMENT TO MORE THAN TWENTY-FIVE PER CENT. OF SHARES OR CAPITAL OR PROFITS OF THE COMPANY b. "CONTROL" SHALL INCLUDE THE RIGHT TO APPOINT MAJORITY OF THE DIRECTORS OR TO CONTROL THE MANAGEMENT OR POLICY DECISIONS INCLUDING BY VIRTUE OF THEIR SHAREHOLDING OR MANAGEMENT RIGHTS OR SHAREHOLDER'S AGREEMENTS OF VOTING AGREEMENTS; 2. IN CASE OF A PARTNERSHIP FIRM, THE BENEFICIAL OWNER IS THE NATURAL PERSON (S) WHO, WHETHER ACTING ALONE OR TOGETHER, OR THROUGH ONE OR MORE JURIDICAL OF CAPITAL OR PROFITS OF THE PARTNERSHIP; 3. IN CASE OF AN UNINCORPORATED ASSOCIATION OR BODY OF INDIVIDUALS, THE BENEFICIAL OWNER IS THE NATURAL PERSON (S), WHO, WHETHER ACTING ALONE OR TOGETHER, OR THROUGH ONE OR MORE JURIDICAL PERSON, HAS OWNERSHIP OF OR ENTITLEMENT TO MORE THAN FIFTEEN PERCENT OF THE PROPERTY OF CAPITAL OF PROFITS OF SUCH ASSOCIATION OR BODY OF INDIVIDUALS; 4. WHERE NO NATURAL PERSON IS IDENTIFIED UNDER (1) OR (2) OR (3) ABOVE, THE BENEFICIAL OWNER IS THE RELEVANT NATURAL PERSON WHO HOLDS THE POSITION OF SENIOR MANAGING OFFICIAL; 5. IN CASE OF TRUST, THE IDENTIFICATION OF BENEFICIAL OWNER (S) SHALL INCLUDE IDENTIFICATION OF THE AUTHOR OF THE TRUST, THE TRUSTEE, THE BENEFICIARIES WITH FIFTEEN PERCENT OR MORE INTEREST IN THE TRUST AND ANY OTHER NATURAL PERSON EXERCISING ULTIMATE EFFECTIVE CONTROL OVER THE TRUST THROUGH A CHAIN OF CONTROL OR OWNERSHIP. V. AN AGENT IS A PERSON EMPLOYED TO DO ANY ACT FOR ANOTHER, OR TO REPRESENT ANOTHER IN DEALINGS WITH THIRD PERSON. **CERTIFICATE:** IN ORDER TO AVAIL THE BENEFITS, VENDORS TO SUBMIT (ALONG WITH OFFER) THE SELF-CERTIFICATION THAT THE ITEM OFFERED MEETS THE CONTENT REQUIREMENT FOR CLASS-I/ CLASS-II LOCAL SUPPLIER AS THE CASE MAY BE, INDICATING THE PERCENTAGE OF LOCAL CONTENT. AND SHALL GIVE DETAILS OF LOCATION AT WHICH THE LOCAL VALUE ADDITION IS MADE (refer attached Make in India (Model Certificate no I).	
46	**FORCE MAJEURE** : NOTWITHSTANDING ANYTHING CONTAINED IN THE CONTRACT, NEITHER THE VENDOR NOR THE BHEL SHALL BE HELD RESPONSIBLE FOR TOTAL OR PARTIAL NON-EXECUTION OF ANY OF THE CONTRACTUAL OBLIGATIONS, SHOULD THE OBLIGATION BECOME UNREASONABLY ONEROUS OR IMPOSSIBLE DUE TO OCCURRENCE OF A 'FORCE MAJEURE' WHICH DIRECTLY AFFECTS THE OBLIGATIONS TO BE PERFORMED BY THE BHEL OR THE VENDOR ; SUCH EVENTS INCLUDE WAR, MILITARY OPERATIONS OF ANY NATURE, BLOCKAGES, REVOLUTIONS, INSURRECTIONS, RIOTS, CIVIL COMMOTIONS, INSURGENCY, SABOTAGE, ACTS OF PUBLIC ENEMY, FIRES, EXPLOSION, EPIDEMICS, QUARANTINE RESTRICTIONS, FLOODS, EARTHQUAKE, OR ACTS OF GOD, RESTRICTIONS BY GOVT. AUTHORITIES; OVER WHICH THE VENDOR OR THE BHEL HAS NO CONTROL. THE PARTY CLAIMING TO BE AFFECTED BY FORCE MAJEURE SHALL NOTIFY THE OTHER PARTY IN WRITING WITHOUT DELAY, WITHIN TWO WEEKS ON THE INTERVENTION AND ON THE CESSATION OF SUCH CIRCUMSTANCE. EXTENSION OF TIME SOUGHT BY THE VENDOR ALONG WITH SUPPORTING EVIDENCE AND SO GRANTED BY THE BHEL FOR THE SUPPLY/ WORK AFFECTED, IF ANY, SHALL NOT BE CONSTRUED AS WAIVER IN RESPECT OF REMAINING DELIVERIES. RESCHEDULING OF DELIVERIES ON ACCOUNT OF FORCE MAJEURE CONDITIONS, IF SO AGREED BY THE BHEL, WILL NOT ENTAIL THE VENDOR TO CLAIM ANY INCREASE IN THE PRICE ON WHATSOEVER ACCOUNT. NOTWITHSTANDING ABOVE PROVISIONS, BHEL SHALL RESERVE THE RIGHT TO CANCEL THE ORDER/ CONTRACT, WHOLLY OR PARTLY, IN ORDER TO MEET THE OVERALL PROJECT SCHEDULE AND MAKE ALTERNATIVE ARRANGEMENTS. IF DEEMED NECESSARY, BHEL MAY TAKEOVER PARTLY PROCESSED MATERIAL AT A MUTUALLY AGREED PRICE.	
47	**FRAUD PREVENTION POLICY :** THE BIDDER ALONG WITH ITS ASSOCIATE/ COLLABORATORS/ SUB-CONTRACTORS/ SUB-VENDORS/ CONSULTANTS/ SERVICE PROVIDERS SHALL STRICTLY ADHERE TO BHEL FRAUD PREVENTION POLICY DISPLAYED ON BHEL WEBSITE WWW.BHEL.COM AND SHALL IMMEDIATELY BRING TO THE NOTICE OF BHEL MANAGEMENT ABOUT ANY FRAUD OR SUSPECTED FRAUD AS SOON AS IT COMES TO THEIR NOTICE.	
48	**SHORT SHIPMENTS/ WARRANTY/GUARANTEE REPLACEMENTS**: IN CASE OF ANY SHORT SHIPMENT DURING INITIAL SUPPLY WHICH IS SUBSEQUENTLY DISPATCHED BY THE VENDOR OR ANY GUARANTEE / WARRANTY REPLACEMENTS SHALL BE DISPATCHED ON "FOR-BHEL STORES/DESIGNATED DESTINATION" BASIS FOR INDIGENOUS ITEMS. TAXES, IF ANY PAID BY INDIGENOUS VENDOR FOR GUARANTEE /WARRANTEE REPLACEMENT, REPAIR ACTIVITY EXCLUDING SHORT SUPPLY SHALL BE TO VENDOR'S ACCOUNT ONLY. THE VENDOR HAS TO RAISE A CREDIT NOTE FOR SHORT SUPPLIED QUANTITY AS PER GST PROVISIONS.	
49	**E WAY BILL**: THE SUPPLIER HAS TO ARRANGE FOR E WAY BILL AS APPLICABLE FOR ANY MOVEMENT OF GOODS ALONG WITH OTHER PRESCRIBED DOCUMENTS AS PER GST LAW. THE SUPPLIER HAS ALSO TO COMPLY WITH ANY AMENDMENT AS PRESCRIBED FROM TIME TO TIME UNDER E WAY BILL RULE. ANY FINANCIAL IMPLICATION ARISES ON BHEL DUE TO NONCOMPLIANCE OF E WAY BILL RULE WILL BE PASSED ON TO THE SUPPLIER.	
50	THE BIDDER DECLARES THAT THEY WILL NOT ENTER INTO ANY ILLEGAL OR UNDICLOSED AGREEMENT OR UNDERSTANDING, WHETHER FORMAL OR INFORMAL WITH OTHER BIDDER (S). THIS APPLIES IN PARTICULAR TO PRICES, SPECIFICATIONS, CERTIFICATIONS, SUBSIDIARY CONTRACTS, SUBMISSION OR NON- SUBMISSION OF BIDS OR ANY OTHER ACTIONS TO RESTRICT COMPETITIVENES OR TO INTRODUE CARTELIZATION IN THE BIDDING PROCESS. IN CASE, THE BIDDER IS FOUND HAVING INDULGED IN ABOVE ACTIVITIES, SUITABLE ACTION SHALL BE TAKEN BY BHEL AS PER EXTANT POLICIES / GUIDELINES.	
51	THE BIDDER SHALL REGISTER THEMSELVES ON GEM PORTAL AND SHALL QUOTE THEIR GEM SELLER ID IN THEIR OFFER. GEM SELLER ID IS MANDATORY FOR PLACEMENT OF PURCHASE ORDER EXCEPT IN CASES WHERE FREE ISSUE MATERIAL IS TO BE ISSUED BY BHEL .	
52	**REJECTION/REPLACEMENT:** THE SELLER SHALL ARRANGE REPLACEMENT / REPAIR UNDER ITS OBLIGATION UNDER THE CONTRACT. SELLER SHALL BE GIVEN GROUND RENT FREE PERIOD OF 90 DAYS FROM THE DATE OF REJECTION TO LIFT REJECTED MATERIAL. BEYOND 90 DAYS, A GROUND RENT OF 0.25% OF VALUE OF REJECTED MATERIAL PER WEEK WILL BE LEVIED FOR A MAXIMUM PERIOD OF 4 WEEKS. BEYOND THIS PERIOD SUPPLIER FORFEITS THEIR RIGHT TO THE MATERIALS.	
53	**CONFLICT OF INTEREST AMONG BIDDERS/AGENTS:** A BIDDER SHALL NOT HAVE CONFLICT OF INTEREST WITH OTHER BIDDERS. SUCH CONFLICT OF INTEREST CAN LEAD TO ANTI-COMPETITIVE PRACTICES TO THE DETRIMENT OF PROCURING ENTITY'S INTERESTS. THE BIDDER FOUND TO HAVE A CONFLICT OF INTEREST SHALL BE DISQUALIFIED. A BIDDER MAY BE CONSIDERED TO HAVE A CONFLICT OF INTEREST WITH ONE OR MORE PARTIES IN THIS BIDDING PROCESS, IF a) THEY HAVE CONTROLLING PARTNER (S) IN COMMON; OR b) THEY RECEIVE OR HAVE RECEIVED ANY DIRECT OR INDIRECT SUBSIDY FINANCIAL STAKE FROM ANY OF THEM; OR c) THEY HAVE THE SAME LEGAL REPRESENTATIVE/AGENT FOR PURPOSES OF THIS BID; OR d) THEY HAVE RELATIONSHIP WITH EACH OTHER, DIRECTLY OR THROUGH COMMON THIRD PARTIES, THAT PUTS THEM IN A POSITION TO HAVE ACCESS TO INFORMATION ABOUT OR INFLUENCE ON THE BID OF ANOTHER BIDDER; OR e) BIDDER PARTICIPATES IN MORE THAN ONE BID IN THIS BIDDING PROCESS. PARTICIPATION BY A BIDDER IN MORE THAN ONE BID WILL RESULT IN THE DISQUALIFICATION OF ALL BIDS IN WHICH THE PARTIES ARE INVOLVED. HOWEVER, THIS DOES NOT LIMIT THE INCLUSION OF THE COMPONENTS/ SUB-ASSEMBLY ASSEMBLIES FROM ONE BIDDING MANUFACTURER IN MORE THAN ONE BID; OR	

	f) IN CASES OF AGENTS QUOTING IN OFFSHORE PROCUREMENTS, ON BEHALF OF THEIR PRINCIPAL MANUFACTURERS, ONE AGENT CANNOT REPRESENT TWO MANUFACTURERS OR QUOTE ON THEIR BEHALF IN A PARTICULAR TENDER ENQUIRY. ONE MANUFACTURER CAN ALSO AUTHORISE ONLY ONE AGENT/DEALER. THERE CAN BE ONLY ONE BID FROM THE FOLLOWING: 1. THE PRINCIPAL MANUFACTURER DIRECTLY OR THROUGH ONE INDIAN AGENT ON HIS BEHALF; AND 2. INDIAN/FOREIGN AGENT ON BEHALF OF ONLY ONE PRINCIPAL; OR g) A BIDDER OR ANY OF ITS AFFILIATES PARTICIPATED AS A CONSULTANT IN THE PREPARATION OF THE DESIGN OR TECHNICAL SPECIFICATIONS OF THE CONTRACT THAT IS THE SUBJECT OF THE BID; OR H) IN CASE OF A HOLDING COMPANY HAVING MORE THAN ONE INDEPENDENTLY MANUFACTURING UNITS, OR MORE THAN ONE UNIT HAVING COMMON BUSINESS OWNERSHIP/MANAGEMENT, ONLY ONE UNIT SHOULD QUOTE. SIMILAR RESTRICTIONS WOULD APPLY TO CLOSELY RELATED SISTER COMPANIES. BIDDERS MUST PROACTIVELY DECLARE SUCH SISTER/ COMMON BUSINESS/ MANAGEMENT UNITS IN SAME/ SIMILAR LINE OF BUSINESS.	
54	VENDOR MUST VISIT OUR WEBSITE https://herp.bhel.com REGULARILY FOR ENQUIRY/PO/CLARIFICATIONS/FOR ANY LATEST UPDATES.	
55	MSME VENDORS CAN AVAIL BENEFITS OF PAYMENT THROUGH TREDS/RXIL.	
56	"THE OFFERS OF THE BIDDERS WHO ARE UNDER SUSPENSION AS ALSO THE OFFERS OF THE BIDDERS, WHO ENGAGE THE SERVICES OF THE FIRMS DEBARRED ACROSS BHEL, SHALL BE REJECTED. THE LIST OF FIRMS DEBARRED ACROSS BHEL IS AVAILABLE ON BHEL WEBSITE WWW.BHEL.COM. 1.0 INTEGRITY COMMITMENT, PERFORMANCE OF THE CONTRACT AND PUNITIVE ACTION THEREOF: 1.1. COMMITMENT BY BHEL: BHEL COMMITS TO TAKE ALL MEASURES NECESSARY TO PREVENT CORRUPTION IN CONNECTION WITH THE TENDER PROCESS AND EXECUTION OF THE CONTRACT. BHEL WILL DURING THE TENDER PROCESS TREAT ALL BIDDER(S) IN A TRANSPARENT AND FAIR MANNER, AND WITH EQUITY. 1.2. COMMITMENT BY BIDDER/ SUPPLIER/ CONTRACTOR: 1.2.1. THE BIDDER/ SUPPLIER/ CONTRACTOR COMMIT TO TAKE ALL MEASURES TO PREVENT CORRUPTION AND WILL NOT DIRECTLY OR INDIRECTLY INFLUENCE ANY DECISION OR BENEFIT WHICH HE IS NOT LEGALLY ENTITLED TO NOR WILL ACT OR OMIT IN ANY MANNER WHICH TANTAMOUNT TO AN OFFENCE PUNISHABLE UNDER ANY PROVISION OF THE INDIAN PENAL CODE, 1860 OR ANY OTHER LAW IN FORCE IN INDIA. 1.2.2. THE BIDDER/ SUPPLIER/ CONTRACTOR WILL, WHEN PRESENTING HIS BID, DISCLOSE ANY AND ALL PAYMENTS HE HAS MADE, AND IS COMMITTED TO OR INTENDS TO MAKE TO AGENTS, BROKERS OR ANY OTHER INTERMEDIARIES IN CONNECTION WITH THE AWARD OF THE CONTRACT AND SHALL ADHERE TO RELEVANT GUIDELINES ISSUED FROM TIME TO TIME BY GOVT. OF INDIA/ BHEL. 1.2.3. THE BIDDER/ SUPPLIER/ CONTRACTOR WILL PERFORM/ EXECUTE THE CONTRACT AS PER THE CONTRACT TERMS & CONDITIONS AND WILL NOT DEFAULT WITHOUT ANY REASONABLE CAUSE, WHICH CAUSES LOSS OF BUSINESS/ MONEY/ REPUTATION, TO BHEL. IF ANY BIDDER/ SUPPLIER/ CONTRACTOR DURING PRE-TENDERING/ TENDERING/ POST TENDERING/ AWARD/ EXECUTION/ POST-EXECUTION STAGE INDULGES IN MALPRACTICES, CHEATING, BRIBERY, FRAUD OR AND OTHER MISCONDUCT OR FORMATION OF CARTEL SO AS TO INFLUENCE THE BIDDING PROCESS OR INFLUENCE THE PRICE OR ACTS OR OMITS IN ANY MANNER WHICH TANTAMOUNT TO AN OFFENCE PUNISHABLE UNDER ANY PROVISION OF THE INDIAN PENAL CODE, 1860 OR ANY OTHER LAW IN FORCE IN INDIA, THEN, ACTION MAY BE TAKEN AGAINST SUCH BIDDER/ SUPPLIER/ CONTRACTOR AS PER EXTANT GUIDELINES OF THE COMPANY AVAILABLE ON WWW. BHEL.COM AND/OR UNDER APPLICABLE LEGAL PROVISIONS".	
57	**BID SECURITY OR EARNEST MONEY DEPOSIT (EMD):** TO SAFE GUARD AGAINST A BIDDER'S WITHDRAWING OR ALTERING ITS/ HIS BID DURING THE BID VALIDITY PERIOD, BID SECURITY [ALSO KNOWN AS EARNEST MONEY DEPOSIT (EMD)] SHALL BE OBTAINED FROM THE BIDDERS ALONG WITH THEIR BIDS (EXCEPT MICRO AND SMALL ENTERPRISES (MSES) OR STARTUPS AS RECOGNIZED BY DEPARTMENT FOR PROMOTION OF INDUSTRY AND INTERNAL TRADE (DPIIT)). THE AMOUNT OF EMD SHALL BE AS MENTIONED IN ENQUIRY. 1**. MODES OF DEPOSIT** A) THE EMD MAY BE ACCEPTED ONLY IN THE FOLLOWING FORMS AND THE SAME MUST BE SUBMITTED BEFORE TENDER OPENING: (I) ELECTRONIC FUND TRANSFER CREDITED IN BHEL ACCOUNT. (II) BANKER'S CHEQUE/ PAY ORDER/ DEMAND DRAFT, IN FAVOUR OF BHEL. (III) FIXED DEPOSIT RECEIPT (FDR).(IN THE NAME OF " BIDDER'S NAME A/C BHEL'') (IV) BANK GUARANTEE FROM ANY OF THE SCHEDULED BANKS. (V) INSURANCE SURETY BONDS. B) IN CASE THE EMD IS MORE THAN RUPEES TWO LAKH AND IN CASE OF FOREIGN BIDDERS, IT MAY BE IN THE FORM OF A BANK GUARANTEE (IN EQUIVALENT FOREIGN EXCHANGE AMOUNT, IN CASE OF FOREIGN BIDDERS) ISSUED/ CONFIRMED FROM ANY OF THE SCHEDULED COMMERCIAL BANK IN INDIA IN AN ACCEPTABLE FORM. THE EMD SHALL REMAIN VALID FOR A PERIOD OF 45 (FORTY-FIVE) DAYS BEYOND THE FINAL BID VALIDITY PERIOD. **2. FORFEITURE OF EMD** I) A BIDDER'S EMD WILL BE FORFEITED IF THE BIDDER WITHDRAWS OR AMENDS ITS/HIS TENDER OR IMPAIRS OR DEROGATES FROM THE TENDER IN ANY RESPECT WITHIN THE PERIOD OF VALIDITY OF THE TENDER OR IF THE SUCCESSFUL BIDDER FAILS TO FURNISH THE REQUIRED PERFORMANCE SECURITY WITHIN THE SPECIFIED PERIOD MENTIONED IN THE TENDER. (II) EMD BY THE TENDERER SHALL BE WITHHELD IN CASE ANY ACTION ON THE BIDDER IS ENVISAGED UNDER THE PROVISIONS OF EXTANT "GUIDELINES ON SUSPENSION OF BUSINESS DEALINGS WITH SUPPLIERS/ CONTRACTORS" AND FORFEITED/ RELEASED BASED ON THE ACTION AS DETERMINED UNDER THESE GUIDELINES. **3. RETURN OF EMD** (I) BID SECURITIES OF THE UNSUCCESSFUL BIDDERS SHALL BE RETURNED TO BIDDER AT THE EARLIEST AFTER EXPIRY OF THE FINAL BID VALIDITY PERIOD AND LATEST BY THE 30TH DAY AFTER THE AWARD OF THE CONTRACT. HOWEVER, IN CASE OF TWO PACKET OR TWO STAGE BIDDING, BID SECURITIES OF UNSUCCESSFUL BIDDERS DURING FIRST STAGE I.E. TECHNICAL EVALUATION ETC. SHALL BE RETURNED WITHIN 30 DAYS OF DECLARATION OF RESULT OF FIRST STAGE I.E. TECHNICAL EVALUATION ETC. (II) BID SECURITY SHALL BE REFUNDED TO THE SUCCESSFUL BIDDER ON CONCLUSION OF THE ORDER/ RECEIPT OF A PERFORMANCE SECURITY (IF CALLED IN THE TENDER). (III) EMD SHALL NOT CARRY ANY INTEREST.	
58	**PERFORMANCE SECURITY (PS):** TO ENSURE DUE PERFORMANCE OF THE CONTRACT, PERFORMANCE BANK GUARANTEE (PBG) OR SECURITY DEPOSIT (SD), HEREAFTER REFERRED AS PERFORMANCE SECURITY SHALL BE OBTAINED FROM THE SUCCESSFUL BIDDER AWARDED THE CONTRACT. THE PERFORMANCE SECURITY OF REQUIRED AMOUT IS TO BE SUBMITTED BY THE DATE SPECIFIED IN THE PO/CONTRACT. 1**. MODES OF DEPOSIT:** A) PERFORMANCE SECURITY MAY BE FURNISHED IN THE FOLLOWING FORMS: (I) LOCAL CHEQUES OF SCHEDULED BANKS (SUBJECT TO REALIZATION)/ PAY ORDER/ DEMAND DRAFT/ ELECTRONIC FUND TRANSFER IN FAVOUR OF BHEL. (II) BANK GUARANTEE FROM SCHEDULED BANKS / PUBLIC FINANCIAL INSTITUTIONS AS DEFINED IN THE COMPANIES ACT. THE BANK GUARANTEE FORMAT SHOULD HAVE THE APPROVAL OF BHEL. (III) FIXED DEPOSIT RECEIPT ISSUED BY SCHEDULED BANKS / PUBLIC FINANCIAL INSTITUTIONS AS DEFINED IN THE COMPANIES ACT (FDR SHOULD BE IN THE NAME OF THE **CONTRACTOR, A/C BHEL**). (IV) SECURITIES AVAILABLE FROM INDIAN POST OFFICES SUCH AS NATIONAL SAVINGS CERTIFICATES, KISAN VIKAS PATRAS ETC. (HELD IN THE NAME OF CONTRACTOR FURNISHING THE SECURITY AND DULY ENDORSED/ HYPOTHECATED/ PLEDGED, AS APPLICABLE, IN FAVOUR OF BHEL). (V) INSURANCE SURETY BOND. (NOTE: BHEL WILL NOT BE LIABLE OR RESPONSIBLE IN ANY MANNER FOR THE COLLECTION OF INTEREST OR RENEWAL OF THE DOCUMENTS OR IN ANY OTHER MATTER CONNECTED THEREWITH) B) IN CASE OF GTE TENDERS, THE PERFORMANCE SECURITY SHALL BE IN THE SAME CURRENCY AS THE CONTRACT AND MUST CONFORM TO UNIFORM RULES FOR DEMAND GUARANTEES (URDG 758) - AN INTERNATIONAL CONVENTION REGULATING INTERNATIONAL SECURITIES. (C) PERFORMANCE SECURITY IS TO BE FURNISHED WITHIN A SPECIFIED DATE (GENERALLY 14(FOURTEEN) DAYS AFTER NOTIFICATION OF THE AWARD) AND IT SHOULD REMAIN VALID FOR A PERIOD OF 60 (SIXTY) DAYS BEYOND THE DATE OF COMPLETION OF ALL CONTRACTUAL OBLIGATIONS OF THE SUPPLIER, INCLUDING WARRANTY OBLIGATIONS. 2. **FORFEITURE OF PERFORMANCE SECURITY:** THE PERFORMANCE SECURITY WILL BE FORFEITED AND CREDITED TO BHEL'S ACCOUNT IN THE EVENT OF A BREACH OF CONTRACT BY THE SUPPLIER. 3. **RETURN OF PERFORMANCE SECURITY (PS):** PS SHALL BE REFUNDED TO THE BIDDER WITHOUT INTEREST, AFTER HE DULY PERFORMS AND COMPLETES THE CONTRACT IN ALL RESPECTS BUT NOT LATER THAN 60(SIXTY) DAYS OF COMPLETION OF ALL SUCH OBLIGATIONS INCLUDING THE WARRANTY UNDER THE CONTRACT.	

	4. THE PERFORMANCE SECURITY SHALL NOT CARRY ANY INTEREST.	
59	**BREACH OF CONTRACT, REMEDIES AND TERMINATION:** IN CASE OF BREACH OF CONTRACT, WHEREVER THE VALUE OF SECURITY INSTRUMENTS LIKE PERFORMANCE BANK GUARANTEE AVAILABLE WITH BHEL AGAINST THE SAID CONTRACT IS ATLEAST 10% OF THE CONTRACT VALUE, THE SAME BE ENCASHED. IN CASE THE VALUE OF THE SECURITY INSTRUMENTS AVAILABLE IS LESS THAN 10% OF THE CONTRACT VALUE, THE BALANCE AMOUNT BE RECOVERED FROM OTHER FINANCIAL REMEDIES (I.E. AVAILABLE BILLS OF THE CONTRACTOR, RETENTION AMOUNT, ETC. WITH BHEL) OR LEGAL REMEDIES BE PURSUED. FURTHER, LEVY OF LIQUIDATED DAMAGES, DEBARMENT, TERMINATION, DE-SCOPING, SHORT-CLOSURE, ETC., SHALL BE APPLIED AS PER PROVISIONS OF THE CONTRACT.	

NOTE:

1. PLEASE FILL IN THIS FORMAT AND SEND COMPULSORILY ALONG WITH QUOTATION WITH VENDOR'S SEAL, SIGNATURE AND DATE.

SIGNATURE ALONG WITH SEAL AND DATE:

FIRST ANGLE PROJECTION

(ALL DIMENSIONS ARE IN mm)

DRG. NO. 2-61-176-00002 | SH. 01 OF 01

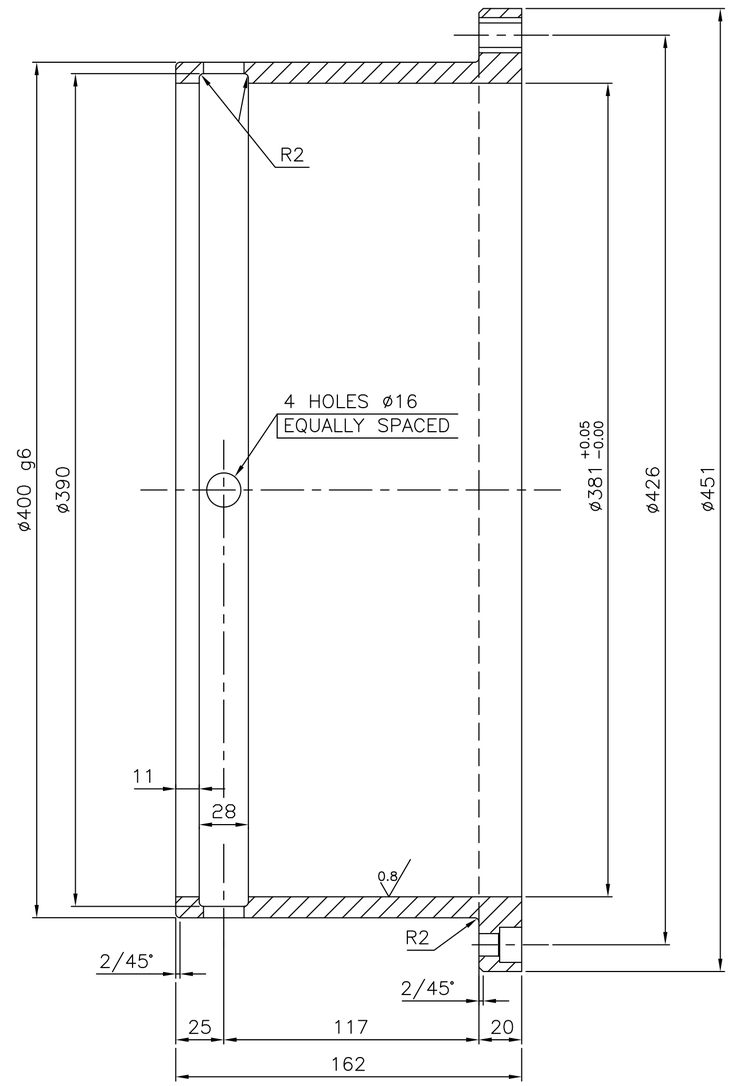

SECTION–AA

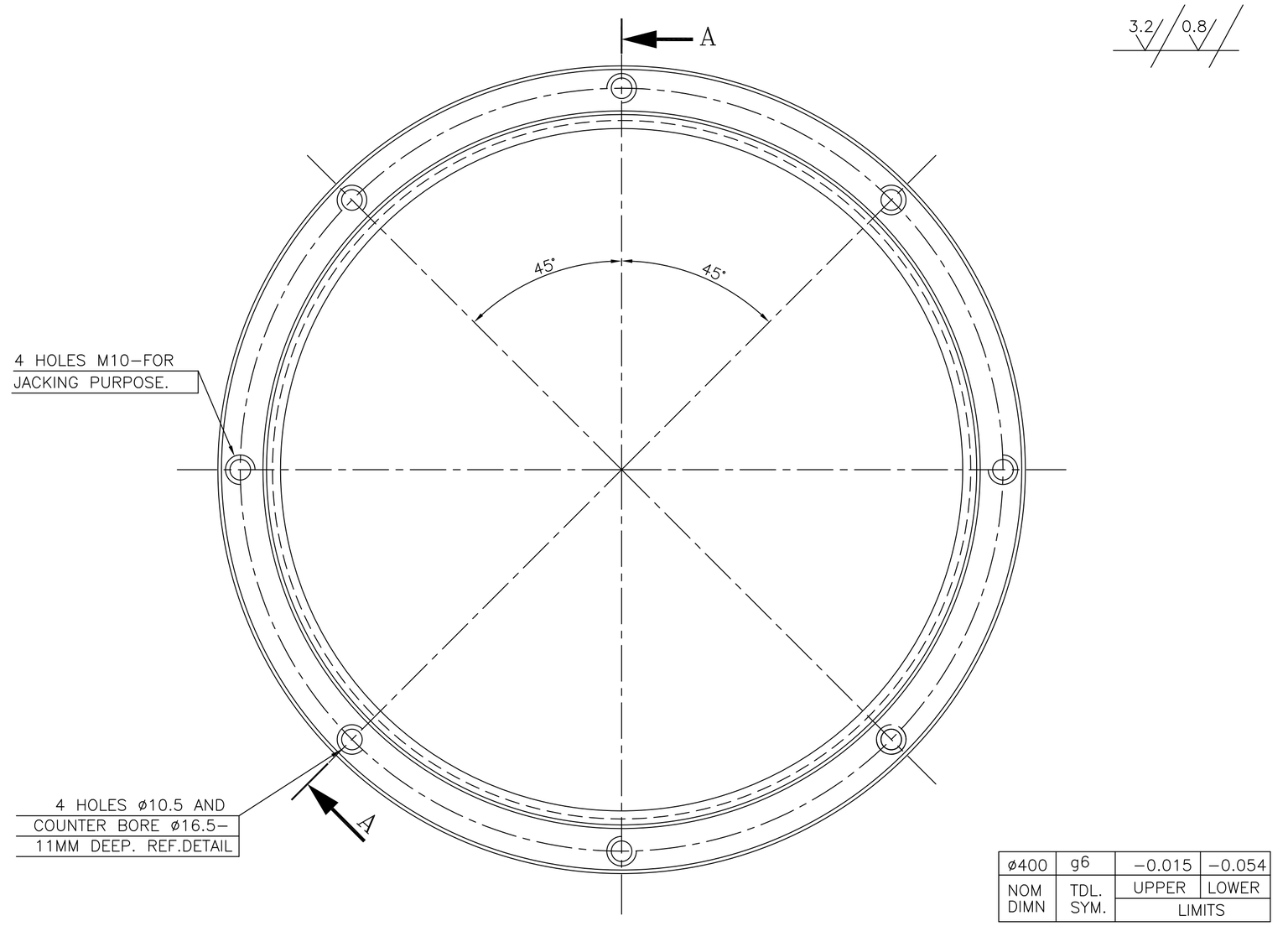

ø400	g6	−0.015	−0.054
NOM DIMN	TDL. SYM.	UPPER	LOWER
		LIMITS	

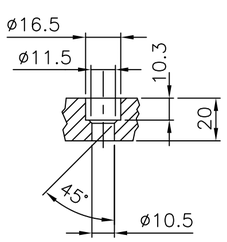

COUNTER BORE DETAIL

NOTES:–

01. MACHINE ALL SURFACES TO 3.2 UNLESS OTHERWISE SHOWN. SURFACE ROUGHNESS RATINGS SHOWN ARE MAXIMUM.

02. DEBURR ALL SHARP EDGES.

ITEM NO.	DESCRIPTION	DRAWING NO.	VAR. NO.	RAW MATERIAL SIZE OR CASTING DRG. NO. OR FORGING DRG. NO.	MATERIAL CODE	NET WT.	GROSS WT.
	CASTING	PATTERN NO. M–67–328			BA9313903016	21.0	
					AA19939		
					MATERIAL SPECN.	QUANTITY	

THE FOLLOWING CONDITIONS APPLY EXCEPT OTHERWISE STATED.

1. REF. TO HY0230261 FOR UNSPECIFIED TOLERANCES.
2. CHAMFER M/CD. SHARP EDGES 1.2 TO 1.0 AT 45°.
3. INTERNAL M/CD. CORNER RADII 1 TO 0.7
4. THE SURFACE ROUGHNESS WHERE–EVER NOT SHOWN SHALL BE TAKEN FROM THE SURFACE ROUGHNESS SHOWN OUT SIDE THE BACK SLASH GIVEN ON THE TOP MOST RIGHT CORNER OF THE DRG.

TYPE OF PRODUCT: 763 XRP BOWL MILL

NAME OF CUSTOMER/PROJECT

BHARAT HEAVY ELECTRICALS LIMITED
HYDERABAD

	NAME	SIGN.	DATE	NO.OF VAR.
DRN.	UNIC			
CHD.	NDS		07.10.97	
APPD.	S GHATGE		07.10.97	

DEPT.	UNTOL. DIMS. GR.		SCALE	WEIGHT (KG)	REF. TO ASSY DRG.	ITEM NO.	NO.OF ITEMS
PULV ENGG. CODE 446	¢/M/F		1:2	21.00	1–61–180–90027		

TITLE: OIL PUMP BUSHING

CARD CODE

DRAWING NO. 2–61–176–00002 REV. 04

SHEET NO. 01 NO OF SHEETS 01

REV.	DATE	ALTERED	APPD.
		CHD.	
04	12.5.10	CHD.	V.Kumar
03	24.02.97	CHD.	

ZONE D1: DIMENSION 28 WAS 23

ZONE: DRAWING REDRAWN BY INCORPORATING ALL PREVIOUS REV.

THE INFORMATION ON THIS DOCUMENT IS THE PROPERTY OF BHARAT HEAVY ELECTRICALS LIMITED. IT MUST NOT BE USED DIRECTLY OR INDIRECTLY IN ANY WAY DETRIMENTAL TO THE INTEREST OF THE COMPANY

COMPUTER FILE NAME 26100002.DWG | REF. DRG. NO. | SIGN. AND DATE | INVENTORY NO

GENERAL DIMENSIONAL LIMITS,FITS & TOLERANCES AS PER HY0230261

(ALL DIMENSIONS ARE IN mm)

DRG. NO. 2-61-180-00689

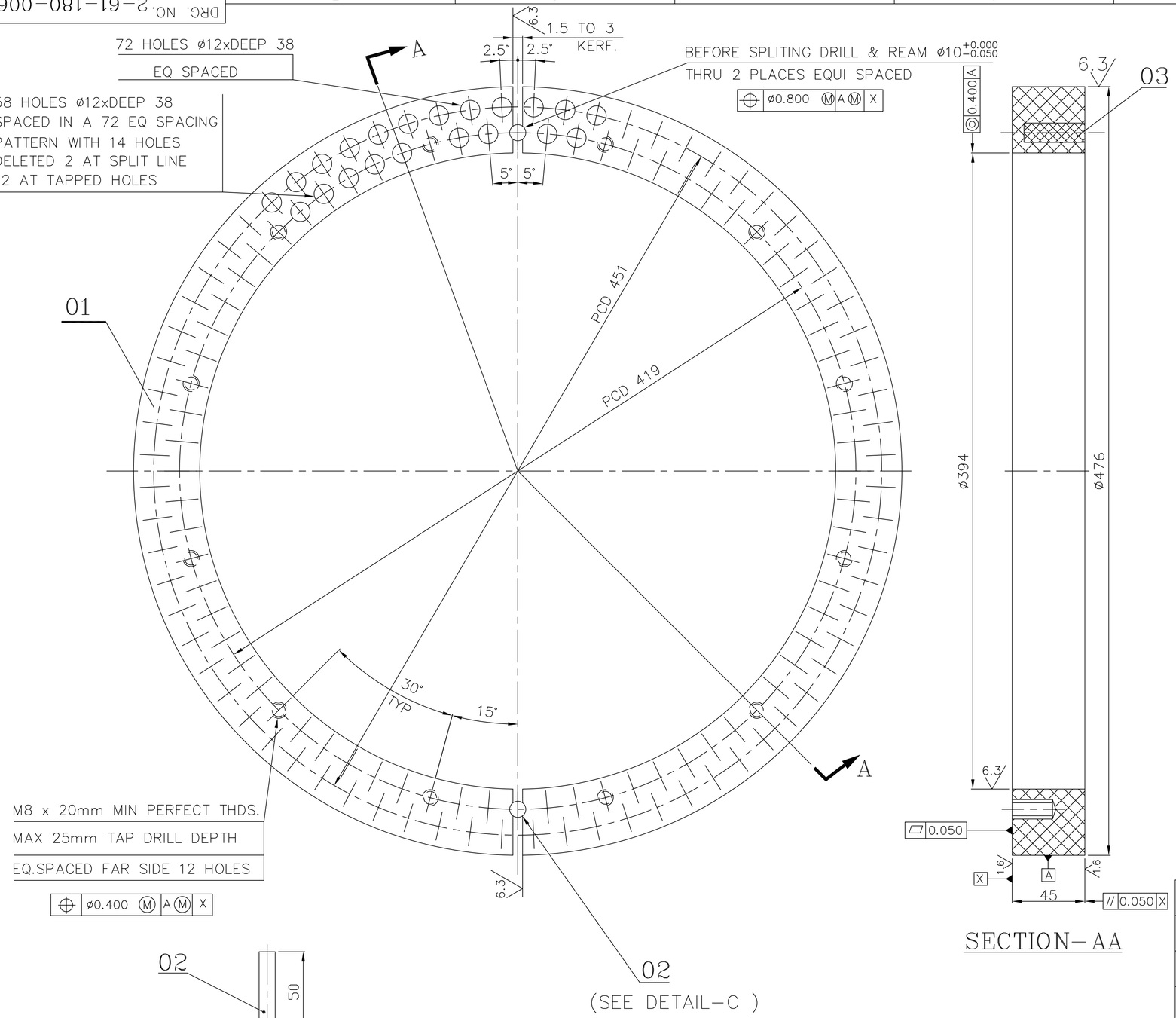

SECTION-AA

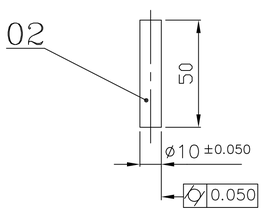

DETAIL-C

NOTES: –

CONSTRUCTION:

01. ROUGH MACHINE TO PREPARE FOR APPLICATION OF GRAPHITED EPOXY.

02. FILL EACH ø12 HOLE (130) WITH EPOXY MIXTURE ASSURING THAT NO AIR POCKETS EXIST. LEAVE A 0.5mm TO 1mm MOUND ON SEAL TOP SURFACE. BAKE PART FOR 120 TO 145 MINUTES AT 150°C TO 165°C ALLOW FOR COOLING TO ROOM TEMP BEFORE FINISH MACHINING.

MATERIAL

01. SAND CAST HIGH STRENGTH MANGANESE BRONZE PER ASTM-B584 ALLOY C86300 WITH 200-220 BRINELL (3000Kg LOAD) HARDNESS (ITEM No.01 & ITEM No.02)

02. DYLON INDUSTRIES INC EPOXY BONDED GRAPHITE GRADE Rx.(ITEM No.03)

12.5 6.3 1.6

ITEM NO.	DESCRIPTION	DRAWING NO.	MATL CODE / MATL SPECN	UNIT WT. / QTY
03	EPOXY BONDED GRAPHITE GR.RX	–	– / GRAPHITE GR.RX	1.500 / 1
02	SEAL PIN (CASTING)	–	MANG. BRONZE / ASTM B584	0.033 / 2
01	SEAL RING (CASTING)	–	MANG BRONZE / ASTM B584	16.572 / 1

REF.TO HY0230261 FOR UNSPECIFIED TOLERANCES

TYPE OF PRODUCT
OR
NAME OF CUSTOMER/PROJECT

BHARAT HEAVY ELECTRICALS LTD.
HYDERABAD

	NAME	SIGN.	DATE	NO.OF VAR.
DRN.	UNIC		96.07.20	
CHD.	NDS		97.08.26	
APPD.	S GHATGE		97.08.26	

REV.	DATE	ALTERED / CHECKED / APPROVED	DEPT.	GRADE OF TOL.DIM.	SCALE	WEIGHT (KG)	REF. TO ASSY DRG.	ITEM NO.	NO.OF ITEMS
01	26.8.97	UC	PULV-ENGG CODE 4460	E/M/P	1:2 1:2.5	18.138	C-80-645-80		
ZONE	DRG. REDRAWN								

TITLE
SEAL ASSEMBLY

CARD CODE

DRAWING NO. 2-61-180-00689 REV. 01

SHEET NO. 01 NO OF SHEETS 01

THE INFORMATION ON THIS DOCUMENT IS THE PROPERTY OF BHARAT HEAVY ELECTRICALS LIMITED.
IT MUST NOT BE USED DIRECTLY OR INDIRECTLY IN ANY WAY DETRIMENTAL TO THE INTEREST OF THE COMPANY

COMP. FILE NAME 26100689.DWG

REF. DRG. NO. | SIGN. AND DATE | INVENTORY NO

FIRST ANGLE PROJECTION

(ALL DIMENSIONS ARE IN mm)

DJC

DRG.NO. 3-61-300-00688

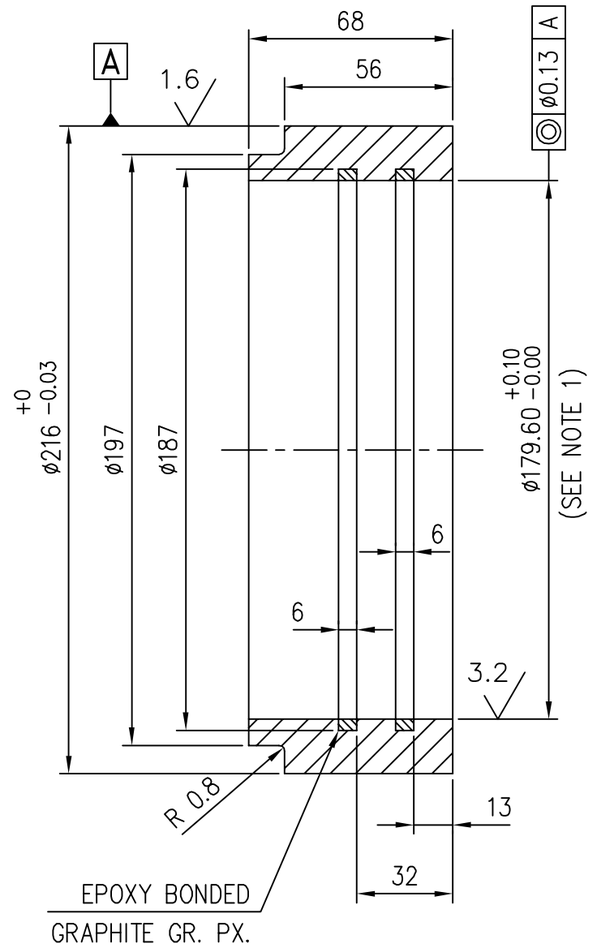

SECTION A-A

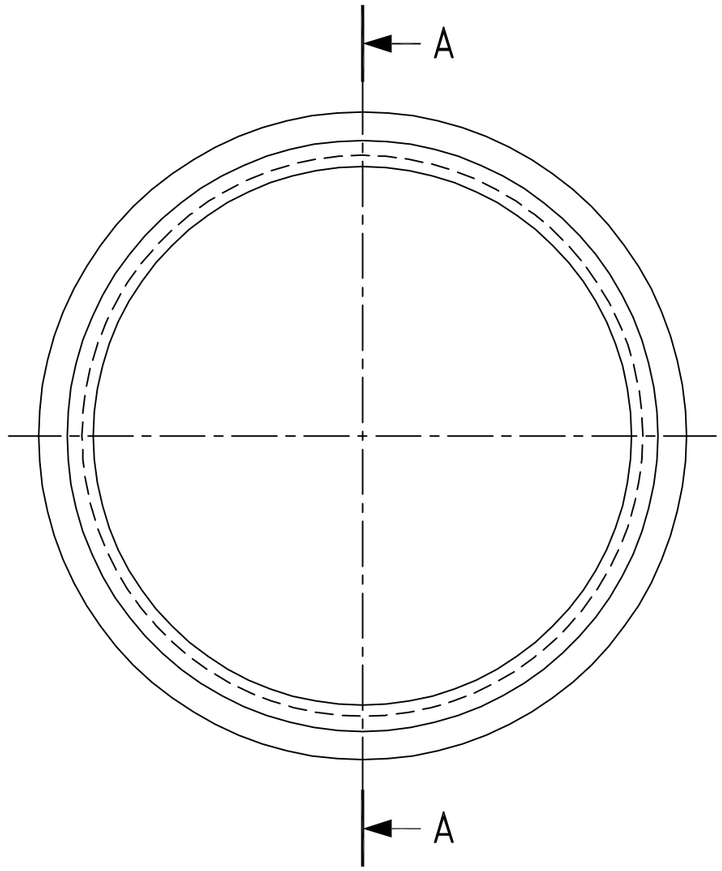

3.2 / 1.6

NOTES:-

1. BORE TO BE FINISH MACHINED AFTER BONDING GRAPHITE.

MATERIAL:

ASTM B271 ALLOY 86300 BRONZE OR ASTM B 584 ALLOY 86300 BRONZE AND EPOXY BONDED GRAPHITE GR. PX

ITEM No	DESCRIPTION	DRAWING No.	VAR. No.	RAW MATERIAL SIZE OR CASTING DRG.No. OR FORGING DRG. No.	MATERIAL CODE	NET WT.	GROSS WT.
01					BA9617333066	6.049	
					MATERIAL SPECN.	QUANTITY	1

THE FOLLOWING CONDITIONS APPLY EXCEPT OTHERWISE STATED...

1. REF.TO HY0230261 FOR UNSPECIFIED TOLERANCES.
2. CHAMFER M/CD SHARP EDGES 1.2 TO 1.0 AT 45°.
3. INTERNAL M/CD CORNER RADII 1 TO 0.7.
4. THE SURFACE ROUGHNESS WHEREVER NOT SHOWN SHALL BE TAKEN FROM THE SURFACE ROUGHNESS SHOWN OUT SIDE BACK SLASHES GIVEN AT THE TOP MOST RIGHT CORNER OF THE DRG.

TYPE OF PRODUCT OR NAME OF CUSTOMER/PROJECT: 883/1003 XRP BOWL MILL

BHARAT HEAVY ELECTRICALS LTD. HYDERABAD

	NAME	SIGN.	DATE	No.OF VAR.
DRN.	ACAD		10.08.98	–
CHD.	N.D.SAEMUL		10.08.98	
APPD.	S.GHATGE		10.08.98	

DEPT.	GRADE OF TOL. DIM.	SCALE	WEIGHT (KG)	REF. TO ASSY DRG.	ITEM No.	No.OF ITEMS
PULV. ENGG. CODE 446	¢/M/f	1:2	6.049	1.61.388.01055	14	30

TITLE: HOUSING COVER WEAR SLEEVE

DRAWING No. 3-61-300-00688 REV. 03

SHEET No. 1 No. OF SHEETS 1

REV.	DATE	ALTERED ACAD	REV.	DATE	ALTERED ACAD
03	8.9.03	CHECKED N.D.S APPD.	02	08.10.98	CHECKED N.D.S APPD.
ø179.60+0.1 WAS 179.58 ±0.13			DRAWING REDRAWN ON CAD INCORPORATING ALL THE PREVIOUS REVISIONS.		

THE INFORMATION ON THIS DOCUMENT IS THE PROPERTY OF BHARAT HEAVY ELECTRICALS LTD. IT MUST NOT BE USED DIRECTLY OR INDIRECTLY IN ANY WAY DETRIMENTAL TO THE INTEREST OF THE COMPANY.

COMP. FILE NAME 36100688.DWG

REF.DRG.NO. B-101-01429-2

INVENTORY NO.

TD-151/REV. 03 SIZE A3

FIRST ANGLE PROJECTION

(ALL DIMENSIONS ARE IN mm)

DJC

DRG.NO. 3-61-300-00693

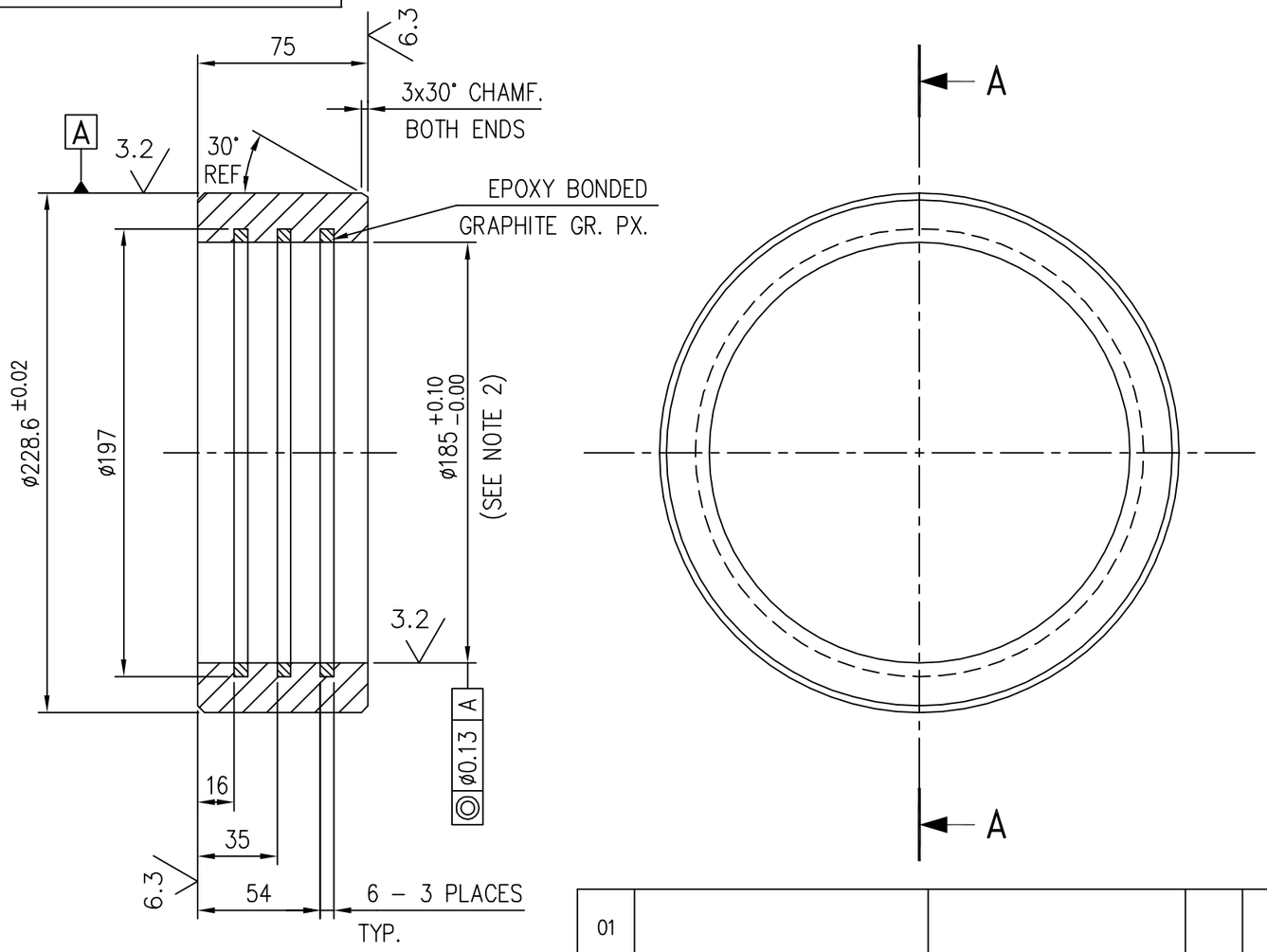

SECTION A-A

6.3 3.2

NOTES:-

1. MATERIAL : B 271 ALLOY 86300 BRONZE AND EPOXY BONDED GRAPHITE GR. PX OR EQUI.
2. BORE TO BE FINISH MACHINED AFTER BONDING GRAPHITE.
3. BREAK ALL SHARP EDGES AND CORNERS UNLESS OTHERWISE NOTED.

ITEM No	DESCRIPTION	DRAWING No.	VAR. No.	RAW MATERIAL SIZE OR CASTING DRG.No. OR FORGING DRG. No.	MATERIAL CODE / MATERIAL SPECN.	NET WT. / QUANTITY	GROSS WT.
01					BA9610273009	7.80	
						1	

THE FOLLOWING CONDITIONS APPLY EXCEPT OTHERWISE STATED...

1. REF.TO HY0230261 FOR UNSPECIFIED TOLERANCES.
2. CHAMFER M/CD SHARP EDGES 1.2 TO 1.0 AT 45°.
3. INTERNAL M/CD CORNER RADII 1 TO 0.7.
4. THE SURFACE ROUGHNESS WHEREVER NOT SHOWN SHALL BE TAKEN FROM THE SURFACE ROUGHNESS SHOWN OUT SIDE BACK SLASHES GIVEN AT THE TOP MOST RIGHT CORNER OF THE DRG.

REV.	DATE	ALTERED		REV.	DATE	ALTERED N.D.S	
		CHECKED	APPD.	02	08.10.98	CHECKED S.G	APPD.

DRAWING REDRAWN ON CAD INCORPORATING ALL THE PREVIOUS REVISIONS.
185 +0.1 WAS 185

TYPE OF PRODUCT OR NAME OF CUSTOMER/PROJECT: 883 XRP BOWL MILL

BHARAT HEAVY ELECTRICALS LTD. HYDERABAD

	NAME	SIGN.	DATE	No.OF VAR.
DRN.	N.D.S		15.9.98	–
CHD.	S.G		15.9.98	
APPD.	K.M.R.		15.9.98	

DEPT. PULV. ENGG.	GRADE OF TOL. DIM.	SCALE	WEIGHT (KG)	REF. TO ASSY DRG.	ITEM No.	No.OF ITEMS
CODE 446	¢/M/f	1:2	7.80	1.61.388.01055	22	30

TITLE: SPRING STUD BEARING

DRAWING No. 3-61-300-00693 REV. 02

SHEET No. 1 No. OF SHEETS 1

THE INFORMATION ON THIS DOCUMENT IS THE PROPERTY OF BHARAT HEAVY ELECTRICALS LTD.
IT MUST NOT BE USED DIRECTLY OR INDIRECTLY IN ANY WAY DETRIMENTAL TO THE INTEREST OF THE COMPANY.

COMP. FILE NAME 36100693.DWG

REF.DRG.NO. B-101-01680-0

INVENTORY NO.

TD-151/REV. 03 SIZE A3

FIRST ANGLE PROJECTION

(ALL DIMENSIONS ARE IN mm)

DRG.NO.3-61-462-00343

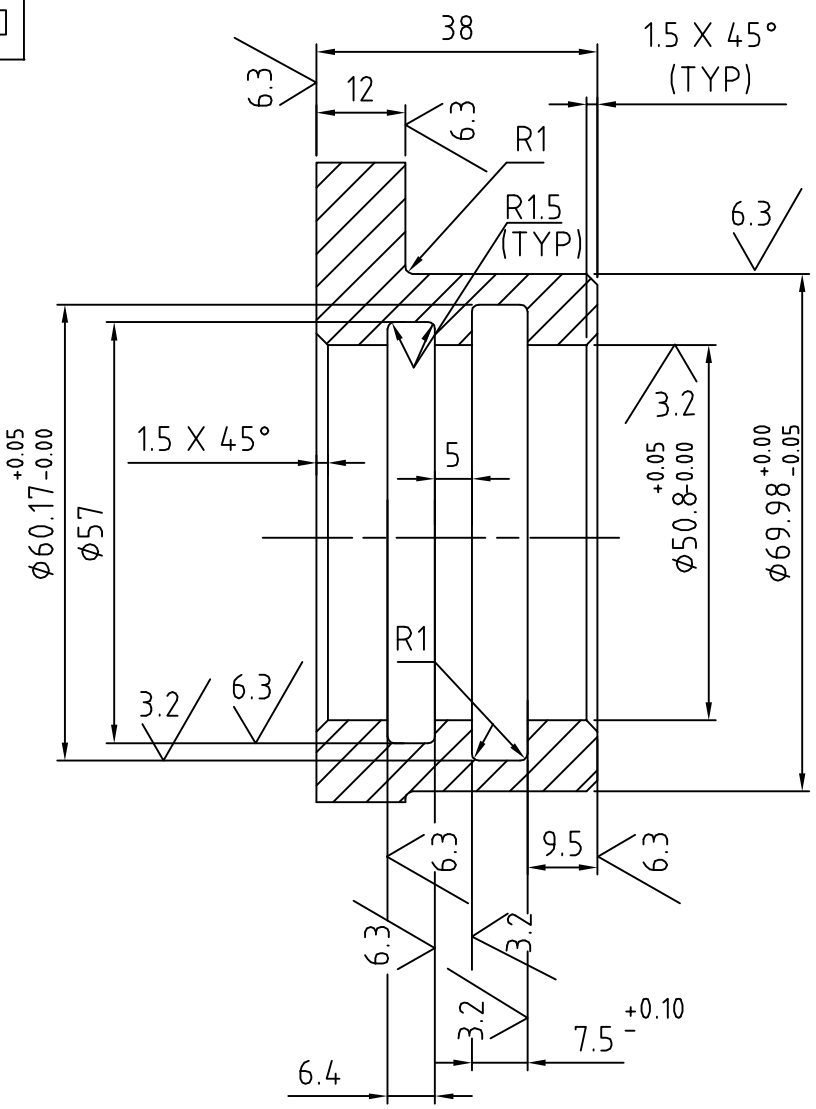

SECTION-AA

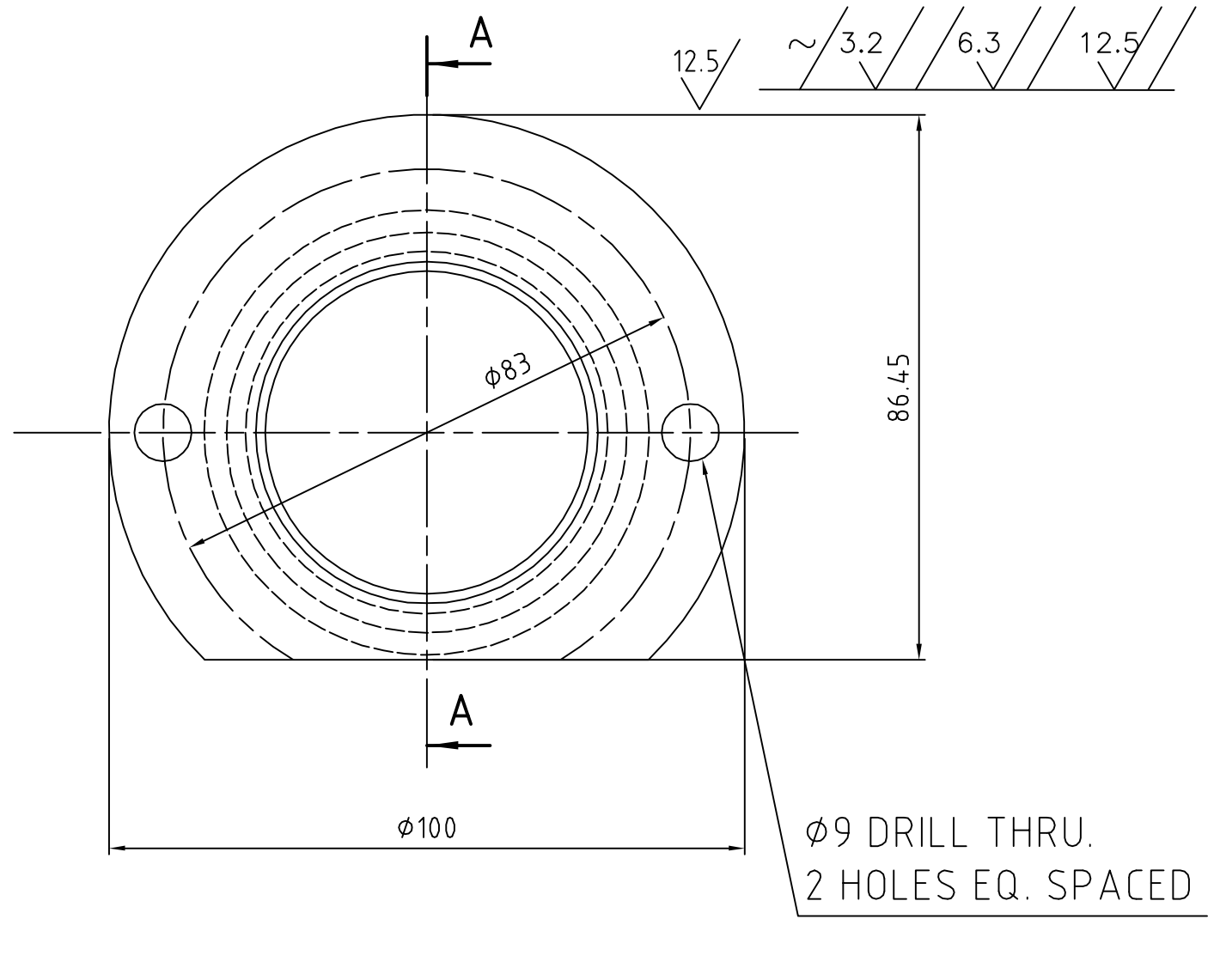

ITEM NO	DESCRIPTION	DRAWING NO.	VAR. NO.	RAW MATERIAL SIZE OR CASTING DRG.NO. OR FORGING DRG.NO.	MATERIAL CODE / MATERIAL SPECN.	NET WT.	GROSS WT.
01	CASTING BRONZE			PATTERN NO M-67-340	BA9313918137 / AA19939	1.72	

THE FOLLOWING CONDITIONS APPLY EXCEPT OTHERWISE STATED...

1. REF.TO HY0230261 FOR UNSPECIFIED TOLERANCES.
2. CHAMFER M/CD SHARP EDGES 1.2 TO 1.0 AT 45°.
3. INTERNAL M/CD CORNER RADII 1 TO 0.7.
4. THE SURFACE ROUGHNESS WHEREVER NOT SHOWN SHALL BE TAKEN FROM THE SURFACE ROUGHNESS SHOWN OUT SIDE BACK SLASHES GIVEN AT THE TOP MOST RIGHT CORNER OF THE DRG.

TYPE OF PRODUCT
OR
NAME OF CUSTOMER/PROJECT

BHARAT HEAVY ELECTRICALS LTD.
HYDERABAD

	NAME	SIGN.	DATE	NO.OF VAR.
DRN.	E.M.ASHOK		13-02-03	
CHD.	AMAN		13-02-03	
APPD.	G.K		13-02-03	

DEPT.	PULVE.ENGG	SCALE	WEIGHT (KG)	REF. TO ASSY DRG.	ITEM NO.	NO.OF ITEMS
CODE	446	1:1	1.72	0-61-462-00112		

TITLE PACKING GLAND (MILL DISCHARGE VALVE)

DRAWING NO. 3-61-462-00343 REV. 01

SHEET NO. 01 NO OF SHEETS 01

REV.	DATE	ALTERED	CHD.	APPD.	REV.	DATE	ALTERED E.M.ASHOK	CHD.	APPD.
ZONE					01	25-01-03	DRAWING REDRAWN ON AUTOCAD		

INVENTORY NO.

REF.DRG.NO.

FILE NAME 36100343.DWG

THE INFORMATION ON THIS DOCUMENT IS THE PROPERTY OF BHARAT HEAVY ELECTRICALS LTD.
IT MUST NOT BE USED DIRECTLY OR INDIRECTLY IN ANY WAY DETRIMENTAL TO THE INTEREST OF THE COMPANY.

TD-151/REV. 03 SIZE A3

FIRST ANGLE PROJECTION

(ALL DIMENSIONS ARE IN mm)

MES

DRG. NO. 3-61-480-00348

SH. 01 OF 01

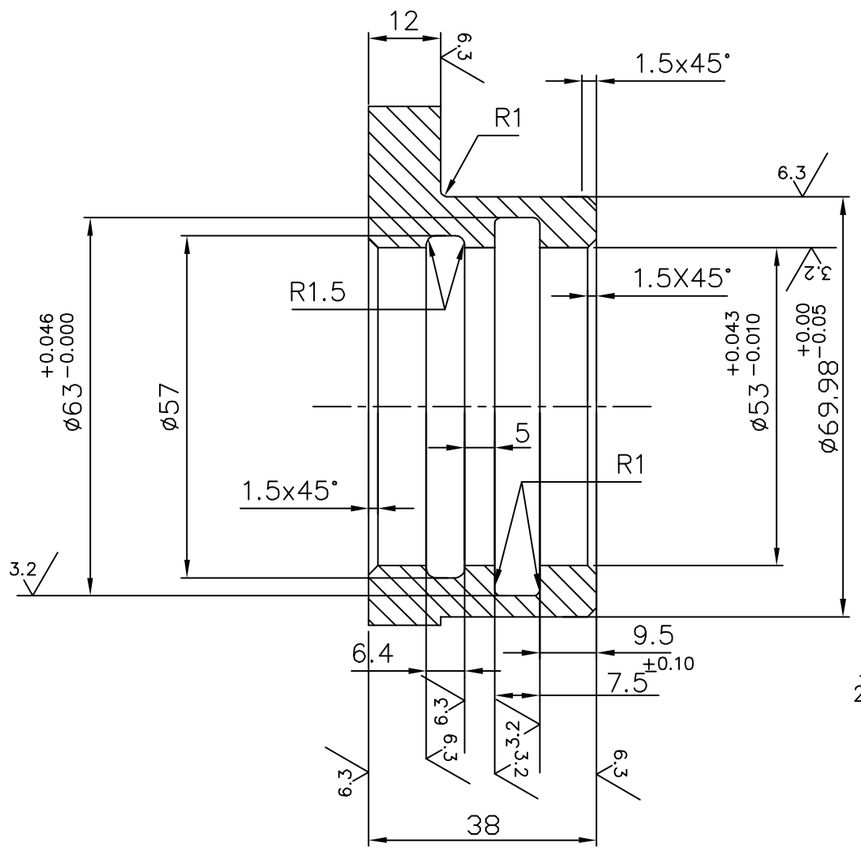

SECTION–'AA'

DEBURR SHARP EDGES AND CORNERS

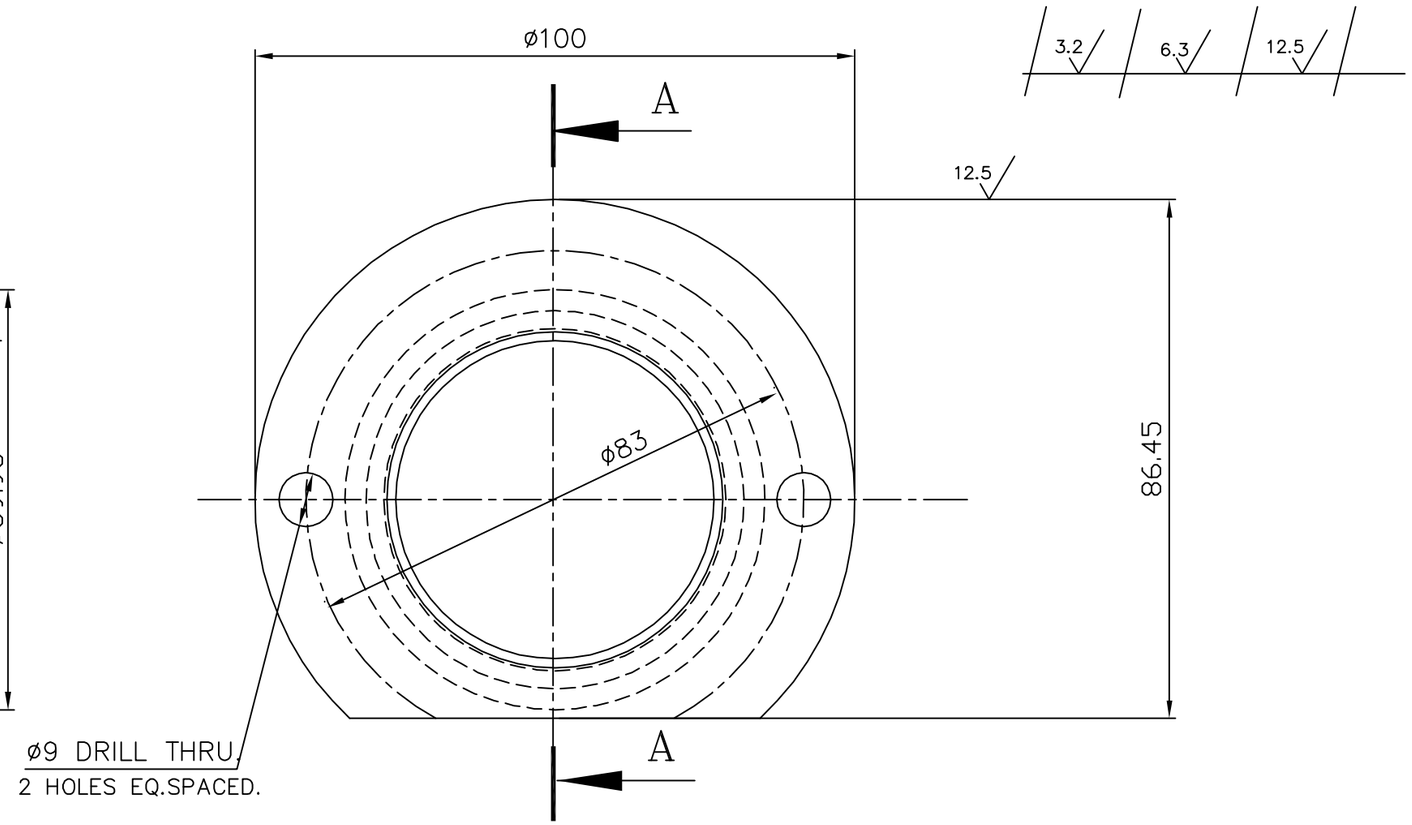

	CASTING BRONZE	HYD.PAT.NO M–67–340		BA9313918080	1.72
				AA19939	
ITEM NO.	DESCRIPTION	DRAWING NO	IT NO.	MATL CODE	UNIT WT.
			VAR NO	MATL SPCN.	QTY

THE FOLLOWING CONDITIONS APPLY EXCEPT OTHERWISE STATED.

1. REF. TO HY0230261 FOR UNSPECIFIED TOLERANCES.
2. CHAMFER M/CD. SHARP EDGES 1.2 TO 1.0 AT 45°
3. INTERNAL M/CD. CORNER RADII 1 TO 0.7
4. THE SURFACE ROUGHNESS WHERE–EVER NOT SHOWN SHALL BE TAKEN FROM THE SURFACE ROUGHNESS SHOWN OUT SIDE THE BACK SLASH GIVEN ON THE TOP MOST RIGHT CORNER OF THE DRG.

TYPE OF PRODUCT OR

NAME OF CUSTOMER/PROJECT

BHARAT HEAVY ELECTRICALS LIMITED
HYDERABAD

	NAME	SIGN.	DATE	NO.OF VAR.
DRN.	N.D.S		22.05.98	
CHD.	S.GHATGE		14.09.98	
APPD.	K.M.R		14.09.98	

DEPT.	UNTOL. DIMS.		SCALE	WEIGHT (KG)	REF. TO ASSY. DRG.	ITEM NO.	NO.OF ITEMS
BMD DEPT.CODE 446	GR. C/M/F		1:1	1.72			

TITLE PACKING GLAND
: MILL DISCHARGE VALVE:

CARD CODE

DRAWING NO. 3–61–480–00348 REV. 02

SHT. No 01 NO. OF SHT. 01

REV.	DATE	ALTERED	REV.	DATE	ALTERED
		CHD/APPD	02	22.05.98	CHD/APPD
ZONE			ZONE		DRG. REDRAWN INCORPORATING ALL PREVIOUS REVISIONS

INVENTORY NO | SIGN. AND DATE | REF. DRG. NO. | COMPUTER FILE NAME 36100348.DWG

GENERAL DIMENSIONAL LIMITS,FITS & TOLERANCES AS PER HY0230261

THE INFORMATION ON THIS DOCUMENT IS THE PROPERTY OF BHARAT HEAVY ELECTRICALS LIMITED. IT MUST NOT BE USED DIRECTLY OR INDIRECTLY IN ANY WAY DETRIMENTAL TO THE INTEREST OF THE COMPANY

FIRST ANGLE PROJECTION

(ALL DIMENSIONS ARE IN mm)

DRG.NO. 3-61-480-00350

THE INFORMATION ON THIS DOCUMENT IS THE PROPERTY OF BHARAT HEAVY ELECTRICALS LTD.
IT MUST NOT BE USED DIRECTLY OR INDIRECTLY IN ANY WAY DETRIMENTAL TO THE INTEREST OF THE COMPANY.

COMP. FILE NAME 36100350.DWG

REF.DRG.NO.

INVENTORY NO.

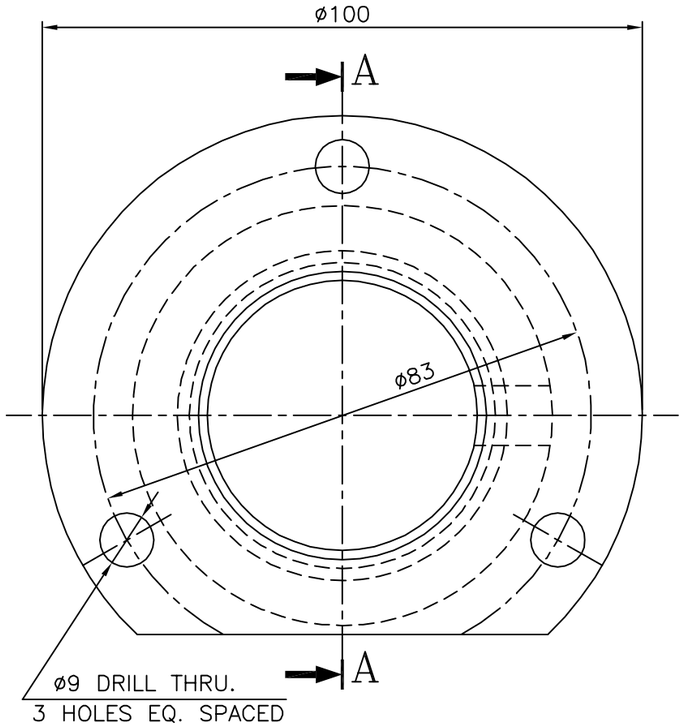

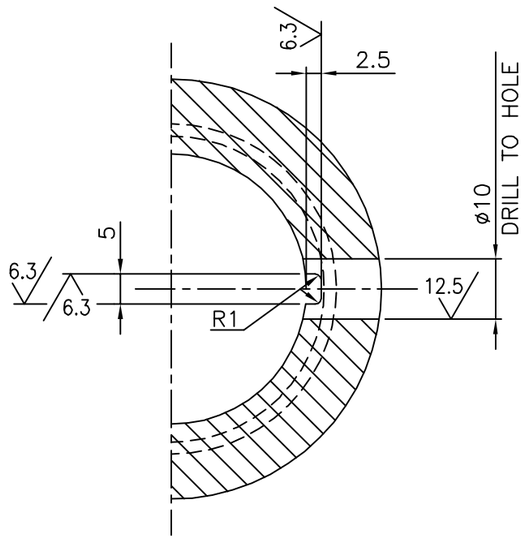

SECTION B-B

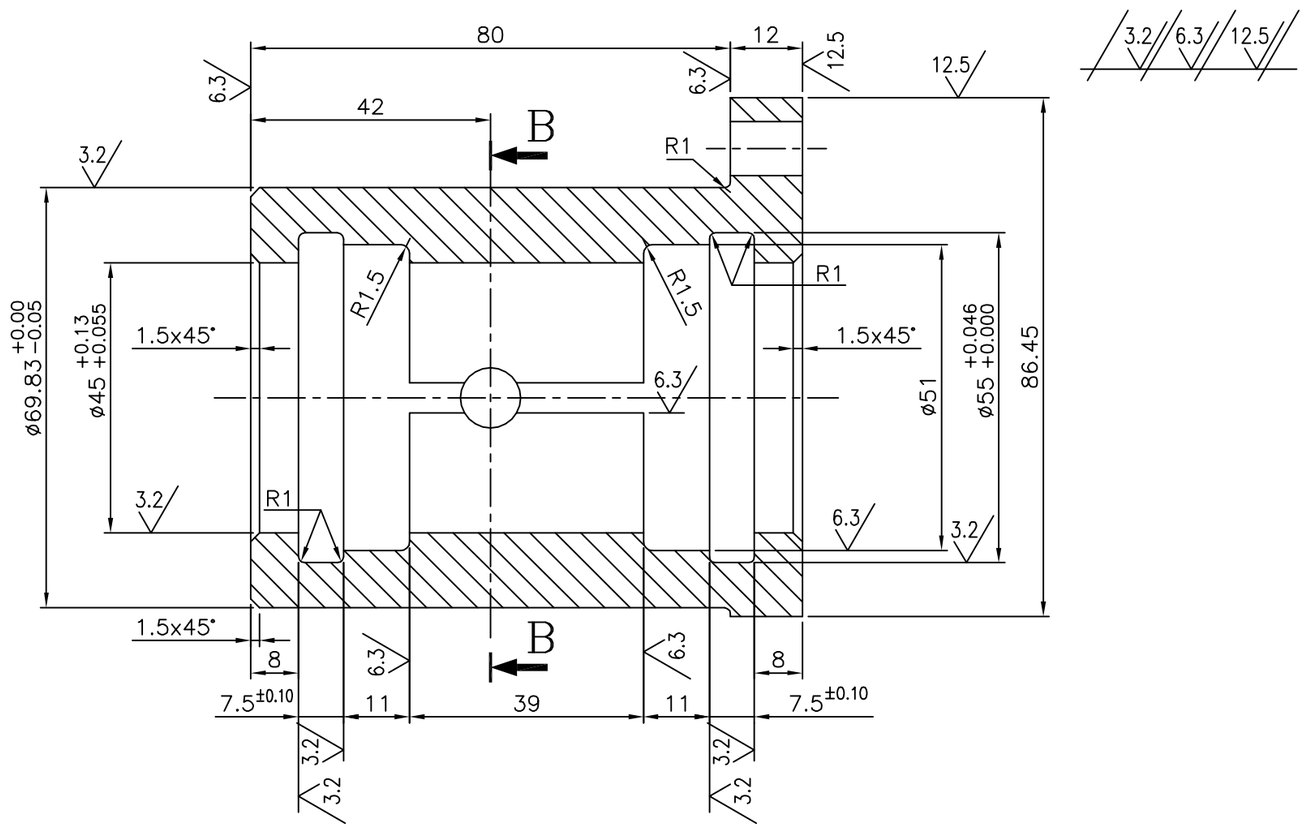

SECTION A-A

DEBURR ALL SHARP EDGES AND CORNERS

	CASTING BRONZE	HYD. PAT. No. M-67-341			BA9313918099	1.96	
					AA19939		
ITEM NO	DESCRIPTION	DRAWING NO.	VAR. NO.	RAW MATERIAL SIZE OR CASTING DRG.NO. OR FORGING DRG.NO.	MATERIAL CODE	NET WT.	GROSS WT.
					MATERIAL SPECN.	QUANTITY	

THE FOLLOWING CONDITIONS APPLY EXCEPT OTHERWISE STATED...

1. REF.TO HY0230261 FOR UNSPECIFIED TOLERANCES.
2. CHAMFER M/CD SHARP EDGES 1.2 TO 1.0 AT 45°.
3. INTERNAL M/CD CORNER RADII 1 TO 0.7.
4. THE SURFACE ROUGHNESS WHEREVER NOT SHOWN SHALL BE TAKEN FROM THE SURFACE ROUGHNESS SHOWN OUT SIDE BACK SLASHES GIVEN AT THE TOP MOST RIGHT CORNER OF THE DRG.

TYPE OF PRODUCT OR NAME OF CUSTOMER/PROJECT: 1003xRPBM

BHARAT HEAVY ELECTRICALS LTD.
HYDERABAD

	NAME	SIGN.	DATE
DRN.	POORNIMA		22.04.03
CHD.	G.K		22.04.03
APPD.	J.G.K		22.04.03

NO.OF VAR. NA

DEPT.	PULV-ENGG	SCALE	WEIGHT (KG)	REF. TO ASSY DRG.	ITEM NO.	NO.OF ITEMS
CODE	446	1:1	34.22	NA	NA	NA

TITLE: PACKING GLAND (MILL DISCHARGE VALVE)

DRAWING NO. 3-61-480-00350 REV. 04

SHEET NO. 01 NO OF SHEETS 01

REV.	DATE	ALTERED		REV.	DATE	ALTERED	
04	19.10.04	CHECKED	APPD.	03	22.04.03	CHECKED	APPD.
DIMENSION 42 WAS 40				DRAWING IS REDRAWN ON ACAD INCORPORATING THE ALL PREVIOUS REVISIONS.			

TD-151/REV. 03 SIZE A3

FIRST ANGLE PROJECTION

(ALL DIMENSIONS ARE IN mm)

DRG.NO. 3-61-496-00216

THE INFORMATION ON THIS DOCUMENT IS THE PROPERTY OF BHARAT HEAVY ELECTRICALS LTD.
IT MUST NOT BE USED DIRECTLY OR INDIRECTLY IN ANY WAY DETRIMENTAL TO THE INTEREST OF THE COMPANY.

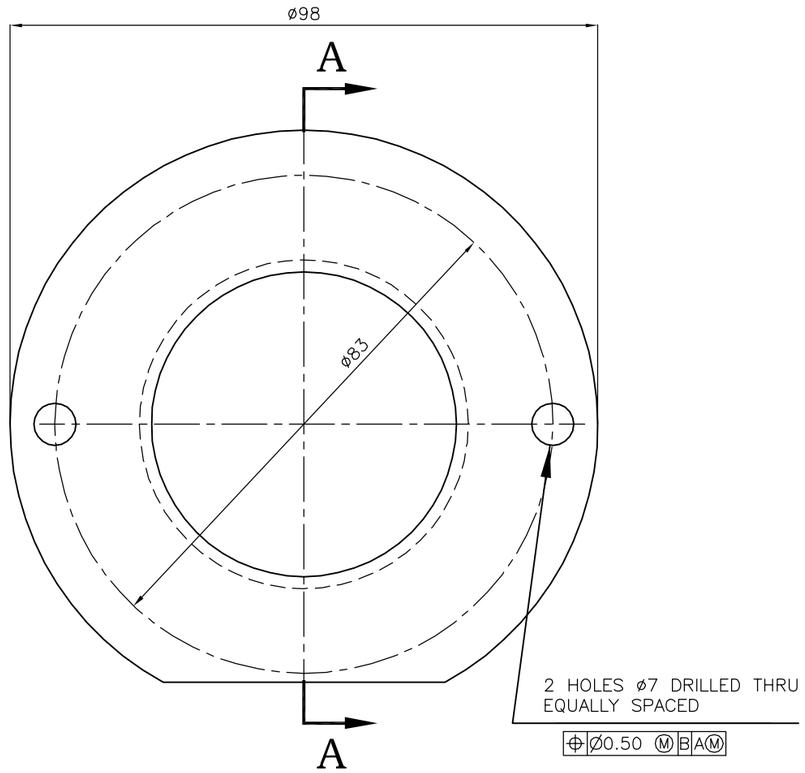

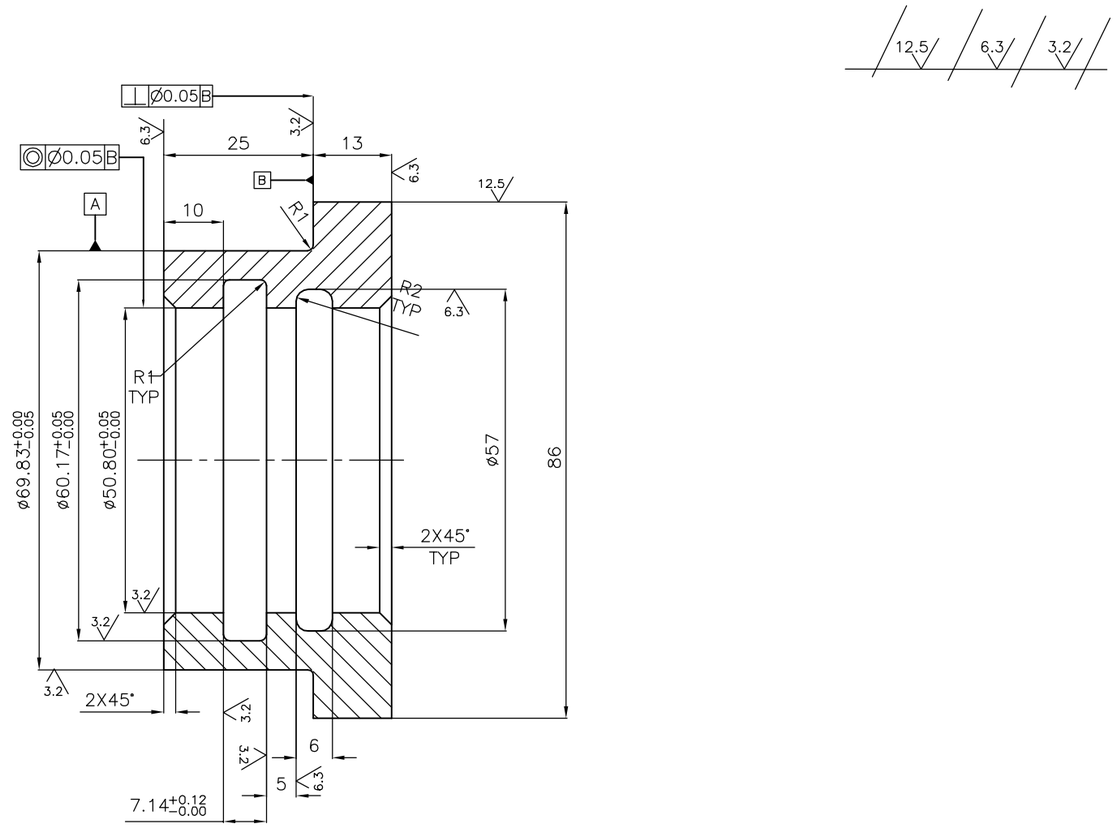

SECTION-AA

NOTES:-

~~01. BHEL HYD PATTERN NO.11-67-332~~

02. BREAK ALL SHARP EDGES AND CORNERS UNLESS OTHERWISE NOTED.

~~03. CASTING DRG. NO. 90-FC-100-091~~

04. PATTERN NO. 3-61-496-00216

ITEM NO	DESCRIPTION	DRAWING NO.	VAR. NO.	RAW MATERIAL SIZE OR CASTING DRG.NO. OR FORGING DRG.NO.	MATERIAL CODE / MATERIAL SPECN.	NET WT.	GROSS WT.
	CASTING (M-67-332)				BA9313918013 / AA19939	1.00 / 1	

THE FOLLOWING CONDITIONS APPLY EXCEPT OTHERWISE STATED...

1. REF.TO HY0230261 FOR UNSPECIFIED TOLERANCES.
2. CHAMFER M/CD SHARP EDGES 1.2 TO 1.0 AT 45°.
3. INTERNAL M/CD CORNER RADII 1 TO 0.7.
4. THE SURFACE ROUGHNESS WHEREVER NOT SHOWN SHALL BE TAKEN FROM THE SURFACE ROUGHNESS SHOWN OUT SIDE BACK SLASHES GIVEN AT THE TOP MOST RIGHT CORNER OF THE DRG.

REFER TO HY0230261 FOR UNSPECIFIED TOLERANCES

REV.	DATE	ALTERED	CHD.	APPD.	REV.	DATE	ALTERED ANU	CHD. NDS	APPD. G.K
					04	8.10.04			
ZONE					ZONE	DRG. REDRAWN IN AUTOCAD INCORPORATING ALL PREVIOUS REVISIONS			

TYPE OF PRODUCT OR NAME OF CUSTOMER/PROJECT: 883/1003 XRP BM

BHARAT HEAVY ELECTRICALS LTD. HYDERABAD

	NAME	SIGN.	DATE	NO.OF VAR.
DRN.	ANU		08.10.04	
CHD.	SAMUEL		08.10.04	
APPD.	KISTAIAH		08.10.04	

DEPT.	PULVE.ENGG	SCALE	WEIGHT (KG)	REF. TO ASSY DRG.	ITEM NO.	NO.OF ITEMS
CODE	446	1:1	1.00	B-110-00178-02		

TITLE: PACKING GLAND (MILL DISCHARGE VALVE)

DRAWING NO. 3-61-496-00216 REV. 04

SHEET NO. 01 NO OF SHEETS 01

36100216.DWG FILE NAME

REF.DRG.NO.

INVENTORY NO.

TD-151/REV. 03 SIZE A3

FIRST ANGLE PROJECTION

(ALL DIMENSIONS ARE IN mm)

DRG. NO. 3-61-496-00217

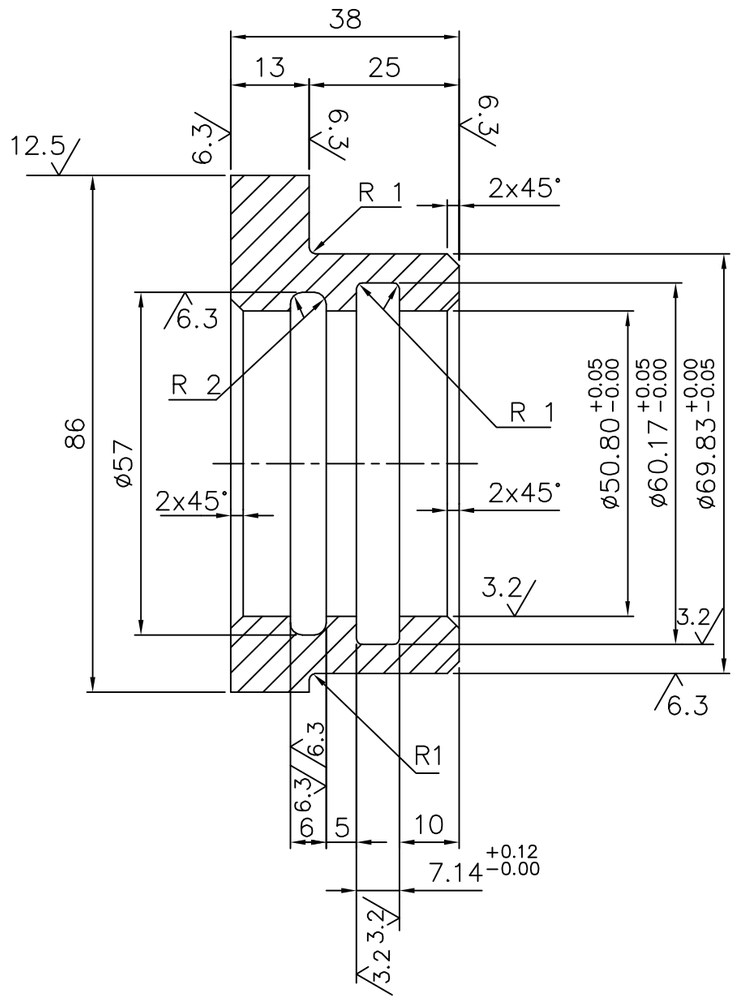

SECTION–AA

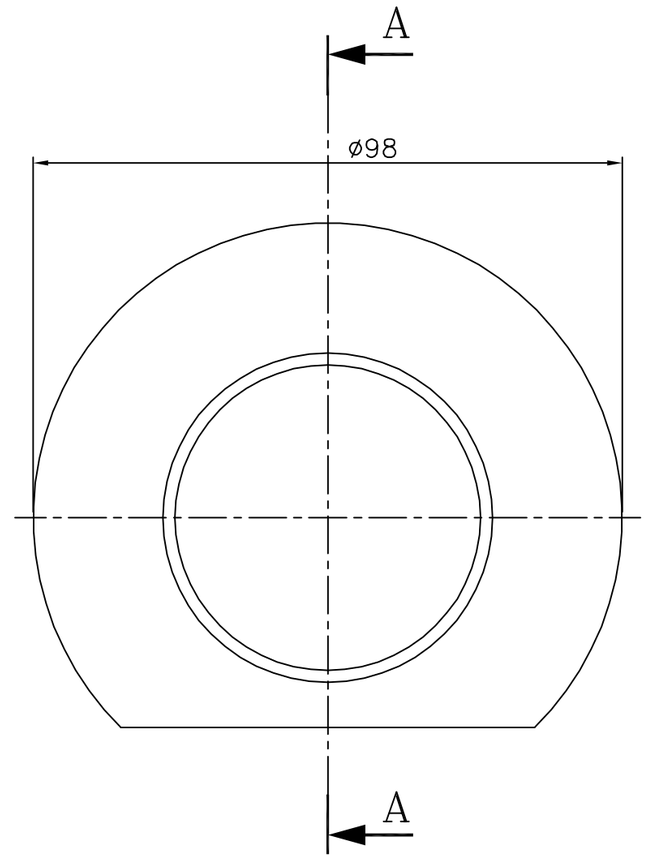

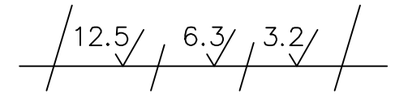

NOTE: –

01. BREAK ALL SHARP EDGES & CORNERS UNLESS OTHERWISE SPECIFIED.
02. BHEL HYD. PATTERN NO: M–67–332
03. CASTING TOLERANCE TO BE AS PER HY0230261

ITEM NO	DESCRIPTION	DRAWING NO	MATERIAL CODE / MATERIAL SPEC.	UNIT WT. / QTY.
01	CASTING		BA9313918021 / AA19939	0.90 / 1

TYPE OF PRODUCT OR NAME OF CUSTOMER/PROJECT: 1003 XRP BOWL MILLS

BHARAT HEAVY ELECTRICALS LTD. HYDERABAD

		SIGN.	DATE	NO.OF VAR.
DRN.	A.C.S/PAVAN			N.A.
CHD.	R.JAGANNATH			
APPD.	G.KISTAIAH			

REV.	DATE	ATD & CHD	REV.	DATE	ALTERED	CHECKED	APPD
			03				

ZONE: DRG. REDRAWN BY INCORPORATING ALL PREVIOUS REVISIONS

DEPT. PULV.ENGG	GRADE OF TOL.DIM.		SCALE	WEIGHT (KG)	REF. TO ASSY DRG.	ITEM NO.	NO.OF ITEMS
CODE 446	¢/M/¢		1 : 1	0.90	0–61–469–00586	17	65

TITLE: PACKING GLAND. (MILL DISCHARGE VALVE)

CARD CODE: N.A.

DRAWING NO. 3–61–496–00217 REV. 03

SHEET NO. 01 NO OF SHEETS 01

THE INFORMATION ON THIS DOCUMENT IS THE PROPERTY OF BHARAT HEAVY ELECTRICALS LIMITED. IT MUST NOT BE USED DIRECTLY OR INDIRECTLY IN ANY WAY DETRIMENTAL TO THE INTREST OF THE COMPANY

GENERAL DIMENSIONAL LIMITS,FITS & TOLERENCES AS PER PS HY0230261

REF. DRG. NO. B–110–00178A

SIGN. AND DATE

INVENTORY NO

300217.DWG/1069

FIRST ANGLE PROJECTION

(ALL DIMENSIONS ARE IN mm)

DRG.NO. 3-61-496-00218

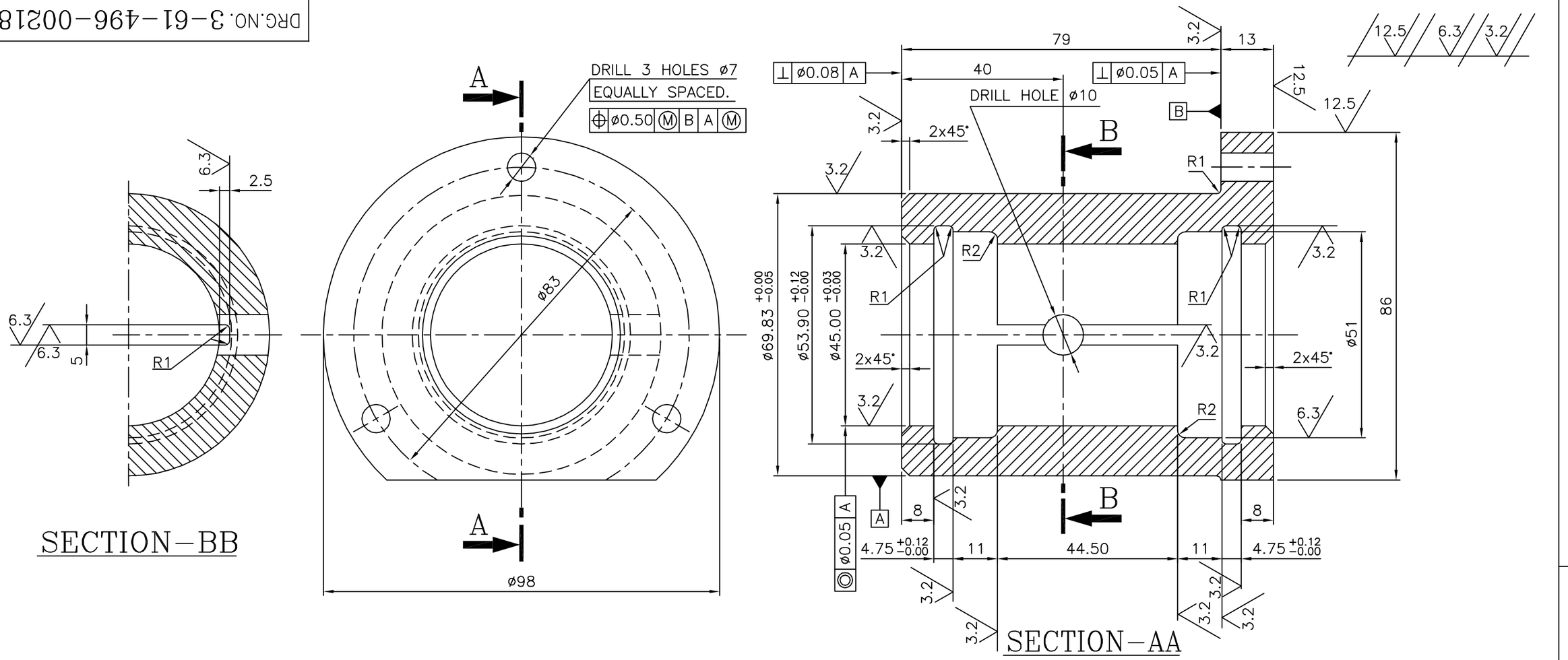

THE INFORMATION ON THIS DOCUMENT IS THE PROPERTY OF BHARAT HEAVY ELECTRICALS LTD.
IT MUST NOT BE USED DIRECTLY OR INDIRECTLY IN ANY WAY DETRIMENTAL TO THE INTEREST OF THE COMPANY.

36100218.DWG
FILE NAME

REF.DRG.NO.

INVENTORY NO.

NOTES:-

01. BREAK ALL SHARP EDGES AND CORNERS UNLESS OTHERWISE NOTED.
~~02. CASTING DRG. NO. 90-FC-100-092~~
03. PATTERN NO. 3-61-496-00218

ITEM NO	DESCRIPTION	DRAWING NO.	VAR. NO.	RAW MATERIAL SIZE OR CASTING DRG.NO. OR FORGING DRG.NO.	MATERIAL CODE	NET WT.	GROSS WT.
	CASTING				BA9313918030	2.00	
					AA19939		
					MATERIAL SPECN.	QUANTITY	

THE FOLLOWING CONDITIONS APPLY EXCEPT OTHERWISE STATED...

1. REF.TO HY0230261 FOR UNSPECIFIED TOLERANCES.
2. CHAMFER M/CD SHARP EDGES 1.2 TO 1.0 AT 45°.
3. INTERNAL M/CD CORNER RADII 1 TO 0.7.
4. THE SURFACE ROUGHNESS WHEREVER NOT SHOWN SHALL BE TAKEN FROM THE SURFACE ROUGHNESS SHOWN OUT SIDE BACK SLASHES GIVEN AT THE TOP MOST RIGHT CORNER OF THE DRG.

TYPE OF PRODUCT OR NAME OF CUSTOMER/PROJECT: 883/1003 XRP BM

BHARAT HEAVY ELECTRICALS LTD.
HYDERABAD

	NAME	SIGN.	DATE	NO.OF VAR.
DRN.	UNIC		24.01.97	
CHD.	B.M.R		08.10.97	
APPD.	K.M.R		08.10.97	

DEPT. PULV ENGG.	SCALE	WEIGHT (KG)	REF. TO ASSY DRG.	ITEM NO.	NO.OF ITEMS
CODE 446	1:1	2.00	B-110-00179-4		

TITLE: PACKING GLAND (MILL DISCHARGE VALVE)

DRAWING NO. 3-61-496-00218 REV. 06

SHEET NO. 01 NO OF SHEETS 01

REV.	DATE	ALTERED		REV.	DATE	ALTERED UC	
		CHD.	APPD.	06	24.04.99	CHD.	APPD.
ZONE				ZONE	DRG. REDRAWN BY INCORPORATING THE PREVIOUS REV. DIM 53.90 WAS 53.98.		

TD-151/REV. 03 SIZE A3

FIRST ANGLE PROTECTION (ALL DIMENSIONS ARE IN mm)

DRG NO 3-61-576-00098/01

THE INFORMATION ON THIS DOCUMENT IS THE PROPERTY OF BHARAT HEAVY ELECTRICALS LIMITED
IT MUST NOT BE USED DIRECTLY OR INDIRECTLY IN ANY WAY DETRIMENTAL TO THE INTEREST OF THE COMPANY

SECTION-AA

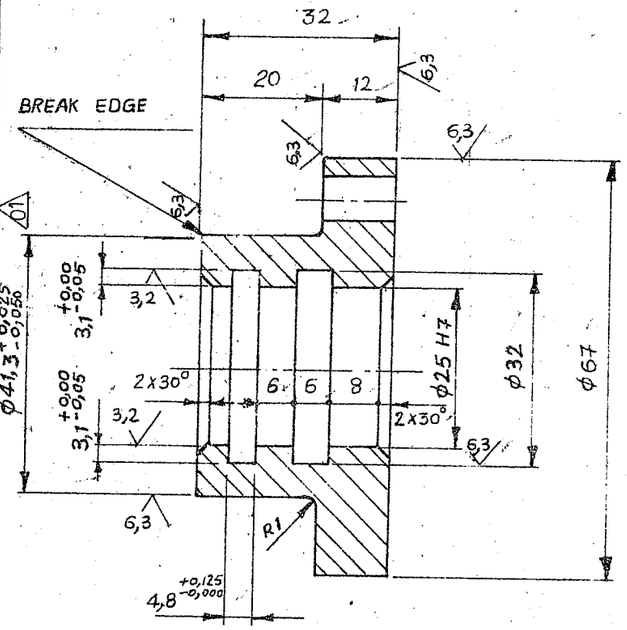

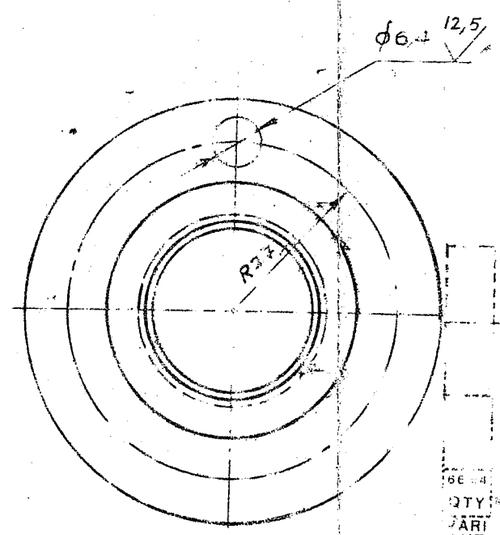

A

$\phi 25$	H7	+0,021	-0,000
NOMINAL DIMENSION	TOLERENCE SYMBOL	UPPER TOLERENCE	LOWER TOLERENCE

REV	DATE	ALTERED	REV	DATE	ALTERED
		CHECKED	01	26 5 81	CKD:

APPROVED

DIMN $\phi 41.3^{+0.025}_{-0.050}$ VASO 1.2

12.5 6.3 3.2

OLD PATTERN NO.30-F-002-124 (REF.)
NEW PATTERN NO.3-61-576-00098.
BHEL HYD. PATTERN NO. M-67-325

	PACKING GLAND (BRONZE)					9672022510				0.44	
						B.144 LR.GR3A		FA.19939		1	
QTY OF VARIANT	UNIT OF QUANTITY	DESCRIPTION	ITEM	STD	DRAWING NO	VARIANT	MATERIAL CODE	A	COMP GROUP	UNIT WT (KG)	
							MATERIAL SPECN	C		QTY	BMT/GRSP

CARD TYPE-1

TYPE OF PRODUCT

NAME OF CUSTOMER/PROJECT 76" BOWL MILLS

BHARAT HEAVY ELECTRICALS LIMITED
HYDERABAD

DEPT. CODE +46	SCALE 1:1	WEIGHT (KG) 0.44	REF. TO ASSY. DRG. 1-61-576-00028	ITEM NO. 05

TITLE PASKING GLAND

	NAME	SIGN.	DATE
DRAWN	G.NARSIMULU		
CHECKED			
APPROVED			

DIMENSIONS ARE CONTROLLED WITHIN LIMITS
THOSE WHICH MINIMUM TOLERANCE ± 25mm
UNLESS OTHERWISE SHOWN NON-MACHINING
TOLERANCE

CARD CODE

DRAWING NO. 3-61-576-00098 01

SHEET No. 1 No. OF SHEETS 1

INVENTORY NO. | SIGN. AND DATE | REF. DRG. No. 30-F002-124

FIRST ANGLE PROJECTION

ALL DIMENSIONS ARE IN mm.

REV.	DATE	ALTERED	REV.	DATE	ALTERED	REV.	DATE	ALTERED
03	27.4.99	CHECKED			CHECKED			CHECKED
		APPROVED			APPROVED			APPROVED

DRAWING REDRAWN INCORPORATING ALL PREVIOUS REVISONS

THE INFORMATION ON THIS DOCUMENT IS THE PROPERTY OF BHARAT HEAVY ELECTRICALS LIMITED. IT MUST NOT BE USED DIRECTLY OR INDIRECTLY IN ANY WAY DETRIMENTAL TO THE INTEREST OF THE COMPANY.

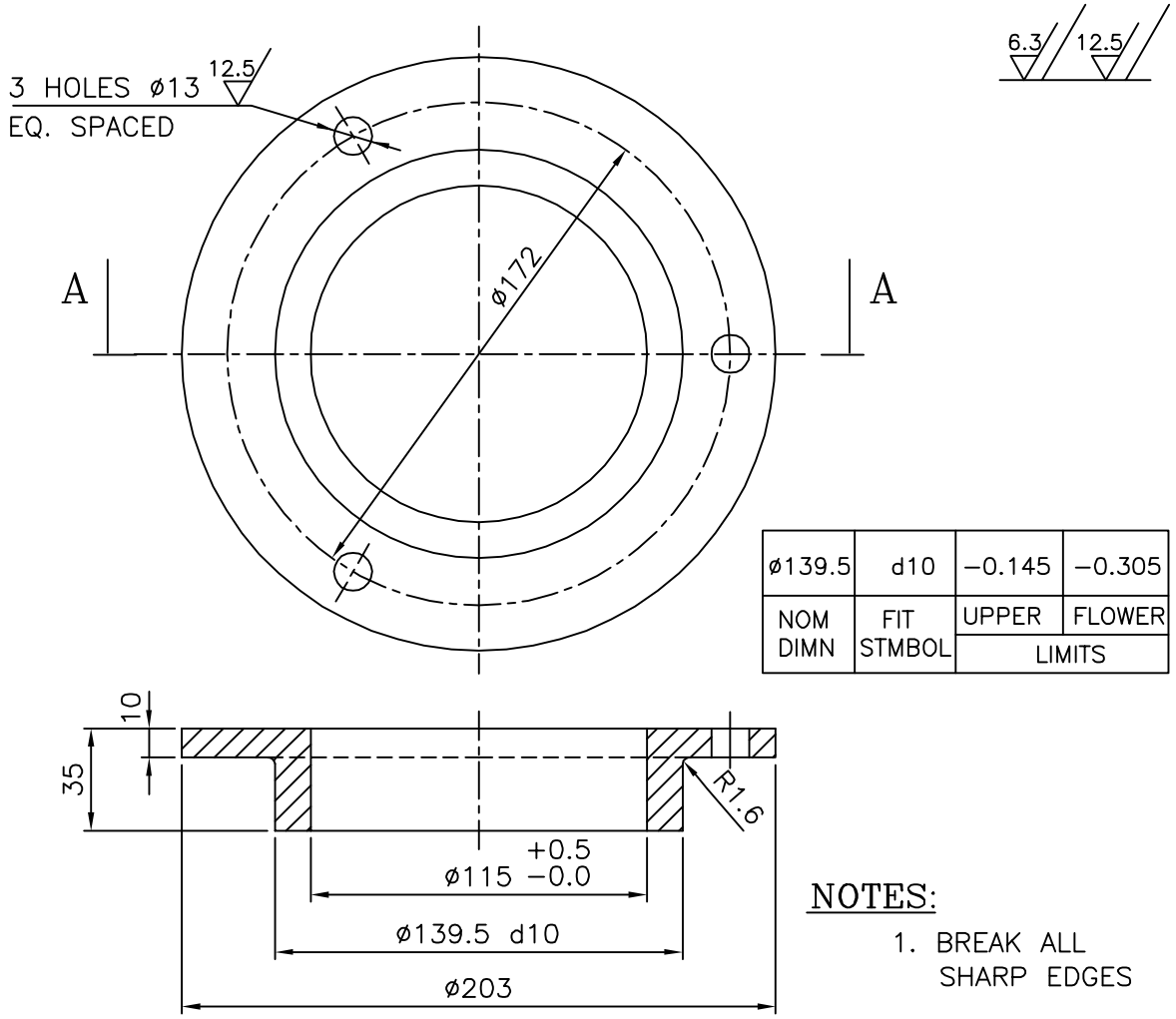

ø139.5	d10	−0.145	−0.305
NOM DIMN	FIT STMBOL	UPPER	FLOWER
		LIMITS	

SECTION A–A

NOTES:

1. BREAK ALL SHARP EDGES
2. PATTERN NO: M–67–329

BRONZE CASTING			BA 9313918005	3.03	
			AA 19939		
DESCRIPTION & DRG.NO.	VAR NO.	RAW MATERIAL SIZE OR CASTING DRG.NO. OR FORGING DRG.NO.	MATL. CODE	NET.WT.	GROSS WT
			MATL. SPECN.	QTY.	

TYPE OF PRODUCT OR NAME OF CUSTOMER/PROJECT: 763,783,803,883,963,983&1003 XRP BOWL MILL

BHARAT HEAVY ELECTRICALS LTD. HYDERABAD

	NAME	SIGN	DATE
DRN.	N.D.S		27.4.99
CKD.	S.G		27.4.99
APPD.	K.M.R		27.4.99

NO.OF VAR. −NA−

REF. TO HY0230261 FOR UNSPECIFIED TOLERANCES.

DEPT.	PULV.ENGG.	SCALE	WEIGHT(K.G.)	REF.TO ASSY.DRG.	ITEM NO.	NO.OF ITEM
CODE	446	1:2.5	3.03	40–F–002–189–A	−NA−	−NA−

TITLE: PACKING GLAND

DRAWING NO. 4–61–176–00013 REV. 03

SHT.NO. 01 NO.OF SHT. 01

COMPUTER NO. 46100013.DWG

REF. DRG. NO.

SIGN. & DATE

INVENTORY NO.

TD 152–REV.03

A4 SIZE

FIRST ANGLE PROJECTION (ALL DIMENSIONS ARE IN mm) MES

REV.	DATE	ALTERED / CHECKED	REV.	DATE	ALTERED / CHECKED	
03	14-06-03	ALTERED E.M.A CHECKED	04	31.8.04	ALTERED ANU CHECKED GK	
		DRG. REDRAWN INCORPORATING ALL PREVIOUS REVISIONS			GEOMETRIC TOL. ADDED	

THE INFORMATION ON THIS DOCUMENT IS THE PROPERTY OF BHARAT HEAVY ELECTRICALS LIMITED
IT MUST NOT BE USED DIRECTLY OR INDIRECTLY IN ANY WAY DETRIMENTAL TO THE INTEREST OF THE COMPANY

COMPUTER FILE NAME 46100679.DWG

SIGN. AND DATE

INVENTORY NO

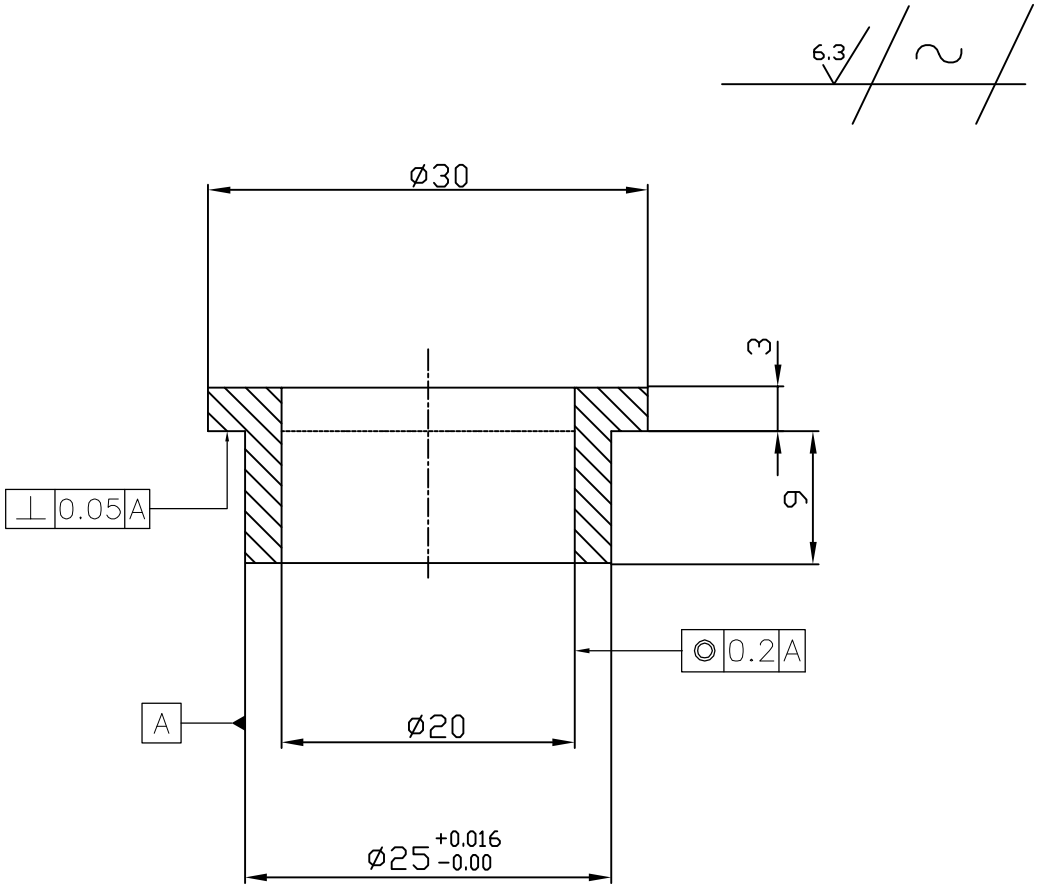

ITEM NO	DESCRIPTION/ REMARKS	STD	MATL. CODE / MATL. SPEN.	A/C	UNIT	UNIT Wt. / QTY.
	CASTING 30x15		BA 9313403030 AA19934			0.020

BHARAT HEAVY ELECTRICALS LIMITED
HYDERABAD

	NAME	SIGN.	DATE
DRN.	E.M.ASHOK		14-06-03
CHD.	N.D.SAMUEL		14-06-03
APPD.	S.GHATGE		14-06-03

DEPT.	UNTOL. DIM.		SCALE	WEIGHT (KG)	REF. TO ASSY DRG.	ITEM NO.	NO.OF ITEMS
BMD DEPT.CODE 446	GR. ¢/M/F		2:1	0.020	NA	NA	NA

TITLE
FLANGED BUSHING

DRAWING NO. 4-61-180-00679 REV. 04

SHT No. 1 NO OF SHT. 1

FIRST ANGLE PROJECTION

ALL DIMENSIONS ARE IN mm.

REV.	DATE	ALTERED	REV.	DATE	ALTERED	REV.	DATE	ALTERED
01	08.10.98	CHECKED			CHECKED			CHECKED
		APPROVED			APPROVED			APPROVED

DRAWING REDRAWN ON CAD

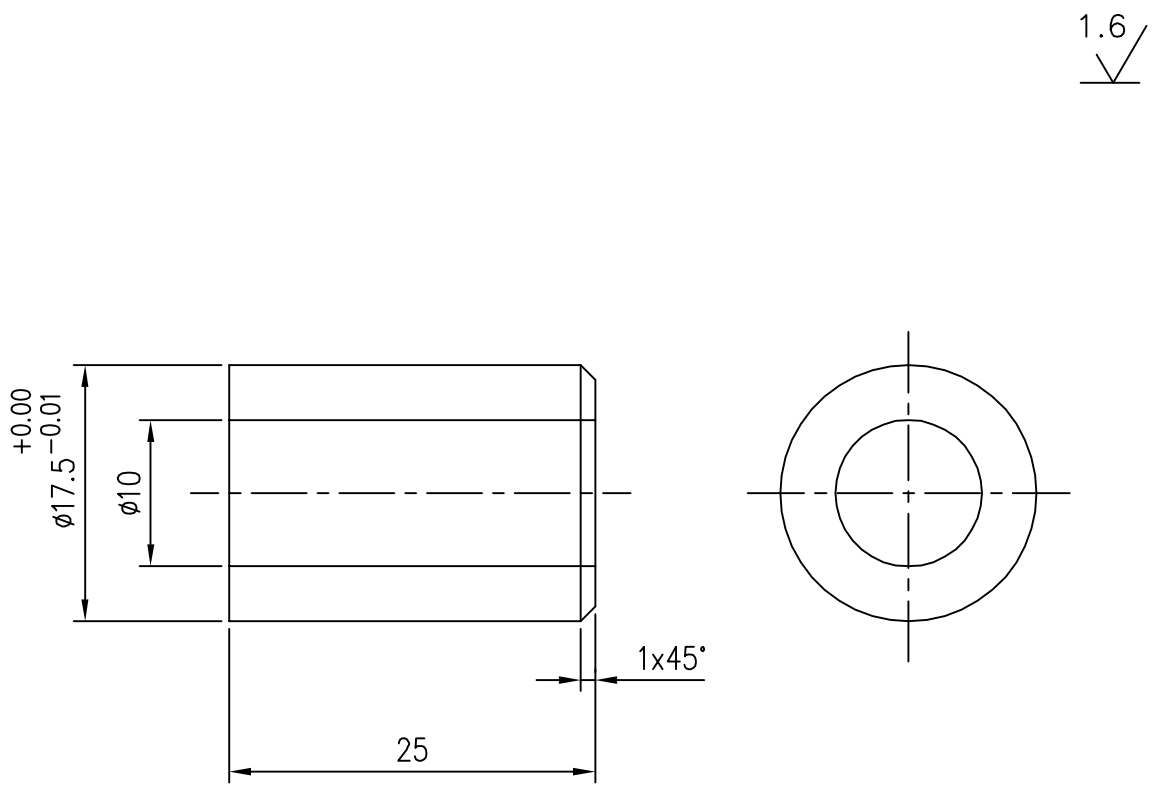

		BUSH CASTING AA19936	BA9313603004	0.020	
			BRONZE	1	
DESCRIPTION & DRG. No.	VAR No.	RAW MATERIAL SIZE OR CASTING DRG.NO. OR FORGING DRG.NO.	MATL. CODE	NET.WT.	GROSS WT
			MATL. SPECN.	QTY.	

TYPE OF PRODUCT OR
NAME OF CUSTOMER/PROJECT

BHARAT HEAVY ELECTRICALS LTD.
HYDERABAD

	NAME	SIGN	DATE
DRN.	N.D.S		8.10.98
CKD.	S.G		8.10.98
APPD.	K.M.RAO		8.10.98

NO.OF VAR. –

DEPT.	GRADE OF TOL. DIM.		SCALE	WEIGHT(K.G.)	REF.TO ASSY.DRG.	ITEM No.	No.OF ITEM
PULV. ENGG.	¢/M/f		2:1	0.02	3-61-370-00847	–	–
CODE 446							

REF. TO HY0230261 FOR UNSPECIFIED TOLERANCES.

TITLE

BUSH

DRAWING No. 4-61-370-90130

REV. 01

SHT. No. 1 | No. OF SHT. 1

COMPUTER No. 4619013O.DWG

REF. DRG. No.

SIGN. & DATE

INVENTORY NO.

THE INFORMATION ON THIS DOCUMENT IS THE PROPERTY OF BHARAT HEAVY ELECTRICALS LIMITED.
IT MUST NOT BE USED DIRECTLY OR INDIRECTLY IN ANY WAY DETRIMENTAL TO THE INTEREST OF THE COMPANY.

01	6-5-76	VNV
	MATERIAL SIZE CHANGED BNCA-5 HAS BNCA-4	

12,5 / 1,6

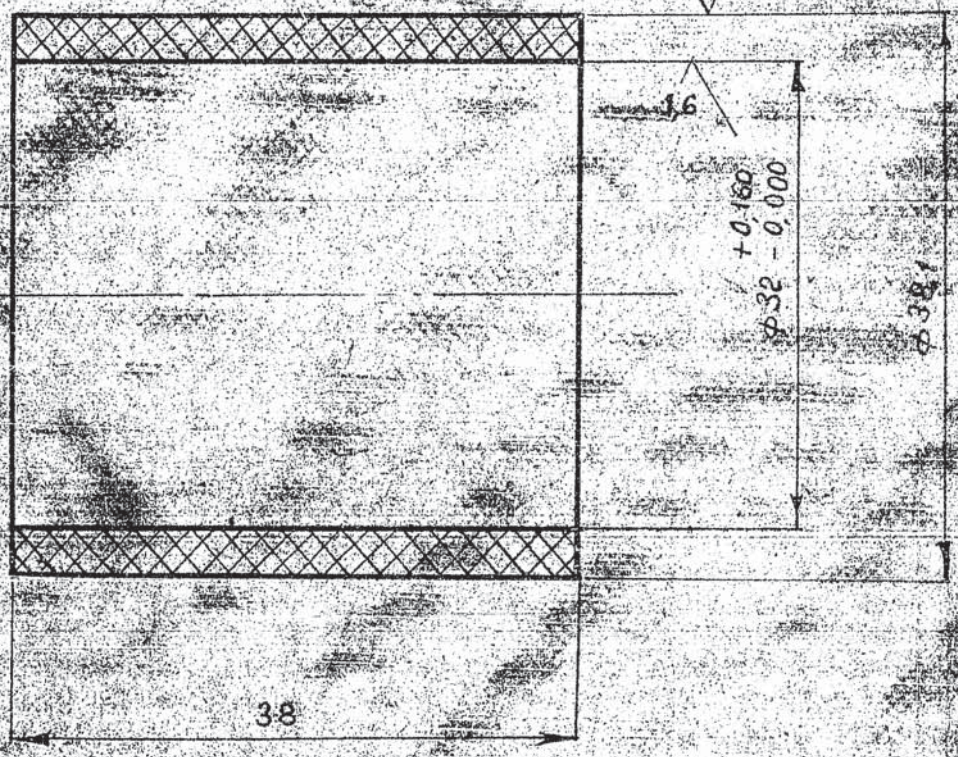

GENERAL DIMENSIONS, LIMITS, FITS & TOLERANCES AS PER PS. HY 23402BV

00490 411

MATERIAL : AL BRONZE – BNCA-4

					16-013-134				0 30			ROD D40×33
					BNCA-5							
STYLE ND	ITEM NO	BPS	REF DRG / BPS NO	RVN 32 STL	34 MATERIAL CODE	56 A/C	57 COMP GROUP	63 UNIT WT [KG]	75	76	DESCRIPTION	
					49 MATERIAL SPECN			70 NO OFF			REMARKS	

REMARKS | TOTAL NET wt (kg) | D3

SCALE	DRAWN		ALTERATIONS	DATE	SIGNATURE	ALTERATION INDEX
2:1	CHECKED					
	APPROVED	B.S.R				
	STDS. OFFICER		TRANS. COPY NO.			

TYPE: | GROUP: | OLD DRG. 40-E-014-036 NEW DRG.

TITLE: | DRAWING NO.

TIRUCHY

BUSH ϕ 38,1/ϕ32

4-65-155-00056/01

FIRST ANGLE PROJECTION

ALL DIMENSIONS ARE IN mm.

REV.	DATE	ALTERED	REV.	DATE	ALTERED	REV.	DATE	ALTERED
		CHECKED			CHECKED			CHECKED
		APPROVED			APPROVED			APPROVED

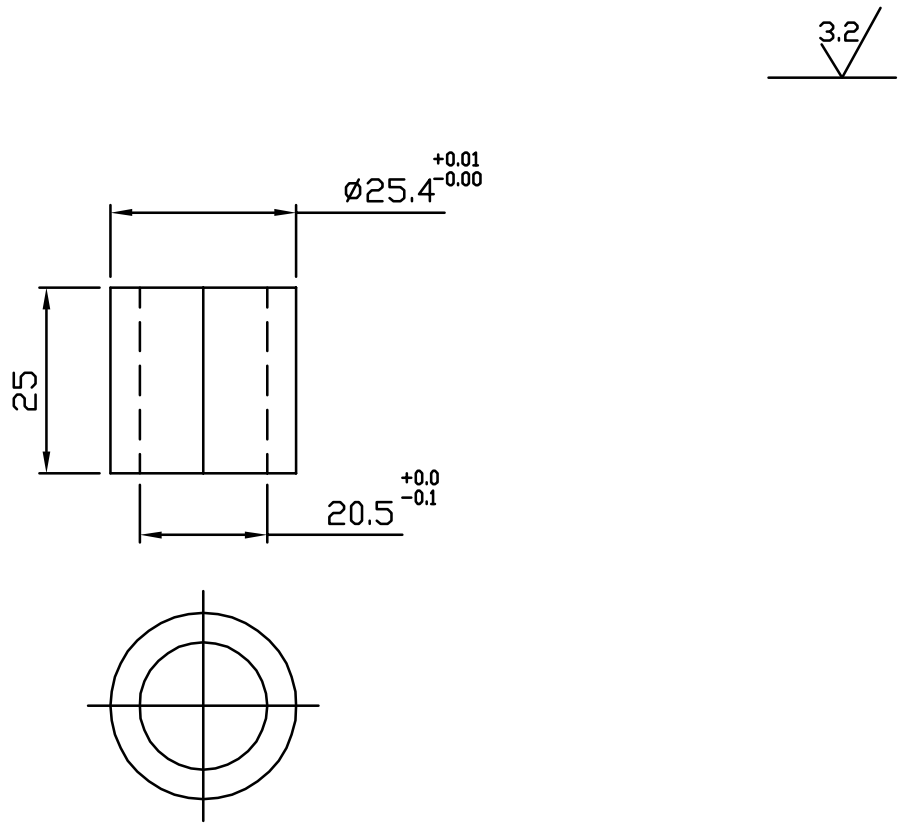

REMOVE ALL SHARP EDGES

ROD		ø 30X30	ST9313650002	0.4	
			AA19942		
DESCRIPTION & DRG.NO.	VAR NO.	RAW MATERIAL SIZE OR CASTING DRG.NO. OR FORGING DRG.NO.	MATL. CODE	NET.WT.	GROSS WT
			MATL. SPECN.	QTY.	

TYPE OF PRODUCT OR
NAME OF CUSTOMER/PROJECT

	NAME	SIGN	DATE	
DRN.	PKP		23.07.09	NO.OF VAR.
CKD.	CKP		24.07.09	
APPD.	V.KUMAR		25.07.09	

BHARAT HEAVY ELECTRICALS LTD.
HYDERABAD

DEPT. PULV. ENGG		SCALE	WEIGHT(K.G.)	REF.TO ASSY.DRG.	ITEM NO.	NO.OF ITEM
CODE 446		1:1	0.4			

TITLE
SPRING ROD BUSHING

DRAWING NO.
4-65-160-00017

REV. 00

SHT.NO. 1 NO.OF SHT. 1

REF. TO HY0230261 FOR UNSPECIFIED TOLERANCES.

THE INFORMATION ON THIS DOCUMENT IS THE PROPERTY OF BHARAT HEAVY ELECTRICALS LIMITED.
IT MUST NOT BE USED DIRECTLY OR INDIRECTLY IN ANY WAY DETRIMENTAL TO THE INTEREST OF THE COMPANY.

COMPUTER NO. 46500017

REF. DRG. NO.

SIGN. & DATE

INVENTORY NO.

	CORPORATE PURCHASING SPECIFICATION	AA 199 34
		Rev. No. 03
		PREFACE SHEET

ALUMINIUM BRONZE SAND CASTINGS Fr. AB-1

FOR INTERNAL USE ONLY
REMOVE THIS PREFACE BEFORE ISSUE TO SUPPLIERS

Comparable Standards:

1. INDIAN	:	IS : 305 – 1981 Gr. AB1
2. AMERICAN	:	ASTM B 148 : 1992 : Gr : alloy C 95200
3. BRITISH	:	BS:1400
4. GERMAN	:	DIN 1714 : 1981 Gr : Cu Al 10 Fe

Suggested/Probable Suppliers and Grades:

Refer plant vendors list.

User Plant References:

1. BHOPAL	: PS 12068
2. HARDWAR	: 0642.650 & 0502.701
3. HYDERABAD	: HY 021 02 99
4. TIRUCHY	: BNCA - 4

COPYRIGHT AND CONFIDENTIAL
The Information on this document is the property of BHARAT HEAVY ELECTRICALS LIMITED
It must not be used directly or Indirectly in any way detrimental to the Interest of the company.

Revisions : Cl: 20.10.33 of MOM of MRC-NFCW+HE			APPROVED : INTERPLANT MATERIAL RATIONALISATION COMMITTEE-MRC (NFCW+HE)		
Rev. No. 03	Amd.No.	Reaffirmed	Prepared	Issued	Dt. of 1st Issue
Dt: 15-02-06	Dt :	Year :	HYDERABAD	Corp. R&D	01-10-77

ALUMINIUM BRONZE SAND CASTINGS Fr. AB-1

1.0 GENERAL:

This specification governs the requirements of Aluminum Bronze Sand Castings of Grade AB – 1.

2.0 APPLICATION:

Suitable for engineering applications where resistance to wear, oxidation and corrosion are required.

3.0 CONDITION OF DELIVERY: As specified in the order/drawing.

4.0 COMPLIANCE WITH NATIONAL STANDARDS:

The material shall comply with the requirements of the following national standards and also meet the requirements of this specification.

IS: 305 – 1981, Gr: AB1 : " Aluminum bronze ingots and castings"

5.0 DIMENSIONS AND TOLERANCES:

The dimensions of the castings shall be in accordance with the drawing supplied with the order. For unmachined surfaces, unless otherwise specified in the order, the tolerances on linear dimensions and wall thickness shall be as per BHEL Standard AA 023 04 02.

6.0 MANUFACTURE: Sand casting.

7.0 FINISH : All castings shall be properly fettled and dressed and shall be thoroughly cleaned.

8.0 FREEDOM FROM DEFECTS :

The castings shall be free from defects, such as blow holes, inclusions, shrinkage, cavities, hard spots, cold shuts cracks etc, which may adversely affect the machining and utility of the castings. When it is necessary to remove the risers by flame cutting, care shall be taken to make the cut at sufficient distance from the body of the casting so as to prevent any defect being introduced into the casting due to local heating.

9.0 CHEMICAL COMPOSITION :

The chemical composition of the material when analyzed in accordance with IS : 4027 (Methods for chemical analysis of Bronzes) or any other conventional /instrumental methods shall be as follows :

Element	Percent	
	Min	Max.
Aluminum	8.5	10.5
Iron	1.5	3.5
Manganese*	--	1.0
Nickel*	--	1.0
Zinc	--	0.5
Tin *	--	0.10
Lead*	--	0.05
Silicon*	--	0.25
Magnesium*	--	0.05
Total (Sn+Pb+Si+Mg)*	--	0.30
Copper	Remainder	

*Note: These elements need not be determined when the material supplied conforms to the mechanical properties specified in the specification. However, the supplier shall ensure that the composition of the material lies within the limits specified above.

10.0 TEST SAMPLES:

The test samples shall be selected as follows :

Three tensile test specimens shall be poured from each heat/lot. A lot will consist of 450 kg of castings or part thereof. If individual castings weigh more than 450kg. Each casting will constitute a lot by itself.

If any tensile test specimen shows defects on machining or reveals casting defects, it shall be discarded and replaced by another specimen.

11.0 MECHANICAL PROPERTIES :

When tested in accordance with IS 1608, the material shall show the following properties:

Mode of Casting Test pieces	Ultimate tensile strength N/mm^2(min)	0.2% proof stress N/mm^2 (min.)	Elongation % min. on $5.65 \sqrt{S_o}$ Gauge length
Separately cast	500	170	18

12.0 OPTIONAL TEST:

If specified in the BHEL order/drawing, the following additional tests shall be conducted on the castings.

1) Pressure test
2) Radiographic test
3) Fracture test

12.1 FRACTURE TEST

One sample casting shall be broken in the presence of representative from BHEL in such a manner that the area of fracture is as large as practicable in determining the uniformity of the grain structure of the metal. If the fracture shows segregation or dross or drift spots or any other defects, all castings produced from the sand melt as that of the sample tested, shall be rejected.

13.0 RETESTS:

Should any of the test pieces first selected, fail to pass the prescribed tests mentioned under various clauses in this specification, two further samples from the same batch shall be selected for testing, one of which shall be from the same component from which the original test sample was taken, unless that component has been withdrawn by the supplier.

Should the test pieces from both these additional samples pass, the batch represented by the test sample shall be accepted. Should the test pieces from either of these additional samples fail, the batch represented by the test sample shall be rejected.

14.0 INSPECTION AT SUPPLIER'S WORKS

Tests and inspection are to be conducted in the prescience of the customer's representative. The representative shall have free access at all times while the work on the contract is being performed, to all parts of the manufacture's works. The supplier shall offer the purchaser's representative all reasonable facilities, without charge, to satisfy the latter that the material is being furnished in accordance with this specification. The supplier shall prepare and provide necessary test specimens for testing to be carried out at his premises. If facilities are not available at his works, the supplier shall make necessary arrangement for carrying out the prescribed test elsewhere.

15.0 REPAIR OF CASTINGS:

Castings shall not be required unless permission in writing has been obtained previously from BHEL.

16.0 TEST CERTIFICATES :

The supplier shall submit three copies of test certificates giving the following information.

In addition , the supplier shall ensure to send one copy of test certificate along with the despatch documents to facilitate quick clearance of the material.

The test certificate shall bear the following information:

BHEL Order No,
AA 19934, Rev.03 : Leaded Brass Hot pressings and Forgings.
Supplier's Reference and Name :
Heat No.
Results of chemical analysis, mechanical and all other tests called for in this specification/order.
Drawing/Pattern No.
Consignment/Identification No

17.0 PACKING AND MARKING:

Castings shall be suitably packed to prevent corrosion and damage during transit. Machined surfaces shall be properly protected with anti-corrosive compounds.

Each package or casting shall be legibly marked with the following information:

BHEL Order No,
AA 19934
Heat No.
specification/order.
Identification mark/No.
Weight
Supplier's Reference and Name :

18.0 REFERRED STADARDS (Latest Publications Including Amendments):

1. IS : 305 2. IS :1608 3. IS : 4027

PHOSPHOR BRONZE SAND, CHILL AND CENTRIFUGAL CASTINGS GR.2

1.0 GENERAL:

This specification governs the quality requirements of Phosphor Bronze Sand Chill and Centrifugal Castings.

2.0 APPLICATION: For heavy duty bearings, bushes, gears and worm wheels.

3.0 CONDITION OF DELIVERY:

Unless otherwise specified, castings shall be supplied sand cast. Static chill cast or centrifugal chill cast shall be supplied when specified on BHEL order/drawing. Centrifugal chill castings shall be supplied in the homogenized condition as specified in Clause 8.0 below.

Castings shall not be painted.

4.0 COMPLIANCE WITH NATIONAL STANDARDS:

The material shall comply with the requirements of the following national standard and also meet the requirements of this specification.

IS:28–1985, Gr.2: Phosphor bronze ingots and castings

5.0 DIMENSIONS AND TOLERANCES:

The castings shall be true to the pattern/drawing.

Holes for machining up-to and including 60 mm in diameter are to be cast solid, unless otherwise stated on BHEL order/drawing

Unless otherwise specified on BHEL order/drawing, un-toleranced dimensions for the castings shall be as per Tolerance class-4 of BHEL standard AA0230402.

6.0 FINISH:

All castings shall be properly fettled, dressed and all surfaces shall be thoroughly cleaned.

7.0 FREEDOM FROM DEFECTS:

Castings shall be free from defects such as porosity, blow holes, inclusions, shrinkage, cavities, hard spots, cold shuts, cracks, etc., which may adversely affect machining and utility of castings.

COPYRIGHT AND CONFIDENTIAL
The Information on this document is the property of BHARAT HEAVY ELECTRICALS LIMITED.
It must not be used directly or indirectly in any way detrimental to the Interest of the company.

8.0 HEAT TREATMENT

Centrifugal chill castings shall be supplied in homogenised condition. Homogenisation shall be done at 550°C for about 2 hours.

9.0 CHEMICAL COMPOSITION:

The chemical composition of the material, when analysed in accordance with IS:4027 (Methods of chemical analysis for Bronzes) or by any other conventional / instrumental methods shall be as specified below:

Element	Percent	
	Minimum	Maximum
Tin	10.00	-
Phosphorus	0.50	-
*Lead	-	0.25
*Zinc	-	0.05
*Silicon	-	0.02
*Iron	-	0.10
*Aluminium	-	0.01
*Nickel	-	0.10
Total impurities	-	0.60
Copper	Remainder	

***Note:** *These elements need not be determined when the material supplied conforms with the mechanical properties specified in this specification. However, the supplier shall ensure that the composition of the material lies within the limits specified above.*

10.0 TEST SAMPLES:

10.1. FOR SAND AND STATIC CHILL CASTINGS:

Each heat shall be analysed for chemical composition.
Three tensile test specimens shall be poured from each heat/lot.
If any tensile test specimen shows defects on machining or reveals casting defects, it shall be discarded and replaced by another specimen.

10.2. FOR CENTRIFUGAL CHILL CASTINGS:

In the case of centrifugal chill castings, test samples requirements shall be mutually agreed upon between BHEL and the supplier.

11.0 MECHANICAL PROPERTIES:

The test samples, when tested in accordance with IS:1608 shall show the following properties:

Property	Sand Cast	Static Chill Cast	Centrifugal Chill Cast
Tensile Strength, N/mm^2 (Min)	220	310	360
% Elongation on 5.65 $\sqrt{S_0}$ Gauge length (Min)	3	2	7

12.0 FRACTURE TEST

One sample casting shall be broken in the presence of BHEL representative in such a manner that the area of the fracture is as large as practicable in order to determine the uniformity of grain structure of the metal. If the fracture shows segregation or dross or dirt spots or any other defect, all the castings produced from the same melt shall be rejected.

13.0 ADDITIONAL TESTS:

If specified on BHEL order/drawing, the following additional tests shall be conducted on the castings.

1) Pressure test
2) Radiographic test
3) Any other tests

Methods of testing and norms of acceptance shall be as prescribed on BHEL order/ drawing or mutually agreed upon.

14.0 RETEST:

Should any of the test pieces first selected, fail to pass the prescribed tests mentioned under various clauses in this specification, two further samples from the same batch shall be selected for testing, one of which shall be from the same casting from which the original test sample was taken, unless it has been withdrawn by the supplier.

Should the test pieces from both these additional samples pass, the batch represented by the test sample shall be accepted. Should the test pieces from either of these additional samples fail, the batch represented by the test sample shall be rejected.

15.0 INSPECTION AT SUPPLIER'S WORKS:

Whenever specified, tests and inspection are to be conducted in the presence of BHEL’s representative.

BHEL’s representative shall have free access at all times while the work on the contract is being performed, to all parts of the manufacturer's works. The manufacturer shall offer BHEL's representative all reasonable facilities without charge, to satisfy the latter that the material is being furnished in accordance with this specification. The manufacturer shall prepare and provide necessary test specimens for testing to be carried out at his premises. If facilities don’t exists at his works, the manufacturer shall make necessary arrangements for carrying out the prescribed tests elsewhere. The manufacturer shall notify BHEL's representative in advance about the readiness of the material for inspection and testing.

BHEL reserves the right to test the material at BHEL's works and the final acceptance of the material shall be based on these test results.

16.0 REPAIR OF CASTINGS:

The castings shall not be repaired without prior permission of BHEL.

17.0 TEST CERTIFICATES:

Three copies of test certificates shall be supplied unless otherwise stated on BHEL order.

In addition, the supplier shall ensure to send one copy of test certificate along with the despatch documents to facilitate quick clearance of the material.

The test certificate shall bear the following information:
BHEL Order No.
AA19936, Rev.04: PHOSPHOR BRONZE SAND, CHILL AND CENTRIFUGAL CASTINGS GR.2
Supplier's reference and Name
Heat No.
Drawing/ Pattern No.
Method of Manufacture
Consignment/ Identification No
Dimensional inspection
Detail of heat treatment
Results of chemical, mechanical and other tests as called for in this specification.

18.0 PACKING AND MARKING

Castings shall be suitably packed to prevent corrosion and damage during transit.

Each package or casting (when supplied separately) shall be legibly marked with the following information:
AA19936
BHEL Order No.
Consignment/Identification No.
Heat No.
Weight
Supplier's reference and Name

19.0 REFERRED STANDARDS (Latest Publications including Amendments)

1) AA0230402 2) IS:4027 3) IS:1608

LEADED TIN BRONZE SAND CASTINGS CLASS-IV

1.0 GENERAL:

This specification governs the requirements of Leaded Tin Bronze Sand Castings.

2.0 APPLICATION:

Traction motor suspension bearings, Hydro turbines, Bowl mills and oilrigs.

3.0 CONDITION OF DELIVERY: As cast. Castings shall not be painted.

4.0 COMPLIANCE WITH NATIONAL STANDARDS:

The material shall comply with the requirements of the following national standard and also meet the requirements of this specification.

IS:1458–1965, Class IV : Rai1way Bronze ingots and Castings

5.0 DIMENSIONS AND TOLERANCES:

The dimensions of the castings shall be in accordance with the drawing supplied with the order. For un-machined surfaces, unless otherwise specified in the order, the tolerance on linear dimensions and wall thickness shall be as per BHEL Standard AA0230402.

6.0 MANUFACTURE: Sand cast.

7.0 FINISH:

All castings shall be properly fettled, dressed and thoroughly cleaned.

8.0 FREEDOM FROM DEFECTS:

The castings shall be free from defects such as blow holes, inclusions, shrinkage cavities, hard spots, cold shuts, cracks, gross porosity and drosses etc., which may adversely affect the machining and utility of the castings.

9.0 CHEMICAL COMPOSITION:

The chemical composition of the material when analysed in accordance with methods described in IS:4027 (Methods of chemical analysis of Bronzes) or any other conventional/ instrumental methods shall be as follows:

COPYRIGHT AND CONFIDENTIAL
The Information on this document is the property of BHARAT HEAVY ELECTRICALS LIMITED.
It must not be used directly or indirectly in any way detrimental to the Interest of the company.

Element	Percent	
	Minimum	Maximum
Tin	6.0	8.0
Lead	9.0	11.0
*Zinc	-	0.5
Phosphorus	-	0.05
Iron	-	0.3
Antimony	-	0.4
Iron and Antimony	-	0.5
*Aluminium	-	0.01
Total of other elements including Iron and Antimony	-	0.7
Copper plus incidental Nickel	Remainder	

***Note:** *These elements need not be determined when the material supplied conforms with the mechanical properties specified in this specification. However, the supplier shall ensure that the composition of the material lies within the limits specified above.*

10.0 TEST SAMPLES:

Each heat shall be analysed for chemical composition.

Three tensile test specimens shall be poured from each heat/lot.

If any tensile test specimen shows defects on machining or reveals casting defects, it shall be discarded and replaced by another specimen.

Each casting shall be tested for hardness.

11.0 MECHANICAL PROPERTIES:

11.1. When tested in accordance with IS:1608/ ISO:6892 (Metallic Materials - Tensile Testing at Ambient Temperature), the material shall show the following tensile properties:

Mode of Casting Test Pieces	Tensile Strength, N/mm^2 (Min)	%Elongation on 5.65 $\sqrt{S_0}$ (Min)
Cast on or Integrally Cast	157	2
Separately Cast	176	4

11.2. HARDNESS

Cast-on : 50 HB Min.

Separately cast : 55 HB Min.

12.0 ADDITIONAL TESTS:

If specified in the Purchase Order/ Drawing, the following additional tests shall be conducted on the castings.

1. Pressure Test.
2. Radiographic Test.

The requirements of these tests shall be as prescribed in the Order/drawing, or as mutually agreed.

13.0 REPAIR OF CASTINGS:

Repair of castings shall not be carried out by the supplier without the prior permission of BHEL.

14.0 TEST CERTIFICATES:

Three copies of test certificates shall be supplied unless otherwise stated on the order.

In addition, the supplier shall ensure to enclose one copy each of the test certificates along with the despatch documents to facilitate quick clearance of the material.

AA19939, Rev No.02: LEADED TIN BRONZE SAND CASTINGS CLASS-IV

BHEL Order No

Supplier's reference and Name

Heat No.

Drawing/ Pattern No.

Consignment/ Identification No.

Results of chemical analysis, mechanical and all other tests as called for in this specification/order.

15.0 PACKING AND MARKING

Castings shall be suitably packed to prevent corrosion and damage during transit. Machined surfaces shall be properly protected with anticorrosive compounds.

Each package or casting shall be legibly marked with the following information:

1) BHEL Order No.
2) AA19939
3) Heat No.
4) Identification Mark/No.
5) Weight
6) Supplier's reference and Name

16.0 REFERRED STANDARDS (Latest Publications including Amendments)

1) AA0230402 2) IS:4027 3) IS:1608/ ISO:6892

	CORPORATE PURCHASING SPECIFICATION	AA 199 42
		Rev. No. 02
		PREFACE SHEET

LEADED TIN BRONZE SAND AND CHILL CASTINGS – (Gr.LTB 1)

FOR INTERNAL USE ONLY
REMOVE THIS PREFACE BEFORE ISSUE TO SUPPLIERS

Comparable Standards:

1. INDIAN : IS : 318 – 1981 Grade-LTB - 1
2. AMERICAN : ASTM : B584-93, Alloy No C92200
   ASTM : B61 – 1983, Alloy No C92200

Suggested/Probable Suppliers and Grades:

Refer plant vendors list.

User Plant References:

1. BHOPAL : PS 12058
2. HYDERABAD : CSN : 423137.00

COPYRIGHT AND CONFIDENTIAL
The Information on this document is the property of BHARAT HEAVY ELECTRICALS LIMITED
It must not be used directly or Indirectly in any way detrimental to the Interest of the company.

Revisions : Cl: 20.10.36 of MOM of MRC-NFCW+HE			APPROVED : INTERPLANT MATERIAL RATIONALISATION COMMITTEE-MRC (NFCW+HE)		
Rev. No. 02	Amd.No.	Reaffirmed	Prepared	Issued	Dt. of 1st Issue
Dt:15.02.2006	Dt :	Year :	HARDWAR	Corp. R&D	April, 1978

LEADED TIN BRONZE SAND AND CHILL CASTINGS – (Gr.LTB 1)

1.0 GENERAL:

This specification governs the requirements of leaded tin bronze sand and chill castings.

2.0 APPLICATION:

Transformers, Switchgear, Steam turbine, Turbogenerator and other components.

3.0 CONDITION OF DELIVERY: As cast or as specified in order. Casting shall not be painted.

4.0 COMPLIANCE WITH NATIONAL STANDARDS:

IS : 318 – 1981 : Specification for Leaded Tin Bronze Ingots and Castings.
Grade : LTB I

5.0 DIMENSIONS AND TOLERANCES:

The dimensions of castings shall be in accordance with the drawings supplied with the order. All the surfaces marked for machining shall have sufficient machining allowance but it shall not be too excessive resulting in more machining. For un-machined surfaces, unless otherwise specified in the order, the tolerances on linear dimensions and wall thickness shall be as per BHEL standard AA 023 04 02.

6.0 MANUFACTURE :

Sand or chill cast as specified in the order/drawing.

7.0 FINISH :

All castings shall be properly fettled, dressed and cleaned.

8.0 FREEDOM FROM DEFECTS :

The castings shall be free from defects, such as blow holes, inclusions, shrinkage, cavities, hard spots, cold shuts cracks etc, which may adversely affects the machining and utility of the castings.

9.0 CHEMICAL COMPOSITION :

The chemical composition of the material, when analyzed in accordance with IS : 4027 (Methods for chemical analysis of Bronzes) or any other conventional/ instrumental methods shall be as follows :

Element	Percent	
	Min	Max.
Tin	6.0	8.0
*Zinc	1.5	3.0
Lead	2.5	3.5
**Antimony	-	0.3
Nickel	-	2.0
**Iron	-	0.3
**Aluminum	-	0.01
**Silicon	-	0.01
Total of all impurities excluding Nickel	-	0.70
Copper	Remainder	

* It shall be permissible to supply castings containing Zinc upto 0.25 percent more than the maximum specified in the table above.

** The chemical analysis for these need not be done provided the supplier undertakes and certifies that the material does not contain these impurities in excess of the limits stated in the table.

10.0 TEST SAMPLES:

i) Test sample shall be separately cast.
ii) One sample per has shall be selected for list.

11.0 MECHANICAL PROPERTIES :

When tested in accordance with IS 1608, the material shall show the following tensile properties :

Methods of Casting	Tensile strength MPa. Min	0.2% proof stress MPa. Min	%Elongation on 5.65√So Min.
Sand Cast (Separately Cast)	250	130	16
Chill Cast	250	130	5

12.0 OPTIONAL TEST:

If specified in the purchase Order/drawing the following additional tests shall be conducted on the castings.

1. Pressure Test.
2. Radiographic Test.

The requirements of these tests shall be as prescribed in the order/drawing or as mutually agreed.

13.0 RETESTS:

For chemical analysis and tensile strength test, if the test results fail to satisfy the requirements for any of the characteristics, two more tests for that characteristics shall be done on the same sample in order to confirm the test results satisfy the relevant requirements given in Clauses 9 & 10, the lot shall be considered as conforming to the requirements of this specification; otherwise not.

14.0 REPAIR OF CASTINGS:

The castings shall not be repaired unless permission in writing has been obtained previously from BHEL.

15.0 TEST CERTIFICATES :

Three copies of test certificates shall be supplied unless otherwise stated in the order.

In addition, the supplier shall ensure to enclose one copycat of the test certificates along with the dispatch documents to facilitate quick clearance of the material.
The test certificate shall bear the following information.

BHEL Order No,

AA 19942 , Rev.02 : Tin Broneze Sand & Chill Casting (Gr-LTB 1)

Supplier's Reference and Name :
Heat No.
Results of chemical analysis, mechanical and all other tests called for in this specification/order.
Consignment/Identification No
Drawing/Pattern No.

16.0 PACKING AND MARKING:

Castings shall be suitably packed to prevent corrosion and damage during transit. Machined surfaces shall be properly protected with anti-corrosive compounds.
Each package or casting shall be legibly marked with the following information:
BHEL Order No,

AA 19942

Heat No.
Identification mark /No.
Weight
Supplier's Reference and Name :

17.0 REFERRED STADARDS (Latest Publications Including Amendments):

1. IS : 318 2. IS : 1608 3. IS:4027 4. AA 023 04 02

FIRST ANGLE PROJECTION

(ALL DIMENSIONS ARE IN mm)

DRG.NO. HY–146.00

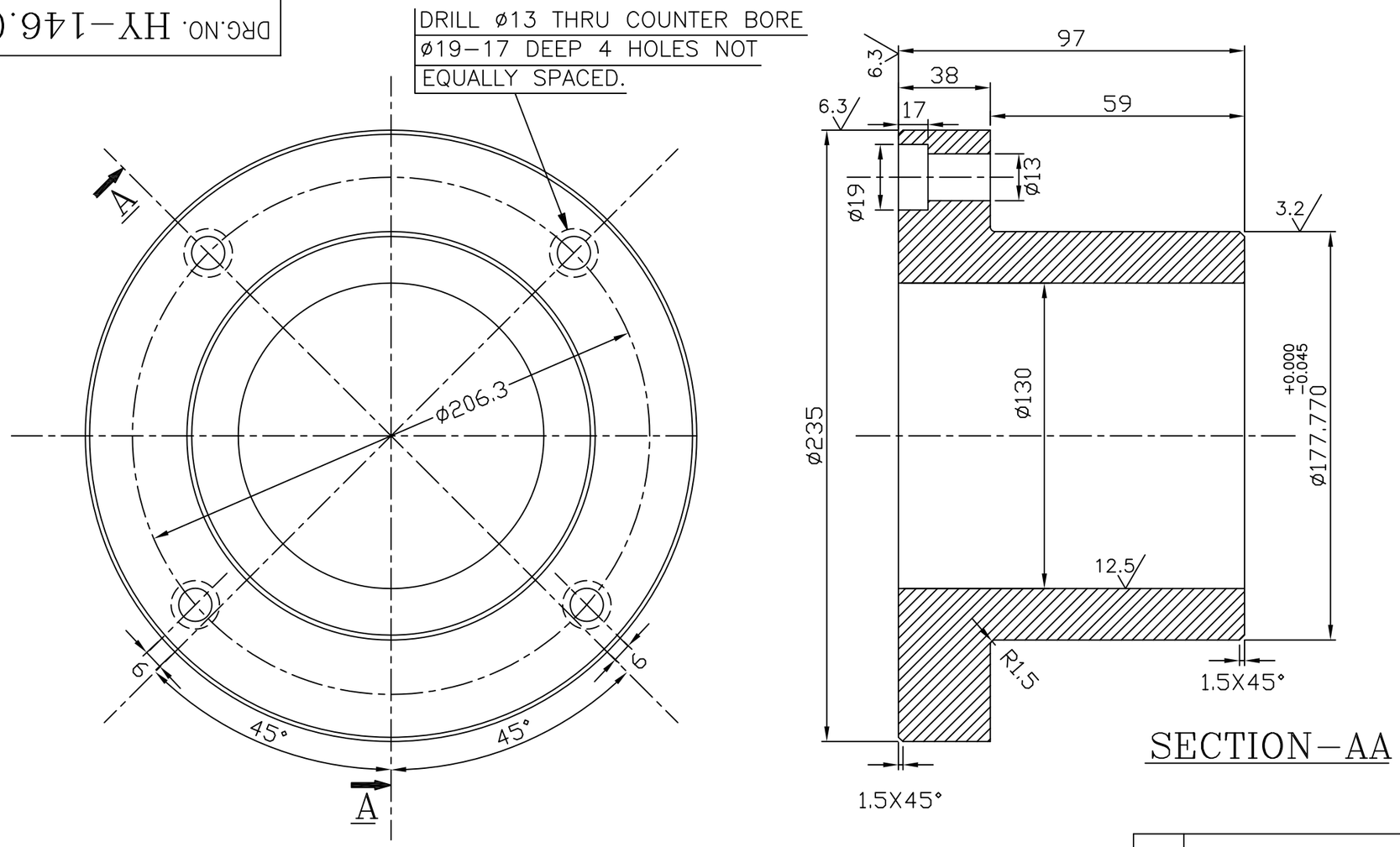

SECTION–AA

NOTES:–

01. BREAK ALL SHARP EDGES AND CORNERS UNLESS OTHERWISE SPECIFIED.

ITEM NO	DESCRIPTION			
	CASTING	BA9313903032	12.5	
		AA19939	1	
		MATERIAL CODE	NET WT.	GROSS WT.
		MATERIAL SPECN.	QUANTITY	

THE FOLLOWING CONDITIONS APPLY EXCEPT OTHERWISE STATED...

1. REF.TO HY0230261 FOR UNSPECIFIED TOLERANCES.
2. CHAMFER M/CD SHARP EDGES 1.2 TO 1.0 AT 45°.
3. INTERNAL M/CD CORNER RADII 1 TO 0.7.
4. THE SURFACE ROUGHNESS WHEREVER NOT SHOWN SHALL BE TAKEN FROM THE SURFACE ROUGHNESS SHOWN OUT SIDE BACK SLASHES GIVEN AT THE TOP MOST RIGHT CORNER OF THE DRG.

REV.	DATE	ALTERED		REV.	DATE	ALTERED	
		CHD.	APPD.			CHD.	APPD.
ZONE				ZONE			

TYPE OF PRODUCT OR NAME OF CUSTOMER/PROJECT: 803 XRP BOWL MILL

BHARAT HEAVY ELECTRICALS LTD. VARANASI

	NAME	SIGN.	DATE	NO.OF VAR.
DRN.	PKP		25.11.13	
CHD.	CKP		25.11.13	
APPD.	V. KUMAR		25.11.13	

DEPT.	CODE	SCALE	WEIGHT (KG)	REF. TO ASSY DRG.	ITEM NO.	NO.OF ITEMS
P&D ENGG	––	NTS	12.5	3–61–376–00077	–	*

TITLE: SPRING ADJUSTING BOLT BUSHING

DRAWING NO. HY–146.00 REV. 00

SHEET NO. 01 NO OF SHEETS 01

TD–151/REV. 03 SIZE A3

THE INFORMATION ON THIS DOCUMENT IS THE PROPERTY OF BHARAT HEAVY ELECTRICALS LTD.
IT MUST NOT BE USED DIRECTLY OR INDIRECTLY IN ANY WAY DETRIMENTAL TO THE INTEREST OF THE COMPANY.

FILE NAME: HY–146.00.DWG

REF.DRG.NO.

INVENTORY NO.

BHEL-HERP,VARANASI

QUALITY PLAN

FULLY M/CD

BRONZE ITEMS

Sl.No.	Component/ Operation	Characteristic Checked	Type/Method of Check	Extent of Check	Reference Documents	Acceptance Norm	Format of Record	Agency P	Agency W	Agency V	Remarks
1.0	Raw Matl.	i. Composition	Chemical Analysis	1 Sample per melt.	As per Specn.	As per Specn.	T.C.	3	-	2	
		ii. Mechanical Properties	Mechanical Test	-do-	-do-	-do-	T.C.	3	-	2	
		iii. Surface Defects	visual	100%	Defect Free	Defect Free	I.R.	3	2	-	
		iv. Dimensions	Measurement	100%by Vend.	Drawing	Drawing	D.R.	3	-	2	
2.0	Final Inspection	i. Dimensions	Measurement	100%by Vend. Random 10% by BHEL	Drawing	Drawing	D.R.	3/2	-	2	
		II. Cleanliness	Visual	100%	----	----	I.R.	3	2	-	
		Iii. Identification & Marking	Punching Heat,PO No., Drg.No. & Inspector seal	100%	----	----	I.R.	3	2	-	
		IV. Prevention (from rust)	Visual	100%	----	----	I.R.	3	2	-	

Q.P.No.	RV/C&F/19 Rev.02	Approved by	C.K.P.	Legend	P=Perform	TC=Test Certificate
Date	10/06/2020	Signature & Date			W=Witness	HT=Heat Tratment
Page No.	1 of 1	BHEL			V=Verify	DR=Dimension Report
					2=BHEL	IR=Inspection Report
					3=Vendor/Supplier	

10/06/2020
C.K. Prajapati
Manager

चंद्र केतु प्रजापति/Chandra Ketu Prajapati
प्रबन्धक / Manager
बी.एच.ई.एल., हर्प, वाराणसी
BHEL, HERP, VARANASI

FIRST ANGLE PROJECTION

(ALL DIMENSIONS ARE IN mm)

DRG.NO. XX-053.07

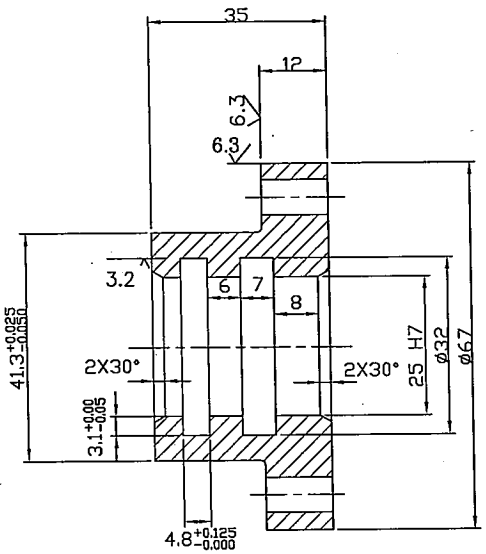

SECTION A-A

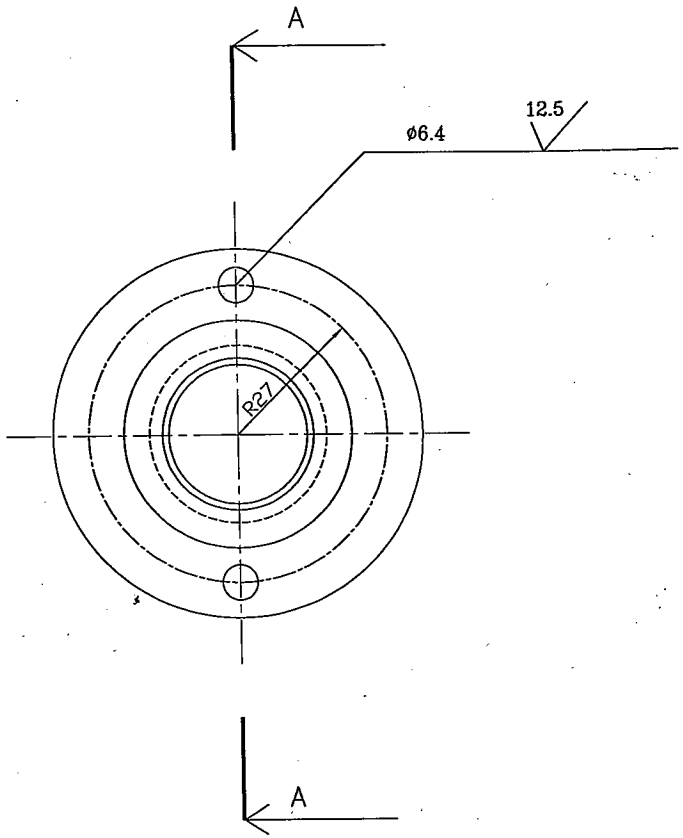

OLD PATTERN NO. 30-F-002-124

NEW PATTERN NO-03-61-576-00098

BHEL HYD-PATTERN NO. M-67-325

ø25	H7	+0.021	-0.000
NOMINAL DIAMENSION	TOLERENCE SYMBOL	UPPER	LOWER
		TOLERENCE	

ITEM NO.	DESCRIPTION	DRAWING NO.	MATERIAL SPECN. / MATERIAL CODE	UNIT WT.(KG) / QTY
01	PACKING GLAND (BRONZE)		9672022510	0.44
			B.144 LR.GR3A	1

TYPE OF PRODUCT OR NAME OF CUSTOMER/PROJECT: 76" BOWL MILL

BHARAT HEAVY ELECTRICALS LTD. VARANASI

	NAME	SIGN.	DATE	NO.OF VAR.
DRN.			10.02.09	
CHD.			10.02.09	
APPD.			10.02.09	

DEPT. PULV ENGG.

CODE 446

SCALE

WEIGHT (KG)

REF. TO ASSY DRG. 16157600028

ITEM NO.

NO.OF ITEMS

TITLE: PACKING GLAND

DRAWING NO. xx-053.07

REV. 00

SHEET NO. 01 NO OF SHEETS 01

TD-151/REV. 03 SIZE A3

THE INFORMATION ON THIS DOCUMENT IS THE PROPERTY OF BHARAT HEAVY ELECTRICALS LTD. IT MUST NOT BE USED DIRECTLY OR INDIRECTLY IN ANY WAY DETRIMENTAL TO THE INTEREST OF THE COMPANY.

FILE NAME: 36100284.DWG

REF.DRG.NO.

INVENTORY NO.

MASTER COPY

Annexure-1

INTEGRITY PACT

Between

Bharat Heavy Electricals Ltd. (BHEL), a company registered under the Companies Act 1956 and having its registered office at "BHEL House", Siri Fort, New Delhi - 110049 (India) hereinafter referred to as "The Principal", which expression unless repugnant to the context or meaning hereof shall include its successors or assigns of the ONE PART

and

_____, (description of the party along with address), hereinafter referred to as "The Bidder/ Contractor" which expression unless repugnant to the context or meaning hereof shall include its successors or assigns of the OTHER PART

Preamble

The Principal intends to award, under laid-down organizational procedures, contract/s for _____

_____
_____ (hereinafter referred to as "Contract"). The Principal values full compliance with all relevant laws of the land, rules and regulations, and the principles of economic use of resources, and of fairness and transparency in its relations with its Bidder(s)/ Contractor(s).

In order to achieve these goals, the Principal will appoint panel of Independent External Monitor(s) (IEMs), who will monitor the tender process and the execution of the contract for compliance with the principles mentioned above.

Section 1- Commitments of the Principal

1.1 The Principal commits itself to take all measures necessary to prevent corruption and to observe the following principles: -

1.1.1 No employee of the Principal, personally or through family members, will in connection with the tender for, or the execution of a contract, demand, take a promise for or accept, for self or third person, any material or immaterial benefit which the person is not legally entitled to.

1.1.2 The Principal will, during the tender process treat all Bidder(s) with equity and reason. The Principal will in particular, before and during the tender process, provide to all Bidder(s) the same information and will not provide to any Bidder(s) confidential/ additional information through which the Bidder(s) could obtain an advantage in relation to the tender process or the contract execution.

1.1.3 The Principal will exclude from the process all known prejudiced persons.

1.2 If the Principal obtains information on the conduct of any of its employees which is a penal offence under the Indian Penal Code 1860 and Prevention of Corruption Act 1988 or any other statutory penal enactment, or if there be a substantive suspicion in this regard, the Principal will inform its Vigilance Office and in addition can initiate disciplinary actions.

Section 2 - Commitments of the Bidder(s)/ Contractor(s)

2.1 The Bidder(s)/ Contractor(s) commit himself to take all measures necessary to prevent corruption. The Bidder(s)/ Contractor(s) commits himself to observe the following principles during participation in the tender process and during the contract execution.

2.1.1 The Bidder(s)/ Contractor(s) will not, directly or through any other person or firm, offer, promise or give to the Principal or to any of the Principal's employees involved in the tender process or the execution of the contract or to any third person any material, immaterial or any other benefit which he/ she is not legally entitled to, in order to obtain in exchange any advantage of any kind whatsoever during the tender process or during the execution of the contract.

2.1.2 The Bidder(s)/ Contractor(s) will not enter with other Bidder(s) into any illegal or undisclosed agreement or understanding, whether formal or informal. This applies in particular to prices, specifications, certifications, subsidiary contracts, submission or non-submission of bids or any other actions to restrict competitiveness or to introduce cartelization in the bidding process.

2.1.3 The Bidder(s)/ Contractor(s) will not commit any penal offence under the relevant Indian Penal Code (IPC) and Prevention of Corruption Act; further the Bidder(s)/ Contractor(s) will not use improperly, for purposes of competition or personal gain, or pass on to others, any information or document provided by the Principal as part of the business relationship, regarding plans, technical proposals and business details, including information contained or transmitted electronically.

2.1.4 Foreign Bidder(s)/ Contractor(s) shall disclose the name and address of agents and representatives in India and Indian Bidder(s)/ Contractor(s) to disclose their foreign principals or associates. The Bidder(s)/ Contractor(s) will, when presenting his bid, disclose any and all payments he has made, and is committed to or intends to make to agents, brokers or any other intermediaries in connection with the award of the contract.

2.2 The Bidder(s)/ Contractor(s) will not instigate third persons to commit offences outlined above or be an accessory to such offences.

2.3 The Bidder(s)/ Contractor(s) shall not approach the Courts while representing the matters to IEMs and shall await their decision in the matter.

Section 3 - Disqualification from tender process and exclusion from future contracts

If the Bidder(s)/ Contractor(s), before award or during execution has committed a transgression through a violation of Section 2 above, or acts in any other manner such as to put his reliability or credibility in question, the Principal is entitled to disqualify the Bidder(s)/ Contractor(s) from the tender process , terminate the contract, if already awarded, exclude from future business dealings and/ or take action as per the separate "Guidelines on Banning of Business dealings with Suppliers/ Contractors", framed by the Principal.

Section 4 - **Compensation for Damages**

4.1 If the Principal has disqualified the Bidder (s) from the tender process before award / order acceptance according to Section 3, the Principal is entitled to demand and recover the damages equivalent to Earnest Money Deposit/ Bid Security.

4.2 If the Principal is entitled to terminate the Contract according to Section 3, or terminates the Contract in application of Section 3 above , the Bidder(s)/ Cotractor (s) transgression through a violation of Section 2 above shall be construed breach of contract and the Principal shall be-entitled to demand and recover from the Contractor an amount equal to 5% of the contract value or the amount equivalent to Security Deposit/ Performance Bank Guarantee , whichever is higher, as damages, in addition to and without prejudice to its right to demand and recover compensation for any other loss or damages specified elsewhere in the contract.

Section 5 - Previous Transgression

5.1 The Bidder declares that no previous transgressions occurred in the last 3 (three) years with any other company in any country conforming to the anti-corruption approach or with any other Public Sector Enterprise in India that could justify his exclusion from the tender process.

5.2 If the Bidder makes incorrect statement on this subject, he can be disqualified from the tender process or the contract, if already awarded, can be terminated for such reason or action can be taken as per the separate "Guidelines on Banning of Business dealings with Suppliers/ Contractors", framed by the Principal.

Section 6 - Equal treatment of all Bidder (s)/ Contractor (s) / Sub-contractor (s)

6.1 The Principal will enter into Integrity Pacts with identical conditions as this Integrity Pact with all Bidders and Contractors.

6.2 In case of Sub-contracting, the Principal Contractor shall take the responsibility of the adoption of Integrity Pact by the Sub-contractor(s) and ensure that all Sub-contractors also sign the Integrity Pact.

6.3 The Principal will disqualify from the tender process all Bidders who do not sign this Integrity Pact or violate its provisions.

Section 7 - Criminal Charges against violating Bidders/ Contractors /Subcontractors

If the Principal obtains knowledge of conduct of a Bidder, Contractor or Subcontractor, or of an employee or a representative or an associate of a Bidder, Contractor or Subcontractor which constitutes corruption, or if the Principal has substantive suspicion in this regard, the Principal will inform the Vigilance Office.

Section 8 -Independent External Monitor(s)

8.1 The Principal appoints competent and credible panel of Independent External Monitor (s) (IEMs) for this Integrity Pact. The task of the IEMs is to review independently and objectively, whether and to what extent the parties comply with the obligations under this Integrity Pact.

8.2 The IEMs are not subject to instructions by the representatives of the parties and performs his functions neutrally and independently. He reports to the CMD, BHEL.

8.3 The IEMs shall be provided access to all documents/ records pertaining to the Contract, for which a complaint or issue is raised before them as and when warranted. However, the documents/records/information having National Security implications and those documents which have been classified as Secret/Top Secret are not to be disclosed.

8.4 The Principal will provide to the IEMs sufficient information about all meetings among the parties related to the Contract provided such meetings could have an impact on the contractual relations between the Principal and the Contractor. The parties offer to the IEMs the option to participate in such meetings.

8.5 The advisory role of IEMs is envisaged as that of a friend, philosopher and guide. The advice of IEMs would not be legally binding and it is restricted to resolving issues raised by a Bidder regarding any aspect of the tender which allegedly restricts competition or bias towards some Bidders. At the same time, it must be understood that IEMs are not consultants to the Management. Their role is independent in nature and the advice once tendered would not be subject to review at the request of the organization.

8.6 For ensuring the desired transparency and objectivity in dealing with the complaints arising out of any tendering process or during execution of Contract, the matter should be examined by the full panel of IEMs jointly, who would look into the records, conduct an investigation, and submit their joint recommendations to the Management.

8.7 The IEMs would examine all complaints received by them and give their recommendations/ views to the CMD, BHEL at the earliest. They may also send their report directly to the CVO, in case of suspicion of serious irregularities requiring legal/ administrative action. Only in case of very serious issue having a specific, verifiable Vigilance angle, the matter should be reported directly to the Commission. IEMs will tender their advice on the complaints within 30 days.

8.8 The CMD, BHEL shall decide the compensation to be paid to the IEMs and its terms and conditions.

8.9 IEMs should examine the process integrity, they are not expected to concern themselves with fixing of responsibility of officers. Complaints alleging mala fide on the part of any officer of the Prinicpal should be looked into by the CVO of the Principal.

8.10 If the IEMs have reported to the CMD, BHEL, a substantiated suspicion of an offence under relevant Indian Penal Code / Prevention of Corruption Act, and the CMD, BHEL has not, within reasonable time, taken visible action to proceed against such offence or reported it to the Vigilance Office, the IEMs may also transmit this information directly to the Central Vigilance Commissioner, Government of India.

8.11 After award of work, the IEMs shall look into any issue relating to execution of Contract, if specifically raised before them. As an illustrative example, if a Contractor who has been awarded the Contract, during the execution of Contract, raises issue of delayed payment etc. before the IEMs, the same shall be examined by the panel of IEMs. Issues like warranty/ guarantee etc. shall be outside the purview of IEMs.

8.12 However, the IEMs may suggest systemic improvements to the management of the Principal, if considered necessary, to bring about transparency, equity and fairness in the system of procurement.

8.13 The word `Monitor' would include both singular and plural.

Section 9 - Pact Duration

9.1 This Integrity Pact shall be operative from the date this Integrity Pact is signed by both the parties till the final completion of contract for successful Bidder, and for all other Bidders 6 months after the Contract has been awarded. Any violation of the same would entail disqualification of the bidders and exclusion from future business dealings.

9.2 If any claim is made/ lodged during currency of this Integrity Pact, the same shall be binding and continue to be valid despite the lapse of this Pact as specified above, unless it is discharged/ determined by the CMD, BHEL.

Section 10 - Other Provisions

10.1 This Integrity Pact is subject to Indian Laws and exclusive jurisdiction shall be of the competent Courts as indicated in the Tender or Contract, as the case may be.

10.2 Changes and supplements as well as termination notices need to be made in writing.

10.3 If the Bidder(s)/ Contractor(s) is a partnership or a consortium or a joint venture, this Integrity Pact shall be signed by all partners of the partnership or joint venture or all consortium members.

10.4 Should one or several provisions of this Integrity Pact turn out to be invalid, the remainder of this Integrity Pact remains valid. In this case, the parties will strive to come to an agreement to their original intentions.

10.5 Only those bidders / contractors who have entered into this Integrity Pact with the Principal would be competent to participate in the bidding. In other words, entering into this Integrity Pact would be a preliminary qualification.

10.6 In the event of any dispute between the Principal and Bidder(s)/ Contractor(s) relating to the Contract, in case, both the parties are agreeable, they may try to settle dispute through Mediation before the panel of IEMs in a time bound manner. In case, the dispute remains unresolved even after mediation by the panel of IEMs, either party may take further action as the terms & conditions of the Contract. The fees/expenses on dispute resolution through mediation shall be shared by both the parties. Further, the mediation proceedings shall be confidential in nature and the parties shall keep confidential all matters relating to the mediation proceedings including any settlement agreement arrived at between the parties as outcome of mediation. Any views expressed, suggestions, admissions or proposals etc. made by either party in the course of mediation shall not be relied upon or introduced as evidence in any further arbitral or judicial proceedings, whether or not such proceedings relate to the dispute that is the subject of mediation proceedings. Neither of the parties shall present IEMs as witness in any Alternative Dispute Resolution or judicial proceedings in respect of the dispute that was subject of mediation.

---	---
For & On behalf of the Principal (Office Seal)	For & On behalf of the Bidder/ Contractor (Office Seal)
Place _____ Date _____	
Witness:_____ (Name & Address) _____ _____	Witness:_____ (Name & Address) _____ _____

Clause on IP in the tender

Integrity Pact (IP)

(a) IP is a tool to ensure that activities and transactions between the Company and its Bidders/ Contractors are handled in a fair, transparent and corruption free manner. Following Independent External Monitors (IEMs) on the present panel have been appointed by BHEL with the approval of CVC to oversee implementation of IP in BHEL.

Sl	IEM	Email
1.	Shri Otem Dai, IAS (Retd.)	iem1@bhel.in
2.	Shri Bishwamitra Pandey, IRAS (Retd.)	iem2@bhel.in
3.	Shri Mukesh Mittal, IRS (Retd.)	iem3@bhel.in

(b) The IP as enclosed with the tender is to be submitted (duly signed by authorized signatory) along with techno-commercial bid (Part-I, in case of two/ three part bid). Only those bidders who have entered into such an IP with BHEL would be competent to participate in the bidding. In other words, entering into this Pact would be a preliminary qualification.

(c) Please refer Section-8 of IP for Role and Responsibilities of IEMs. In case of any complaint arising out of the tendering process, the matter may be referred to any of the above IEM(s). All correspondence with the IEMs shall be done through email only.

Note:

No routine correspondence shall be addressed to the IEM (phone/ post/ email) regarding the clarifications, time extensions or any other administrative queries, etc on the tender issued. All such clarification/ issues shall be addressed directly to the tender issuing (procurement) department's officials whose contact details are provided below:

Details of contact person(s):

(1)
Name:_____
Deptt: _____
Address: _____
Phone: (Landline/ Mobile)
_____
Email: _____
Fax: _____

(2)
Name:_____
Deptt: _____
Address: _____
Phone: (Landline/ Mobile)
_____
Email: _____
Fax: _____

ANNEXURE D

BANK GUARANTEE FOR PERFORMANCE SECURITY

Bank Guarantee No:

Date:

To

NAME

& ADDRESSES OF THE BENEFICIARY

Dear Sirs,

In consideration of Bharat Heavy Electricals Limited (hereinafter referred to as the 'Employer' which expression shall unless repugnant to the context or meaning thereof, include its successors and permitted assigns) incorporated under the Companies Act, 1956 and having its registered office at _____[1] through its Unit at……..(name of the Unit) having awarded to (Name of the Vendor / Contractor / Supplier) with its registered office at_____[2] hereinafter referred to as the ' Vendor / Contractor / Supplier ', which expression shall unless repugnant to the context or meaning thereof, include its successors and permitted assigns), a contract Ref No……dated ……..[3] valued at Rs……[4] (Rupees ----------)/FC……(in words……..) for ……[5] (hereinafter called the 'Contract') and the Vendor / Contractor / Supplier having agreed to provide a Contract Performance Bank Guarantee, equivalent to ……% (…. Percent) of the said value of the Contract to the Employer for the faithful performance of the Contract,

we, ……, (hereinafter referred to as the Bank), having registered/Head office at …….. and inter alia a branch at …… being the Guarantor under this Guarantee, hereby, irrevocably and unconditionally undertake to forthwith and immediately pay to the Employer any sum or sums upto a maximum amount of Rs ---------- [6] (Rupees ----------) without any demur, immediately on first demand from the Employer and without any reservation, protest, and recourse and without the Employer needing to prove or demonstrate reasons for its such demand.

Any such demand made on the Bank shall be conclusive as regards the amount due and payable by the Bank under this guarantee. However, our liability under this guarantee shall be restricted to an amount not exceeding Rs. _____.

We undertake to pay to the Employer any money so demanded notwithstanding any dispute or disputes raised by the Vendor / Contractor / Supplier in any suit or proceeding pending before any Court or Tribunal, Arbitrator or any other authority, our liability under this present being absolute and unequivocal.

The payment so made by us under this Guarantee shall be a valid discharge of our liability for payment thereunder and the Vendor / Contractor / Supplier shall have no claim against us for making such payment.

We the ……bank further agree that the guarantee herein contained shall remain in full force and effect during the period that would be taken for the performance of the said Contract/satisfactory completion of the performance guarantee period as per the terms of the Contract and that it shall continue to be enforceable till

all the dues of the Employer under or by virtue of the said Contract have been fully paid and its claims satisfied or discharged.

We ……..BANK further agree with the Employer that the Employer shall have the fullest liberty without our consent and without affecting in any manner our obligations hereunder to vary any of the terms and conditions of the said Contract or to extend time of performance by the said Vendor / Contractor / Supplier from time to time or to postpone for any time or from time to time any of the powers exercisable by the Employer against the said Vendor / Contractor / Supplier and to forbear or enforce any of the terms and conditions relating to the said Contract and we shall not be relieved from our liability by reason of any such variation, or extension being granted to the said Vendor / Contractor / Supplier or for any forbearance, act or omission on the part of the Employer or any indulgence by the Employer to the said Vendor / Contractor / Supplier or by any such matter or thing whatsoever which under the law relating to sureties would but for this provision have effect of so relieving us.

The Bank also agrees that the Employer at its option shall be entitled to enforce this Guarantee against the Bank as a principal debtor, in the first instance without proceeding against the Vendor / Contractor / Supplier and notwithstanding any security or other guarantee that the Employer may have in relation to the Vendor / Contractor / Supplier 's liabilities.

This Guarantee shall remain in force upto and including…….. [7] and shall be extended from time to time for such period as may be desired by Employer.

This Guarantee shall not be determined or affected by liquidation or winding up, dissolution or change of constitution or insolvency of the Vendor / Contractor / Supplier but shall in all respects and for all purposes be binding and operative until payment of all money payable to the Employer in terms thereof.

Unless a demand or claim under this guarantee is made on us in writing on or before the ……..[8]we shall be discharged from all liabilities under this guarantee thereafter.

We, …… BANK lastly undertake not to revoke this guarantee during its currency except with the previous consent of the Employer in writing.

Notwithstanding anything to the contrary contained hereinabove:

a) The liability of the Bank under this Guarantee shall not exceed…… [6]
b) This Guarantee shall be valid up to ……[7]
c) Unless the Bank is served a written claim or demand on or before _____[8] all rights under this guarantee shall be forfeited and the Bank shall be relieved and discharged from all liabilities under this guarantee irrespective of whether or not the original bank guarantee is returned to the Bank.

We, _____ Bank, have power to issue this Guarantee under law and the undersigned as a duly authorized person has full powers to sign this Guarantee on behalf of the Bank.

For and on behalf of
(Name of the Bank)

Dated…….

Place of Issue……..

[1] NAME AND ADDRESS OF EMPLOYER I.e Bharat Heavy Electricals Limited

[2] NAME AND ADDRESS OF THE VENDOR /CONTRACTOR / SUPPLIER.

[3] DETAILS ABOUT THE NOTICE OF AWARD/CONTRACT REFERENCE

[4] CONTRACT VALUE

[5] PROJECT/SUPPLY DETAILS
[6] BG AMOUNT IN FIGURES AND WORDS

[7] VALIDITY DATE

[8] DATE OF EXPIRY OF CLAIM PERIOD

Note:

1. Units are advised that expiry of claim period may be kept 3-6 months after validity date. It may be ensured that the same is in line with the agreement/ contract entered with the Vendor.

2. The BG should be on Non-Judicial Stamp paper/e-stamp paper of appropriate value as per Stamp Act prevailing in the State(s) where the BG is submitted or is to be acted upon or the rate prevailing in the State where the BG was executed, whichever is higher. The Stamp Paper/e-stamp paper shall be purchased in the name of Vendor/Contractor/Supplier /Bank issuing the guarantee.

3. In line with the GCC, SCC or contractual terms, Unit may carry out minor modifications in the Standard BG Formats. If required, such modifications may be carried out after taking up appropriately with the Unit/Region's Law Deptt.

4. **In Case of Bank Guarantees submitted by Foreign Vendors-**

   a. **From Nationalized/Public Sector / Private Sector/ Foreign Banks (BG issued by Branches in India)** can be accepted subject to the condition that the Bank Guarantee should be enforceable in the town/city or at nearest branch where the Unit is located i.e. Demand can be presented at the Branch located in the town/city or at nearest branch where the Unit is located.

   b. **From Foreign Banks (wherein Foreign Vendors intend to provide BG from local branch of the Vendor country's Bank)**

      b.1 In such cases, in the Tender Enquiry/ Contract itself, it may be clearly specified that Bank Guarantee issued by **any of the Consortium Banks only** will be accepted by BHEL. As such, Foreign Vendor needs to make necessary arrangements for issuance of Counter- Guarantee by Foreign Bank in favour of the Indian Bank's (BHEL's Consortium Bank) branch in India. It is advisable that all charges for issuance of Bank Guarantee/ counter- Guarantee should be borne by the Foreign Vendor. The tender stipulation should clearly specify these requirements.

      b.2 **In case, Foreign Vendors intend to provide BG from** Overseas Branch of our Consortium Bank (e.g. if a BG is to be issued by SBI Frankfurt), the same is acceptable. However, the procedure at **sl.no. b.1** will required to be followed.

      b.3 The BG issued may preferably be subject to Uniform Rules for Demand Guarantees (URDG) 758 (as amended from time to time). The BG Format provided to them should clearly specify the same.

Sl. No.	Name of the bank
1	State Bank of India
2	Canara Bank
3	IDBI Bank Limited
4	ICICI Bank Limited
5	HDFC Bank Limited
6	Axis Bank
7	IndusInd Bank Limited
8	Bank of Baroda
9	Exim Bank
10	Indian Bank
11	Punjab National Bank
12	Union Bank of India
13	Yes Bank Limited
14	RBL Bank Ltd.
15	Standard Chartered Bank
16	Indian Overseas Bank
17	Kotak Mahindra Bank Limited
18	Federal Bank Limited
19	Hongkong and Shanghai Banking Corporation Ltd

On Bidder's office letter pad

Make in India (Model Certificate) Annexure-I

Self-Declaration

Enquiry No.	
Enquiry Date	

In line with Government public procurement order Number P-45021/2/2017-B.E-II dated 15.06.2017, and further modified order dt. 28.05.2018, 29.05-2019 and 04.06.2020

I / We hereby declare that I / We are a "Local Supplier" meeting the requirement of minimum local content (…….%) defined in the above government notification for the goods against above mentioned enquiry Number.

Details of location at which local value addition will be made is as follows:

Door No.	
Street / Address 1	
Street / Address 2	
District	
State	
Country	
PIN Code	

We also understand that the false declarations will be considered as breach of Integrity and liable for action.

For Company Name:
Seal:
Signature:

Date:
Place:

(Please fill all Yellow color field)