DRAWING NO. 2-V-WA81-18080

ALL DIMENSIONS ARE IN MILLIMETRES. FOR TOLERANCES OF UNTOLERANCED DIMENSIONS DURING MANUFACTURE REFER RELEVANT QCP / QP

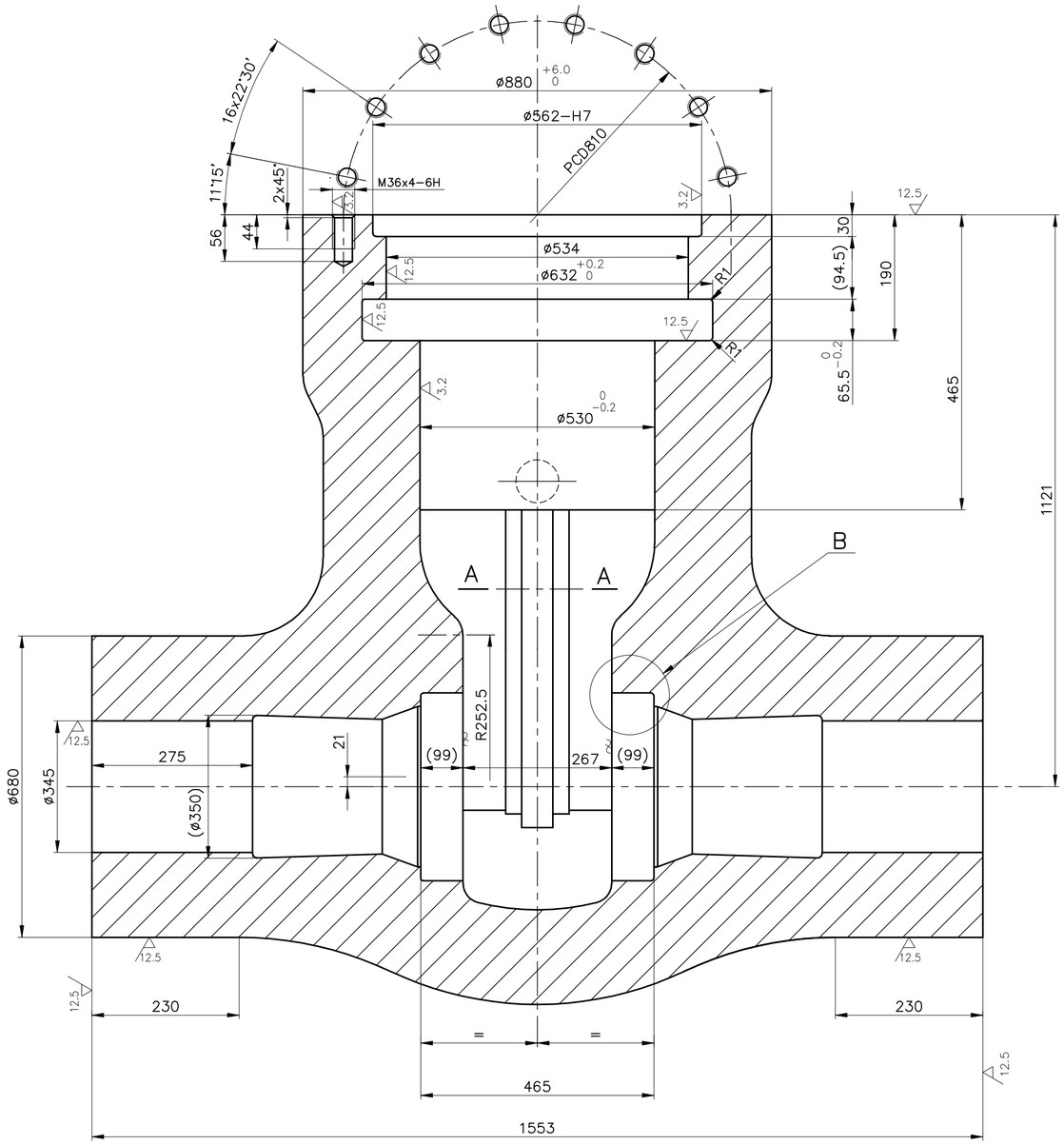

DETAIL B

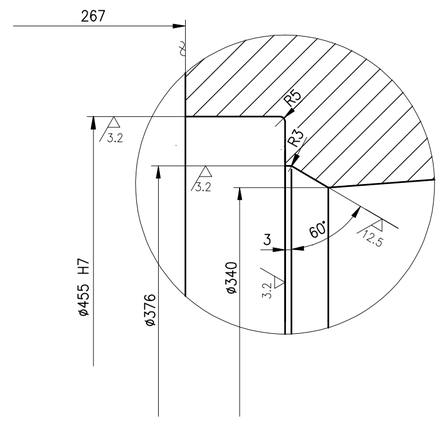

SECTION-AA

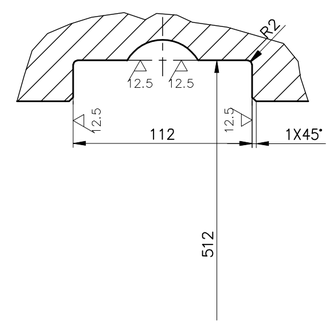

ø455 H7	+0.063 / 0
ø562 H7	+0.070 / 0

NOTES:

1. LATEST APPLICABLE QUALITY WORK INSTRUCTION SHALL BE FOLLOWED IN ALL RESPECTS.
2. DIMENSIONS R252.5 AND 21 INCLUDED FOR CONDITIONAL MACHINING. CARE SHOULD BE TAKEN TO REMOVE THE PIP TOTALLY ON THE TOP HALF AND AND NOT TO DIG ON THE BOTTOM HALF.

SL. No.	DRAWING No.	COMP. CODE	MATL. SPECN.			SCRAP SORT
01	2-V-WA81-18080	931232688500	A217 C12A,ATTEST, NT			20

No OFF	DESCRIPTION	MATL CODE	MATL SPECN	HEAT TREATMENT	SCRAP SORT	NET WT (kg)	GROSS WT (kg)	DRAWING No	ITEM No

CAUTION: The information on this document is the property of BHARAT HEAVY ELECTRICALS LTD. It must not be used directly or indirectly in any way detrimental to the interest of the company.

REV	DATE	ALTERED
		CHD & APPD
ZONE		

TYPE OF PRODUCT
OR NAME OF
CUSTOMER/PROJECT

BHARAT HEAVY ELECTRICALS LTD.,
UNIT: HIGH PRESSURE BOILER PLANT.
TIRUCHIRAPALLI-620014.
365-120

	NAME	SIGN	DATE	NO.OF VAR.
DRN	V.BAIRAVAN		01.12.11	
CHD	S.SATHEES		01.12.11	
APPD	K.RAJASEKARAN		01.12.11	

DEPT	SCALE	WEIGHT (KG).	REFERENCE INFORMATIONS	NO. OF ITEMS
V L	N T S			
CODE 320				

TITLE	CARD CODE	DRAWING NO.	REV
BODY (ROUGH) 22"/3000 SPL.CLASS	U 01	2-V-WA81-18080	

Size A2

DRAWING NO. 2-V-W780-18084

ALL DIMENSIONS ARE IN MILLIMETRES. FOR TOLERANCES OF UNTOLERANCED DIMENSIONS DURING MANUFACTURE REFER RELEVANT QCP / QP

1

ø365 H7	+0.057
	0

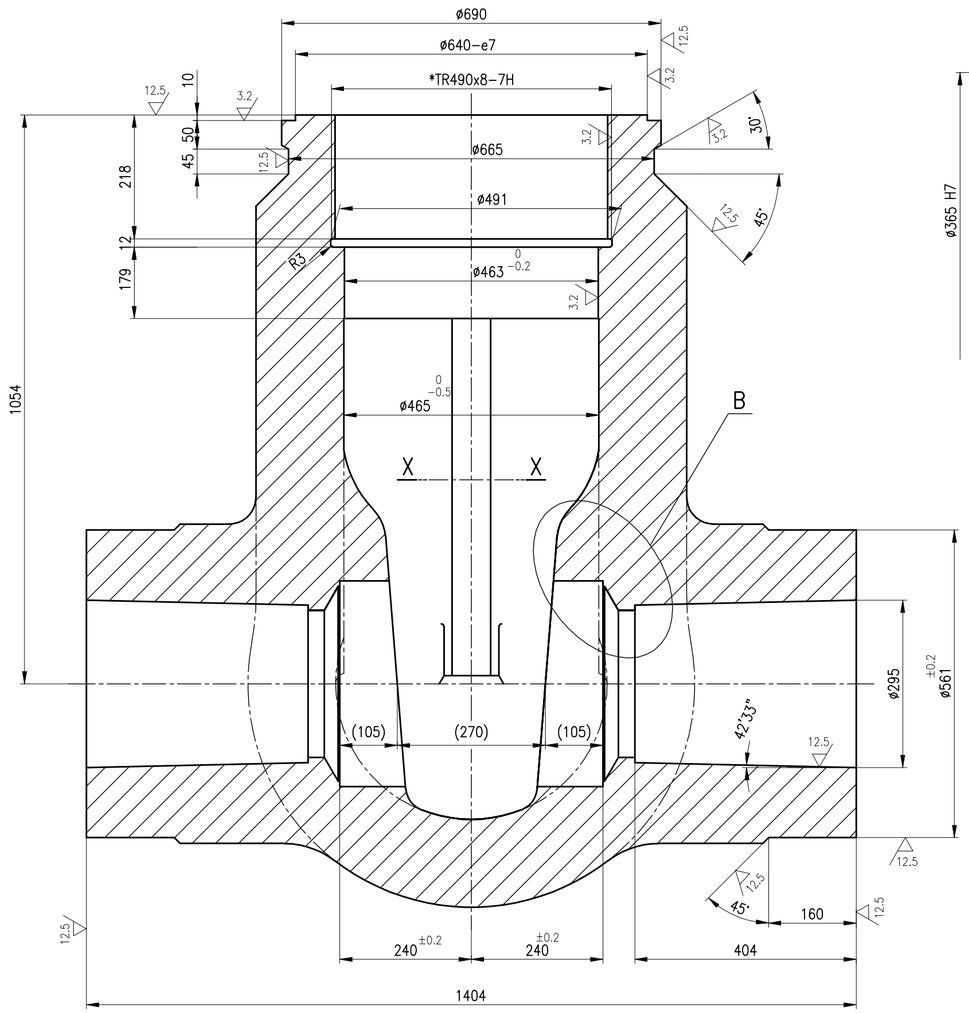

DETAIL – B

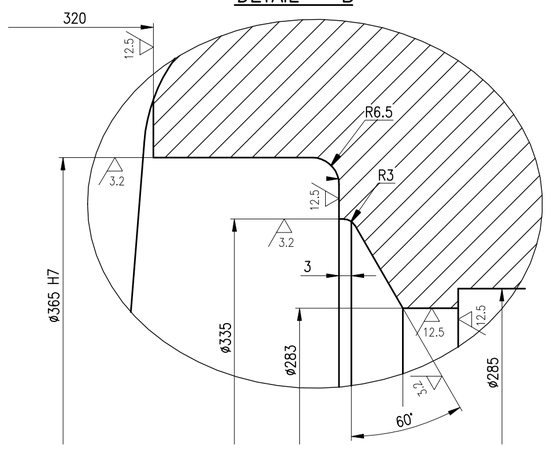

SECTION – XX

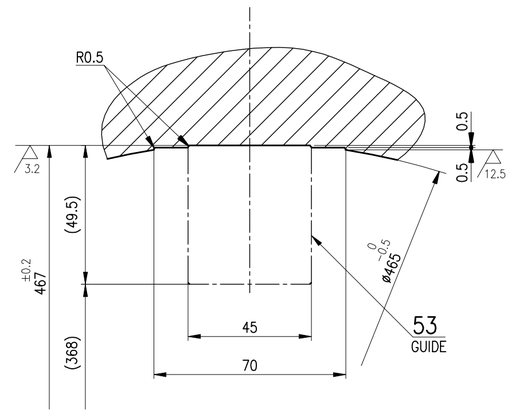

NOTES:

01. LATEST APPLICABLE QUALITY WORK INSTRUCTIONS SHALL BE FOLLWED IN ALL RESPECTS.

COMP. CODE – 93 123 307 8500

No OFF	DESCRIPTION	MATL CODE	MATL SPECN	HEAT TREATMENT	SCRAP SORT	NET WT (kg)	GROSS WT (kg)	DRAWING No	ITEM No
			A217 C12A, ATTEST	NT	20				

TYPE OF PRODUCT
OR NAME OF
CUSTOMER/PROJECT

BHARAT HEAVY ELECTRICALS LTD.,
UNIT: HIGH PRESSURE BOILER PLANT.
TIRUCHIRAPALLI -620014.
365-120

	NAME	SIGN	DATE	NO.OF VAR.
DRN	V.BAIRAVAN		01.12.11	
CHD	S.SATHEES		01.12.11	
APPD	K.RAJASEKARAN		01.12.11	

REV	DATE	ALTERED
		CHD & APPD
ZONE		

CAUTION: The information on this document is the property of BHARAT HEAVY ELECTRICALS LTD. It must not be used directly or indirectly in any way detrimental to the interest of the company.

DEPT VL | CODE 320 | SCALE N T S | WEIGHT (KG). | REFERENCE INFORMATIONS | NO. OF ITEMS

TITLE: BODY (ROUGH) (20"/2850 SPL CLASS)

CARD CODE: U 01

DRAWING NO. 2-V-W780-18084

REV

EOL/VAD 8 Size A2

DRAWING NO. 2-V-V493-18083

ALL DIMENSIONS ARE IN MILLIMETRES. FOR TOLERANCES OF UNTOLERANCED DIMENSIONS DURING MANUFACTURE REFER RELEVANT QCP / QP

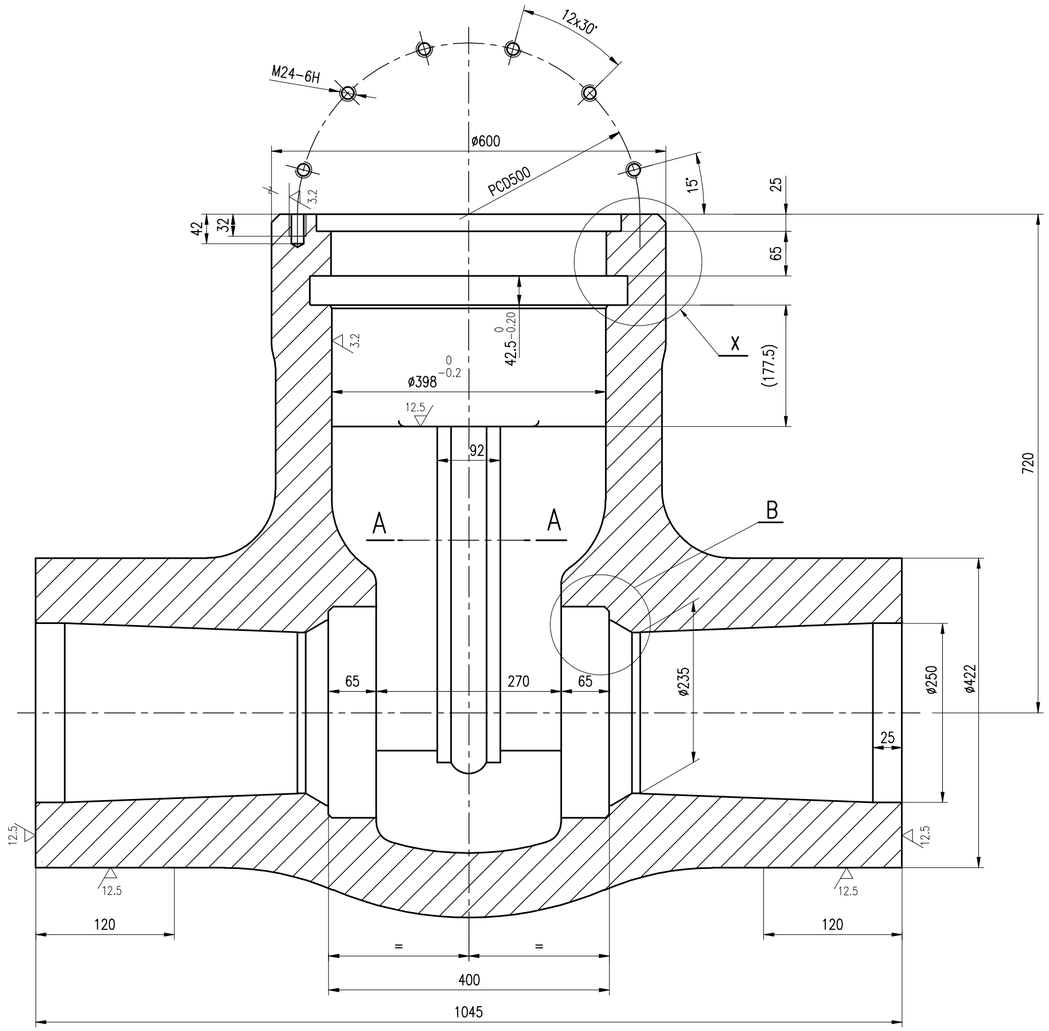

DETAIL-B

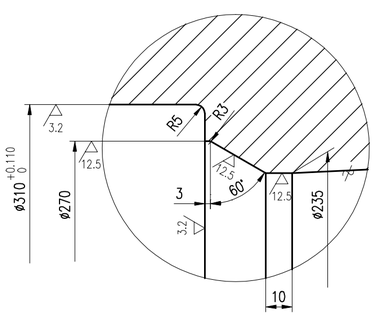

SECTION-AA

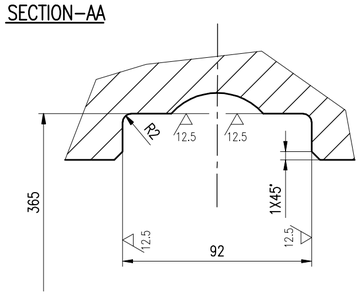

DETAIL-X

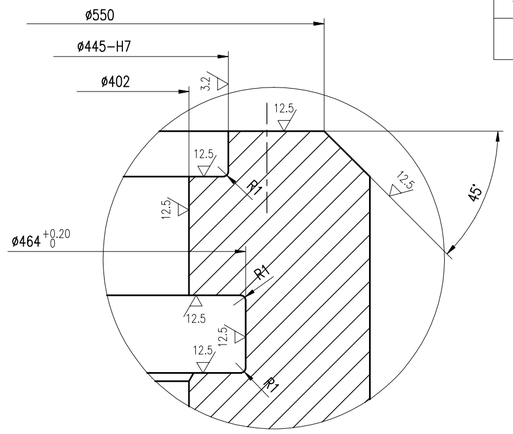

ø445 H7	+0.063
	0

NOTE:-

1 LATEST APPLICABLE QUALITY WORK INSTRUCTIONS SHALL BE FOLLOWED IN ALL RESPECTS

COMP. CODE: 93 121 746 8500

No OFF	DESCRIPTION	MATL CODE	MATL SPECN	HEAT TREATMENT	SCRAP SORT	NET WT (kg)	GROSS WT (kg)	DRAWING No	ITEM No
			ASTM A217 C12A ATTEST	NT	20				

TYPE OF PRODUCT OR NAME OF CUSTOMER/PROJECT: TA

BHARAT HEAVY ELECTRICALS LTD.,
UNIT: HIGH PRESSURE BOILER PLANT.
TIRUCHIRAPALLI -620014.
365-120

	NAME	SIGN	DATE	NO.OF VAR.
DRN	V.BAIRAVAN.		01.12.11	
CHD	S.SATHEES		01.12.11	
APPD	K.RAJASEKARAN		01.12.11	

DEPT	SCALE	WEIGHT (KG).	REFERENCE INFORMATIONS	NO. OF ITEMS
VL	NTS	1693		
CODE 320				

TITLE: BODY (ROUGH)
12"/2500 SPL. CLASS

CARD CODE: U 01

DRAWING NO. 2-V-V493-18083

REV

REV	DATE	ALTERED
		CHD & APPD
ZONE		

CAUTION: The information on this document is the property of BHARAT HEAVY ELECTRICALS LTD. It must not be used directly or indirectly in any way detrimental to the interest of the company.

Size A2

DRAWING NO. 2-V-0000-17594

ALL DIMENSIONS ARE IN MILLIMETRES. FOR TOLERANCES OF UNTOLERANCED DIMENSIONS DURING MANUFACTURE REFER RELEVANT QCP / QP

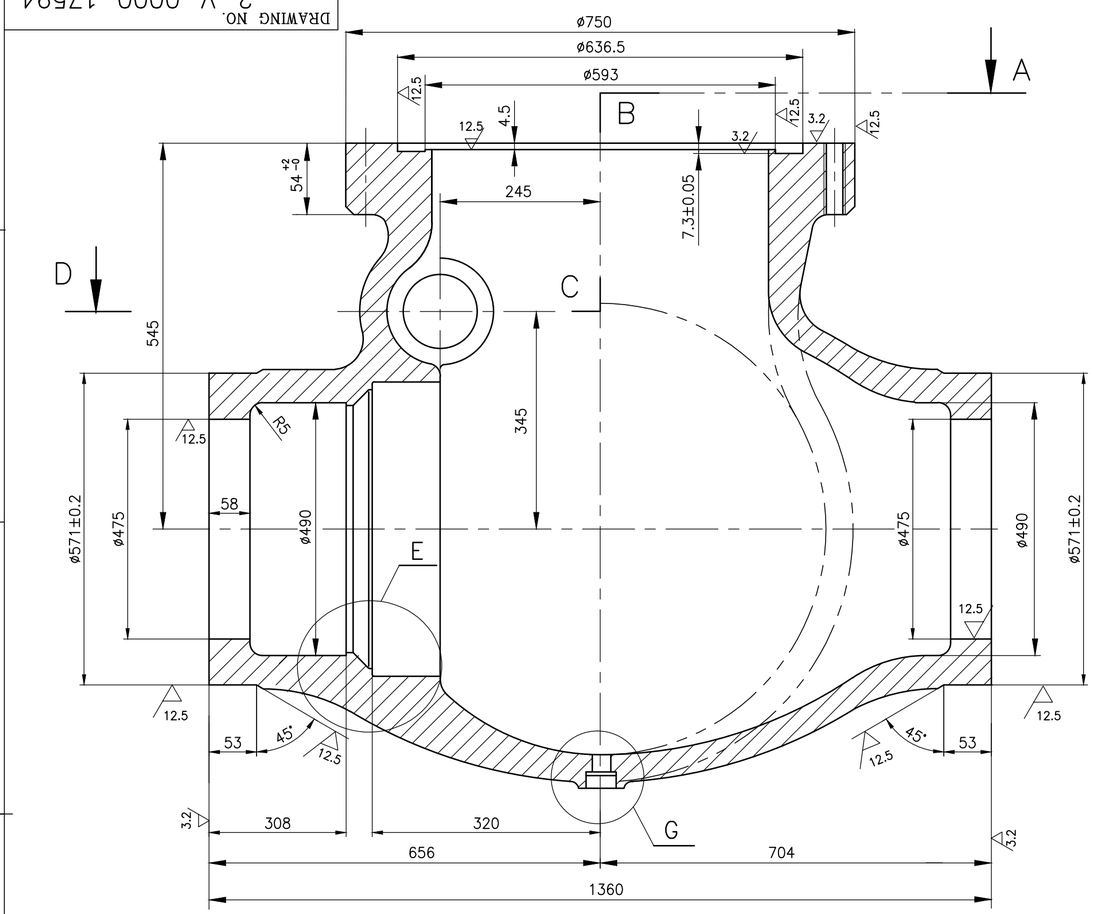

SECTION–ABCD

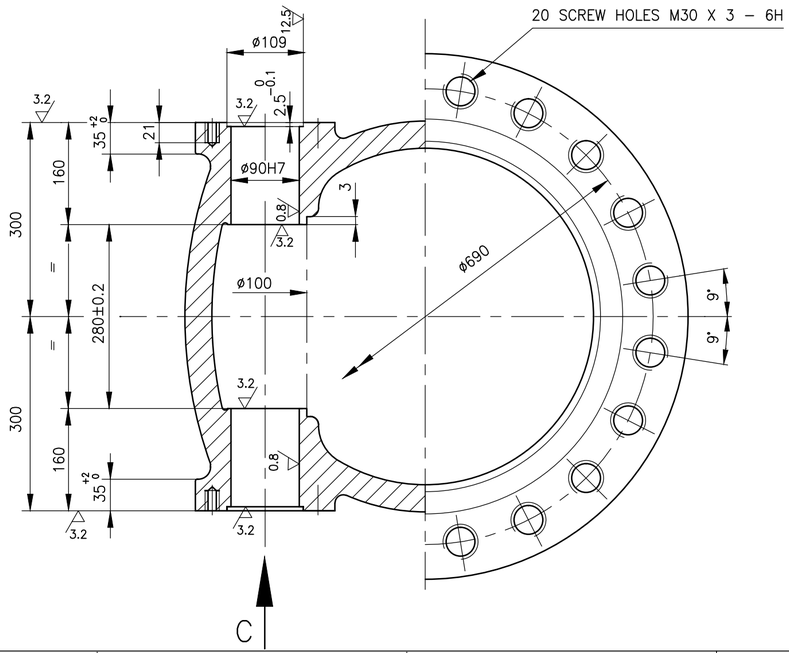

DETAIL–E

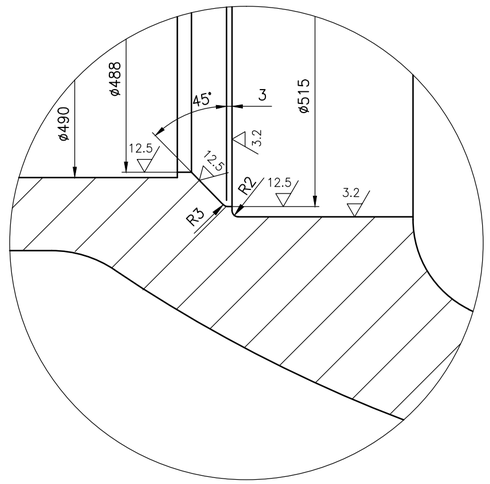

VIEW–C

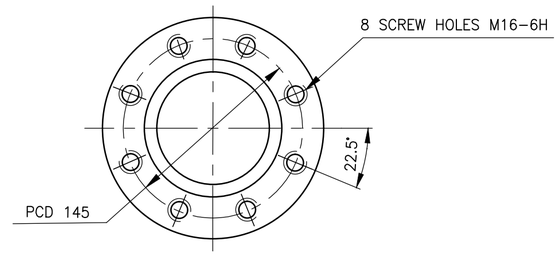

ø90H7	+0.035
	0
ø10–H7	+0.015
	0

1 ✓ 12.5, 3.2, 0.8

NOTES:

1. LATEST APPLICABLE QUALITY WORK INSTRUCTION SHALL BE FOLLOWED IN ALL RESPECTS.

DETAIL–G

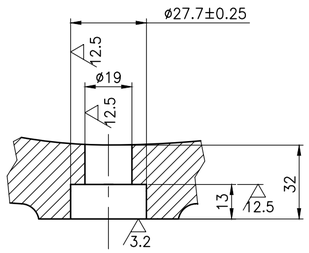

SL. NO.	DRAWING NO.	COMP. CODE	MATERIAL SPECN.	ATTEST	CASTING DRG No. / CASTING COMP. CODE		SCRAP SORT
02	2-V-L514-17594	95 460 008 0000	A217 WC6, NT		2-V-L629-17334R/1 / 92 152 677 0000		20
01	2-V-L513-17594	95 460 007 0000	A216 WCB, AN		2-V-L628-17334R/1 / 92 152 672 0000		10

No OFF	DESCRIPTION	MATL CODE	MATL SPECN	HEAT TREATMENT	SCRAP SORT	NET WT (kg)	GROSS WT (kg)	DRAWING No	ITEM No

TYPE OF PRODUCT OR NAME OF CUSTOMER/PROJECT: QN

BHARAT HEAVY ELECTRICALS LTD., UNIT: HIGH PRESSURE BOILER PLANT. TIRUCHIRAPALLI-620014. 365-120

	NAME	SIGN	DATE	NO.OF VAR.
DRN	V.BAIRAVAN		15.11.11	
CHD	P.RAMANIKARAN		15.11.11	
APPD	M.RAJAKUMAR		15.11.11	

DEPT: V L — CODE: 320 — SCALE: N.T.S. — WEIGHT (KG): 870 — REFERENCE INFORMATIONS — NO. OF ITEMS

TITLE: BODY ASSEMBLY — 20"/150 CL — MACHINING — CARD CODE: U 01

DRAWING NO. (REFER TABLE): 2-V-0000-17594 — REV

REV	DATE	ALTERED
		CHD & APPD
ZONE		

CAUTION: The information on this document is the property of BHARAT HEAVY ELECTRICALS LTD. It must not be used directly or indirectly in any way detrimental to the interest of the company.

Size A2

DRAWING NO. 2-V-0000-17593

ALL DIMENSIONS ARE IN MILLIMETRES. FOR TOLERANCES OF UNTOLERANCED DIMENSIONS DURING MANUFACTURE REFER RELEVANT QCP / QP

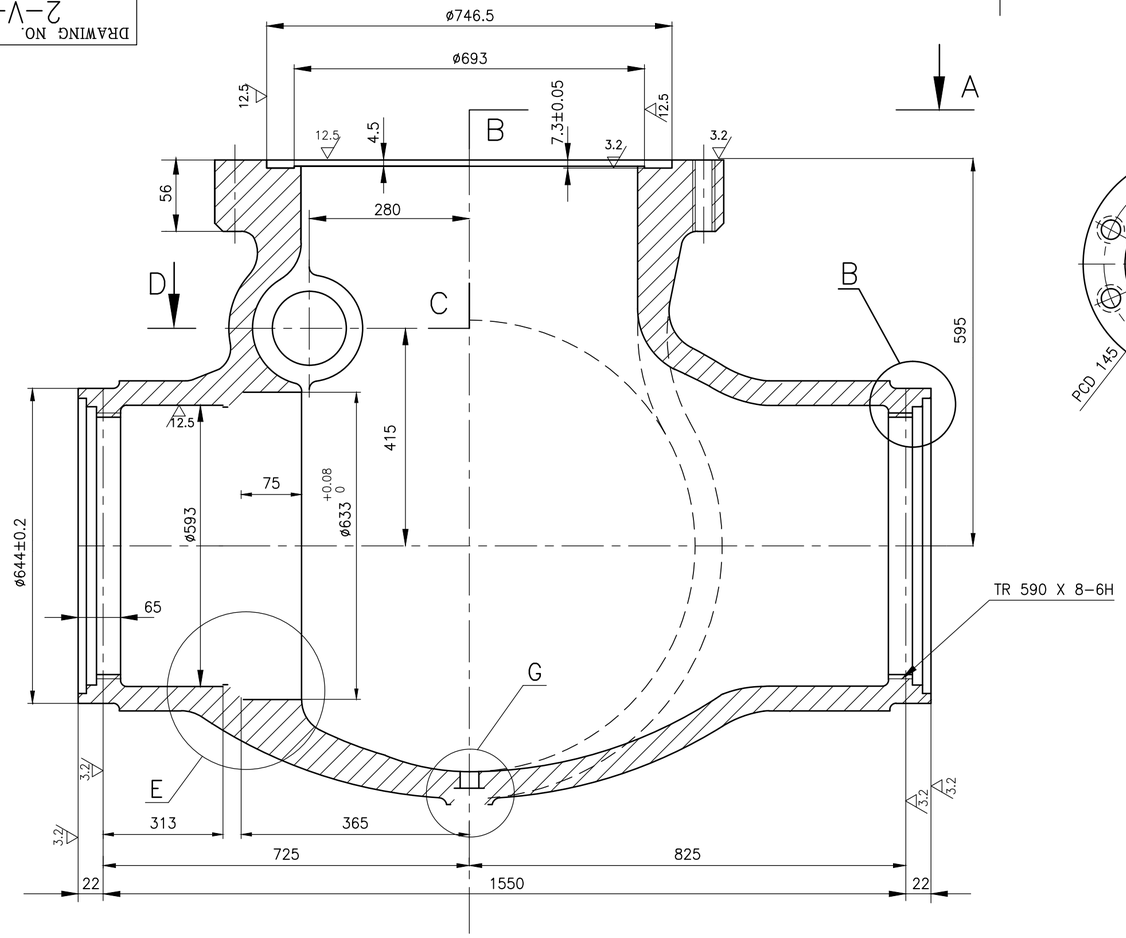

SECTION-ABCD

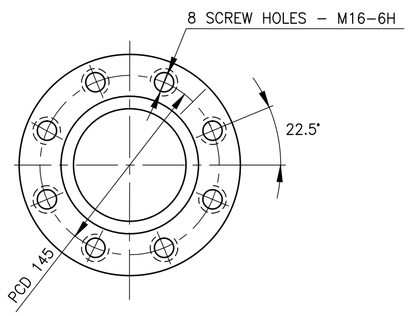

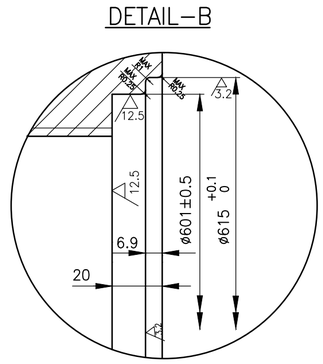

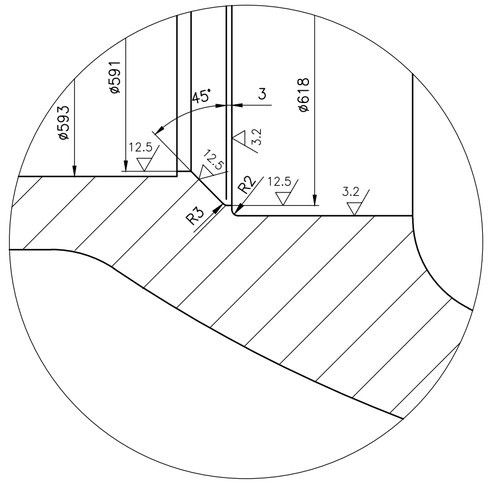

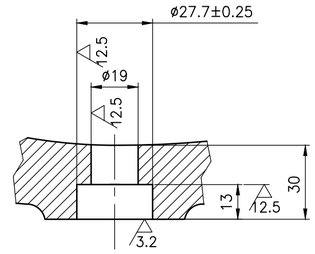

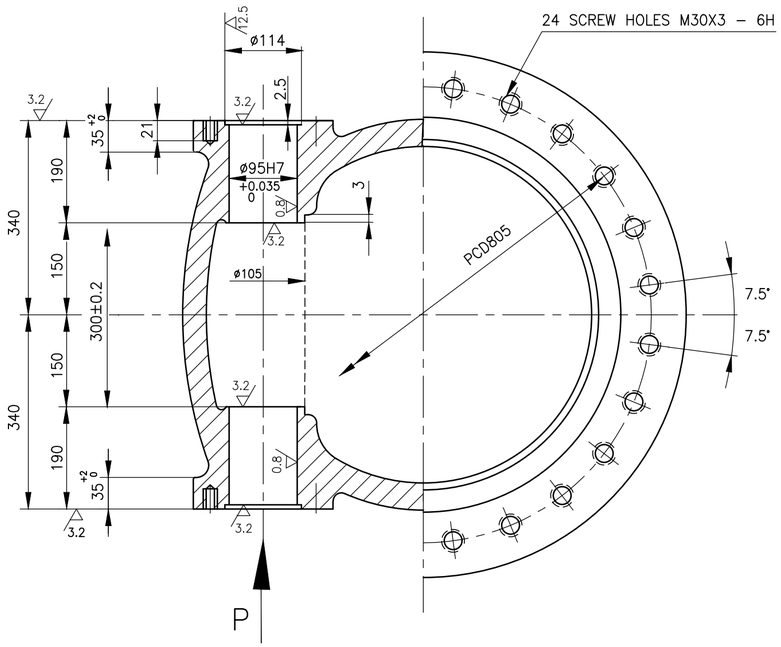

NOTES:

1. LATEST APPLICABLE QUALITY WORK INSTRUCTION SHALL BE FOLLOWED IN ALL RESPECTS.

SL. NO.	DRAWING NO.	COMP. CODE	MATERIAL SPECN.		CASTING DRG No. / CASTING COMP. CODE	SCRAP SORT
02	2-V-L520-17593	95 460 002 0000	A217 WC6, NT	ATTEST	2-V-L633-17336R / 92 152 677 0000	20
01	2-V-L519-17593	95 460 001 0000	A216 WCB, AN	ATTEST	2-V-L632-17336R / 92 152 676 0000	10

No OFF	DESCRIPTION	MATL CODE	MATL SPECN	HEAT TREATMENT	SCRAP SORT	NET WT (kg)	GROSS WT (kg)	DRAWING No	ITEM No

TYPE OF PRODUCT OR NAME OF CUSTOMER/PROJECT: QN

BHARAT HEAVY ELECTRICALS LTD.,
UNIT: HIGH PRESSURE BOILER PLANT.
TIRUCHIRAPALLI-620014.

	NAME	SIGN	DATE	NO.OF VAR.
DRN	V.BAIRAVAN		15.11.11	
CHD	P.RAMANIKARAN		15.11.11	
APPD	M.RAJAKUMAR		15.11.11	

REV	DATE	ALTERED
		CHD & APPD
ZONE		

CAUTION: The information on this document is the property of BHARAT HEAVY ELECTRICALS LTD. It must not be used directly or indirectly in any way detrimental to the interest of the company.

DEPT: V L
CODE: 320
SCALE: N T S
WEIGHT (KG): 1211
REFERENCE INFORMATIONS
NO. OF ITEMS

TITLE: BODY ASSEMBLY
24"/150 CL
MACHINING
CARD CODE: U 01
DRAWING NO. REFER TABLE: 2-V-0000-17593
REV

Size A2

DRAWING NO 2-V-0000-17592

ALL DIMENSIONS ARE IN MILLIMETRES. FOR TOLERANCES OF UNTOLERANCED DIMENSIONS DURING MANUFACTURE REFER RELEVANT QCP / QP

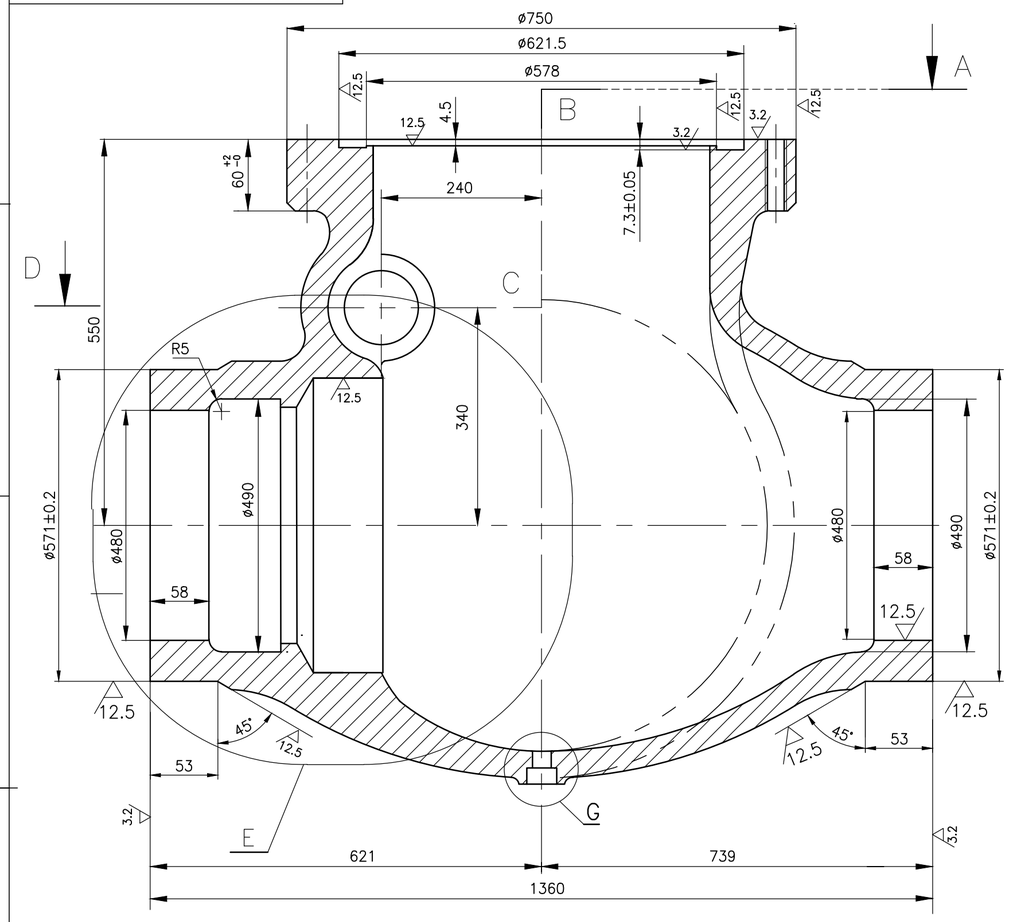

SEAT BORE MACHINING DETAILS

DETAIL-E

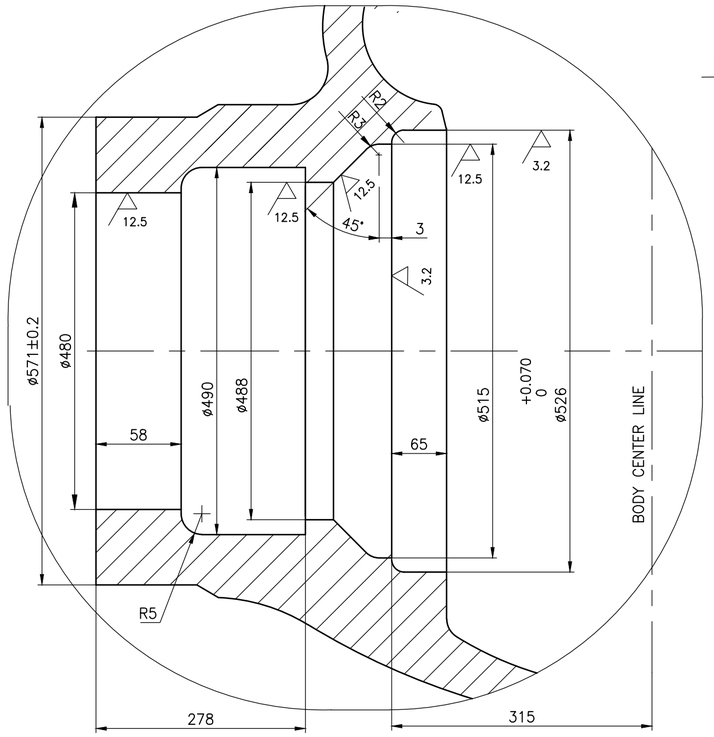

VIEW-E

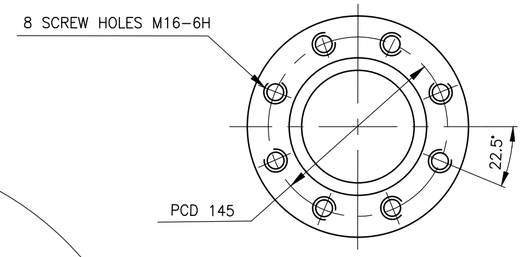

1 ✓ 12.5, 3.2, 0.8

ø90-H7	+0.035	
	0	
ø10-H7	+0.015	
	0	

DETAIL-G

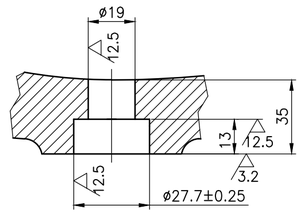

SECTION-ABCD

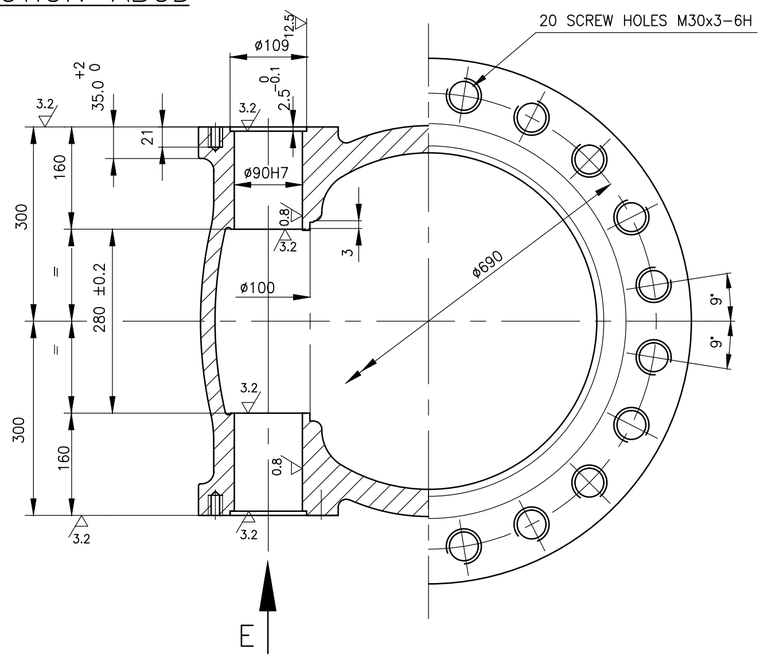

NOTES:

1. APPLICABLE LATEST QUALITY WORK INSTRUCTION SHALL BE FOLLOWED IN ALL RESPECTS.

SL. NO.	DRAWING NO.	COMP. CODE	MATERIAL SPECN.	ATTEST	CASTING DRG No. / CASTING COMP. CODE		SCRAP SORT
04	2-V-L518-17592	95 460 006 0000	A217 WC9, NT		2-V-L482-17335R/2 / 92 152 787 0000		20
03	2-V-L517-17592	95 460 005 0000	A216 WCC, AN		2-V-L481-17335R/2 / 92 152 786 0000		10
02	2-V-L516-17592	95 460 004 0000	A217 WC6, NT		2-V-L631-17335R/2 / 92 152 675 0000		20
01	2-V-L515-17592	95 460 003 0000	A216 WCB, AN		2-V-L630-17335R/2 / 92 152 674 0000		10

No OFF	DESCRIPTION	MATL CODE	MATL SPECN	HEAT TREATMENT	SCRAP SORT	NET WT (kg)	GROSS WT (kg)	DRAWING No	ITEM No

REV	DATE	ALTERED
		CHD & APPD
ZONE		

CAUTION: The information on this document is the property of BHARAT HEAVY ELECTRICALS LTD. It must not be used directly or indirectly in any way detrimental to the interest of the company.

TYPE OF PRODUCT OR NAME OF CUSTOMER/PROJECT: QN

BHARAT HEAVY ELECTRICALS LTD., UNIT: HIGH PRESSURE BOILER PLANT. TIRUCHIRAPALLI-620014. 365-120

	NAME	SIGN	DATE	NO.OF VAR.
DRN	V.BAIRAVAN		15.11.11	
CHD	P.RAMANIKARAN		15.11.11	
APPD	M.RAJAKUMAR		15.11.11	

DEPT	SCALE	WEIGHT (KG).	REFERENCE INFORMATIONS	NO. OF ITEMS
V L	N.T.S.	870		
CODE 320				

TITLE: BODY ASSEMBLY 20"/300CLASS MACHINING

CARD CODE: U 01

DRAWING NO. 2-V-0000-17592 (REFER TABLE)

REV

Size A2

DRAWING NO. 2-V-0000-14682

ALL DIMENSIONS ARE IN MILLIMETRES. FOR TOLERANCES OF UNTOLERANCED DIMENSIONS DURING MANUFACTURE REFER RELEVANT QCP / QP

12.5 6.3 3.2 1.6 0.8

ø868-h11	0
	-0.560

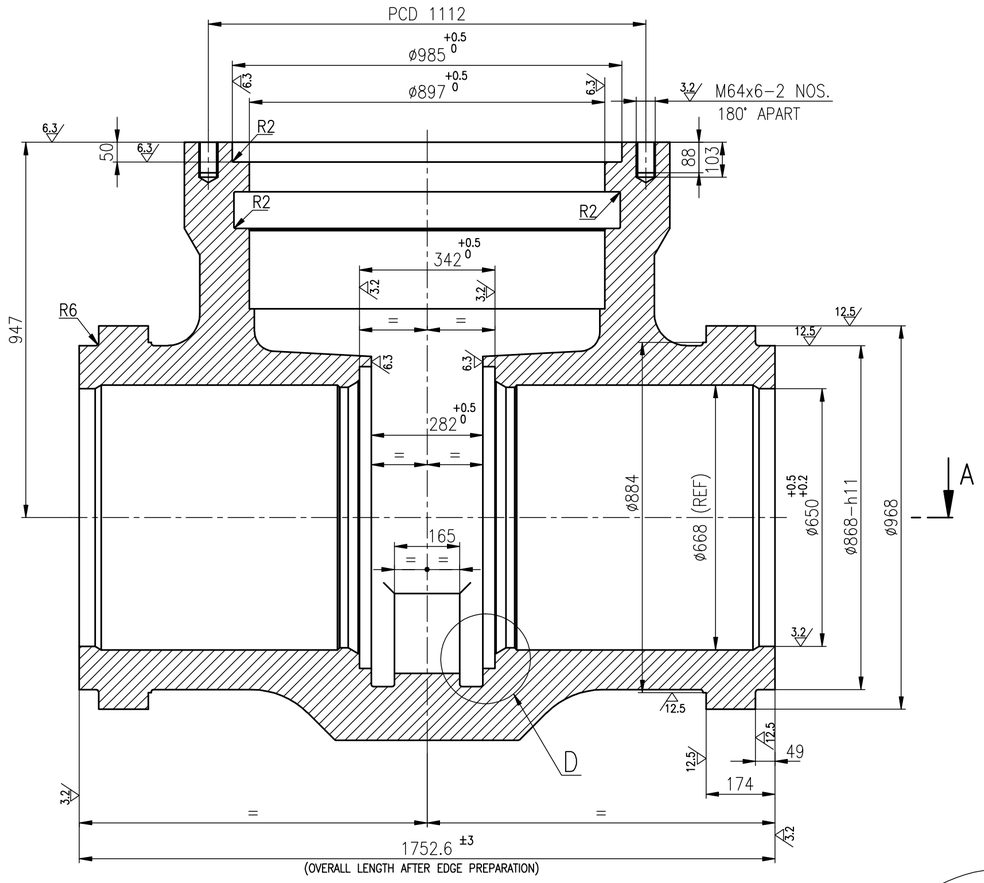

SECTION – BB

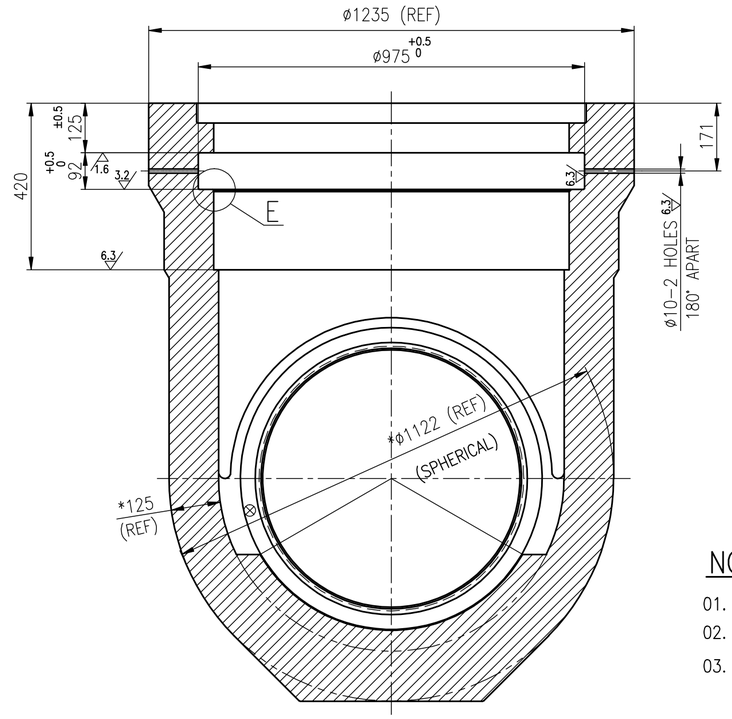

SECTION – CC

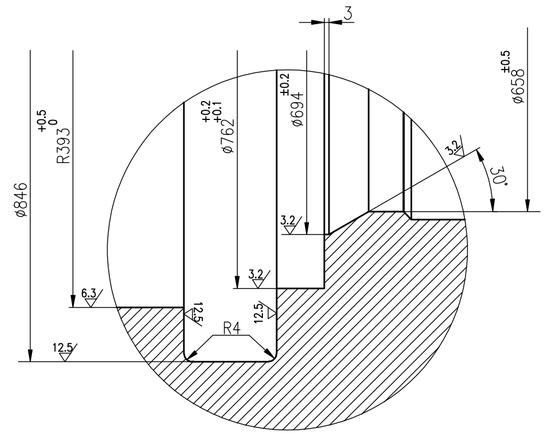

DETAIL – D

NOTES

01. UNSPECIFIED SHARP CORNER TO BE CHAMFERED TO 1 x 45°.
02. EDGE PREPARATION IS TO BE DONE AFTER HYD. TESTING.
03. * THESE DIMENSIONS ARE INDICATED FOR IBR CALCULATION PURPOSE ONLY.

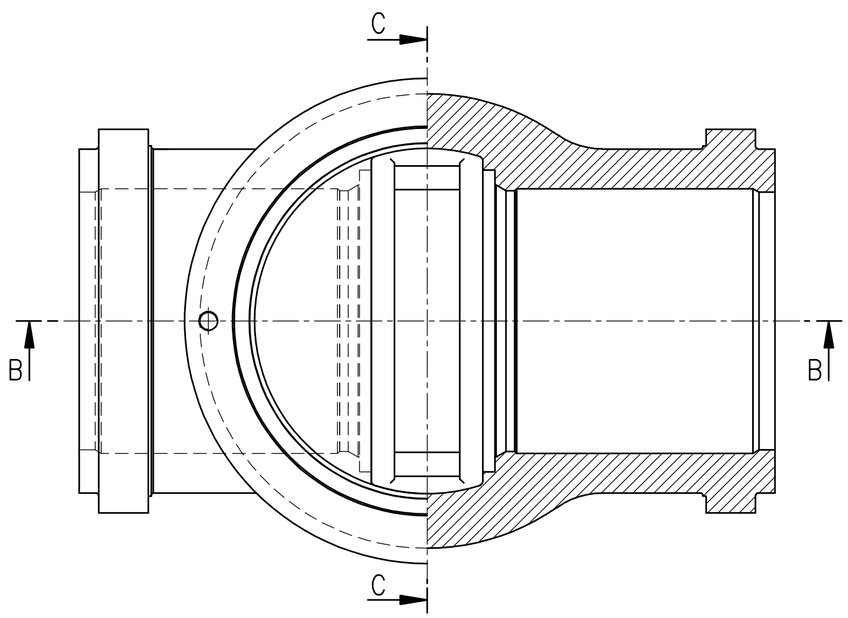

SECTION – AA

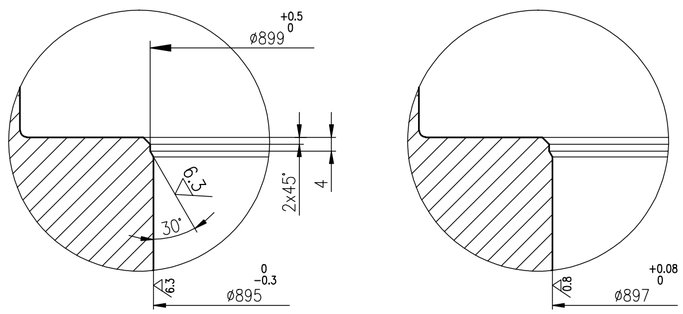

(BEFORE FINISH MACHINING) (AFTER FINISH MACHINING)

DETAIL – E

SL No.	DESCRIPTION	MATL CODE	MATL SPECN	HEAT TREATMENT	SCRAP SORT	NET WT (kg)	GROSS WT (kg)	DRAWING No / COMPONENT CODE	ITEM No
02	CASTING	92 202 069	ASTM A217 C12A ATTEST	NORMALISED &TEMPERED	20	6380	6800	2.V.3319.14682 / 93 202 316 0000	001
01	CASTING	92 202 077	ASTM A216 WCC ATTEST	NORMALISED	10	6380	6800	2.V.3314.14682 / 93 202 334 0000	001

TYPE OF PRODUCT OR NAME OF CUSTOMER/PROJECT: CS

BHARAT HEAVY ELECTRICALS LTD.,
UNIT: HIGH PRESSURE BOILER PLANT.
TIRUCHIRAPALLI -620014.
365-120

	NAME	SIGN	DATE	NO.OF VAR.
DRN	S.KOMALA		19.01.11	
CHD	M.SRINIVASAN		19.01.11	
APPD	M.RAJAKUMAR		19.01.11	

DEPT VL | CODE 320 | SCALE N T S | WEIGHT (KG). 6380 | REFERENCE INFORMATIONS | NO. OF ITEMS

TITLE: BODY (800mm) | CARD CODE U 01 | DRAWING NO. 2-V-0000-14682 | REV 00

REV	DATE	ALTERED
		CHD & APPD
ZONE		

CAUTION: The information on this document is the property of BHARAT HEAVY ELECTRICALS LTD. It must not be used directly or indirectly in any way detrimental to the interest of the company.

Size A2

DRAWING NO. 2-V-0000-14088

ALL DIMENSIONS ARE IN MILLIMETRES. FOR TOLERANCES OF UNTOLERANCED DIMENSIONS DURING MANUFACTURE REFER RELEVANT QCP / QP

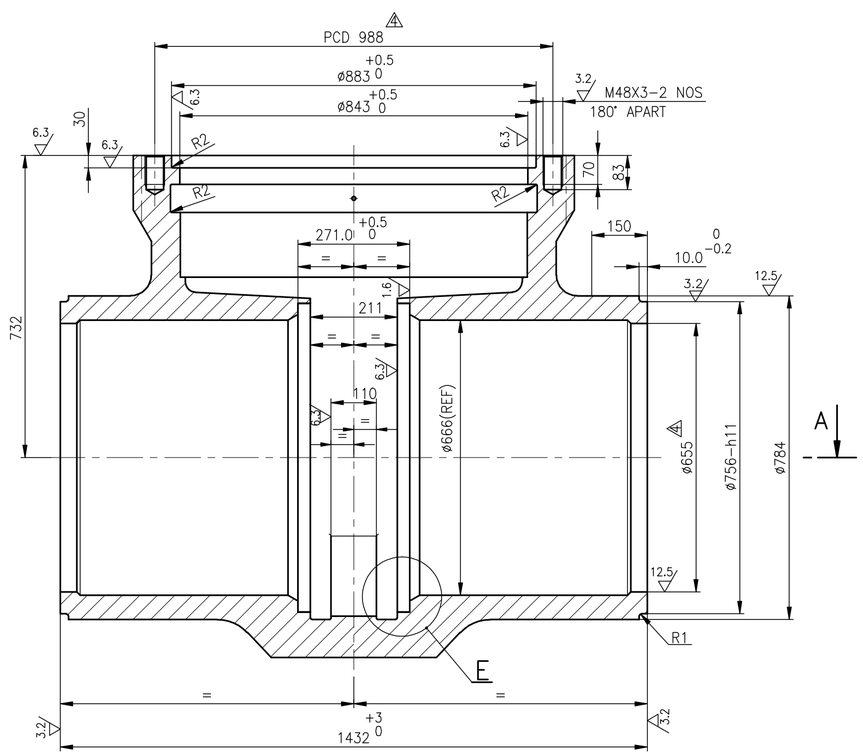

SECTION-BB

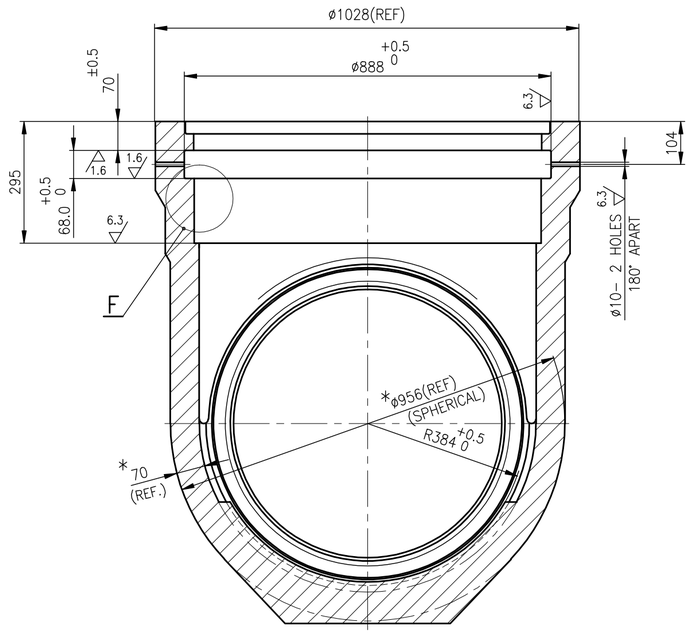

SECTION-CC

DETAIL-E

ø756-h11	0 / -0.500

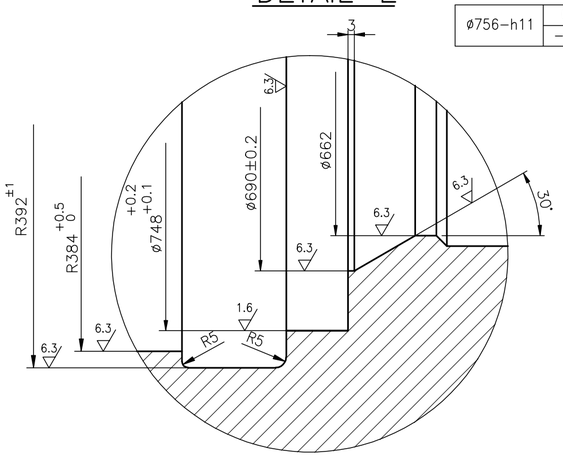

NOTES

1. UNSPECIFIED SHARP CORNER TO BE CHAMFERED TO 1 X 45°
2. EDGE PREPARATION IS TO BE DONE AFTER HYD.TESTING.
* 3. THESE DIMENSIONS ARE INDICATED FOR IBR CALCULATION PURPOSE ONLY.

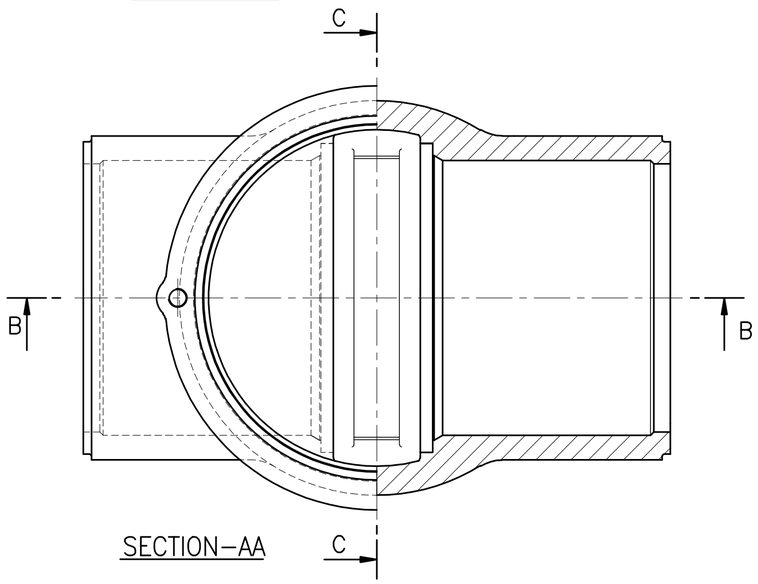

SECTION-AA

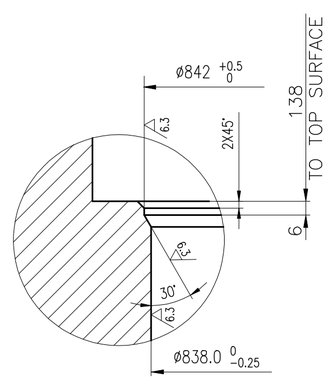

BEFORE FINISH MACHINING

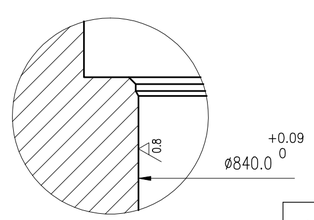

AFTER FINISH MACHINING

DETAIL-F

SL No.	DESCRIPTION	MATL CODE	MATL SPECN	HEAT TREATMENT	SCRAP SORT	NET WT (kg)	GROSS WT (kg)	DRAWING No / COMPONENT CODE	ITEM No
03	CASTING	92 201 874	ASTM A217 C12A-ATTEST	NORMALISED &TEMPERED	20	2482	2785	2.V.3316.14088/03 932017540000	001
02	CASTING	92 201 640	ASTM A217 WC9-ATTEST	NORMALISED &TEMPERED	20	2482	2785	2.V.3245.14088/03 932010330000	001
01	CASTING	92 201 873	ASTM A216 WCC-ATTEST	NORMALISED	10	2482	2785	2.V.3315.14088/03 932017530000	001

REV	DATE	ALTERED M.SRINIVASAN / CHD & APPD M.RAJAKUMAR	REV	DATE	ALTERED M.SRINIVASAN / CHD & APPD M.RAJAKUMAR	REV	DATE	ALTERED M.SRINIVASAN / CHD & APPD M.RAJAKUMAR	REV	DATE	ALTERED M.SRINIVASAN / CHD & APPD M.RAJAKUMAR
04	24.09.11		03	15.03.11		02	05.03.11		01	02.11.09	
		PCD 988 & ø655 WERE PCD 964 & ø582 RESPLY. DCP: 801231			TEST PLUG THREAD ELIMINATED. ø582 AND ø756 INTRODUCED. LENGTH 1432 WAS 1426 DCP: 801159			DETAIL- F AND DIMENSIONS ø838, ø842 AND 6 INCLUDED. DCP: 801155	ZONE		DRAWING Nos. 2.V.3315.14088 AND 2.V.3316.14088 INCLUDED.

CAUTION: The information on this document is the property of BHARAT HEAVY ELECTRICALS LTD. It must not be used directly or indirectly in any way detrimental to the interest of the company.

TYPE OF PRODUCT
OR NAME OF
CUSTOMER/PROJECT

BHARAT HEAVY ELECTRICALS LTD.
UNIT: HIGH PRESSURE BOILER PLANT.
TIRUCHIRAPALLI -620014.
365-120

	NAME	SIGN	DATE	NO.OF VAR.
DRN	M.SRINIVASAN		07.03.07	
CHD	P.BOOMINATHAN		07.03.07	
APPD	M.RAJAKUMAR		07.03.07	

DEPT VL
CODE 320
SCALE NTS
WEIGHT (KG). REF.TABLE
REFERENCE INFORMATIONS CAD: F214088
NO. OF ITEMS

TITLE BODY (750mm)
CARD CODE U 01
DRAWING NO. 2-V-0000-14088
REV 04

Size A2

DRAWING NO. 1-V-0000-05195/2

ALL DIMENSIONS ARE IN MILLIMETRES. FOR TOLERANCES OF UNTOLERANCED DIMENSIONS DURING MANUFACTURE REFER RELEVANT QCP/QP

ø924-H8	+0.140
	0
ø800-	+0.090
ø1000-H7	0

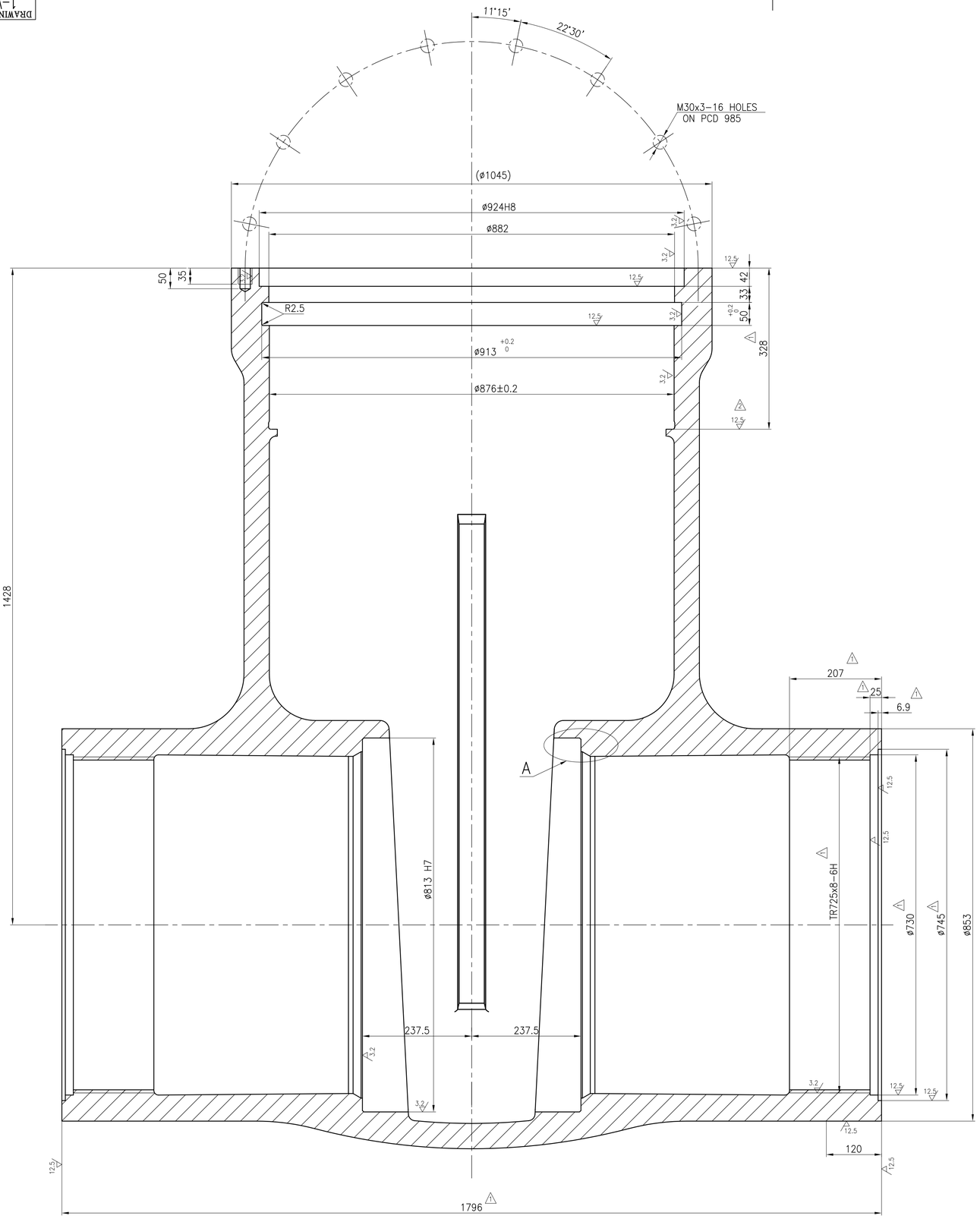

DETAIL A

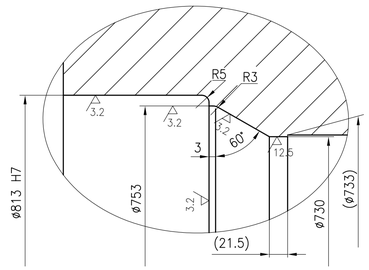

NOTE:

LATEST APPLICABLE QUALITY WORK INSTRUCTION SHALL BE FOLLOWED IN ALL RESPECT.

SL. No.	DRAWING No.	COMP. CODE	MATL. SPECN.	HEAT TREATMENT	SCRAP SORT	NET WT(Kg)	GROSS WT(Kg)
01	1-V-NA06-05195/2	931107020000	A216 WCC, ATTEST	AN	10	3796	4115

No OFF	DESCRIPTION	MATL CODE	MATL SPECN	HEAT TREATMENT	SCRAP SORT	NET WT (kg)	GROSS WT (kg)	DRAWING No	ITEM No

REV	DATE	ALTERED	VB
2	19.10.07	CHD & APPD	MRK

MACHINING INCLUDED.

DCP No.800759

REV	DATE	ALTERED	VB
1	9.5.05	CHD & APPD	MRK

DIMENSION 231 DELETED. DIMENSIONS ø730,TR725x8-6H,ø745,207,328,25 & 6.9 INCLUDED.
DIMENSION 1796 WAS 1782

DCP No.800449

CAUTION: The information on this document is the property of BHARAT HEAVY ELECTRICALS LTD. It must not be used directly or indirectly in any way detrimental to the interest of the company.

TYPE OF PRODUCT
OR NAME OF
CUSTOMER/PROJECT

BHARAT HEAVY ELECTRICALS LTD.,
UNIT: HIGH PRESSURE BOILER PLANT.
TIRUCHIRAPALLI-620014.

	NAME	SIGN	DATE
DRN	V.BAIRAVAN		17.03.04
CHD	R.L.NARAYANAN		17.03.04
APPD	M.RAJAKUMAR		17.03.04

DEPT	SCALE	WEIGHT (KG).	REFERENCE INFORMATIONS
VL	N T S	3796	CAD REF: 1V005195
CODE 320			

TITLE	CARD CODE	DRAWING NO.	REV
BODY 32"/600 CLASS	U 01	1-V-0000-05195	2

Size A1

DRAWING NO. 2-V-WA81-16652R/2

ALL DIMENSIONS ARE IN MILLIMETRES. FOR TOLERANCES OF UNTOLERANCED DIMENSIONS DURING MANUFACTURE REFER RELEVANT QCP / QP

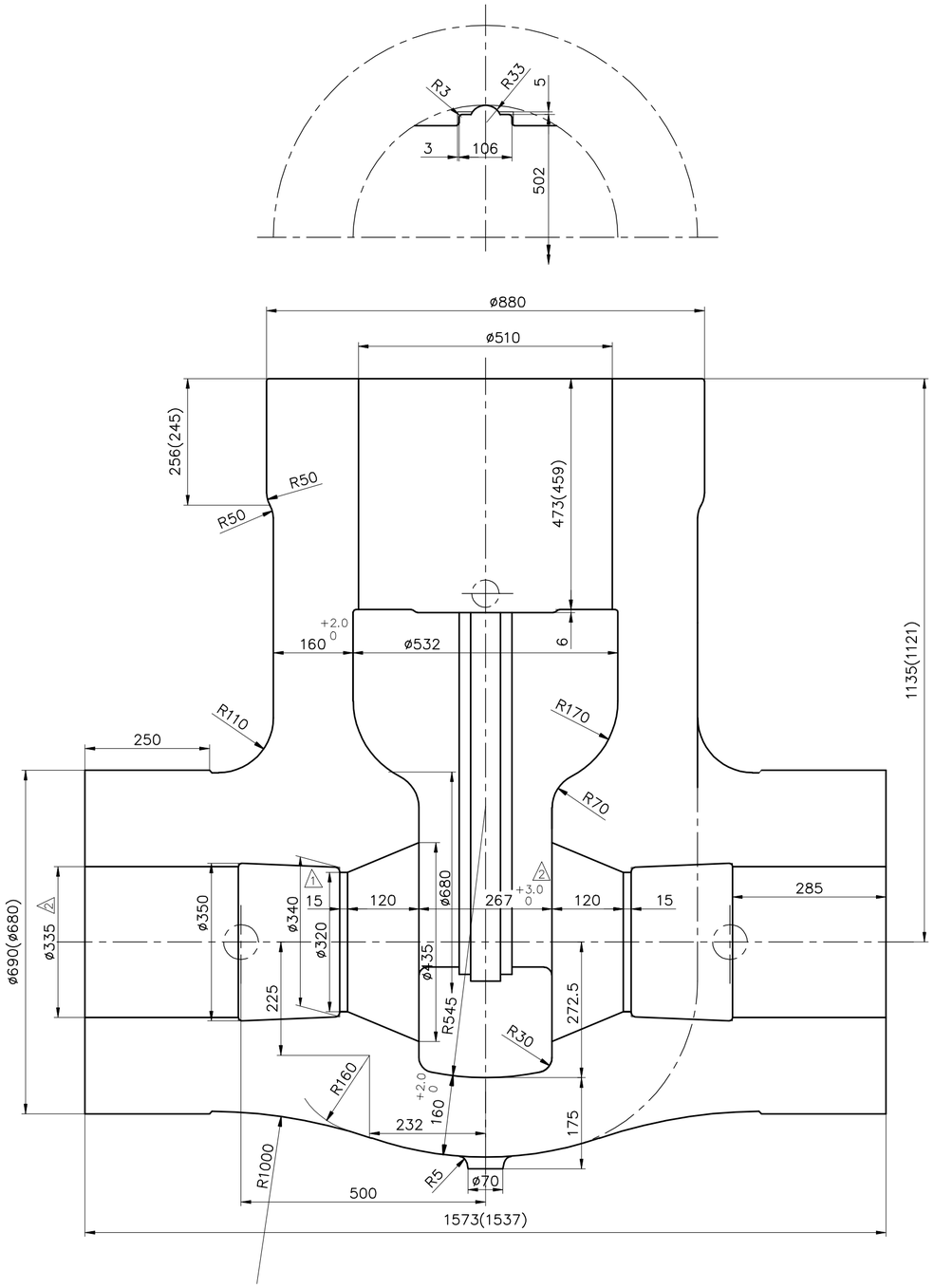

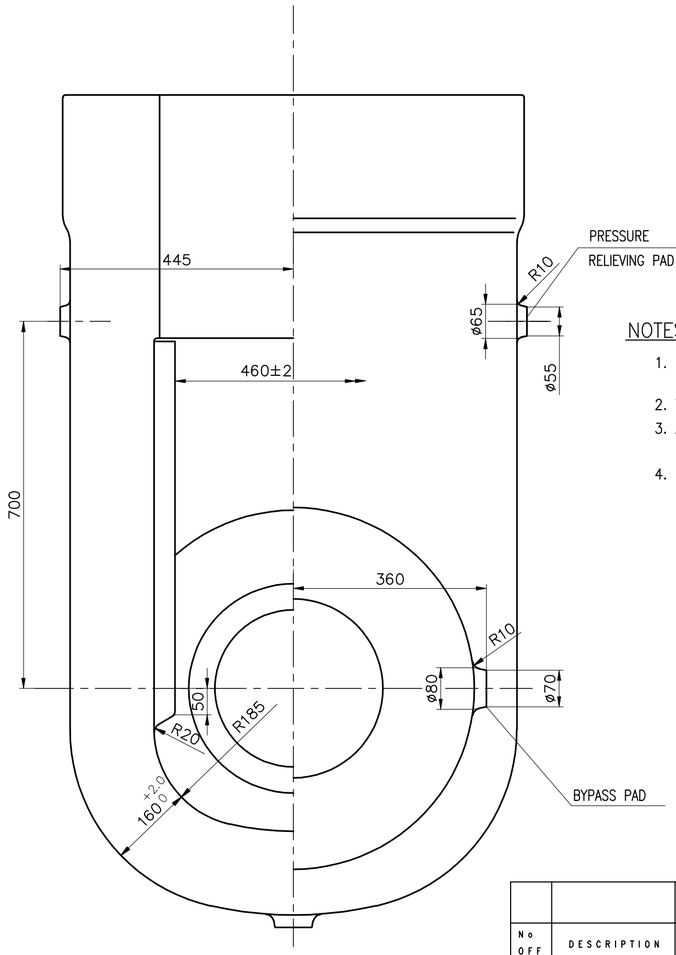

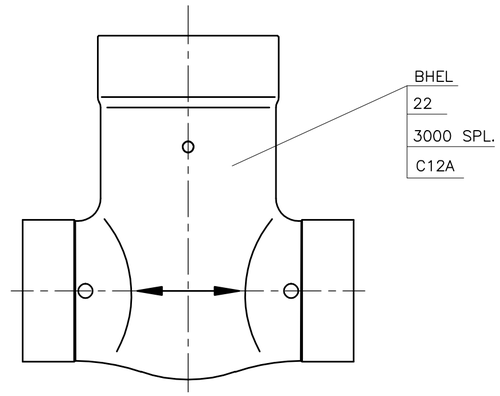

NOTES:

1. FOR ALL OTHER DETAILS LIKE DIMENSIONAL TOLERANCES, EMBOSSING ETC. REFER LATEST APPLICABLE QUALITY WORK INSTRUCTION
2. THE CASTING IS TO BE SUBJECTED RT/UT ON ALL CRITICAL LOCATIONS.
3. ALL EXTERIOR AND ACCESSIBLE INTERIOR SURFACES OF BODY SHALL BE MPI/LPI TESTED.
4. BYPASS VALVE PADDING AND PRESSURE RELIEVING PAD SHALL BE PROVIDED ON BOTH SIDES OF THE BODY

No OFF	DESCRIPTION	MATL CODE	MATL SPECN	HEAT TREATMENT	SCRAP SORT	NET WT (kg)	GROSS WT (kg)	DRAWING No	ITEM No
		921530520000	A217 C12A ATTEST						

TYPE OF PRODUCT
OR NAME OF
CUSTOMER/PROJECT

BHARAT HEAVY ELECTRICALS LTD.,
UNIT: HIGH PRESSURE BOILER PLANT.
TIRUCHIRAPALLI-620014.
365-120

	NAME	SIGN	DATE	NO.OF VAR.
DRN	V.BAIRAVAN		22.12.06	
CHD	K.RAJASEKARAN		22.12.06	
APPD	M.RAJAKUMAR		22.12.06	

DEPT V L
CODE 320
SCALE NTS
WEIGHT (KG). 6230
REFERENCE INFORMATIONS
NO. OF ITEMS

TITLE BODY
CASTING 22"/3000 SPL.CLASS
CARD CODE U 01
DRAWING NO. 2-V-WA81-16652R
REV 2

REV	DATE	ALTERED	
2	09.08.11	VB CHD & APPD	SSK & KRS
ZONE	DIMENSION ø335 WAS ø310 WT. 6230 WAS 5875 DIMENSION 267 +3.0 0 WAS 267 DCP No.801210		

REV	DATE	ALTERED	
1	01.02.10	VB CHD & APPD	SSK & KRS
ZONE	ARROW HEAD FOR DIMENSION LINE 120 CORRECTED. DIMENSION 15 INCLUDED. DCP NO.801028		

CAUTION: The information on this document is the property of BHARAT HEAVY ELECTRICALS LTD. It must not be used directly or indirectly in any way detrimental to the interest of the company.

Size A2

DRAWING NO. 2-V-W780-16676R/1

ALL DIMENSIONS ARE IN MILLIMETRES. FOR TOLERANCES OF UNTOLERANCED DIMENSIONS DURING MANUFACTURE REFER RELEVANT QCP / QP

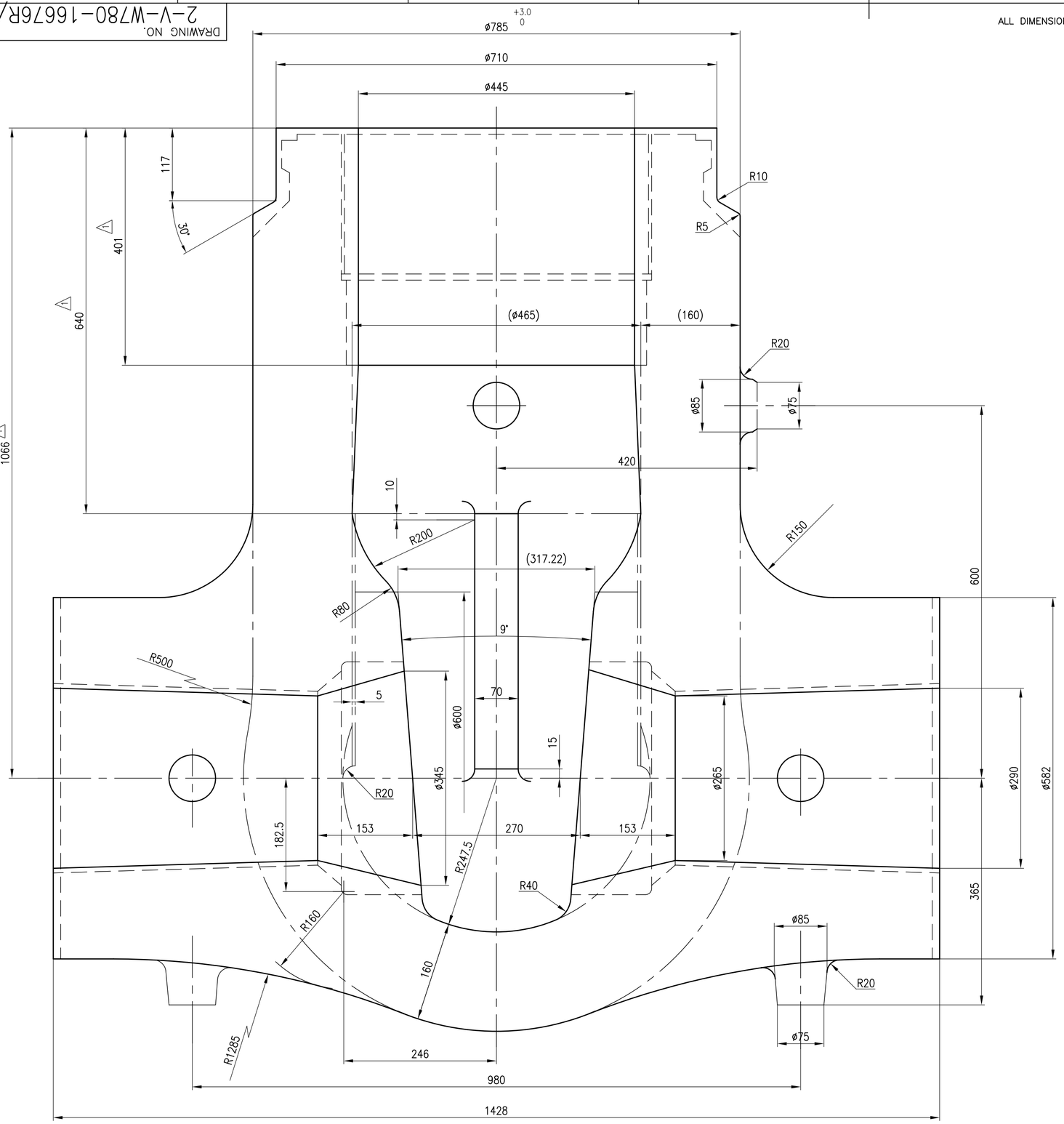

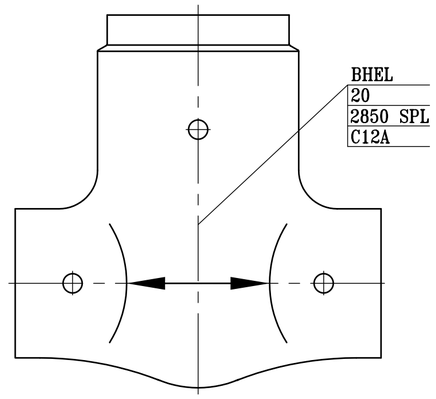

NOTES:

01. DOTTED LINES SHOWS FINISH MACHINED CONFIGURATION.
02. FOR ALL OTHER DETAILS LIKE DIMENSIONAL TOLERANCE, HYDAULIC TEST PRESSURE ETC., REFER LATEST APPLICABLE QUALITY PROCEDURE.
03. BYPASS VALVE PADDING AND PRESSURE RELIEVING PAD WILL BE ON BOTH SIDES OF THE BODY.
04. THE BODY IS TO BE SUBJECTED RT/UT ON ALL CRITICAL LOCATIONS.
05. ALL EXTERIOR AND ACCESSIBLE INTERIOR SURFACES OF BODY SHALL BE MPI/LPI TESTED.
06. THIS DRAWING IS IDENTICAL IN SHAPE AND DIMENSIONS TO DRAWING No.2-V-0000-16801R/1

SL No.	DRAWING NUMBER	MATERIAL CODE	MATERIAL SPECN			SCRAP SORT
01	2-V-W780-16676R/1	92 153 073 0000	A217 C12A, ATTEST, NT			

No OFF	DESCRIPTION	MATL CODE	MATL SPECN	HEAT TREATMENT	SCRAP SORT	NET WT (kg)	GROSS WT (kg)	DRAWING No	ITEM No

TYPE OF PRODUCT
OR NAME OF
CUSTOMER/PROJECT

BHARAT HEAVY ELECTRICALS LTD.,
UNIT: HIGH PRESSURE BOILER PLANT.
TIRUCHIRAPALLI -620014.
365-120

	NAME	SIGN	DATE	NO.OF VAR.
DRN	V.BAIRAVAN		07.02.07	
CHD	K.RAJASEKARAN		07.02.07	
APPD	M.RAJAKUMAR		07.02.07	

DEPT VL
CODE 320
SCALE N T S
WEIGHT (KG). 4846
REFERENCE INFORMATIONS
NO. OF ITEMS

TITLE
BODY (CASTING)
(20"/2850 SPL CLASS)

CARD CODE U 01

DRAWING NO. 2-V-W780-16676R

REV 1

Size A2

REV	DATE	ALTERED VB
1	06.06.08	CHD & APPD KRS & MRK
ZONE	DIMENSIONS 640,401 & 1066 WERE 621,382 & 1047 RESPECTIVELY. DCP No.800826	

CAUTION: The information on this document is the property of BHARAT HEAVY ELECTRICALS LTD. It must not be used directly or indirectly in any way detrimental to the interest of the company.

DRAWING NO. 2-V-V493-16514R

ALL DIMENSIONS ARE IN MILLIMETRES. FOR TOLERANCES OF UNTOLERANCED DIMENSIONS DURING MANUFACTURE REFER RELEVANT QCP / QP

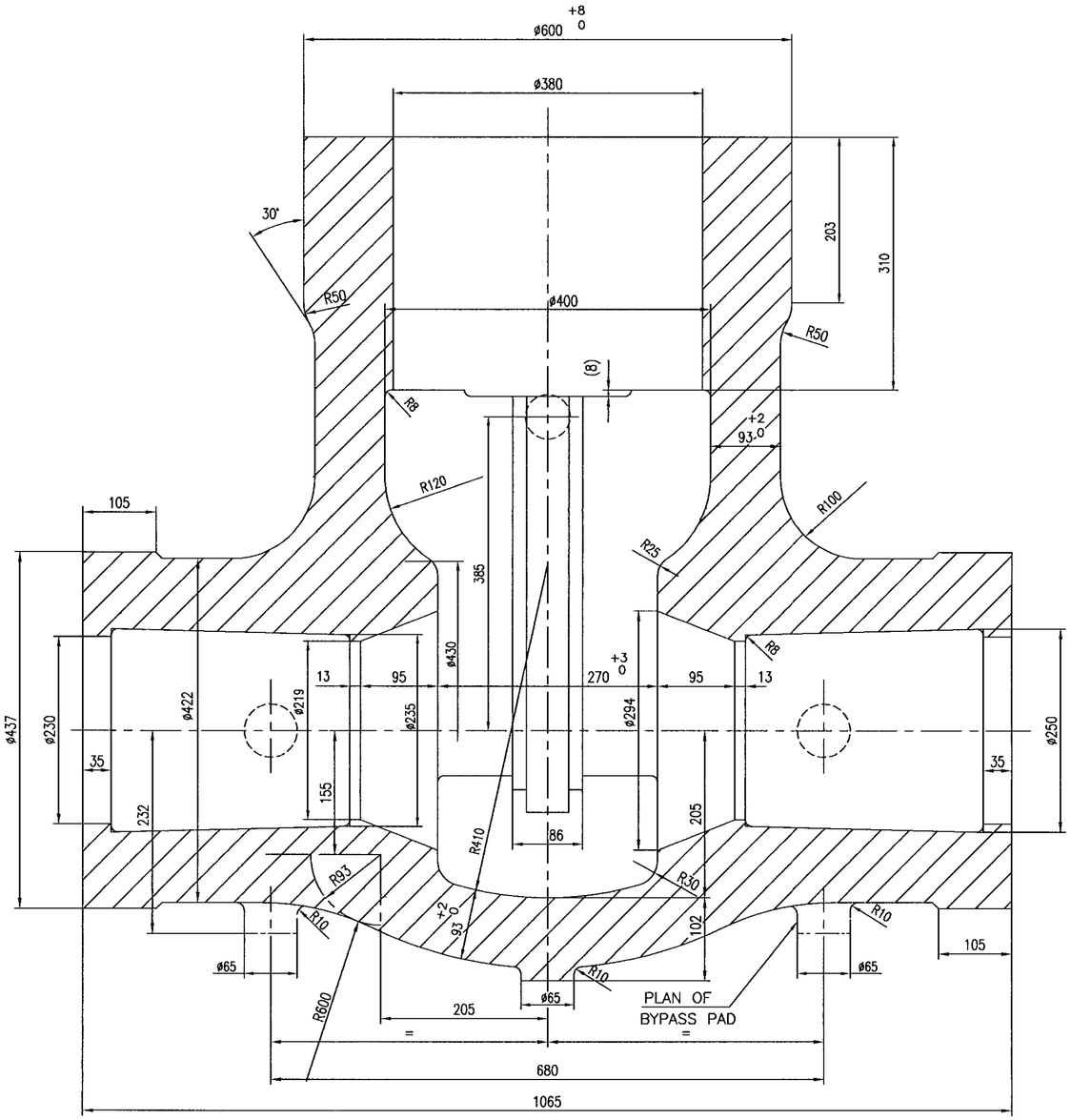

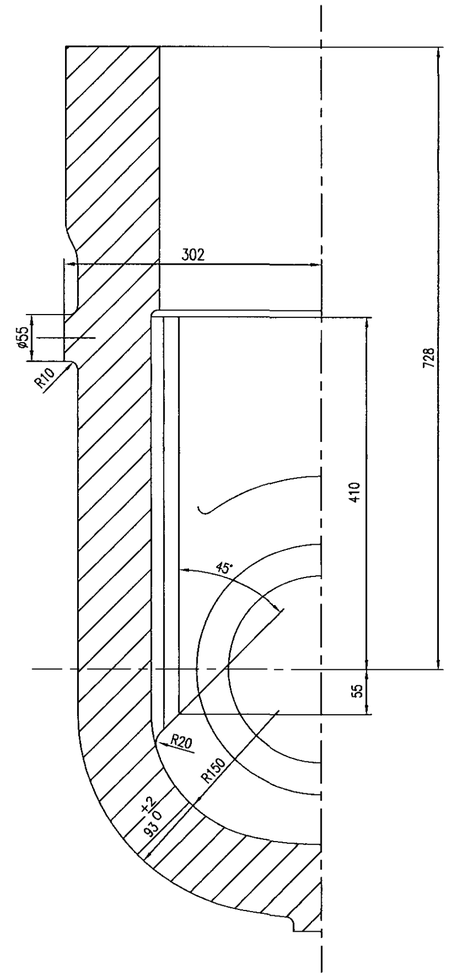

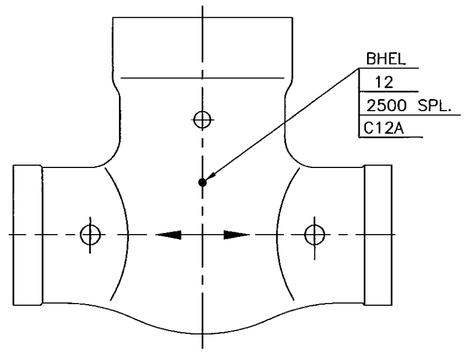

NOTES:-

1. FOR ALL OTHER DETAILS LIKE DIMENSIONAL TOLERANCE, EMBOSSING, ETC REFER LATEST APPLICABLE QUALITY WORK INSTRUCTIONS.
3. THE CASTING IS TO BE SUBJECTED RT/UT ON ALL CRITICAL LOCATIONS.
4. ALL EXTERIOR AND ACCESSIBLE INTERIOR SURFACES OF BODY SHALL BE MPI/LPI TESTED.
5. BY PASS VALVE PADDING SHALL BE PROVIDED ON BOTH SIDES OF THE BODY
6. PRESSURE RELIVEING PAD SHALL BE PROVIDED ON BOTH SIDES OF THE BODY

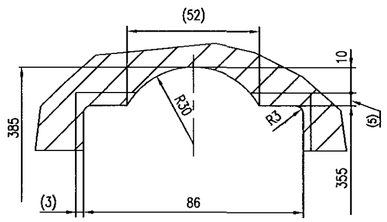

DETAIL-A

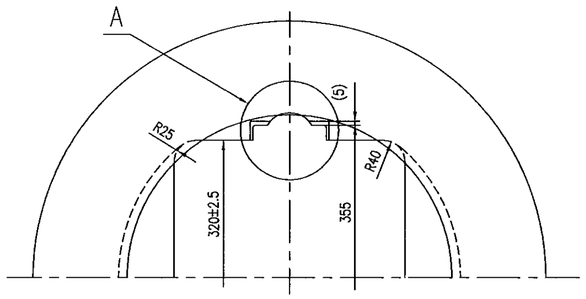

No OFF	DESCRIPTION	MATL CODE	MATL SPECN	HEAT TREATMENT	SCRAP SORT	NET WT (kg)	GROSS WT (kg)	DRAWING No	ITEM No
		921525260000	A217 C12A ATTEST	NT					

TYPE OF PRODUCT
OR NAME OF
CUSTOMER/PROJECT

BHARAT HEAVY ELECTRICALS LTD.,
UNIT: HIGH PRESSURE BOILER PLANT.
TIRUCHIRAPALLI -620014.
365-120

	NAME	SIGN	DATE	NO.OF VAR.
DRN	V.BAIRAVAN		30.08.04	
CHD	K.RAJASEKARAN		30.08.04	
APPD	M.RAJAKUMAR		30.08.04	

DEPT	SCALE	WEIGHT (KG).	REFERENCE INFORMATIONS	NO. OF ITEMS
VL	NTS	1753	CAD REF:T216514R	
CODE 320				

TITLE	CARD CODE	DRAWING NO.	REV
BODY 12"/2500CLASS SPL.	U 01	2-V-V493-16514R	0

REV	DATE	ALTERED
ZONE		CHD & APPD

CAUTION: The information on this document is the property of BHARAT HEAVY ELECTRICALS LTD. It must not be used directly or indirectly in any way detrimental to the interest of the company.

Size A2

DRAWING NO. 2-V-0000-17336R

ALL DIMENSIONS ARE IN MILLIMETRES. FOR TOLERANCES OF UNTOLERANCED DIMENSIONS DURING MANUFACTURE REFER RELEVANT QCP / QP

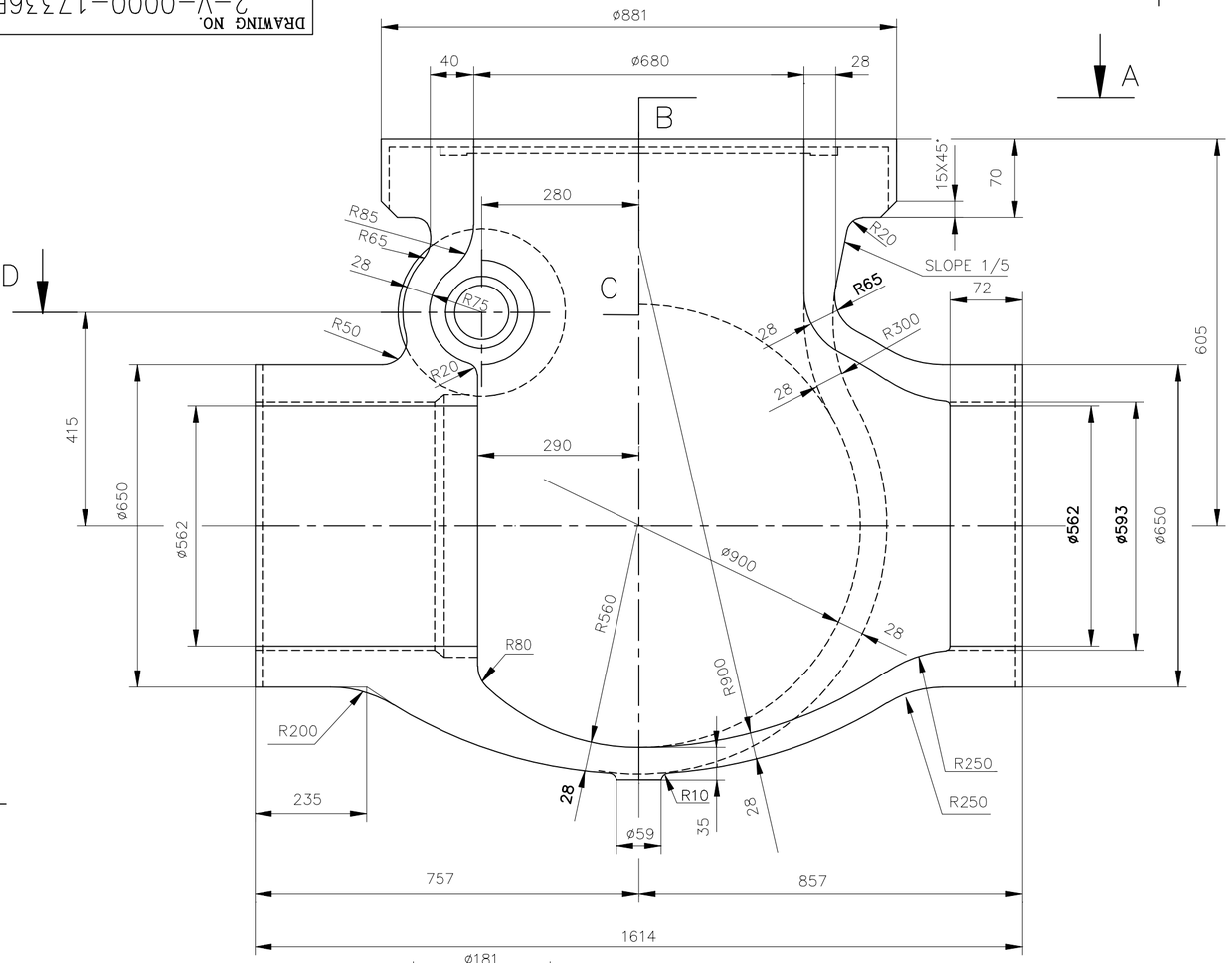

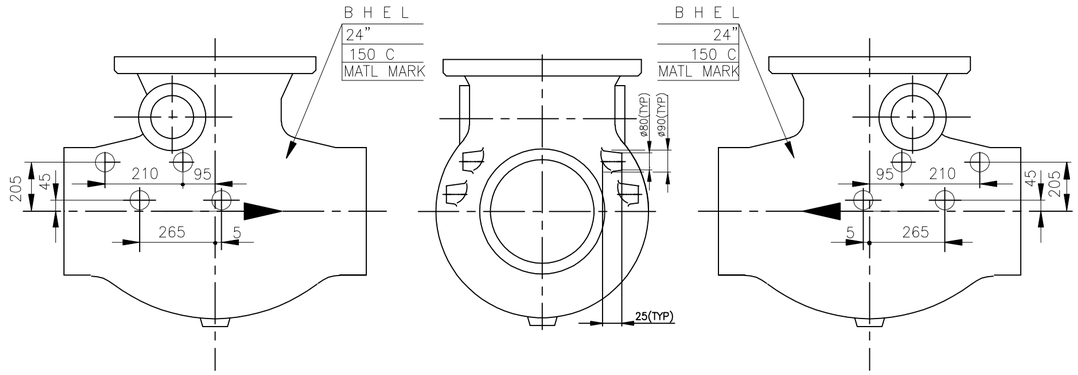

BOSS LOCATION FIG

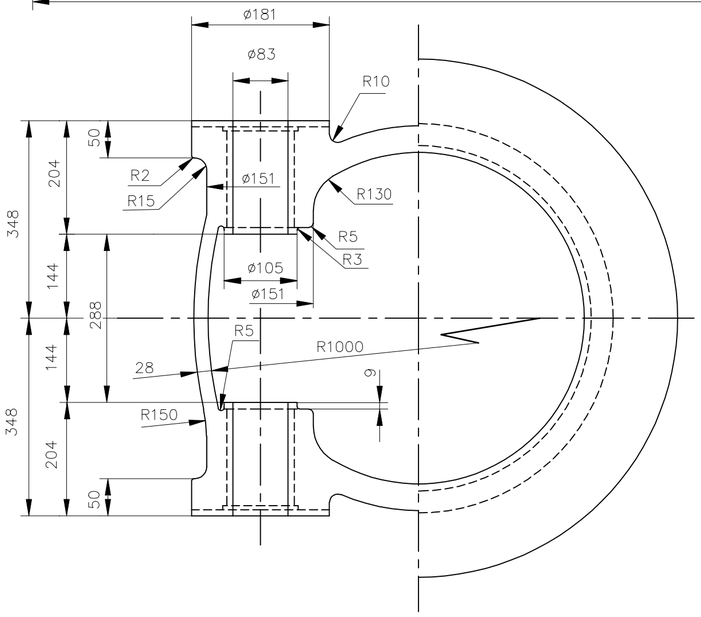

SECTION–ABCD

NOTES:

1. CASTINGS ARE TO BE SUBJECTED TO RT/UT ON ALL CRITICAL LOCATIONS AS PER APPLICABLE LATEST QUALITY PROCEDURES
2. ALL EXTERIOR AND ACCESSIBLE INTERIOR SURFACES OF BODY SHALL BE MPI/LPI TESTED AS PER APPLICABLE LATEST QUALITY PROCEDURES.
3. DOTTED LINE SHOWS FINISH MACHINED CONFIGURATION.
4. FOR ALL OTHER DETAILS LIKE DIMENSIONAL TOLERANCE, EMBOSSING, PUNCHING DETAILS REFER APPLICABLE LATEST QUALITY PROCEDURES.
5. MATERIAL MARK SHOULD BE ON BOTH SIDES

Sl.No.	COMPONENT CODE	DRAWING NUMBER	MATERIAL SPECIFICATION	MATL MARK
02	921526770000	2-V-L633-17336R/00	A217 WC6 ATTEST NT	WC6
01	921526760000	2-V-L632-17336R/00	A216 WCB ATTEST AN	WCB

No OFF	DESCRIPTION	MATL CODE	MATL SPECN	HEAT TREATMENT	SCRAP SORT	NET WT (kg)	GROSS WT (kg)	DRAWING No	ITEM No

REV	DATE	ALTERED
ZONE		CHD & APPD

CAUTION: The information on this document is the property of BHARAT HEAVY ELECTRICALS LTD. It must not be used directly or indirectly in any way detrimental to the interest of the company.

TYPE OF PRODUCT
OR NAME OF
CUSTOMER/PROJECT

BHARAT HEAVY ELECTRICALS LTD.,
UNIT: HIGH PRESSURE BOILER PLANT.
TIRUCHIRAPALLI-620014.
365-120

	NAME	SIGN	DATE	NO.OF VAR.
DRN	V.ARUMUGAM	V.A	11.09.08	
CHD	P.RAMANIKARAN	P.R.K	11.09.08	
APPD	S.NATARAJAN	S.N.R	11.09.08	

DEPT V L
CODE 320
SCALE N.T.S.
WEIGHT (KG). 1450
REFERENCE INFORMATIONS
NO. OF ITEMS

TITLE BODY (600 MM / 150CL) (24" / 150 CL)
CASTING
CARD CODE U 01
DRAWING NO. 2-V-0000-17336R
REV

Size A2

DRAWING NO. 2-V-0000-17335R

ALL DIMENSIONS ARE IN MILLIMETRES. FOR TOLERANCES OF UNTOLERANCED DIMENSIONS DURING MANUFACTURE REFER RELEVANT QCP / QP

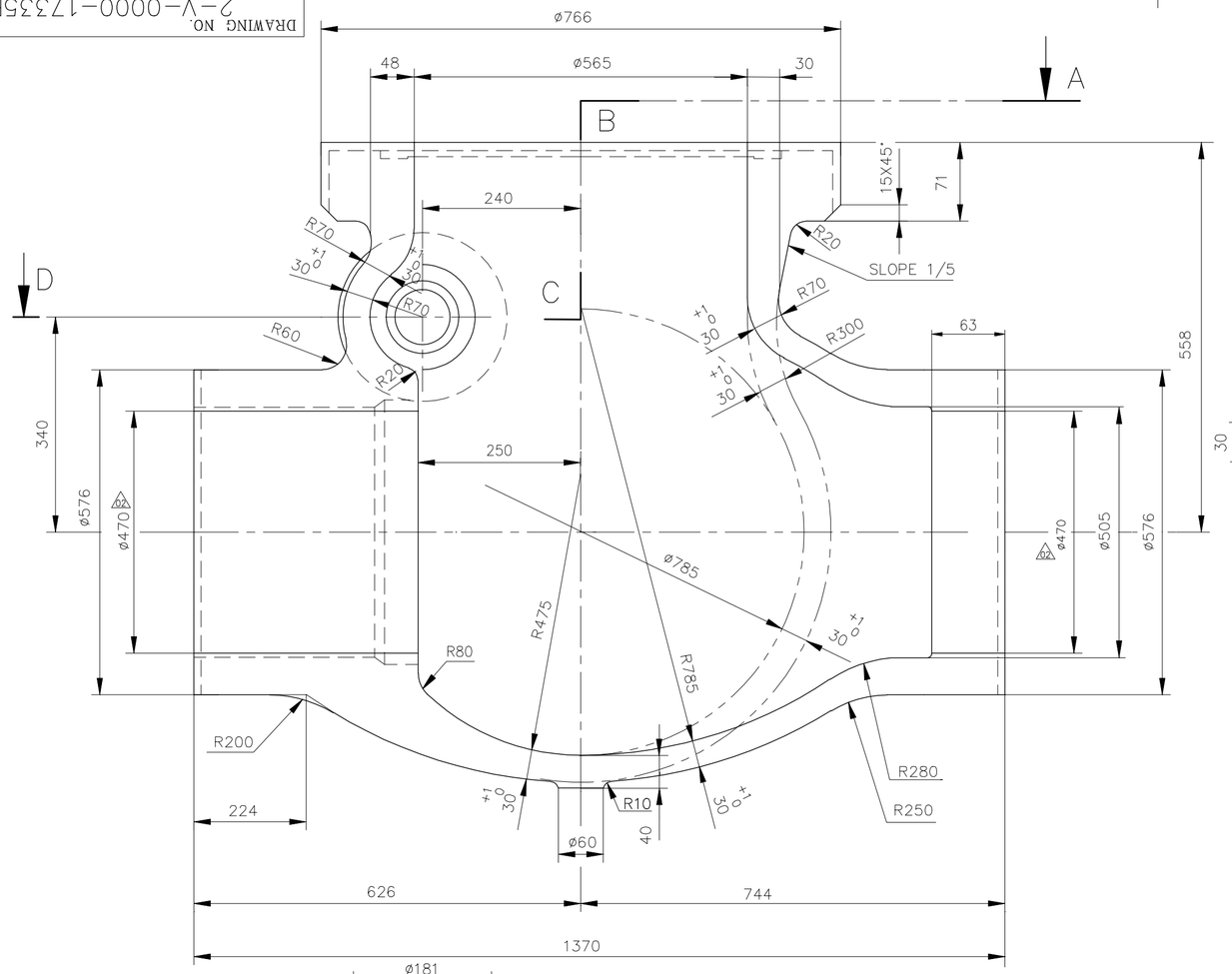

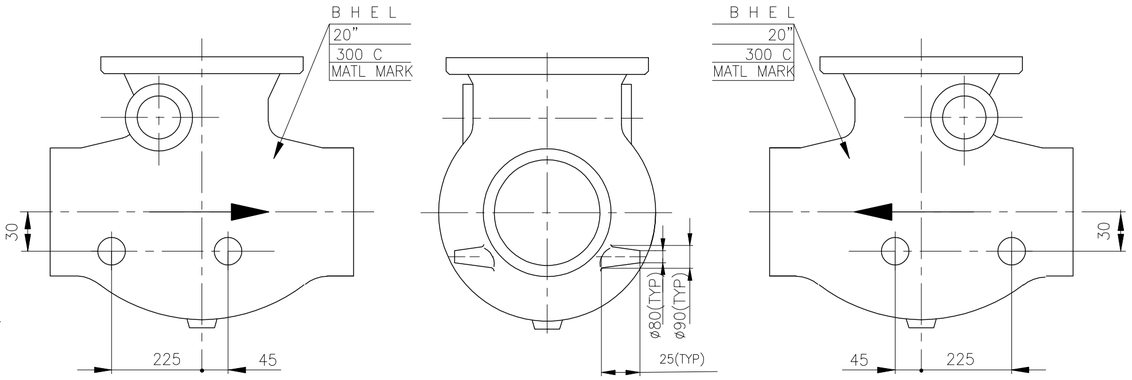

BOSS LOCATION FIG

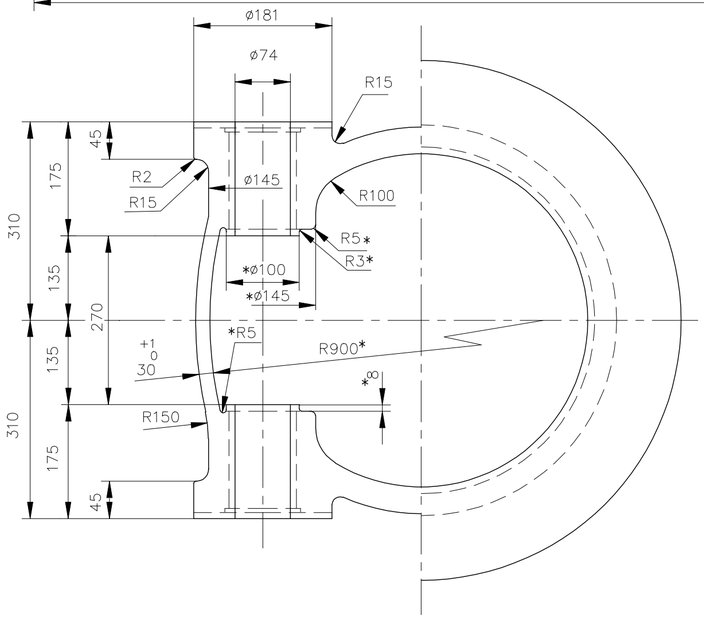

SECTION-ABCD

NOTES:

1. CASTINGS ARE TO BE SUBJECTED TO RT/UT ON ALL CRITICAL LOCATIONS AS PER APPLICABLE LATEST QUALITY PROCEDURES
2. ALL EXTERIOR AND ACCESSIBLE INTERIOR SURFACES OF BODY SHALL BE MPI/LPI TESTED AS PER APPLICABLE LATEST QUALITY PROCEDURES.
3. DOTTED LINE SHOWS FINISH MACHINED CONFIGURATION.
4. FOR ALL OTHER DETAILS LIKE DIMENSIONAL TOLERANCE, EMBOSSING, PUNCHING DETAILS REFER APPLICABLE LATEST QUALITY PROCEDURES.
5. MATERIAL MARK SHOULD BE ON BOTH SIDES
6. " * " MARKED DIMENSIONS ARE CRITICAL AND ARE TO BE ADHEARED TO.

Sl.No.	COMPONENT CODE	DRAWING NUMBER	MATERIAL SPECIFICATION	MATL MARK
04	921527870000	2-V-L482-17335R/00	SA217 WC9 ATTEST NT	WC9
03	921527860000	2-V-L481-17335R/00	SA216 WCC ATTEST AN	WCC
02	921526750000	2-V-L631-17335R/02	SA217 WC6 ATTEST NT	WC6
01	921526740000	2-V-L630-17335R/02	SA216 WCB ATTEST AN	WCB

No OFF	DESCRIPTION	MATL CODE	MATL SPECN	HEAT TREATMENT	SCRAP SORT	NET WT (kg)	GROSS WT (kg)	DRAWING No	ITEM No

REV	DATE	ALTERED	
02	24.09.10	JALAL	CHD & APPD PRK
ZONE	DIMENSIONS ø470 WAS ø457 SL. No. 3 AND 4 ADDED. DCP: 801095		

REV	DATE	ALTERED	
01	08.12.04	PRK	CHD & APPD SNR
ZONE	DIMENSIONS 224, 626, 744, 63 AND 1370 WERE 246, 648, 766, 85 AND 1414. NOTE 6 ADDED. DCP: 800381		

CAUTION: The information on this document is the property of BHARAT HEAVY ELECTRICALS LTD. It must not be used directly or indirectly in any way detrimental to the interest of the company.

TYPE OF PRODUCT
OR NAME OF
CUSTOMER/PROJECT

BHARAT HEAVY ELECTRICALS LTD.,
UNIT: HIGH PRESSURE BOILER PLANT.
TIRUCHIRAPALLI-620014.
365-120

	NAME	SIGN	DATE	NO.OF VAR.
DRN	MPS	MPS	07.09.01	
CHD	PRK	PRK	07.09.01	
APPD	SNR	SNR	07.09.01	

DEPT V L
CODE 320
SCALE N.T.S.
WEIGHT (KG). 1105
REFERENCE INFORMATIONS
NO. OF ITEMS

TITLE: BODY (20" / 300 CLASS)
CARD CODE U 01
DRAWING NO. 2-V-0000-17335R
REV 02

Size A2

DRAWING NO. 2-V-0000-17334R

ALL DIMENSIONS ARE IN MILLIMETRES. FOR TOLERANCES OF UNTOLERANCED DIMENSIONS DURING MANUFACTURE REFER RELEVANT QCP / QP

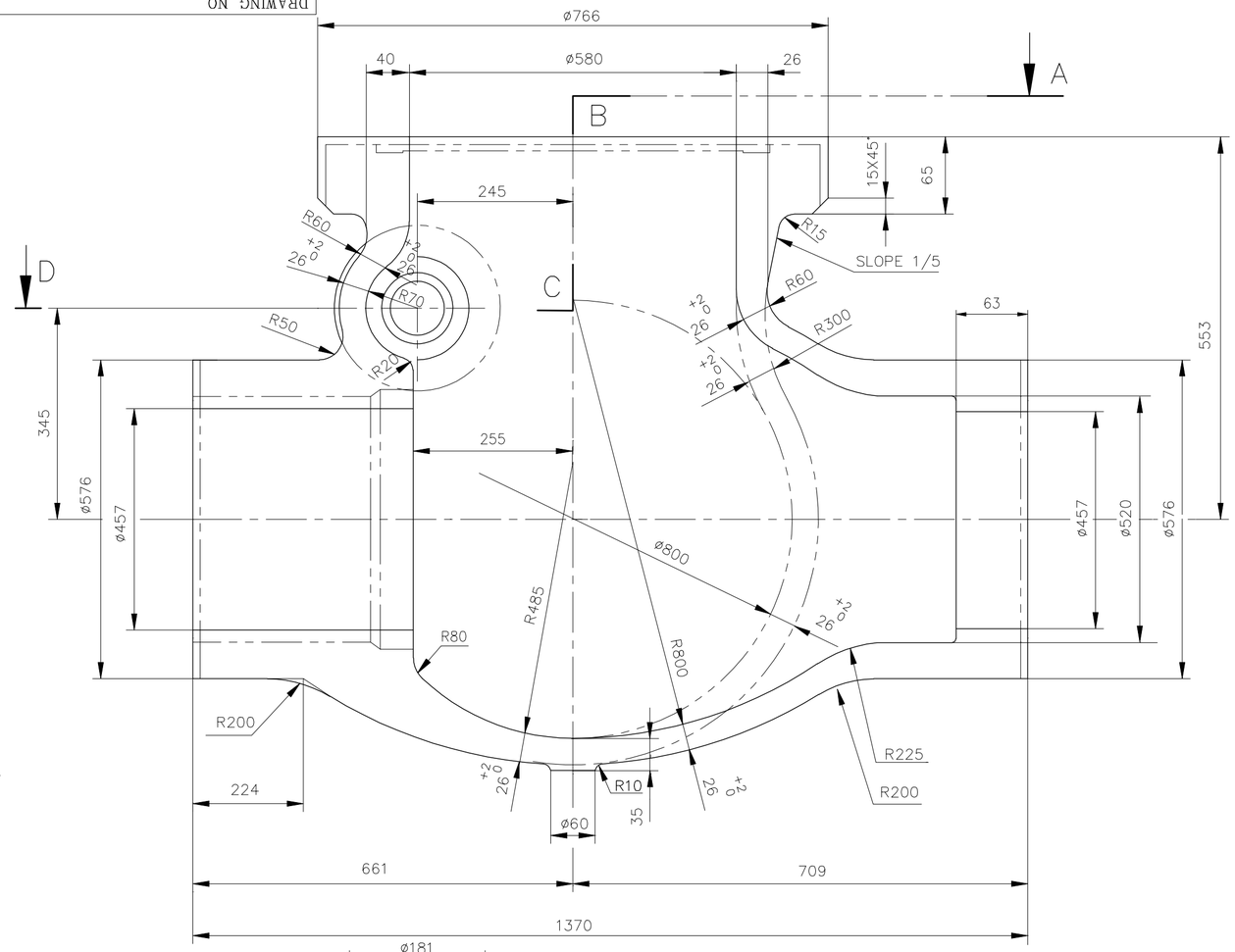

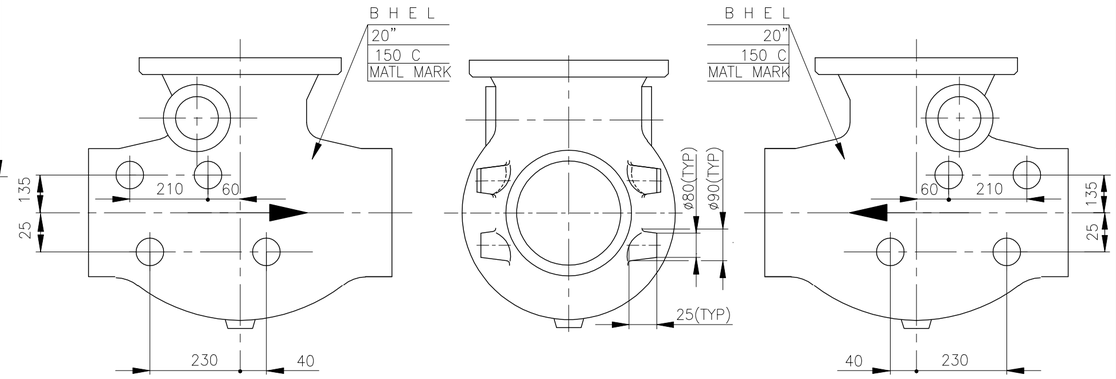

BOSS LOCATION FIG

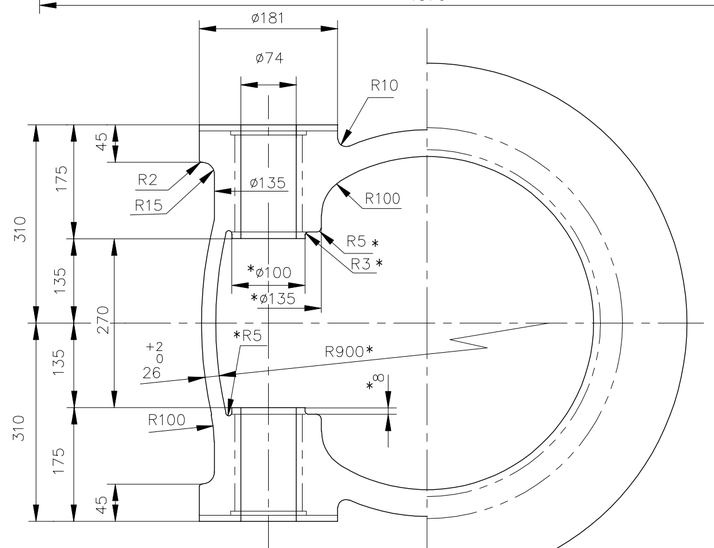

SECTION-ABCD

NOTES:

1. CASTINGS ARE TO BE SUBJECTED TO RT/UT ON ALL CRITICAL LOCATIONS AS PER APPLICABLE LATEST QUALITY PROCEDURES
2. ALL EXTERIOR AND ACCESSIBLE INTERIOR SURFACES OF BODY SHALL BE MPI/LPI TESTED AS PER APPLICABLE LATEST QUALITY PROCEDURES.
3. DOTTED LINE SHOWS FINISH MACHINED CONFIGURATION.
4. FOR ALL OTHER DETAILS LIKE DIMENSIONAL TOLERANCE, EMBOSSING, PUNCHING DETAILS REFER APPLICABLE LATEST QUALITY PROCEDURES.
5. MATERIAL MARK SHOULD BE ON BOTH SIDES
6. " * " MARKED DIMENTIIONS ARE CRITICAL AND ARE TO BE ADHEARED TO.

Sl.No.	COMPONENT CODE	DRAWING NUMBER	MATERIAL SPECIFICATION	MATL MARK
02	921526730000	2-V-L629-17334R/01	SA217 WC6 ATTEST NT	WC6
01	921526720000	2-V-L628-17334R/01	SA216 WCB ATTEST AN	WCB

No OFF	DESCRIPTION	MATL CODE	MATL SPECN	HEAT TREATMENT	SCRAP SORT	NET WT (kg)	GROSS WT (kg)	DRAWING No	ITEM No

REV	DATE	ALTERED	JALAL
02	27.10.10	CHD & APPD	PRK
ZONE	DRAWING REDRAWN		

REV	DATE	ALTERED	PRK
01	08.12.04	CHD & APPD	SNR
ZONE	DIMENTIONS 224, 661, 709, 63, AND 1370 WERE 246, 683, 731, 85 AND 1414. NOTE 6 ADDED. DCP: 800381		

CAUTION: The information on this document is the property of BHARAT HEAVY ELECTRICALS LTD. It must not be used directly or indirectly in any way detrimental to the interest of the company.

TYPE OF PRODUCT OR NAME OF CUSTOMER/PROJECT: QN

BHARAT HEAVY ELECTRICALS LTD.,
UNIT: HIGH PRESSURE BOILER PLANT.
TIRUCHIRAPALLI-620014.
365-120

	NAME	SIGN	DATE	NO.OF VAR.
DRN	MPS	MPS	07.09.01	
CHD	PRK	PRK	07.09.01	
APPD	SNR	SNR	07.09.01	

DEPT V L
CODE 320
SCALE N.T.S.
WEIGHT (KG). 994
REFERENCE INFORMATIONS
NO. OF ITEMS

TITLE: BODY (20" / 150 CLASS) CASTING
CARD CODE U 01
DRAWING NO. 2-V-0000-17334R
REV 02

Size A2

DRAWING NO. 2-V-0000-14683R

ALL DIMENSIONS ARE IN MILLIMETRES. FOR TOLERANCES OF UNTOLERANCED DIMENSIONS DURING MANUFACTURE REFER RELEVANT QCP / QP

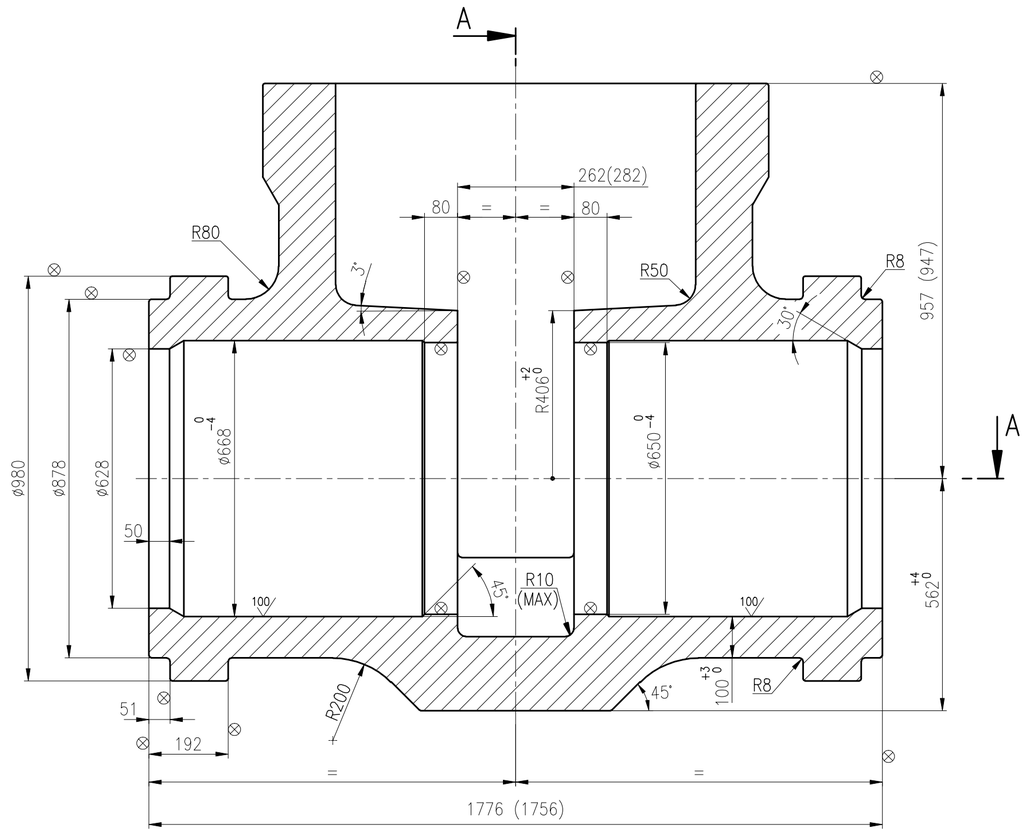

SECTION – BB

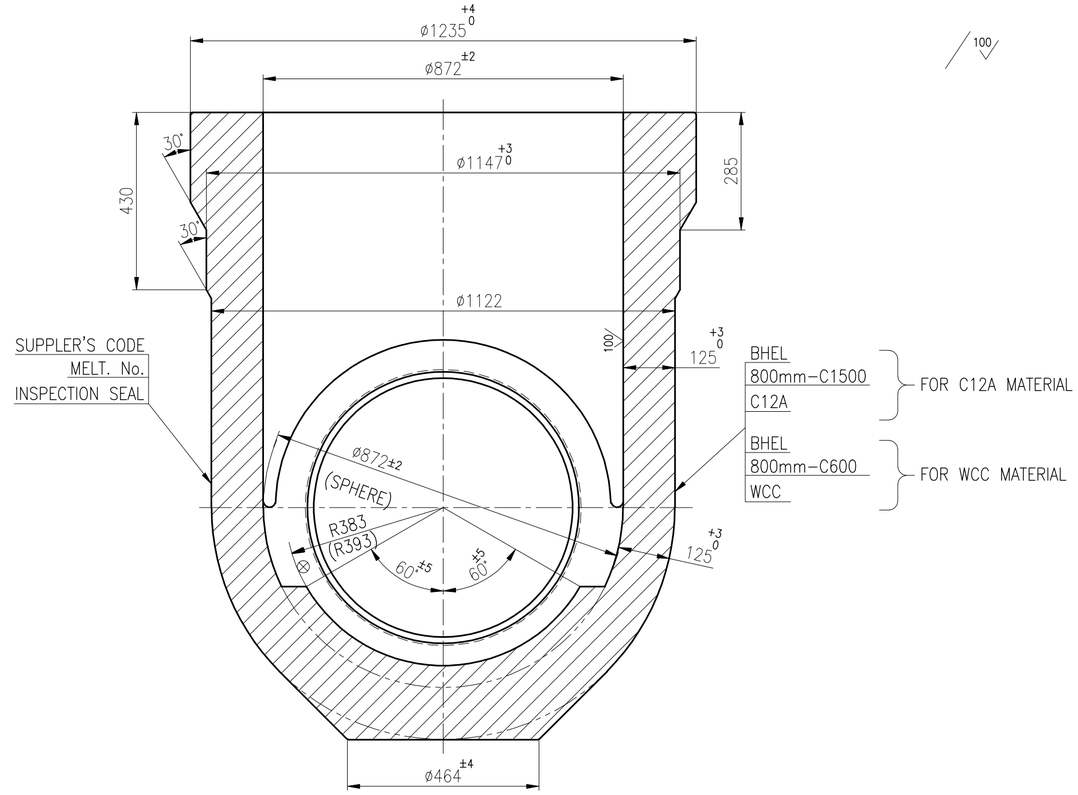

SECTION – CC

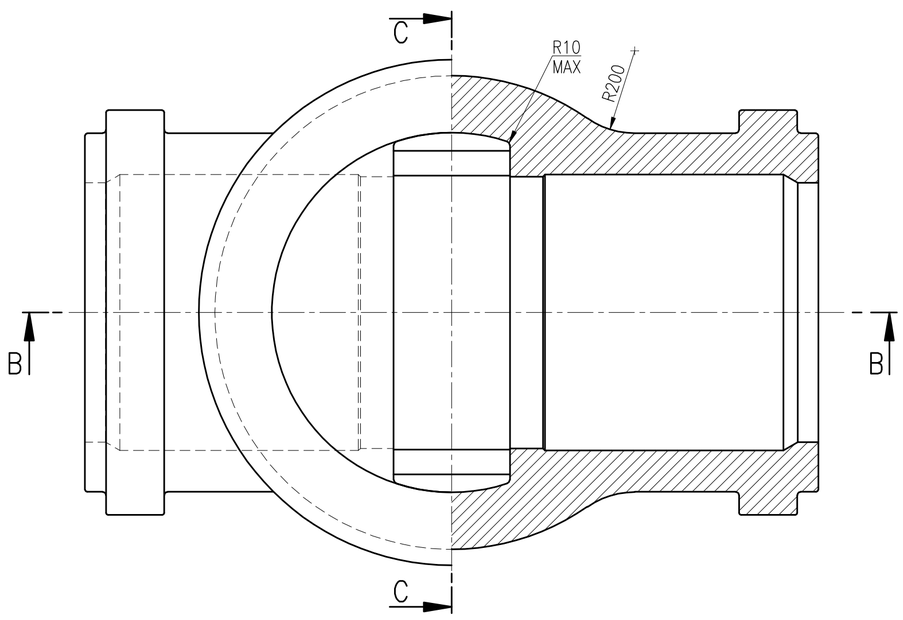

SECTION – AA

NOTES

01. NECESSARY MACHINING ALLOWANCES HAVE BEEN ADDED ON ALL MACHINABLE SURFACES.
02. PERMISSIBLE DEVIATIONS OF NON TOLERANCED CASTING DIMENSIONS REFER APPLICABLE LATEST QUALITY PROCEDURE.
03. FINISH MACHINED DIMENSIONS ARE INDICATED WITHIN BRACKETS FOR INFORMATION ONLY.
04. LETTERS – BHEL, SIZE, MATL. & SUPPLIERS CODE ARE TO BE CAST IN THE INDICATED ZONE.
05. CASTING SHALL COMPLY WITH THE REQUIREMENTS OF APPLICABLE LATEST QUALITY PROCEDURE.
06. UNSPECIFIED CASTING RADII – R3 TO R5 mm.
07. HEIGHT OF CASTING LETTERS – 25 mm.
08. ⊗ INDICATED SURFACES TO BE MACHINED.
09. 100/ INDICATED CASTING SURFACES SHALL BE HIGH QUALITY WITHOUT SURFACE UNEVENNESS.
10. MELT NUMBER AND INSPECTION SEAL ARE TO BE PUNCHED.

SL. No.	DESCRIPTION	MATL CODE	MATL SPECN	HEAT TREATMENT	SCRAP SORT	NET WT (kg)	GROSS WT (kg)	DRAWING No / COMPONENT CODE	ITEM No
02	CASTING	–	ASTM A217 C12A ATTEST	NORMALISED &TEMPERED	–	6800	–	2.V.3319.14683R / 92 202 069 0000	–
01	CASTING	–	ASTM A216 WCC ATTEST	NORMALISED	–	6800	–	2.V.3314.14683R / 92 202 077 0000	–

REV	DATE	ALTERED
		CHD & APPD
ZONE		

CAUTION: The information on this document is the property of BHARAT HEAVY ELECTRICALS LTD. It must not be used directly or indirectly in any way detrimental to the interest of the company.

TYPE OF PRODUCT OR NAME OF CUSTOMER/PROJECT: CS

BHARAT HEAVY ELECTRICALS LTD.
UNIT: HIGH PRESSURE BOILER PLANT.
TIRUCHIRAPALLI -620014.
365–120

	NAME	SIGN	DATE	NO.OF VAR.
DRN	S.KOMALA		21.01.11	
CHD	M.SRINIVASAN		21.01.11	
APPD	M.RAJAKUMAR		21.01.11	

DEPT VL | CODE 320 | SCALE N T S | WEIGHT (KG). 6800 | REFERENCE INFORMATIONS | NO. OF ITEMS

TITLE: BODY CASTING (800mm)

CARD CODE: U 01

DRAWING NO. 2-V-0000-14683R

REV 00

Size A2

DRAWING NO. 2-V-0000-14082R

ALL DIMENSIONS ARE IN MILLIMETRES. FOR TOLERANCES OF UNTOLERANCED DIMENSIONS DURING MANUFACTURE REFER RELEVANT QCP / QP

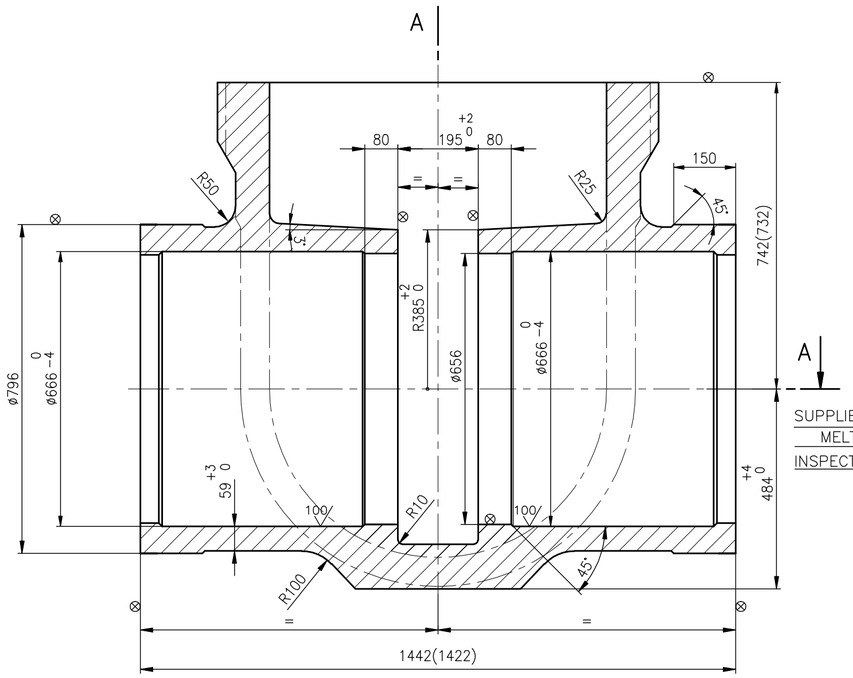

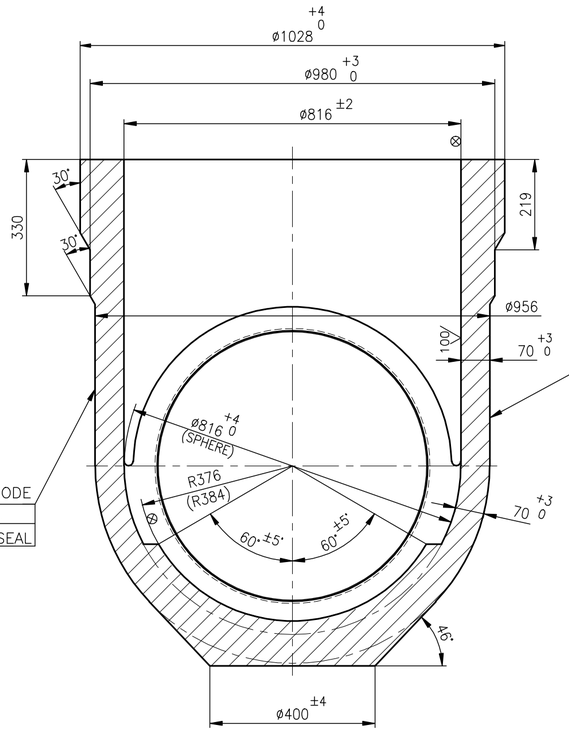

SECTION–CC

BHEL 750MM–C500 WCC	FOR WCC MATL.
BHEL 750MM–C900 WC9	FOR WC9 MATL.
BHEL 750MM–C900 C12A	FOR C12A MATL.

100

NOTE

01. NECESSARY MACHINING ALLOWANCES HAVE BEEN ADDED ON ALL MACHINABLE SURFACES.
02. PERMISSIBLE DEVIATIONS OF NON TOLERANCED CASTING DIMENSIONS REFER APPLICABLE LATEST QUALITY PROCEDURE.
03. FINISH MACHINED DIMENSIONS ARE INDICATED WITHIN BRACKETS FOR INFORMATION ONLY.
04. LETTERS– BHEL,SIZE,MATL.& SUPPLIERS CODE ARE TO BE CAST IN THE INDICATED ZONE.
05. CASTING SHALL COMPLY WITH THE REQUIREMENTS OF APPLICABLE LATEST QUALITY PROCEDURE.
06. UNSPECIFIED CASTING RADII = R3 TO R5
07. HEIGHT OF CASTING LETTERS = 25 mm
08. ⊗ INDICATES SURFACE TO BE MACHINED.
09. 100 INDICATED CASTING SURFACES SHALL BE OF HIGH QUALITY WITHOUT SURFACE UNEVENNESS.
10. IT SHALL BE ENSURED THAT THE TEMPLATE AS PER DRG. No. 4–V–3245–26701 ENTERS FREELY FROM THE TOP OF THE BODY AND RESTS ON THE PAD OF R376 WITHOUT ANY INTERFERENCE.

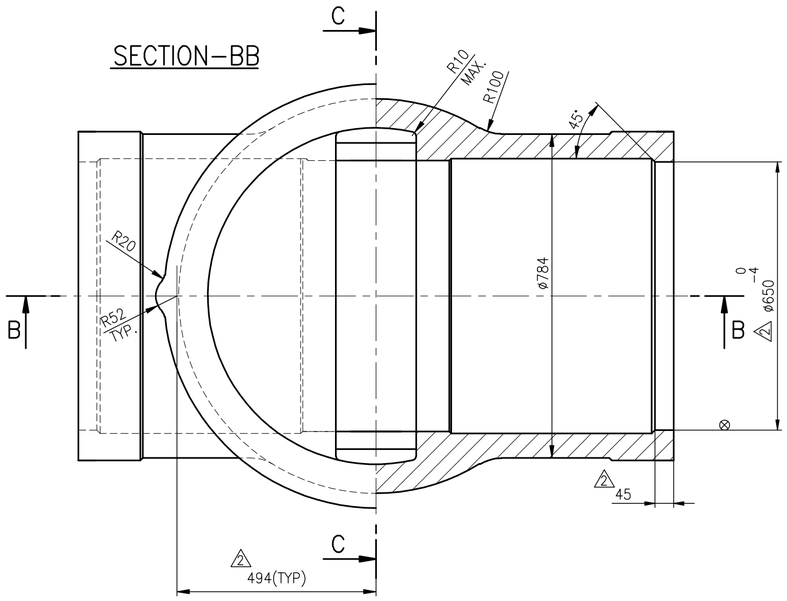

SECTION–BB

SECTION–AA

SL. No.	DESCRIPTION	MATL CODE	MATL SPECN	HEAT TREATMENT	SCRAP SORT	NET WT (kg)	GROSS WT (kg)	DRAWING No / COMPONENT CODE	ITEM No
03	CASTING	92 201 874	ASTM A217 C12A–ATTEST	NORMALISED &TEMPERED	–	2785	–	2V331614082R/1 922018740000	–
02	CASTING	92 201 640	ASTM A217 WC9–ATTEST	NORMALISED &TEMPERED	–	2785	–	2V324514082R/2 922016400000	–
01	CASTING	92 201 873	ASTM A216 WCC–ATTEST	NORMALISED	–	2785	–	2V331514082R/1 922018730000	–

REV	DATE	ALTERED M.SRINIVASAN	REV	DATE	ALTERED M.SRINIVASAN
02	09.09.11	CHD & APPD M.RAJAKUMAR	01	02.11.09	CHD & APPD M.RAJAKUMAR
2	DIMENSION ø650, 45 & 494 WERE ø570, 300 & 482 RESPLY. DCP: 801226		ZONE	DIMENSION ø828 & 295 REMOVED DRAWING Nos. 2.V.3315.14082R AND 2.V.3316.14082R INCLUDED.	

CAUTION: The information on this document is the property of BHARAT HEAVY ELECTRICALS LTD. It must not be used directly or indirectly in any way detrimental to the interest of the company.

TYPE OF PRODUCT
OR NAME OF
CUSTOMER/PROJECT

BHARAT HEAVY ELECTRICALS LTD.,
UNIT: HIGH PRESSURE BOILER PLANT.
TIRUCHIRAPALLI -620014.
365–120

	NAME	SIGN	DATE	NO.OF VAR.
DRN	M.SRINIVASAN		07.03.07	
CHD	P.BOOMINATHAN		07.03.07	
APPD	M.RAJAKUMAR		07.03.07	

DEPT VL
CODE 320
SCALE NTS
WEIGHT (KG). REF. TABLE
REFERENCE INFORMATIONS CAD: F214082R
NO. OF ITEMS

TITLE BODY (750mm)
CARD CODE U 01
DRAWING NO. 2–V–0000–14082R
REV 02

Size A2

TP-DG-1-V-0000-05194R
CORPORATE DRG ID

DRAWING NO. 1-V-0000-05194R/1

ALL DIMENSIONS ARE IN MILLIMETRES. FOR TOLERANCES OF UNTOLERANCED DIMENSIONS DURING MANUFACTURE REFER RELEVANT QCP/QP

SECTION AA

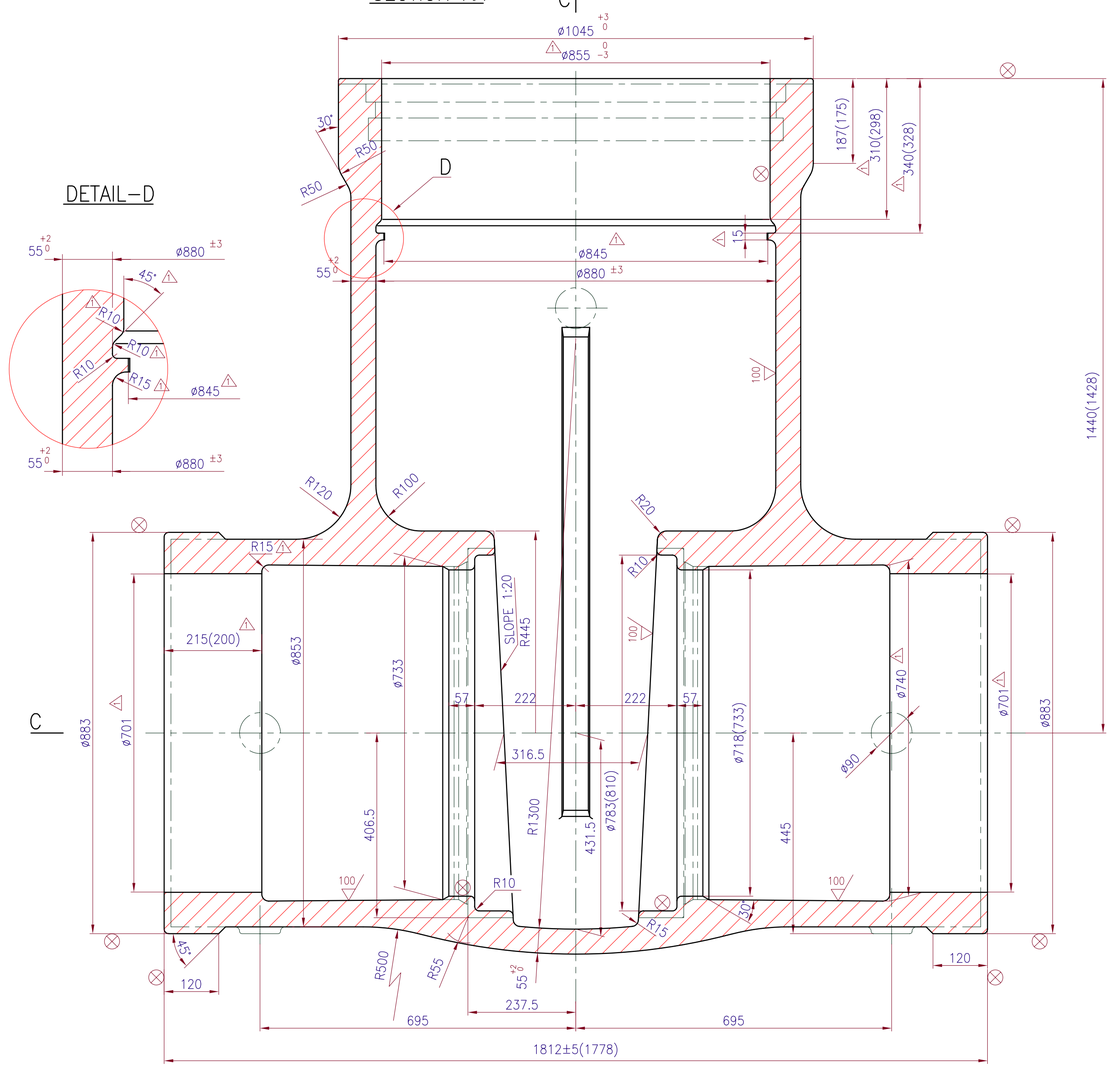

DETAIL–D

SECTION BB

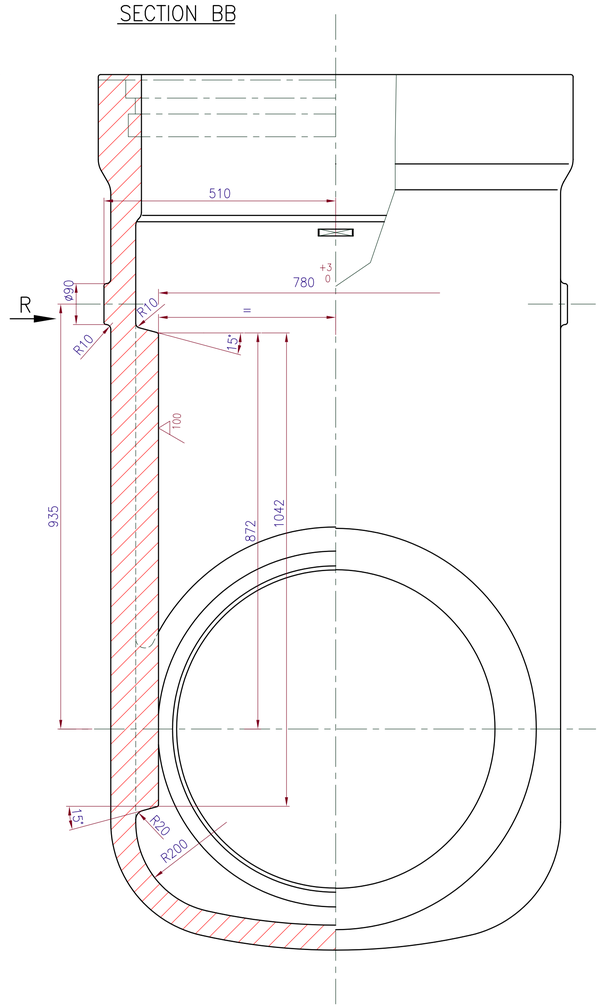

MARKING DETAILS ON CASTING

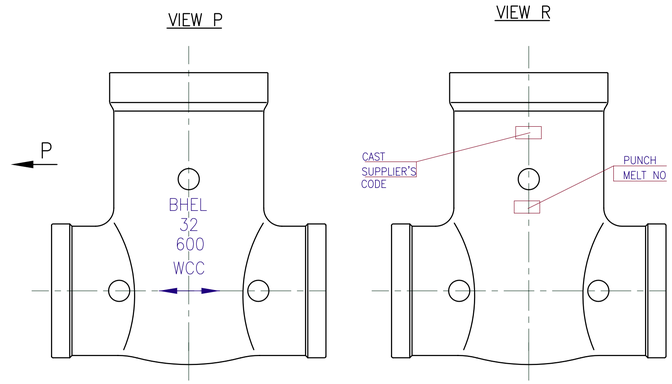

NOTES:–

1. NECESSARY MACHINING ALLOWANCES HAVE BEEN ADDED IN THIS DRAWING ON ALL MACHINABLE SURFACES.
2. FOR THE PERMISSIBLE DIMENSIONAL DEVIATIONS OF NONTOLERANCED CASTING DIMENSIONS REFER LATEST APPLICABLE QUALITY WORK INSTRUCTION
3. ⊗ – SYMBOL INDICATES THE SURFACES WHICH ARE TO BE FURTHER MACHINED
4. 100/▽ – INDICATES THE CASTING SURFACES WHICH MUST BE OF HIGH QUALITY WITHOUT SURFACE UNEVENNESS.
5. UNSPECIFIED CASTING RADII–R5 MAX.
6. HEIGHT OF CASTING LETTERS 40mm
7. FINISH–MACHINED DIMENSIONS ARE INDICATED WITH IN BRACKETS ARE FOR INFORMATION ONLY.
8. BYPASS AND PR.REL. PADDING SHOULD BE PROVIDED ON BOTH SIDES OF THE BODY
9. PUNCHING DETAILS SHALL BE MARKED ONLY ON RAISED FLAT SURFACE GIVEN ON ZONE C–11.

SECTION CC

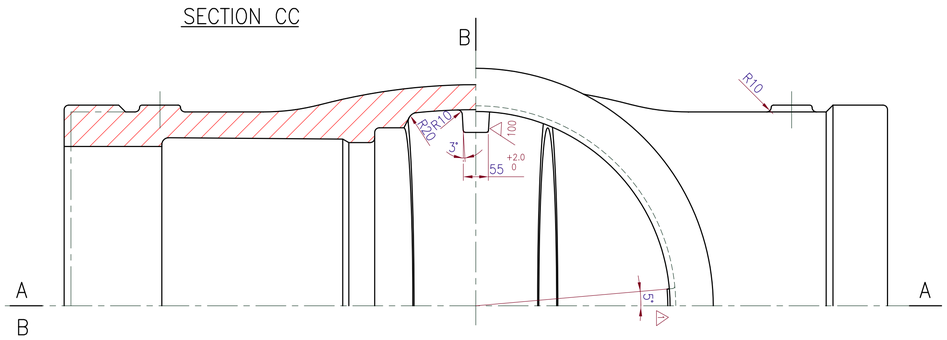

SL. No.	DRAWING No.	MATL. SPECN.	COMP. CODE	HEAT TREATMENT	SCRAP SORT	GROSS WT(Kg)	NET WT(Kg)
01	1–V–NA06–05194R/1	ASTM A216–WCC ATTEST	922014120000	NR		4115	

No OFF	DESCRIPTION	MATL CODE	MATL SPECN	HEAT TREATMENT	SCRAP SORT	NET WT (kg)	GROSS WT (kg)	DRAWING No	ITEM No

TYPE OF PRODUCT
OR NAME OF
CUSTOMER/PROJECT

BHARAT HEAVY ELECTRICALS LTD.,
UNIT: HIGH PRESSURE BOILER PLANT.
TIRUCHIRAPALLI–620014.

	NAME	SIGN	DATE
DRN	V.BAIRAVAN		20.12.03
CHD	R.L.NARAYANAN		20.12.03
APPD	M.RAJAKUMAR		20.12.03

DEPT VL
CODE 320
SCALE N T S
WEIGHT (KG).
REFERENCE INFORMATIONS
CAD REF: 1V005194

TITLE: BODY 32"/600 CLASS
CARD CODE: U 01
DRAWING NO. 1–V–0000–05194R
REV 1

REV	DATE	ALTERED VB
1	13.04.05	CHD & APPD MRK

DIMENSIONS 340, 15, ø845, R15 & 5° INCLUDED. DETAIL–D INCLUDED
DIMENSIONS 310(298),215(200), ø855 0 -3,R10 ø740, ø701 & 45° WERE 342(330), 110, ø850 0 -3,R20,ø741,ø700 & 30°. DCP No.800435

CAUTION: The information on this document is the property of BHARAT HEAVY ELECTRICALS LTD. It must not be used directly or indirectly in any way detrimental to the interest of the company.

Size A1

TP-DG-1-V-0000-05194R
CORPORATE DRG ID