THE INFORMATION ON THIS DOCUMENT IS THE PROPERTY OF BHARAT HEAVY ELECTRICALS LIMITED
IT MUST NOT BE USED DIRECTLY OR INDIRECTLY IN ANY WAY DETRIMENTAL TO THE INTEREST OF THE COMPANY

DRG NO 3 499 70 00027

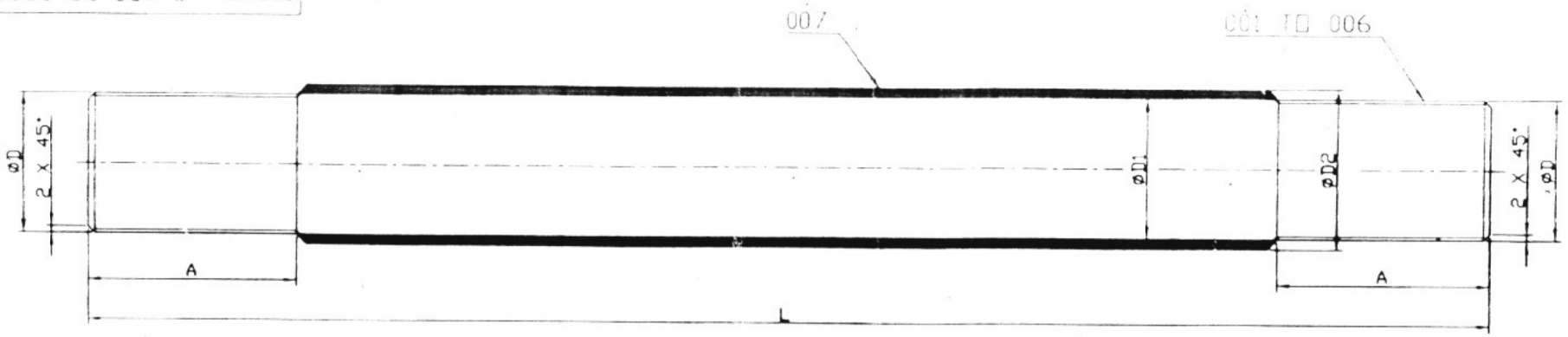

TABLE OF DIMENSIONS						
VAR NO.	ØD1	SIZE ØD	ØD2	A	L	REFER ~~TO A.B.S.V.~~ DRG.
00	16	M16	19	33	REFER W.D.	3 456 70 00006
01	20	M20	23	37	REFER W.D.	3 499 70 00010 3 456 70 00007
02	24	M24	27	40	REFER W.D.	3 499 70 00011 3 456 70 00008
03	30	M30	34	48	REFER W.D.	3 499 70 00014 3 457 70 00009
04	36	M36	40	55	REFER W.D.	3 499 70 00070 3 457 70 00010
05	42	M42	48	64	REFER W.D.	3 499 70 00008 3 457 70 00005
06	36	M36	48	55	REFER W.D.	—

NOTES TO SHOP :-

1. ITEMS 001 TO 006 IS TO BE INSULATED BY IT. 007 AS PER CLAUSE 2 OF TR 10143C.
2. FOR ITS. 001 TO 006 RUST / SCALE / GREASE ETC. IF ANY TO BE REMOVED COMPLETELY BY THE SUPPLIER BY TURNING OR ANY OTHER APPROVED METHOD BEFORE PUTTING INSULATION.
3. INSULATED STUDS ARE TO BE TESTED AS PER SL. NO 2.5.2 OF TR 10143C. (i.e. VAR.00 TO 02 AT 4 KV. VAR.03 & 04 AT 5 KV. VAR.05 AT 8 KV. VAR.06 AT 16 KV.) FOR 1 MINUTE.
4. THREADED PORTION OF BOLTS TO BE COATED WITH ONE COAT OF CHEMICAL RESISTING VARNISH TO BP 275/7 TO AVOID RUSTING.
5. THE OUT OF STRAIGHTNESS FOR IT. 001 TO 006 AFTER MACHINING SHALL BE UP TO ±1mm MAX. SUPPLIER SHALL ENSURE ABOVE BEFORE PUTING THE INSULATION.
6. THREADS - PITCH - COARSE TO IS : 4218 (PT-2)
   TOLERANCE QUALITY - MEDIUM
   TOLERANCE CLASS - 6H
7. FOR B.O.M. REFER COMP BOM NO. 3 499 70 00027
8. RAW MATERIAL OF THE YOKE BOLTS SHALL BE EN-24 IN T CONDITION

NOTES TO DRAUGHTSMAN :-

1. VAR. 04 IS FOR 2 KV & VAR. 06 IS FOR 10 KV ISOLATION REQUIREMENT
2. CALL VAR. 06 OF THIS DRG IN PLACE OF DRG NO. 3 454 0000085 FOR FUTURE JOBS.

REV	DATE			
08	26.10.05	ALTERED	S.D.MISHRA	
		CHECKED	A.K.PARANJPE	
		APPROVED	S.G.JOKARE	

ZONE: NOTE NOS. 1, 2, 3 & 5 MODIFIED. VAR. 06 ADDED IN TABLE OF DIMNS. NOTE NO. 7 & NOTE TO D/M ADDED.

REV	DATE			
07	18.08.00	ALTERED	N.J.P	-SD-
		CHECKED	J.S.K	-SD-
		APPROVED		

ZONE: NOTE NO.-6 ADDED

REV	DATE			
06	28.08.97	ALTERED		-SD-
		CHECKED		-SD-
		APPROVED		-SD-

ZONE: NOTE TO SHOP NO.-3 MODIFIED.

REV	DATE			
05	28.04.93	ALTERED	H.K.K.	-SD-
		CHECKED	B.S.B	-SD-
		APPROVED	S.N.A	-SD-

ZONE: IN NOTE-1 DRG NO. WERE C600973 (BC-7-3) & C600974 (BC-7-4) NOTE-5 ADDED IN TABLE OF DIMS. VAR.04 DRG NO 34997000070 WAS NOT ON.

REV	DATE			
04	05.07.89	ALTERED	SURI	-SD-
		CHECKED	B.S.B	-SD-
		APPROVED		

ZONE: IT 001 WAS TO BP 10501 NOTE-4 COATING WAS DIFFERENT. IN TABLE DIM. 33 WAS 30, 37 WAS 35, 55 WAS 57, 64 WAS 67. IT. 007 WAS 0.125 TK

REV	DATE			
09	22 08 12	ALTERED		-SD-
		CHECKED		-SD-
		APPROVED		-SD-

ZONE: MATERAL OF THE YOKE BOLT CHANGED TO EN24 AND PC 8.8 OF IS1367 UPDATED IN BOM

ADDITIONAL INFORMATION: STD.

STATUS OF DRAWING: U

DISTRIBUTION OF PRINTS

D/C	TRM	TCX (TR)	JHANSI
1	3	1	2

3. माप का प्रकार या ग्राहक / परियोजना का नाम
TYPE OF PRODUCT OR NAME OF CUSTOMER/PROJECT: TRANSFORMER

भारत हेवी इलेक्ट्रिकल्स लिमिटेड भोपाल
BHARAT HEAVY ELECTRICALS LTD BHOPAL

	NAME	SIGN	DATE
DRN	SURI T.R.	-SD-	12.09.81
CHK	SPV	-SD-	15.09.81
APP			

VAR 06

RCPT. TRL
CODE 406

SCALE NTS

WEIGHT(kg)

REF TO ASSY DRG

ITEM 08

शीर्षक / TITLE: INSULATED YOKE BOLTS

DRAWING NO. 3 499 70 00027

REV 09

शीट 01 / शीटों की कुल संख्या 01

REF. BC 7-1

Comp. drg.

COPYRIGHT AND CONFIDENTIAL
The Information on this document is the property of BHARAT HEAVY ELECTRICALS LIMITED. It must not be used directly or indirectly in any was detrimental to the interest of the Company.

शीर्षक TITLE: TOP YOKE CLAMPING ARRANGEMENT .

1.0 YOKE BOLT SIZES –

TOP YOKE CLAMP WILL BE OF BOX TYPE OR CHANNEL TYPE CONSTRUCTION. NORMALLY TWO YOKE BOLTS PER WINDOW WILL BE USED. BOTH THE ENDS OF YOKE CLAMP WILL BE TIED WITH THE HELP OF TIE RODS OR TIE PLATES. DEPENDING UPON THE HEIGHT OF YOKE, YOKE BOLT SIZES WILL BE AS GIVEN BELOW:-

YOKE BOLT SIZE mm	MAIN YOKE HEIGHT IN mm 3-LIMB OR S C CORE	MAXIMUM ALLOWED YOKE BOLT PITCH mm
* 16	250	400
* 20	251 - 400	400
24	401 - 600	400
30	601 - 750	500
36	601 - 750	700
42	601 - 750	950

* NON PREFERRED SIZES

YOKE BOLT SIZE mm	MAIN YOKE HEIGHT IN mm 5-LIMB OR S M CORE	MAXIMUM ALLOWED YOKE BOLT PITCH mm
24	300 - 460	500
30	350 - 450 451 - 550	800 650
36	350 - 450 451 - 550 551 - 650	1200 950 800
42	350 - 450 451 - 550 551 - 650 651 - 750	1600 1300 1100 950

पुन:Rev. 05 दि. Dt. 10/06/21	SHEET REAFFIRMED. RASHMI NITIN NKM	वितरण DISTRIBUTION. TRE/TRM/FBM TCX(TR)/TTX TTG/QC/QA TSD/ JHANSI 5	सं.	स्वीकृत किया : APPROVED : BSB SCB
पुन:Rev. 04 दि. Dt. 14/01/14	SHEET REAFFIRMED. ARVIND S.K.G. A.DEOTA			तैयार किया PREPD. SD; जारी किया ISSUED टीआरई/मानक TRE/STD.; दिनांक DATE 22.6.91

शीर्षक TITLE – TOP YOKE CLAMPING ARRANGEMENT .

NOTE :- 1. IF PITCH REQUIRED IS MORE THEN THE MAXIMUM ALLOWED. THEN 3 YOKE BOLTS / WINDOW WILL BE USED.

2. NORMALLY CFB SHOULD BE = MAXIMUM LEG PACKET WIDTH / 2 + 100

2.0 YOKE CLAMP BOLT INSULATIONS

THE BOLTS USED FOR CLAMPING THE TOP YOKE WILL BE INSULATED BY WRAPPING FIBER GLASS TAPE / CLOTH. A THICKNESS OF 1.5 TO 6.0 MM AS PER THE DETAILED GIVEN BELOW.

2.1 TURN THE BOLT TO SIZE AND DIMENSION AND REMOVE THE RUST / SCALE IF ANY FROM THE SURFACE TO BE INSULATED. FINISHING CUT TO BE GIVEN WITHOUT USING THE OIL MIXED COOLANT. OTHERWISE THE SURFACE SHOULD BE DEGREASED WITH TRICHLORO ETHYLENE. (AA 56706)

2.2 PREPARE A MIX OF SUITABLE EPOXY / POLYESTER RESIN SYSTEM OF TAMPE-RATURE INDEX E. THE RESIN SYSTEM MAY EITHER BE COLD OR HOT CURING TYPE.

2.3 APPLY A THICK COAT OF THE MIXED RESIN BY BRUSH ON THE BOLT SURFACE. WRAP THE GLASS TAPE / CLOTH TIGHTLY, OBTAIN THE REQUIRED THICKNESS BY COATING AND WRAPPING ALTERNATELY. CURE IT AT THE DESIRED TEMP. & TIME AS PER THE RESIN SYSTEM USED.

2.4 FINISH THE INSULATION SURFACE AND THE ENDS BY TURNING TO MAINTAIN THE O.D. AND LENGTH OF INSULATION.

2.5 THE INSULATION OF THE YOKE BOLTS SHOULD BE TESTED FOR ELECTRICAL STRENGTH AS FOLLOWS:

2.5.1 WRAP A METAL FOIL OVER THE INSULATION. THIS FORMS ONE ELECTRODE WHILE THE BOLT FORMS THE OTHER.

2.5.2 APPLY 50 HZ POWER FREQUENCY VOLTAGE BETWEEN THE ELECTRODES FOR 1 MINUTE AS PER TABLE BELOW. IT SHOULD NOT BREAKDOWN AT THIS.

NOMINAL INSULATION THICKNESS (RADIAL) MM	ONE MINUTE WITHSTAND VOLTAGE (kV)
1.5	4.0
2.0	5.0
2.5	6.0
3.0	8.0
6.0	16.0

2.5.3 THE ABOVE TESTS SHOULD BE CARRIED OUT ON ALL THE BOLTS.

REF. BC 7-1 Comp. drg.

COPYRIGHT AND CONFIDENTIAL
The Information on this document is the property of BHARAT HEAVY ELECTRICALS LIMITED. It must not be used directly or indirectly in any was detrimental to the interest of the Company.

पुन:Rev. 05 दि. Dt. 10/06/21	SHEET REAFFIRMED. RASHMI NITIN NKM	वितरण DISTRIBUTION.	सं.	स्वीकृत किया : APPROVED : BSB SCB
पुन:Rev. 04 दि. Dt. 14/01/14	SHEET REAFFIRMED. ARVIND S.K.G. A.DEOTA	TRE/TRM/FBM TCX(TR)/TTX TTG/QC/QA TSD/ JHANSI	6	तैयार किया PREPD. SD; जारी किया ISSUED टीआरई/मानक TRE/STD.; दिनांक DATE 22.6.91

बीएचईएल BHEL Form No. 2038	उत्पाद मानक परिणामित्र / शॉप /आ.का. निर्देश	PRODUCT STANDARD TRANSFORMER / SHOP/DO INSTRUCTION	**TR10143C** 5 पृष्ठों में 3 / PAGE 3 OF 5

REF. BC 7-1 | Comp. drg.

शीर्षक TITLE – TOP YOKE CLAMPING ARRANGEMENT .

TOP YOKE OF THE CORE WILL BE CLAMPED AS PER THE ARRANGEMENT GIVEN BELOW. DIMENSIONS OF THE ITEM FOR VARIOUS BOLT SIZES ARE GIVEN ON SHT.
(PAGE 5 OF 5)

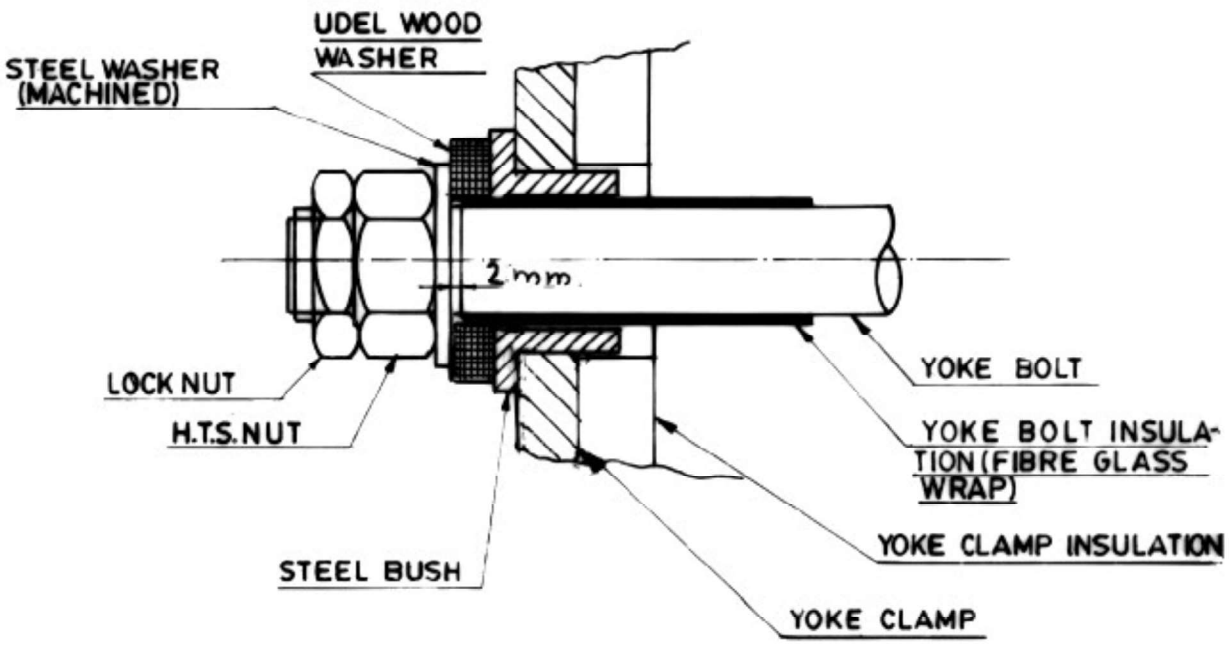

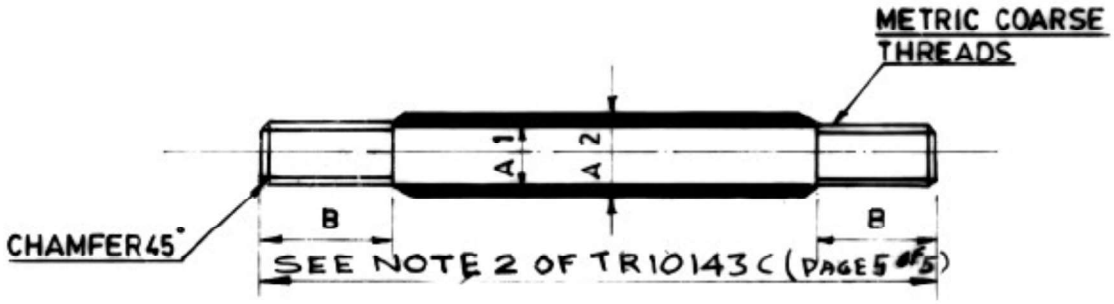

YOKE BOLT

COPYRIGHT AND CONFIDENTIAL
The Information on this document is the property of BHARAT HEAVY ELECTRICALS LIMITED. It must not be used directly or indirectly in any was detrimental to the interest of the Company.

पुन:Rev. 05 दि. Dt. 10/06/21	SHEET REAFFIRMED. RASHMI NITIN NKM	वितरण DISTRIBUTION.	सं.	स्वीकृत किया : APPROVED : BSB SCB	
पुन:Rev. 04 दि. Dt. 14/01/14	SHEET REAFFIRMED. ARVIND S.K.G. A.DEOTA	TRE/TRM/FBM TCX(TR)/TTX TTG/QC/QA TSD/ JHANSI	7	तैयार किया PREPD. SD	जारी किया ISSUED टीआरई/मानक TRE/STD.	दिनांक DATE 22.6.91

बीएचईएल BHEL Form No. 2038	उत्पाद मानक परिणामित्र शॉप /आ.का. निर्देश	PRODUCT STANDARD TRANSFORMER SHOP/DO INSTRUCTION	**TR10143C** 5 पृष्ठो में 4 PAGE 4 OF 5

REF. BC 7-1 Comp. drg.

शीर्षक TITLE – TOP YOKE CLAMPING ARRANGEMENT .

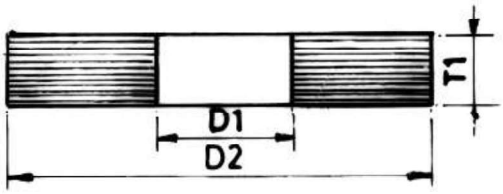

INSULATION WASHER
(SQUARE WITH SIDES OF D2)

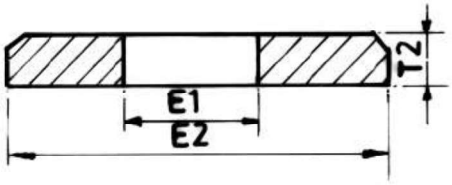

MACHINED STEEL WASHER

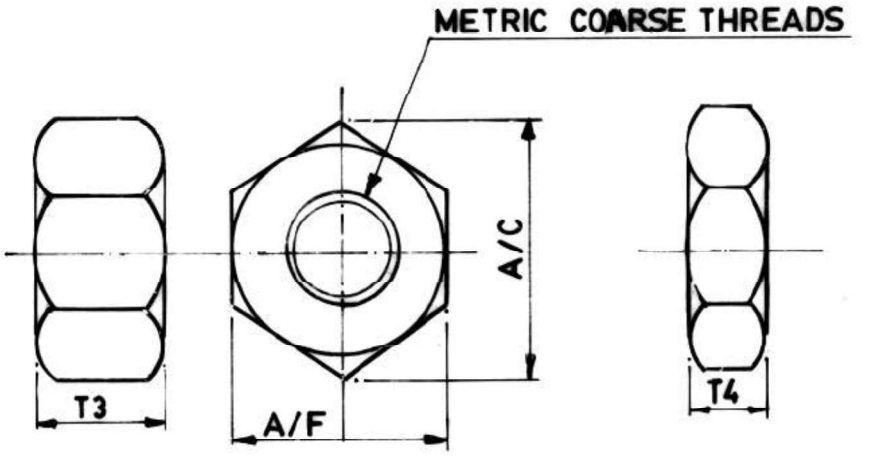

H.T.S. NUT

LOCK NUT

COPYRIGHT AND CONFIDENTIAL
The Information on this document is the property of BHARAT HEAVY ELECTRICALS LIMITED. It must not be used directly or indirectly in any was detrimental to the interest of the Company.

पुन:Rev. 05 दि. Dt. 10/06/21	SHEET REAFFIRMED. RASHMI NITIN NKM	वितरण DISTRIBUTION.	सं.	स्वीकृत किया : APPROVED : BSB SCB		
पुन:Rev. 04 दि. Dt. 14/01/14	SHEET REAFFIRMED. ARVIND S.K.G. A.DEOTA	TRE/TRM/FBM TCX(TR)/TTX TTG/QC/QA TSD/ JHANSI	8	तैयार किया PREPD. SD	जारी किया ISSUED टीआरई/मानक TRE/STD.	दिनांक DATE 22.6.91

Form No. 2038

उत्पाद मानक परिणामित्र

शॉप /आ.का. निर्देश

PRODUCT STANDARD TRANSFORMER

SHOP/DO INSTRUCTION

TR10143C

5 पृष्ठों में 5 | PAGE 5 OF 5

REF. BC 7-1

Comp. drg.

COPYRIGHT AND CONFIDENTIAL
The Information on this document is the property of BHARAT HEAVY ELECTRICALS LIMITED. It must not be used directly or indirectly in any was detrimental to the interest of the Company.

TR10143C

PAGE 5 OF 5

शीर्षक TITLE – TOP YOKE CLAMPING ARRANGEMENT.

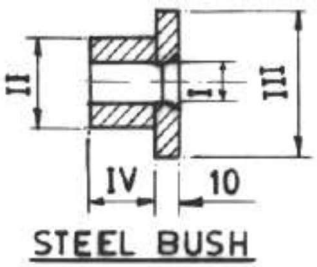

YOKE BOLT				HOLE DIA			STEEL BUSH (34997000009)				UNIMPREG LAMINATED WOOD WASHER 44997000022			STEEL WASHER (MACHINED)			H.T.S. NUT			STEEL LOCK NUT.		
SIZE	H.T.S. ROD DIA	INSULA-TED. DIA.	THREAD LENGTH	PUNCH-ING	YOKE INSUL.	END. FRAME.	I/D	O/D	FLANGE DIA.	TK	I/D	SIDE OF SQUARE	TK	I/D	O/D	TK	A/F	A/C	TK	A/F	A/C	TK
A	A1	A2	B	C1	D	C2	I	II	III	IV	D1	D2	T1	E1	E2	T2			T3			T4
** M16	16	19	33	22	44	42	22	40	60	16	22	50	12	17*	45*	5	24	26.75	13	24	26.75	8
** M20	20	23	37	26	48	46	26	44	63	16	26	55	12	21*	50*	5	30	33.53	16	30	33.53	9
M24	24	27	40	29	52	50	30	48	68	16	30	60	12	25*	55*	5	36	39.98	19	36	39.98	10
M30	30	34	48	38	61	59	38	56	76	16	38	70	12	31	65	5	46	51.28	24	46	51.28	12
M36	36	40	55	44	65	63	44	60	90	16	44	80	12	37	75	5	55	61.31	29	55	61.31	14
M42	42	48	64	52	73	71	52	68	100	16	52	95	12	43	90	7	64	71.00	34	64	71.00	16

1. LENGTH OF FIBRE GLASS WRAPPING `L`= MAX, CORE BUILD UP + 2 X (YOKE INSULATION TK. + ENDFRAME TK. + 20)
2. LENGTH OF YOKE BOLT= `L` (AS PER NOTE 1) + 2 X `B`

* NON STANDARD SIZE (REFER STD. DRG. 44997000021)
** NON PREFERRED SIZES.

पुन:Rev. 05 दि. Dt. 10/06/21	SHEET REAFFIRMED.	वितरण DISTRIBUTION.	सं.
पुन:Rev. 04 दि. Dt. 14/01/14	SHEET REAFFIRMED.	TRE/TRM/FBM TCX(TR)/TTX TTG/QC/QA TSD/ JHANSI	9
	RASHMI NITIN NKM	स्वीकृत किया :	
	ARVIND S.K.G. A.DEOTA	APPROVED : BSB SCB	
	तैयार किया PREPD. SD	जारी किया ISSUED टीआरई/मानक TRE/STD.	दिनांक DATE 22.6.91

BHARAT HEAVY ELECTRICALS LIMITED, BHOPAL
REFERENCE QUALITY PLAN FOR INSULATED YOKE BOLT

		QAP NO. QA/TCB/BO/164		REV 00	DATE: 16/04/2021			Sheet 1 of 1
SL.NO	COMPONENTS/OPERATION DESCRIPTION OR TEST	TYPE OF CHECK	QUANTUM OF CHECK/ SAMPLING WITH BASIS	REFERENCE DOCUMENT FOR TESTING	ACCEPTANCE NORMS	FORMAT OF RECORD	AGENCY	REMARKS
	INSULATED YOKE BOLT ASSEMBLY							
1	**YOKE BOLT**							
	Chemical and Mechanical Properties (EN-24 in T Condition)	Test	One Sample/ Lot	BHEL DRG/ TR10143C	BHEL DRG/ TR10143C	TC	BHEL/TPIA	Testing of Sample at NABL Accredited Lab.
2	**Heat Treatment and Straightness of Yoke Bolt**							
a)	Heat Treatment of Yoke Bolt	Test	One Sample/ Lot	BHEL DRG/ TR10143C	BHEL DRG/ TR10143C	TC	BHEL/TPIA	Testing of Sample at NABL Accredited Lab.
b)	Straightness of yoke bolt (After Machining ±1 mm Max- Shall be ensured before putting Insulation)	Measure	10% of each lot (Supplier shall provide TC for 100% Qty)	BHEL DRG/ TR10143C	BHEL DRG/ TR10143C	TC	BHEL/TPIA	CHP
3	**Threading and Insulation of Yoke bolt**							
a)	Threading of Yoke Bolt: i) Pitch - Coarse, ii) Tolerance Quality- 6H, iii) Threaded Portion coating by chemical resisting Varnish.	Visual, Measure	10% of each lot (Supplier shall provide TC for 100% Qty)	BHEL DRG/ TR10143C/ IS 4218-PT2/ BP 27577	BHEL DRG/ TR10143C/ IS 4218-PT2/ BP 27577	TC	BHEL/TPIA	CHP
b)	Insulation of Yoke Bolt: i) Cleaning of Yoke Bolts- Removal of Rust/ Scale ii) Coating of yoke Bolt with Mixed Resin up to required thickness. Iii) Curing of applied resin. Iv) Finishing of Cured insulation surface to maintain desired OD.	Visual, Measure	10% of each lot (Supplier shall provide TC for 100% Qty)	BHEL DRG/ TR10143C/ IS 4218-PT2/ BP 27577	BHEL DRG/ TR10143C/ IS 4218-PT2/ BP 27577	TC	BHEL/TPIA	CHP
4	**Testing of Insulated Yoke Bolt**							
	Insulated yoke bolts to be tested for Insulation strength by applying 50 Hz power frequency for 1 Min as per clause 2.5.2 of TR10143C.	Test	10% of each lot (Supplier shall provide TC for 100% Qty)	BHEL DRG/ TR10143C	BHEL DRG/ TR10143C	TC	BHEL/TPIA	CHP

TP1A-THIRD PARTY INSPECTION AGENCY, CIP- CUSTOMER INSPECTION POINTN (VENDOR CAN NOT PROCEED WITHOUT GETTING CLEARANCE FROM BHEL/TPIA), TC-TEST CERTIFICATE, TR-REPORT/ QC RECORD/MFG. RECORD OF MANUFACTURER. T. TEST, R= REPORT, V = VISUAL, M= MEASUREMENT.
This QAP shall be read in conjunction with Customer approved QAP/RQP/MQP for specific work Order (As applicable).

Prepared By

Satyendra Kumar Singh
Dy Engineer (QA-TCB)

Approved By

Abhishek Kumar Sharma
Manager (QA-TCB)

File No. HEP-TCB0GMO(Misc)/123/2025-HEP-TRM20600 (Computer No. 146519)
Generated from eOffice by Ajit Kumar, ENGINEER(AK)-ASC34200-HEP, ENGINEER, HEP-HEAVY ELECTRICALS PLANT (HEP) on 28/02/2025 04:48 pm