FIRST ANGLE PROJECTION

667718/2024/HEP-LEM21700

(ALL DIMENSIONS ARE IN mm.)

DWG. NO. 1 402 61 46001

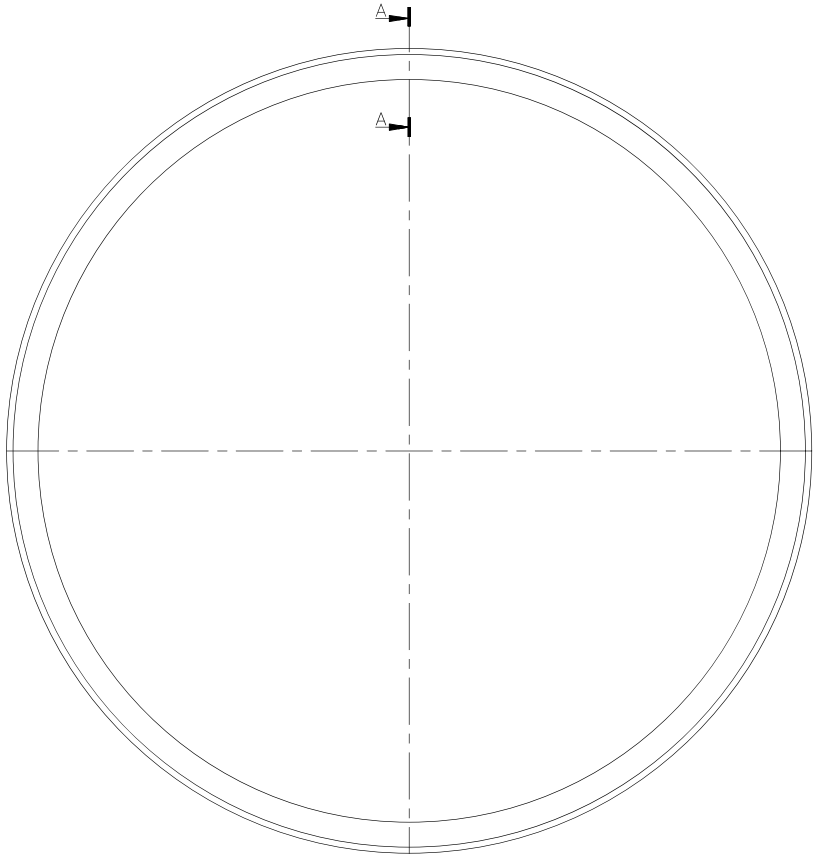

IT. NO.	øE	øF	G	FRAME	Wt (kg)	P
001	870	920	20	1RR7631	2.55	103000
002	850	900	20	1RR7636	2.47	103000
003	970	1020	20	1RR7713	2.81	103000
004	830	880	20	1LA7804	2.41	103000
005	860	910	20	1LA7802	2.5	103000
006	980	1030	20	1RR7717	2.84	103000
007	890	940	20	1RR7634	2.6	103000
008	1010	1060	20	1LA7902	2.97	103000
009	930	990	20	1RR7714	2.8	103000
010	940	990	20	1RR7713	2.48	103000
011	820	870	20	1LA7804	2.4	
012	760	810	20	1LA7804	2.3	
013	810	910	35	1LA7804	9.5	538500
014	750	850	20	1LA7804	4.8	349200
015	530	550	16	–	0.5	–
016	1120	1170	20	1LA7925	3.23	103000
017	830	970	20	1LA7906	7.13	313000
018	880	1020	35	1LA7906	13.16	591000
019	1130	1180	20	1RQ7805	3.23	103000
020	740	860	20	1MA7807	5.5	349200
021	790	910	35	1MA7807	8.6	538500
022	1020	1070	20	1RR7712	2.95	103000
023	1240	1290	20	1RR1903–6	3.28	103000
024	1385	1540	35	1TF7156	23	591000
025	1470	1620	35	1TF7156	23	591000
026	1325	1375	20	1TF4749	3.81	103000
027	1068	1168	35	1RN7804	11.063	171000
028	1300	1470	35	1TC4132	24.5	349200
029	1350	1540	35	1TC4132	27.0	349200
030	1105	1155	20	1RR1806–6	3.2	103000
031	1370	1540	35	1TC4132	26.5	349200
032	1350	1440	35	1TF4543	12.5	530000
033	1080	1160	35	1RN7806	8.3	275000
034	935	1020	35	1RN7718	8.22	414200
035	1370	1460	35	1TF4543	13.5	530000
036	1090	1160	35	1RN7806	6.70	275000
037	1050	1140	35	1RN7806	9.0	171000
038	1440	1590	35	1TF7156	21.4	591000
039	985	1035	20	1RQ1715–6	2.62	103000
040	1764	1844	20	1TF8843–8	8.14	538500
041	1834	1914	20	1TF8843–8	8.46	538500
042	1510	1590	20	1TF6737–8	6.93	349200
043	700	724	12	1TC4132	0.55	–
044	1390	1470	20	1DQ4342	6.80	538500
045	1450	1620	35	1TH7156	26.1	591000
046	1045	1125	35	2RN7716–4	8.22	171000
047	1744	1844	20	1TF8843–8	10.26	538500
048	1814	1914	20	1TF8843–8	10.66	538500
049	1350	1420	35	1TF4543	9.00	530000

TECHNICAL REQUIREMENT:–

1. THE RING TO BE MOULDED USING SUITABLE FORMER TO GIVE THE SECTION AND DIAMETERS AS REQUIRED.
2. THE RINGS TO BE MOULDED USING THE FOLLOWING MATERILS–
   (a) CLASS "E" CONTINUOUS GLASS FIBRE ROVINGS HAVING LINEAR DENSITY OF 2400/4800 TEX AS PER IS:11320:1997.
   (b) ALL OTHER PROPERTIES AND TESTING OF GLASS RAW MATERIAL SHALL BE AS PER BHEL SPEC. BP25693.
   (c) PLYESTER HYLAC RESIN HSR 8131 OF BAKELITE HYLAM/C451 GR. OF CRYSTIC/BP27696.
   (d) COMPATIBLE ACCELERATOR
   (e) COMPATIBLE CATALYST
   (f) FINAL TESTING OF BRACING RING SHALL BE AS PER T.R.5 OF THIS DRAWING.
3. CURING TO BE DONE AT 100°C FOR 4 HRS.
4. MAXIMUM PERMISSIBLE TOLERANCES ON NOMINAL INTERNAL DIA 'E' & VARITION IN FLATNESS WHEN LAID ON A SMOOTH SURFACE ARE–
   BELOW 1000 mm RING ± 1.5
   1000 TO 1500 mm RING ± 2.5
   ABOW 1500 mm RING ± 3.0
5. SAMPLE MECHNAICAL TESTING TO BE DONE ON 1 NO. RANDOMLY SELECTED RING IN EACH DELIVERY LOT.
   APPLY A LOAD OF (P/'E' DIA IN mm)kgs (AS SHOWEN IN FIGURE) FOR 10sec.
   NO CRACKING OR FLANKING IS PERMISSIBLE DURING ABOVE LOAD TESTING.
6. ITEM NO. SHOULD BE CLERLY MARKED ON EACH RING FOR EASY IDENTIFICATION.

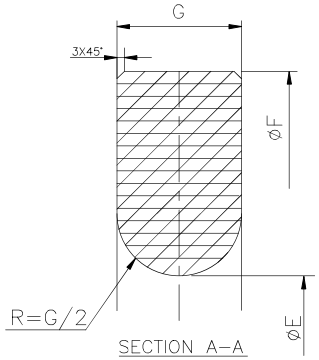

SECTION A–A

BRACING RING

SEE T.R.

59 64 VAR 00	65 REMARKS 75	78 WR.	79 25 ITEM NO.	27 29 DESCRIPTION 58	59 STD.	60 DRAWING NO. 77	29 31 IT. NO. 33 VAR.	34 MATL. CODE 46 MATL. SPECN.	45 55 CYCLE	56 57	58 UNIT WT. 65 66 QTY. 73	72 ZONE

28 → CARD TYPE-3 | 28 → CARD TYPE-1 | 28 → CARD TYPE-2

ADDITIONAL INFORMATION

STATUS OF DRAWING

DISTRIBUTION OF PRINTS
OC–1
TEX–3

TYPE OF PRODUCT OR NAME OF CUSTOMER/PROJECT: STANDARD

BHARAT HEAVY ELECTRICALS LTD. BHOPAL

	NAME	SIGN.	DATE
DRN	R.P.B.	–sd–	
CHD.	P.K.S.	–sd–	
APPD	AKB	–sd–	

73 74 NO OF VAR.

DEPT. CODE: AME 404 | GRADE OF UN. TOL. DIM. C/M/F | SCALE: NTS | WEIGHT(Kg.): – | REF. TO ASSY. DRG. | ITEM NO. | 75 77 NO. OF ITEMS

TITLE: BRACING RING

1 CARD CODE | 3 7 DRAWING NO. 1 402 61 46001 | 22 23 24 REV 43

SHEET NO. 01 NO. OF SHEETS 01

REV.	DATE	ALTERED	CHECKED	APPROVED	
43	01.10.24				ITEM 49 ADDED.
42	15.03.24				T.R. 2(a) & 2(c) UPDATED.
41	14.03.24				ITEM 47&48 ADDED.
40	10.06.23				ITEM 46 ADDED.

THE INFERMATION ON THIS DOCUMENT IS THE PROPERTY OF BHARAT HEAVY ELECTRICALS LIMITED.
IT MUST NOT BE USED DIRECTLY OR INDIRECTLY IN ANY WAY DETRIMENTAL TO THE INTEREST OF THE COMPANY.

REF. DRG. NO.

SIGN & DATE

INVENTORY NO.

SIZE A1

FIRST ANGLE PROJECTION

(ALL DIMENSIONS ARE IN mm)

667718/2024/HEP-LEM21700

DRG. NO. 34026146113

IT. NO.	ØE	ØF	G	FRAME	Wt (kg)	P
001	1000	1050	20	1RN7712	2.90	103000
002	840	980	35	1MA7906	12.5	591000
003	910	1050	35	1MA7906	13.5	591000
004	950	1000	20	1RN7716	2.60	103000
005	990	1040	20	1MA7903	2.80	103000
006	960	1010	20	1LA7903	2.80	103000
007	880	930	20	1LA7804	2.30	103000
008	970	1020	20	1RN7717	2.80	103000
009	1010	1060	20	1LA7903	3.00	103000
010	1010	1070	35	1DQ3735	6.20	171000
011	730	860	20	1MA7804	5.60	349200
012	780	910	35	1MA7804	8.80	538500
013	1100	1180	35	1LA7923	8.00	275000
014	1060	1135	20	1LA7923	4.30	137500
015	1140	1190	20	1LA7924	3.30	103000
016	1130	1190	35	1DQ3934	6.12	171000
017	890	980	35	1RN7713	8.93	360000
018	1060	1160	35	1RQ7804	10.3	538500

TECHNICAL REQUIREMENT :

1. THE RINGS TO BE MOULDED USING SUITABLE FORMERS TO GIVE THE SECTION AND DIAMETERS AS REQUIRED.
2. THE RINGS TO BE MOULDED USING THE FOLLOWING MATERIALS–
   (a) CLASS 'E' CONTINUOUS GLASS FIBRE ROVINGS 30 OR 60 ENDS.
   (b) POLYESTER HYLAC RESIN HSR 8131 OF BAKELITE HYLAM.
   (c) HYLAC ACCELERATOR Q 8021 OF BAKELITE HYLAM(1.5% BY VOL.)
   (d) HYLAC CATALYST Q 8013 OF BAKELITE HYLAM (1% BY VOL.)
3. AFTER POST CURING AT 100°C FOR 4 HRS THE MOULDED RINGS SHOULD HAVE 50% min. GLASS CONTENT.
4. MAXIMUM PERMISSIBLE TOLERANCES ON NOMINAL INTERNAL DIA 'E' & VARIATION IN FLATNESS WHEN LAID ON A SMOOTH SURFACE ARE–
   BELOW 1000 mm RING ±1.5
   1000 TO 1500 mm RING ±2.5
   ABOVE 1500 mm RING ±3.0
5. SAMPLE MECHANICAL TESTING TO BE DONE ON 1 NO. RANDOMLY SELECTED RING IN EACH DELIVERY LOT.
   APPLY A LOAD OF (P/'E' DIA IN mm)kgs AS SHOWN IN FIGURE FOR 10sec.
   NO CRACKING OR FLANKING IS PERMISSIBLE DURING ABOVE LOAD TESTING.
6. ITEM NO. SHOULD BE CLERLY MARKED ON EACH RING FOR EASY IDENTIFICATION.

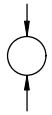

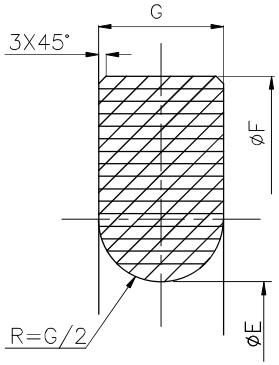

VAR 00	REMARKS	VAR NO.	ITEM NO.	DESCRIPTION	STD.	DRAWING NO.	IT.NO. / VAR	MATL. CODE / MATL. SPCN.	UNIT	UNIT WT. / QTY.	GS	ZONE
				BRACING RING				SEE T.R.	A / C			

28 → CARD TYPE–3 | 28 → CARD TYPE–1 | 28 → CARD TYPE–2

ADDITION INFORMATION: STANDARD

STATUS OF DRAWING

TYPE OF PRODUCT OR NAME OF CUSTOMER/PROJECT: STANDARD

DISTRIBUTION OF PRINT: O.C.–1 TEX(IMM)–1 TEX–3

BHARAT HEAVY ELECTRICALS LTD. BHOPAL

	NAME	SIGN	DATE
DRN	ALC	–sd–	19.12.86
CKD	PKS	–sd–	21.12.86
APPD	SBK	–sd–	24.12.86

NO. OF VAR

REV	DATE	ALTERED / CHECKED / APPROVED

REV	DATE	ALTERED / CHECKED / APPROVED
17	12.03.21	

DRG. REDRAWN & UPDATED WEIGHT CORRECTED OF IT. 05.

DEPT. AME CODE 404 | GRADE OF UNTOL. DIM. C/M/F | SCALE NTS | WEIGHT (kg) – | REF. TO ASSY. DRG. | ITEM NO. | NO. OF ITEMS

TITLE: BRACING RING

DRAWING NO. 34026146113 | REV. 17

SHEET NO. | NO. OF SHEET

REF. DRG. NO. | SIGN. & DATE | INVENTORY NO.

SIZE A3

THE INFORMATION ON THIS DOCUMENT IS THE PROPERTY OF BHARAT HEAVY ELECTRICALS LIMITED. IT MUST NOT BE USED DIRECTLY OR INDIRECTLY IN ANY WAY DETRIMENTAL TO THE INTEREST OF THE COMPANY.

FIRST ANGLE PROJECTION

(ALL DIMENSIONS ARE IN mm)

667718/2024/HEP-LEM21700

DRG. NO. 34026146141

IT. NO.	ØE	ØF	G	FRAME	Wt (kg)	P
001	910	960	20	1LA7905	2.43	103000
002	940	990	20	1LA7904	2.8	103000
003	870	1010	20	1RQ1713-2	7.2	103000
004	930	1060	35	1RQ1713-2	12.6	591000
005	1290	1340	20	1RQ1900-5	3.8	103000
006	950	1000	20	1MA7904	2.8	103000
007	930	980	20	1G73527	2.6	103000
008	900	1020	35	1SJ1713-2	11.2	591000
009	960	1060	40	1SJ1713-2	11.40	591000
010	1110	1160	20	1RR1803	3.0	103000
011	1260	1310	20	1RN1907-3	3.7	103000
012	1220	1270	20	1RR1903-6	3.5	103000
013	1280	1330	20	1RQ1900-5	3.8	103000
014	1020	1070	20	1DQ3735	3.2	103000
015	1160	1210	20	1SQ1905-4	3.30	103000
016	1200	1270	25	1SQ1905-4	6.1	103000
017	920	960	25	1LA7905-4	2.65	103000
018	960	1055	40	1RQ1716-2	10.0	591000
019	905	995	20	1RN7712-4	4.62	103000
020	1080	1145	20	1SJ7808-4	3.9	103000
021	1020	1070	20	1RQ7710-3	2.65	103000
022	1270	1320	20	1RQ7905-3	3.53	103000

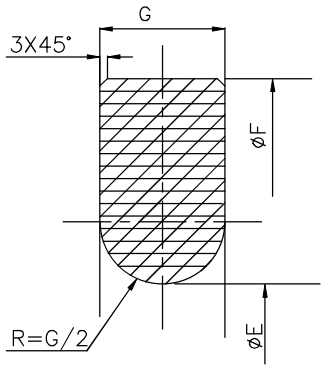

NOTES:-

1. THE RING TO BE MOULDED USING SUITABLE FORMER TO GIVE THE SECTION AND DIAMETERS AS REQUIRED.
2. THE RINGS TO BE MOULDED USING THE FOLLOWING MATERILS-
   (a) CLASS 'E' CONTINUOUS GLASS FIBRE ROVINGS 30 OR 60 ENDS.
   (b) PLYESTER HYLAC RESIN HSR 8131 OF BAKELITE HYLAM.
   (c) HYLAC ACCELERATOT Q 8021 OF BAKELITE HYLAM(1.5% BY VOL.)
   (d) HYLAC CATALYST Q 8013 OF BAKELITE HYLAM (1% BY VOL.)
3. AFTER POST CURING AT 100°C FOR 4 HRS THE MOULDED RINGS SHOULD HAVE 50% min. GLASS CONTENT.
4. MAXIMUM PERMISSIBLE TOLERANCES ON NOMINAL INTERNAL DIA 'E' & VARITION IN FLATNESS WHEN LAID ON A SMOOTH SURFACE ARE-
   BELOW 1000 mm RING ± 1.5
   1000 TO 1500 mm RING ±2.5
   ABOW 1500 mm RING ± 3.0
5. SAMPLE MECHNICAL TESTING TO BE DONE ON 1 NO. RANDOMLY SELECTED RING IN EACH DELIVERY LOT.
   APPLY A LOAD OF (P/'E' DIA IN mm)kgs AS SHOWN IN FIGURE FOR 10sec.
   NO CRACKING OR FLANKING IS PERMISSIBLE DURING ABOVE LOAD TESTING.

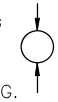

6. ITEM NO. SHOULD BE CLERLY MARKED ON EACH RING FOR EASY IDENTIFICATION.

VAR 00	REMARKS	VAR NO.	ITEM NO.	DESCRIPTION	STD.	DRAWING NO.	IT.NO. / VAR	MATL. CODE / MATL. SPCN.	A / C	UNIT	UNIT WT. / QTY.	GS	ZONE
59 64	65 75	78 79	25 27	29 58	59	60 77	29 31 / 32 33	34 45 / 46 54	55	56-57	58 65 / 66 71	72	

28 → CARD TYPE-3 | 28 → CARD TYPE-1 | 28 → CARD TYPE-2

ADDITION INFORMATION: STD.

STATUS OF DRAWING

DISTRIBUTION OF PRINT: O.C.-1 TEX(PLM)-1 PLM-3

TYPE OF PRODUCT OR NAME OF CUSTOMER/PROJECT: STANDARD

BHARAT HEAVY ELECTRICALS LTD. BHOPAL

	NAME	SIGN	DATE
DRN	RPB	Sd/-	26.09.00
CKD	DKD	Sd/-	26.09.00
APPD	SKG	Sd/-	26.09.00

NO. OF VAR

REV	DATE	ALTERED / CHECKED / APPROVED	REV	DATE	ALTERED / CHECKED / APPROVED	REV	DATE	ALTERED / CHECKED / APPROVED	REV	DATE	ALTERED / CHECKED / APPROVED
			18	08.09.23		17	11.11.19		16	23.03.19	AJAY / MN
INVENTORY NO.				IT.NO. 22 ADDED.			IT.NO. 21 ADDED.			IT.NO. 20 ADDED.	

DEPT. AME | CODE 404 | GRADE OF UNTOL. DIM. C/M/F | SCALE NTS | WEIGHT (kg) – | REF. TO ASSY. DRG. | ITEM NO. | NO. OF ITEMS

TITLE: BRACING RING

DRAWING NO. 34026146141 | REV. 18

SHEET NO. | NO. OF SHEET

SIZE A3

RPB/34026146141

REF. DRG. NO.

SIGN. & DATE

THE INFORMATION ON THIS DOCUMENT IS THE PROPERTY OF BHARAT HEAVY ELECTRICALS LIMITED. IT MUST NOT BE USED DIRECTLY OR INDIRECTLY IN ANY WAY DETRIMENTAL TO THE INTEREST OF THE COMPANY.

667718/2024/HEP-LEM21700

FIRST ANGLE PROJECTION (ALL DIMENSIONS ARE IN mm)

REV	DATE	ALTERED / CHECKED / APPROVED	REV	DATE	ALTERED / CHECKED / APPROVED	ADDITION INFORMATION
26	31.07.21	ALTERED RV; CHECKED; APPROVED AK	25	09.03.20	ALTERED AJAY; CHECKED; APPROVED VP	—
ITEM 33 ADDED.			WEIGHTS OF IT.01 & IT.27 CORRECTED.			STATUS OF DRAWING
						DISTRIBUTION OF PRINT AME–1, PLM–3, TEX(PLM)–1

THE INFORMATION ON THIS DOCUMENT IS THE PROPERTY OF BHARAT HEAVY ELECTRICALS LIMITED. IT MUST NOT BE USED DIRECTLY OR INDIRECTLY IN ANY WAY DETRIMENTAL TO THE INTEREST OF THE COMPANY.

BRACING RING

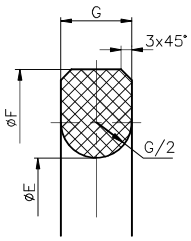

TECHNICAL REQUIREMENTS–

1. THE RING TO BE MOULDED USING SUITABLE FORMERS TO GIVE THE SECTION AND DIAMETERS AS REQUIRED.
2. THE RINGS TO BE MOULDED USING THE FOLLOWING MATERIALS–
   (I) CLASS 'E' CONTINUOUS GLASS FIBRE ROVINGS 30 OR 60 ENDS.
   (II) POLYESTER HYLAC RESIN HSR 8131 OF BAKELITE HYLAM.
   (III) HYLAC ACCELERATOR Q8021 OF BAKELITE HYLAM (1.5% BY VOL.).
   (IV) HYLAC CATALYST Q8013 OF BAKELITE HYLAM (1% BY VOL.).
3. AFTER POST CURING AT 100°C FOR 3 HRS THE MOULDED RINGS SHOULD HAVE 50% MIN. GLASS CONTENT.
4. MAXIMUM PERMISSIBLE TOLERANCES ON NOMINAL INTERNAL DIA 'E' AND VARIATION IN FLATNESS WHEN LAID ON A SMOOTH SURFACE ARE–
   BELOW 1000mm RING = ±1.5
   1000 TO 1500mm RING = ±2.5
   ABOVE 1500mm RING = ±3.0
5. SAMPLE MECHANICAL TESTING TO BE DONE ON 1 NO. OF EACH SIZE OF RING IN EACH DELIVERY LOT.
   APPLY A LOAD OF $\left(\frac{P}{E \text{ DIA IN mm}}\right)$ kgs
   AS SHOWN IN FIGURE FOR 10sec.
   NO CRACKING OR FLAKING IS PERMISSIBLE DURING ABOVE LOAD TESTING.
6. ITEM NO. SHOULD BE CLEARLY MARKED ON EACH RING FOR EASY IDENTIFICATION.
7. FOR RESIN REF. BP 27696 (MAT. SPECN.)

ITEM NO.	øE	øF	G	FRAME	P	WEIGHT kg
01	1040	1140	35	1TC3631	414200	10.20
02	1110	1180	35	1TC3631	171000	7.044
03	1110	1160	20	1TF6542	103000	2.932
04	1190	1260	35	1TF6542	171000	7.573
05	1120	1170	20	1LS7925	103000	3.23
06	830	910	25	1LA7905–2	103000	4.8
07	900	1000	35	1LA7905–2	171000	9.2
08	870	1010	35	1RQ1716–2	414200	12.6
09	930	1060	50	1RQ1716–2	414200	17.5
10	1230	1280	25	1RR1905–1	103000	4.43
11	1170	1220	20	1SQ1905–4	103000	3.30
12	1230	1310	35	1SQ1905–4	414200	10.00
13	960	1020	20	1RN7718–4	133000	3.50
14	870	970	20	1SN1712–2	414200	5.2
15	940	1060	35	1SN1712–2	414200	11.9
16	1370	1460	20	1DQ4342	538500	6.50
17	1090	1190	35	1SJ7804–4	171000	10.46
18	900	1050	35	1RN7714–2	414200	14.46

AM 54234 REF. DRG. NO.

SIGN. & DATE

BHARAT HEAVY ELECTRICALS LTD.
BHOPAL

	NAME	SIGN	DATE
DRN	LP	Sd/–	1.8.03
CKD	RPG	Sd/–	1.8.03
APPD	SB	Sd/–	1.8.03

73 74 NO. OF VAR

INVENTORY NO.

DEPT. AME | CODE 404 | GRADE OF UNTOL. DIM. C/M/F | SCALE NTS | WEIGHT (kg) – | REF. TO ASSY. DRG. | ITEM NO. | 75 77 NO. OF ITEMS

TITLE BRACING RING

7 DRAWING NO. 4 402 05 46234 | 22 23 24 REV. 26

SHEET NO. 01 | NO. OF SHEET 02

RV/AMDrg./44020546234

SIZE A4

FIRST ANGLE PROJECTION (ALL DIMENSIONS ARE IN mm)

REV	DATE	ALTERED / CHECKED / APPROVED	REV	DATE	ALTERED / CHECKED / APPROVED	ADDITION INFORMATION
26	31.07.21	ALTERED RV; CHECKED; APPROVED AK	25	09.03.20	ALTERED AJAY; CHECKED; APPROVED VP	—
ITEM 33 ADDED.			WEIGHTS OF IT.01 & IT.27 CORRECTED.			STATUS OF DRAWING
						DISTRIBUTION OF PRINT AME–1, PLM–3, TEX(PLM)–1

THE INFORMATION ON THIS DOCUMENT IS THE PROPERTY OF BHARAT HEAVY ELECTRICALS LIMITED. IT MUST NOT BE USED DIRECTLY OR INDIRECTLY IN ANY WAY DETRIMENTAL TO THE INTEREST OF THE COMPANY.

ITEM NO.	øE	øF	G	FRAME	P	WEIGHT kg
19	1330	1420	35	1TT4945	530000	12.5
20	1070	1120	20	1RA7802	103000	3.10
21	1250	1300	20	1RR1903	103000	3.82
22	1160	1240	20	1SB1903	103000	3.5
23	1200	1310	45	1SB1903	414200	15.45
24	1240	1320	20	1DQ4134	103000	6.00
25	1080	1150	35	1LA7924	275000	8.00
26	1140	1180	20	1LA7924	103000	3.5
27	1270	1330	20	1RN1906	103000	4.20
28	1265	1315	20	1RA1906	103000	3.7
29	870	970	25	1RQ1712	414200	6.5
30	935	1040	35	1RQ1712	414200	10.3
31	1130	1180	25	1LS7925	103000	4.08
32	860	960	35	1LA7905	530000	9.00
33	1150	1190	20	1RQ1802	103000	2.43

AM 54234 REF. DRG. NO.

SIGN. & DATE

BHARAT HEAVY ELECTRICALS LTD.
BHOPAL

	NAME	SIGN	DATE
DRN	LP	Sd/–	1.8.03
CKD	RPG	Sd/–	1.8.03
APPD	SB	Sd/–	1.8.03

73 74 NO. OF VAR

INVENTORY NO.

DEPT. AME | CODE 404 | GRADE OF UNTOL. DIM. C/M/F | SCALE NTS | WEIGHT (kg) – | REF. TO ASSY. DRG. | ITEM NO. | 75 77 NO. OF ITEMS

TITLE BRACING RING

7 DRAWING NO. 4 402 05 46234 | 22 23 24 REV. 26

SHEET NO. 02 | NO. OF SHEET 02

RV/AMDrg./44020546234

SIZE A4

667718/2024/HEP-LEM21700

BHARAT HEAVY ELECTRICALS LIMITED, BHOPAL

QUALITY ASSURANCE PLAN FOR BRACING RING TO BHEL ORDERING DRAWING AS PER PO

QUALITY PLAN NO. –QA/MT/BOI/079 REV 00 **DATED: 08.09.2020**

SL. NO	COMPONENT	CHARACTERISTICS	TYPE OF CHECK	QUANTAM OF CHECK	REFERENCE DOCUMENT	ACCEPTANCE NORMS	FORMAT OF RECORD	INSPECTION AGENCY	REMARKS
01	**Resin & its accelerator and catalyst**	Properties as per spec.	Verification of supplier TC	Representative Sample	BP27696/IS 6746	BP27696/IS6746	Supplier TC	BHEL/TPIA	Record Review
02	**Glass fibre roving**	Properties as per spec.	Verification of supplier TC	Sample	BP 25693/ IS11320	BP 25693/ IS11320	Supplier TC	BHEL/TPIA	Record Review
03		Dimensions & flatness of Bracing Ring	Measurement	100%	Drawing	Drawing	Inspection Report	BHEL/TPIA	Witness
04		Mechanical Test	Test	Sample	Drawing	Drawing	Test Report	BHEL/TPIA	Witness
05	**Marking & Packing**	-Vendor name, size, PO No, Sl. No, Spec./drawing no. -Suitable Packing to avoid transit damage	Visual	100%	PO	PO	Inspection Report	BHEL/TPIA	Record Review

Prepared By	Approved By
आशीष मोहन तेलगोटे / A. M. TELGOTE उप प्रबंधक (गु.आ.) / Dy. Manager (Q.A.) गुणवत्ता आश्वासन मोटर्स / Quality Assurance-Motors बी.एच.ई.एल., भोपाल / BHEL, BHOPAL **(Ashish Mohan Telgote)**	एफ.ए.टोप्पो / F.A. TOPPO अपर महाप्रबंधक / Add. General Manager क्यू.ई.एम. / QEM बी.एच.ई.एल., भोपाल / BHEL, BHOPAL **F A Toppo**