THE INFORMATION ON THIS DOCUMENT IS THE PROPERTY OF BHARAT HEAVY ELECTRICALS LIMITED.
IT MUST NOT BE USED DIRECTLY OR INDIRECTLY IN ANY WAY DETRIMENTAL TO THE INTEREST OF THE COMPANY.

1235040/2023/HEP-TXM20500

INVENTORY NO.	SIGN. & DATE	REF. DRG. NO.

FIRST ANGLE PROJECTION

DRG. NO. 0 445 31 64 053

(ALL DIMENSIONS ARE IN mm)

TOOL LIST		
IT.NO.	TOOL NO.	DESCRIPTION
001	1577838	SNAP GAUGE 89MM
001	1577839	SNAP GAUGE 79MM
001	1577840	HOLDING FIXTURE WITH REF. BLOCK
001	1577837	$585^{+0.2}_{0}$ PIN GAUGE
001	1605206	GAUGE FOR MOUNTING PAD THICKNESS
001	1605207	GAUGE FOR LIFTING LUG THICKNESS

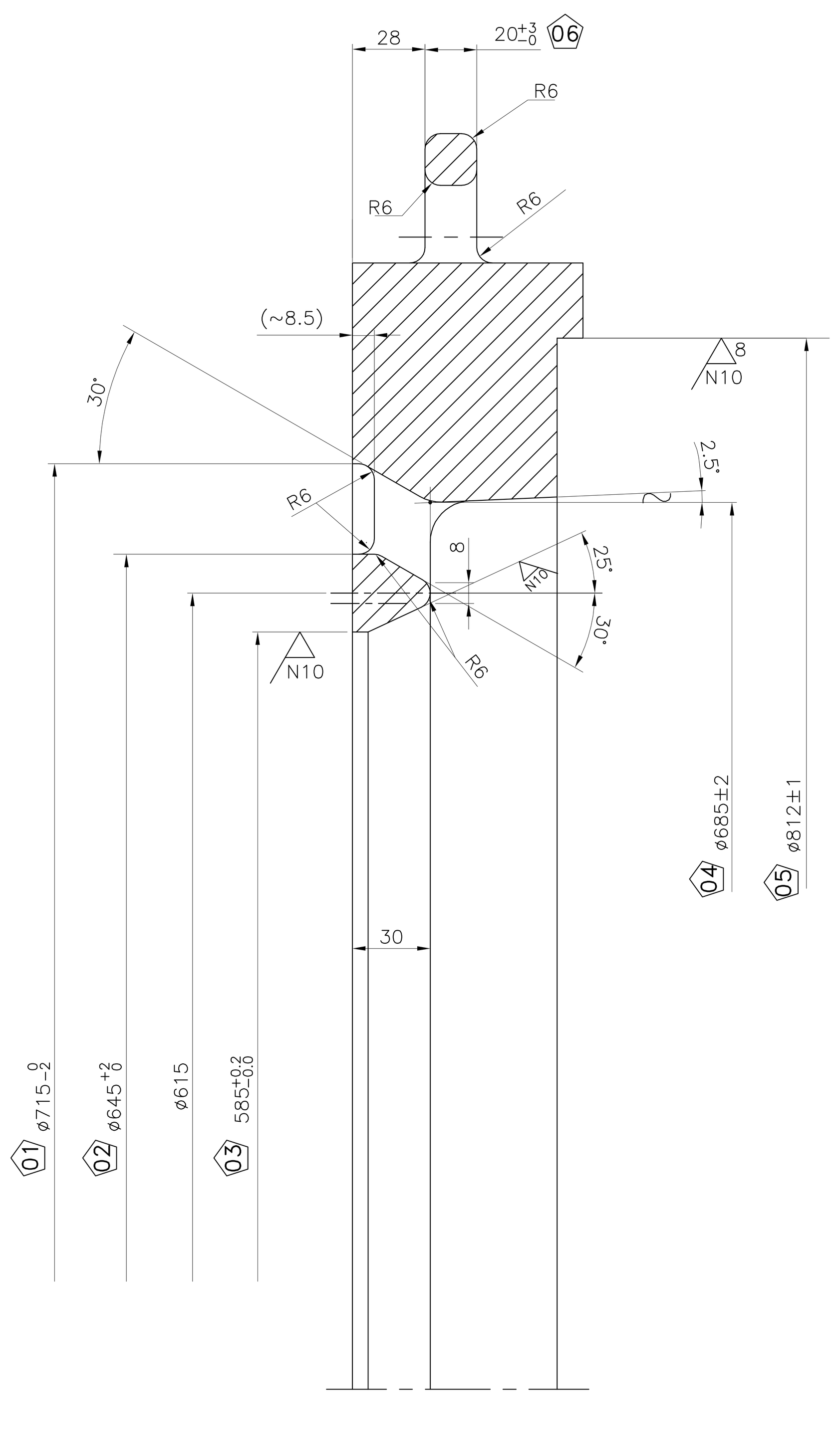

SECTION A–A

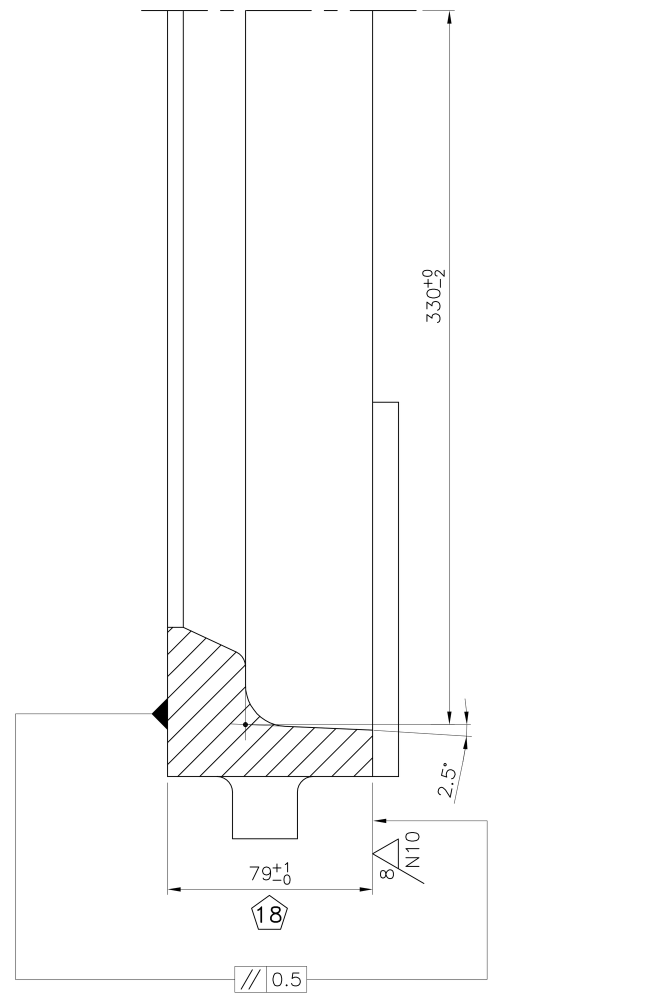

SECTION C–C

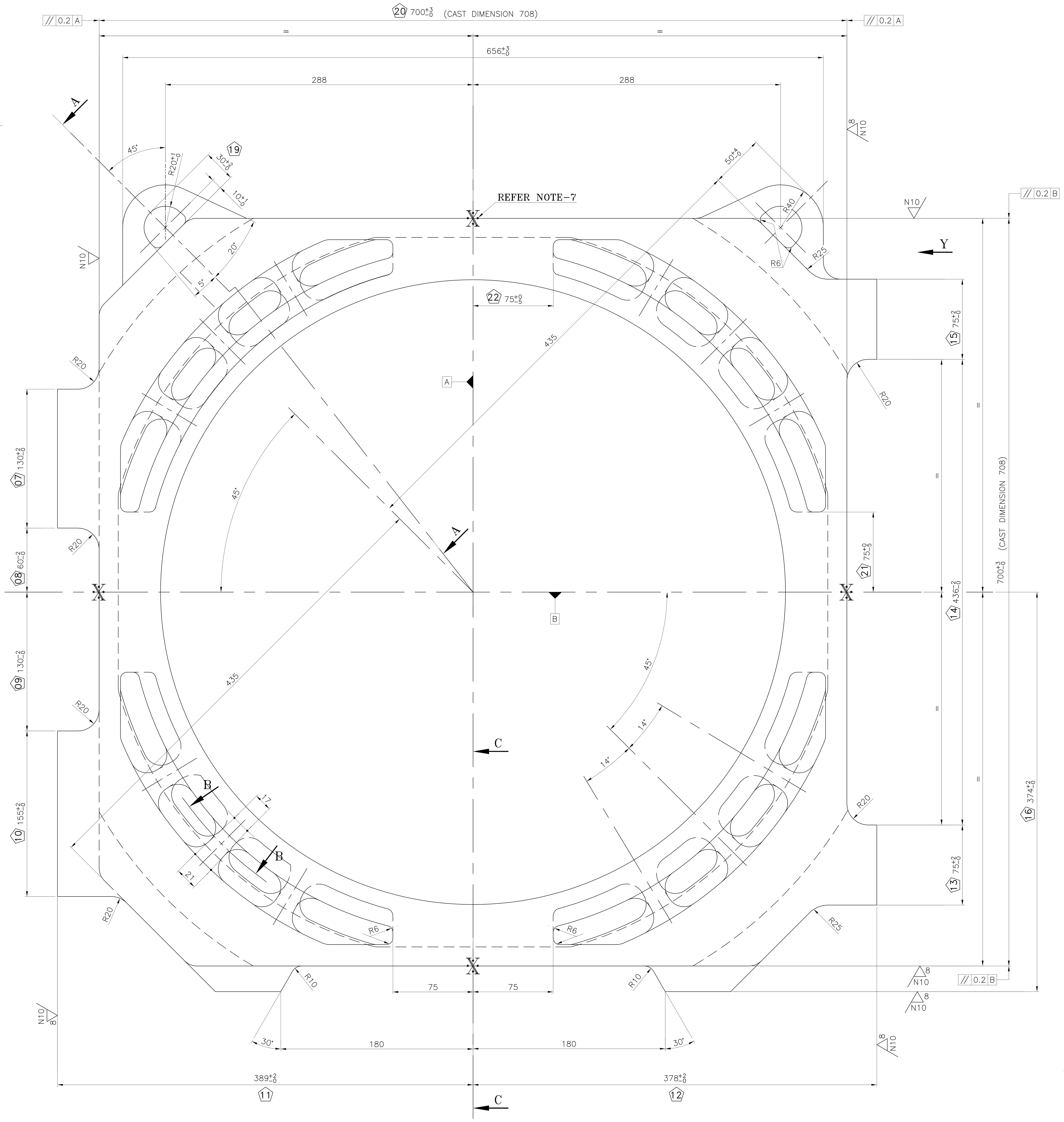

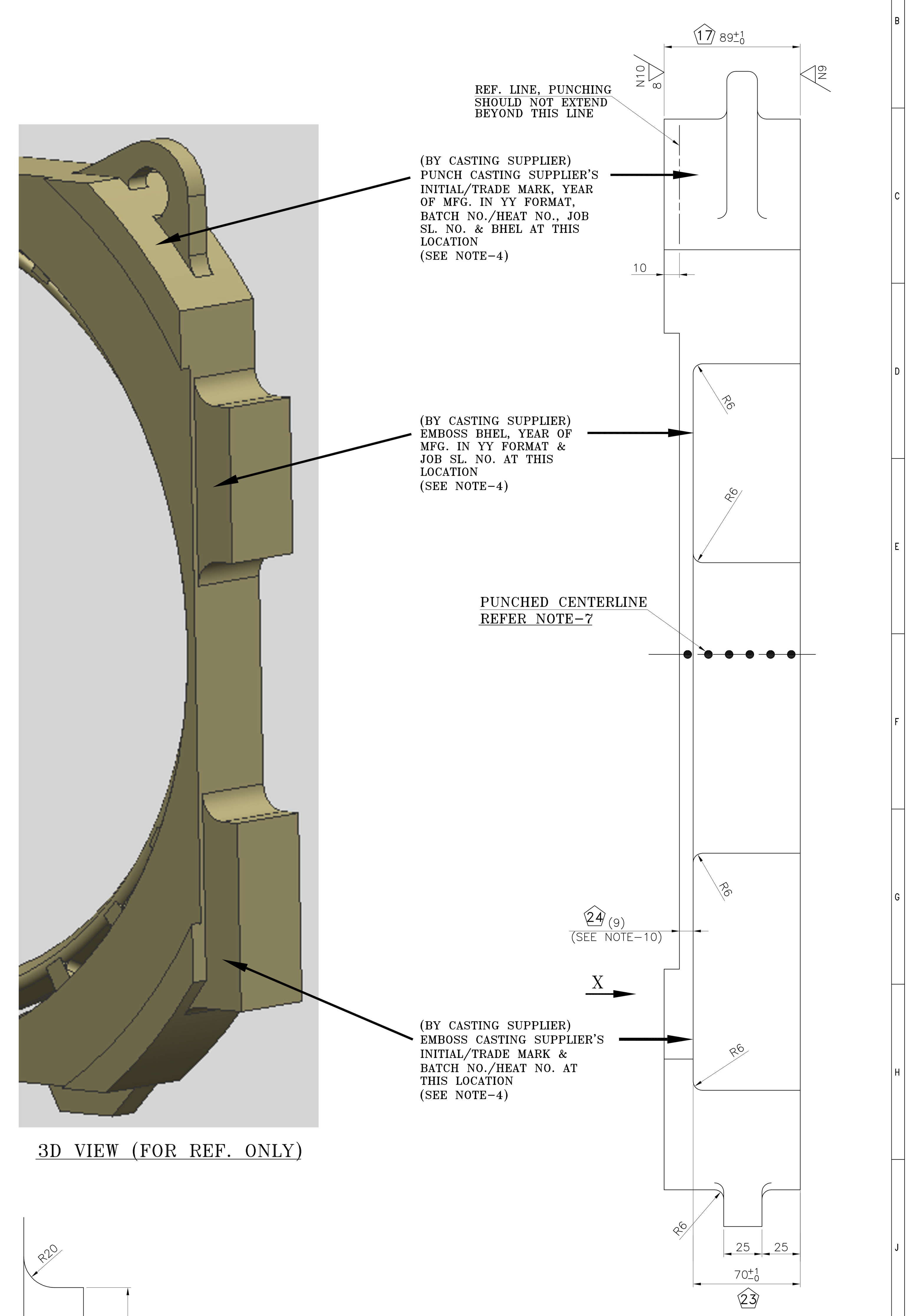

3D VIEW (FOR REF. ONLY)

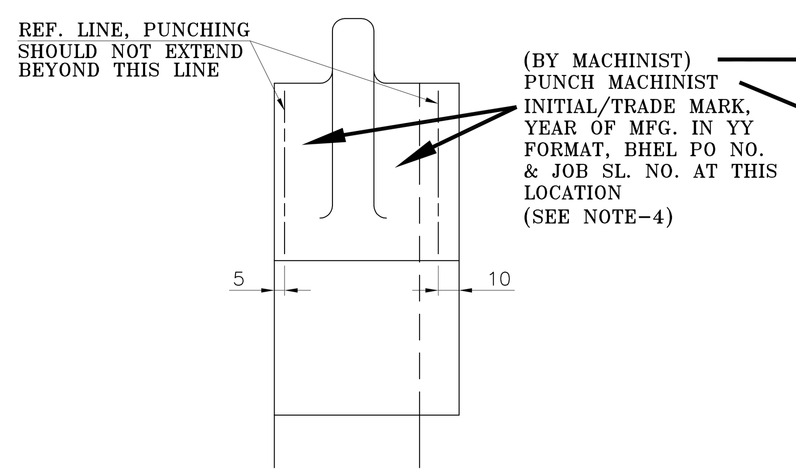

VIEW AS ARROW–Y

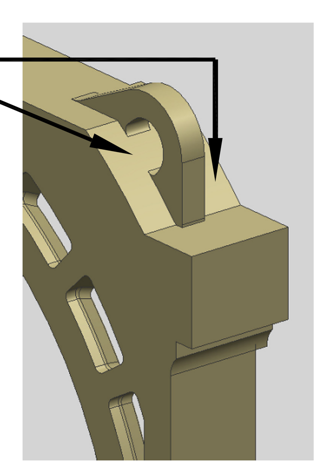

3D VIEW (FOR REF. ONLY)

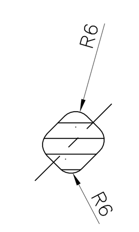

SECTION B–B

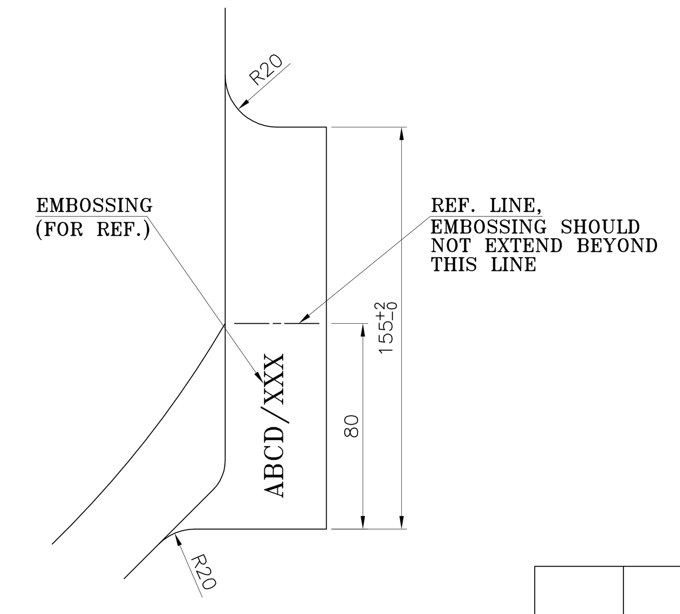

VIEW AS ARROW–X

NOTES:–

1. CASTING SHALL BE CAREFULLY SCALED & CLEANED.
2. AIR POCKETS SHALL BE PROPERLY DRESSED & REQUIRED RADIUS SHALL BE CAREFULLY MAINTAINED.
3. FIRM SHOULD HAVE THEIR OWN FOUNDRY DULY APPROVED BY RDSO AS CLASS–A FOUNDRY FOR CASTING THE RAW MATERIAL OF SPECIFIED GRADE (CARBON STEEL CASTING TO IS : 1030 (1998) GRADE 230–450W OR LATEST) FOR ITEM STATOR CHAMBER DE & NDE OR THEY HAVE TO SUBMIT ADEQUATE DOCUMENTARY EVIDENCE REGARDING SOURCING OF RAW MATERIAL (CASTING) FROM RDSO APPROVED CLASS–A FOUNDRY ONLY.
4. (25) EMBOSSING & PUNCHING TO BE DONE AT THE SHOWN LOCATION BY CASTING SUPPLIER AND MACHINIST. SIZE OF EMBOSSING/PUNCHING TO BE 5–20mm. EMBOSSING & PUNCHING SHOULD BE LEGIBLE AND SHOULD NOT BE MACHINED/DAMAGED DURING MACHINING AND SHALL BE RETAINED.
5. QAP FOR CASTING TO BE AS PER QTM/QAP/VENDOR/13–14/001 (LATEST REV.).
6. ADDITIONAL MATERIAL SHALL NOT BE PROVIDED ON SURFACES WHERE MACHINING SYMBOL IS NOT INDICATED. TOLERANCES ON UNTOLERATED CASTING SURFACES SHALL BE AS PER IS:4897, CLASS–1.
7. X CENTERLINE TO BE PUNCHED ON STATOR CHAMBER ON ALL FOUR SIDE FACE ALONG THE WIDTH.
8. ALL 25 NOS. "⬠" MARKED DIMENSIONS AND NOTES ARE CRITICAL TO QUALITY (CTQ) & SL. NO. OF CTQ DIMENSIONS AND NOTES ARE INSCRIBED IN ⬠ e.g. (25).
9. SURFACE FINISH OF UNMACHINED CASTED SURFACE TO BE AS PER IS:3073.
10. DIM. TO BE ENSURED IN ROUGH MACHINED CASTING SO THAT EMBOSSING IS NOT MACHINED DURING FINAL MACHINING.

SURFACE ROUGHNESS VALUE TO IS:3073	GRADE NUMBER	N1	N2	N3	N4	N5	N6	N7	N8	N9	N10	N11	N12
	Ra μ m	0.025	0.05	0.1	0.2	0.4	0.8	1.6	3.2	6.3	12.5	25	50
	SYMBOL	▽			▽			▽			▽		∼

REV.	DATE	ALTERED / CHECKED / APPROVED	ZONE	DESCRIPTION
13	26.11.22	VIJAY / MP / MP		IN TOOL LIST, TOOL NO. 1605206 & 1605207 ADDED. (TCM–361)
12	15.11.22	A.J. / ABHIJIT / ABHIJIT		NOTE 3 MODIFIED. LIFTING LUG DIMENSIONS MODIFIED.(REVISED IN LINE WITH CLW DRAWING NO. 1TWD.096.017 ALT.08)
11	24.8.21	SDB / ABHIJIT / ABHIJIT		DIM. 9 ADDED (G/13). NOTE–4 MODIFIED & NOTE–10 ADDED. VIEW–X ADDED. LOCATION OF EMBOSSING & PUNCHING MODIFIED.
10	27.7.21	SDB / ABHIJIT / ABHIJIT		LIFTING LUG VIEW MODIFIED. DIM. R45 & 673^{+3}_{-0} WERE DIM. R50 & 676^{+3}_{-0} NOTES RENUMBERED.
09	19.8.19	SDB / ABHIJIT / ABHIJIT		NOTES–2, 4, 5 & 10 DELETED. NOTE–13 ADDED.
08	05.7.19	SDB / ABHIJIT / ABHIJIT		CRITICAL TO QUALITY DIMS. ARE "⬠" MARKED AND NUMBERED. NOTE–12 ADDED.
07	04.12.17	SDB / ABHIJIT / ABHIJIT		LIFTING LUG VIEW MODIFIED. NOTE–11 & SEC.–CC ADDED.
06	22.5.17	SDB / ABHIJIT / ABHIJIT		NOTES–7 TO 10 ADDED.
05	4.3.17	SDB / ABHIJIT / ABHIJIT	D,G/5	EMBOSSING/PUNCHING LOCATIONS ADDED.
04	28.08.13			IN NOTE–4 LATEST REV. WAS ALT.01.
03	27.12.11			BOM IT.001 R.WT.115 KG & FINISH WT.94KG WERE NOT ON.
02	12.05.11	S.ANAND		TM–11486 WAS ON 4TMS.096.059.
01	07.01.11			DRG. UPDATE & DIGITIZED.

QTY VAR 00	REMARKS	VAR. NO.	ITEM NO.	DESCRIPTION	STD	DRAWING NO.	IT.NO. / VAR.	MATL. CODE / MATL. SPCN.	A/C	UNIT	UNIT WT. / QTY.	GS	ZONE
				STATOR CHAMBER (DE) (CNC MACHD.)				TM–11486			KG 94		
	R.WT.–115KG			STATOR CHAMBER (DE) (CAST)				TM–11486					

ADDITIONAL INFORMATION 1TWD.096.017, (ALT.8)
STATUS OF DRAWING
DISTRIBUTION OF PRINTS
TME–1, TXM–3, TNX–1

TYPE OF PRODUCT OR NAME OF CUSTOMER/PROJECT: TRACTION MOTOR 6FRA–6068

BHARAT HEAVY ELECTRICALS LTD. BHOPAL

	NAME	SIGN	DATE
DRN.	BHAGAT	–sd–	01/09/10
CHD.	D.K	–sd–	01/09/10
APPD.	A.S	–sd–	01/09/10

DEPT. TME | CODE 405 | UNTOL. DIMS. GR. | SCALE | WEIGHT (K.G.) 94 | REF. TO ASSY. DRG. 0 445 31 64 052 | ITEM NO. 002

TITLE: STATOR CHAMBER (DE) CNC MACHD. (PARTLY FINISHED)

DRAWING NO. 0 445 31 64 053 | REV. 13 | SHT. NO. 01 | NO. OF SHT. 01

SIZE A0

THE INFORMATION ON THIS DOCUMENT IS THE PROPERTY OF BHARAT HEAVY ELECTRICALS LIMITED.
IT MUST NOT BE USED DIRECTLY OR INDIRECTLY IN ANY WAY DETRIMENTAL TO THE INTEREST OF THE COMPANY.

1235040/2023/HEP-TXM20500

INVENTORY NO.	SIGN. & DATE	REF. DRG. NO.

FIRST ANGLE PROJECTION

DRG. NO. 0 445 31 64 054

(ALL DIMENSIONS ARE IN mm)

TOOL LIST		
IT.NO.	TOOL NO.	DESCRIPTION
001	1577902	MILLING FIXTURE FOR HOLDING PURPOSE
001	1577837	$585^{+0.2}_{0}$ PIN GAUGE
001	1577838	SNAP GAUGE, 89mm
001	1577839	SNAP GAUGE, 79mm
001	1605206	GAUGE FOR MOUNTING PAD THICKNESS
001	1605207	GAUGE FOR LIFTING LUG THICKNESS

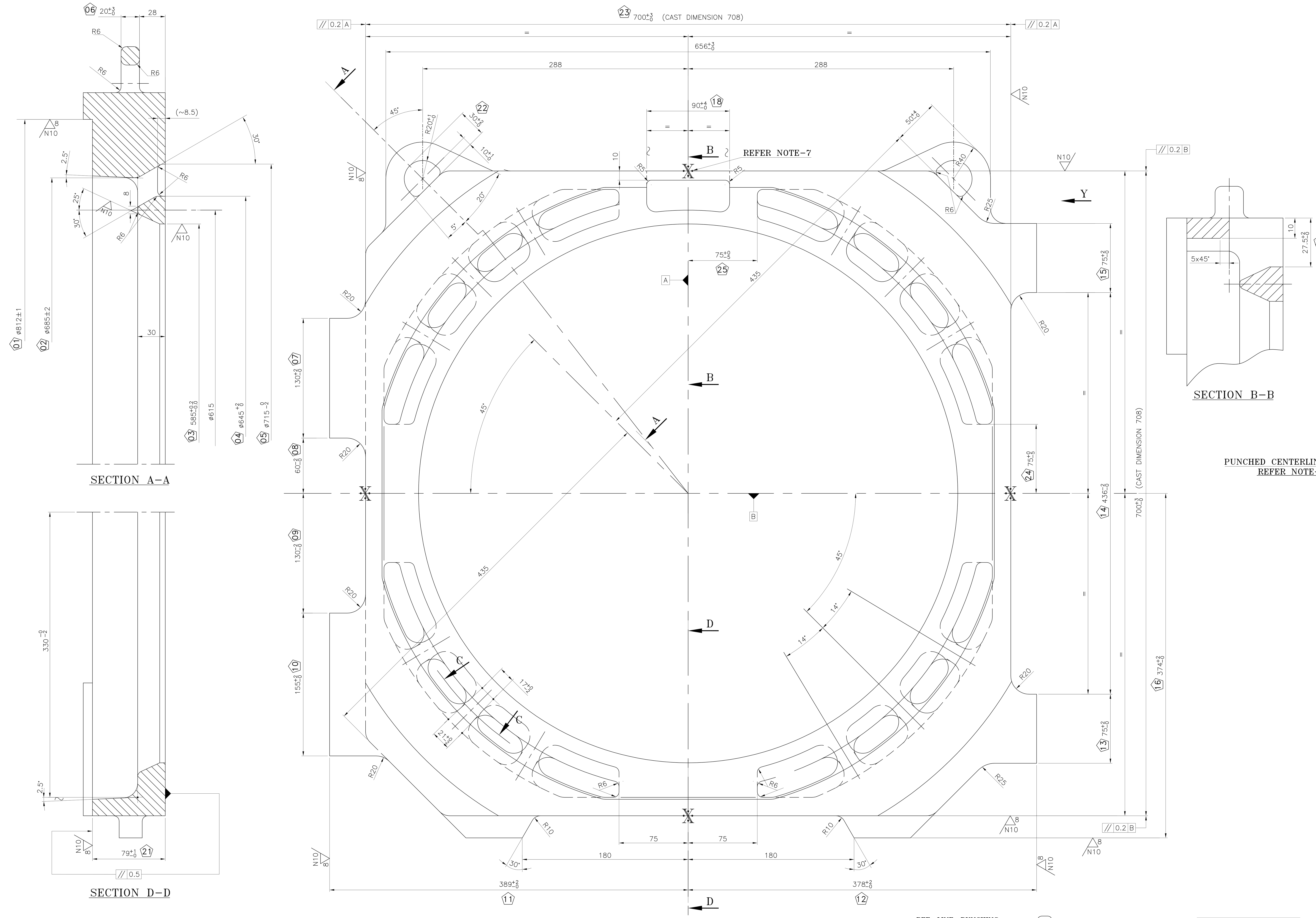

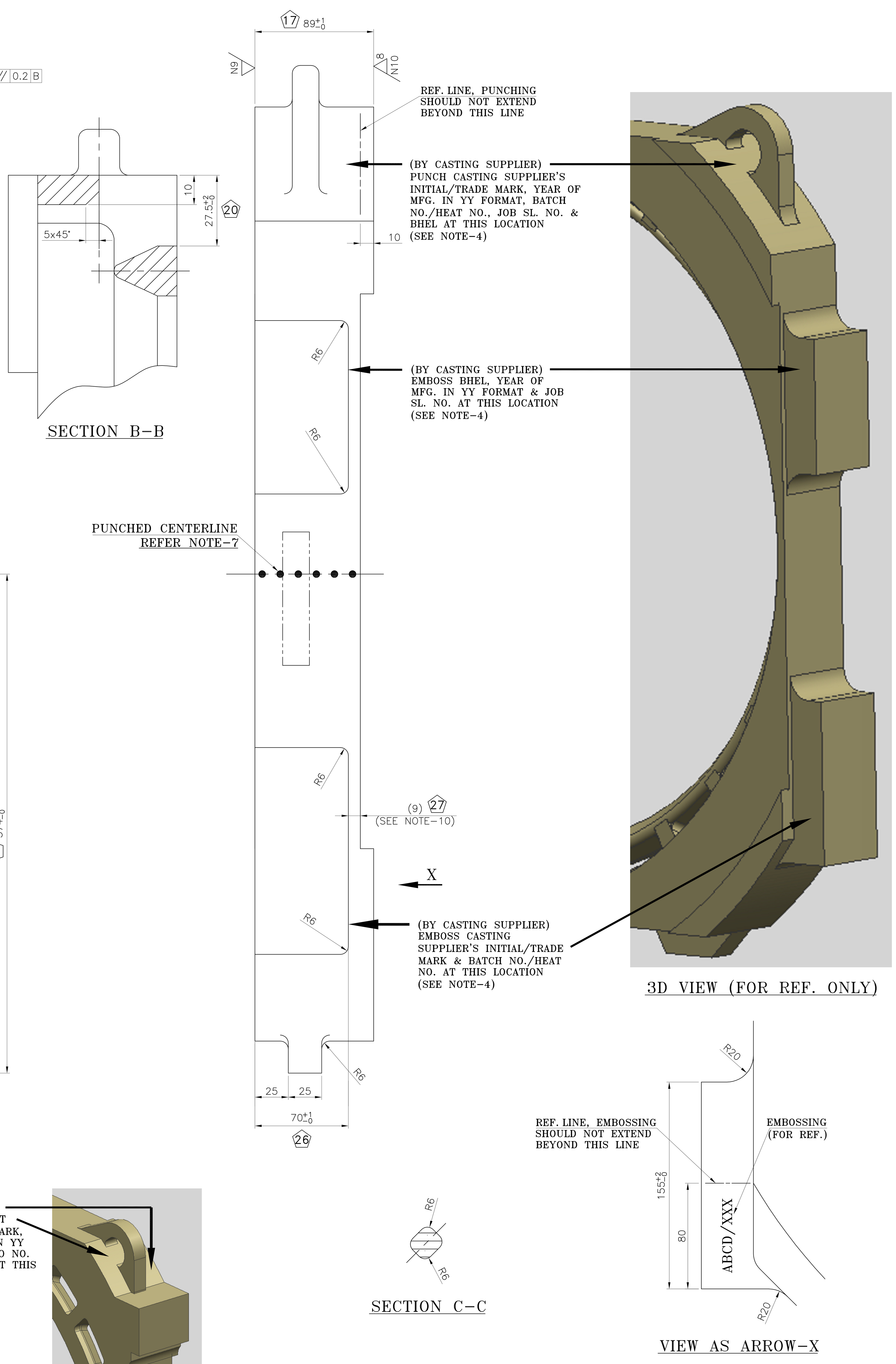

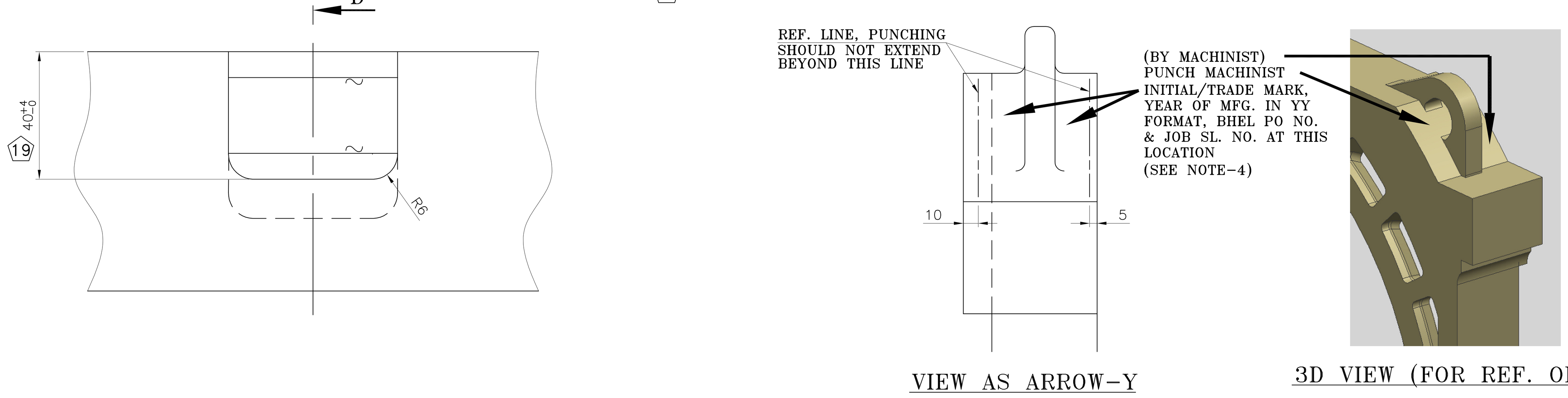

NOTES:-

1. CASTING SHALL BE CAREFULLY SCALED & CLEANED.
2. AIR POCKETS AND TERMINAL POCKET AT SECTION-B SHALL BE PROPERLY DRESSED & REQUIRED RADIUS SHALL BE CAREFULLY MAINTAINED.
3. FIRM SHOULD HAVE THEIR OWN FOUNDRY DULY APPROVED BY RDSO AS CLASS-A FOUNDRY FOR CASTING RAW MATERIAL OF SPECIFIED GRADE (CARBON STEEL CASTING TO IS : 1030 (1998) GRADE 230-450W OR LATEST) FOR ITEM STATOR CHAMBER DE & NDE OR THEY HAVE TO SUBMIT ADEQUATE DOCUMENTARY EVIDENCE REGARDING SOURCING OF RAW MATERIAL (CASTING) FROM RDSO APPROVED CLASS-A FOUNDRY ONLY.
4. (28) EMBOSSING & PUNCHING TO BE DONE AT THE SHOWN LOCATION BY CASTING SUPPLIER AND MACHINIST. SIZE OF EMBOSSING/PUNCHING TO BE 5-20mm. EMBOSSING & PUNCHING SHOULD BE LEGIBLE AND SHOULD NOT BE MACHINED/DAMAGED DURING MACHINING AND SHALL BE RETAINED.
5. QAP FOR CASTING TO BE AS PER QTM/QAP/VENDOR/13-14/001 (LATEST REV.).
6. ADDITIONAL MATERIAL SHALL NOT BE PROVIDED ON SURFACES WHERE MACHINING SYMBOL IS NOT INDICATED. TOLERANCES ON UNTOLERATED CASTING SURFACES SHALL BE AS PER IS:4897, CLASS-1.
7. X CENTERLINE TO BE PUNCHED ON STATOR CHAMBER ON ALL FOUR SIDE FACE ALONG THE WIDTH.
8. ALL 28 NOS. "⬠" MARKED DIMENSIONS AND NOTES ARE CRITICAL TO QUALITY (CTQ) & SL. NO. OF CTQ DIMENSIONS AND NOTES ARE INSCRIBED IN ⬠ e.g.(28).
9. FOR OTHER QUALITY REQUIREMENT WHICH ARE NOT CALLED IN DRAWING SPECIFICATION TM12545 TO BE REFERRED.
10. SURFACE FINISH OF UNMACHINED CASTED SURFACE TO BE AS PER IS:3073.
11. DIM. TO BE ENSURED IN ROUGH MACHINED CASTING SO THAT EMBOSSING IS NOT MACHINED DURING FINAL MACHINING.

REV.	DATE	ALTERED	CHECKED	APPROVED	ZONE	DESCRIPTION
15	26.11.22	VIJAY	MP	MP		IN TOOL LIST, TOOL NO. 1605206 & 1605207 ADDED. (TCM-361)
14	15.11.22	A.J.	ABHIJIT	ABHIJIT		NOTE 3 MODIFIED. LIFTING LUG DIMENSIONS MODIFIED.(REVISED IN LINE WITH CLW DRAWING NO. 1TWD.096.016 Alt.08).
13	24.8.21	SDB	ABHIJIT	ABHIJIT		DIM. 9 ADDED (G/15). NOTE-4 MODIFIED & NOTE-11 ADDED. VIEW-X ADDED. LOCATION OF EMBOSSING & PUNCHING MODIFIED.
12	27.7.21	SDB	ABHIJIT	ABHIJIT		LIFTING LUG VIEW MODIFIED. DIM. R45 & 673^{+3}_{0} WERE DIM. R50 & 676^{+3}_{0} NOTES RENUMBERED.
11	19.08.19	SDB	ABHIJIT	ABHIJIT		NOTES-4, 5 & 10 DELETED. NOTE-14 ADDED.
10	27.03.19	SDB	ABHIJIT	ABHIJIT		10x90 SLOT ADDED (C/9). NOTE-13 ADDED.
09	25.05.18	SDB	ABHIJIT	ABHIJIT		DIMS. 90^{+5}_{0} & 40^{+5}_{0} WERE 90 & 40 (REF. B/10 & L/8). IN SECTION-'BB' DIM. 27.5^{+2}_{0} WAS NOT ON. CRITICAL TO QUALITY DIMENSIONS ARE "⬠" MARKED & NUMBERED. NOTE-12 ADDED.
08	04.12.17	SDB	ABHIJIT	ABHIJIT		LIFTING LUG VIEW MODIFIED. NOTE-11 & SEC.-DD ADDED.
07	22.5.17	SDB	ABHIJIT	ABHIJIT		NOTES-7 TO 10 ADDED.
06	4.3.17	SDB	ABHIJIT	ABHIJIT	E,G/5	EMBOSSING/PUNCHING LOCATIONS ADDED.
05	6.10.16	SDB	AS	AS		TOOL NOS. 1577838 AND 1577839 ADDED. (TCM-349)
04	28.08.13					IN NOTE-4 LATEST REV. WAS ALT.01.
03	27.12.11					BOM IT.001 R.WT.115 KG & FINISH WT.94KG WERE NOT ON.
02	12.05.11					TM-11486 WAS ON 4TMS.096.059.
01	07.01.11					DRG. UPDATE & DIGITIZED.

SURFACE ROUGHNESS VALUE TO IS:3073	GRADE NUMBER	N1	N2	N3	N4	N5	N6	N7	N8	N9	N10	N11	N12
	Ra μ m	0.025	0.05	0.1	0.2	0.4	0.8	1.6	3.2	6.3	12.5	25	50
	SYMBOL	▽			▽			▽		▽		~	

QTY VAR 00	REMARKS	VAR. NO.	ITEM NO.	DESCRIPTION	STD	DRAWING NO.	IT.NO.	MATL. CODE	A C	UNIT WT.	QTY.	ZONE
				STATOR CHAMBER (NDE) CNC MACHD.				TM-11486				
	R.WT.-115KG			STATOR CHAMBER (NDE) (CAST)				TM-11486				

ADDITIONAL INFORMATION 1TWD.096.016, (ALT.8)

STATUS OF DRAWING

DISTRIBUTION OF PRINTS TME-1, TXM-3, TNX-1

TYPE OF PRODUCT OR NAME OF CUSTOMER/PROJECT: TRACTION MOTOR 6FRA-6068

BHARAT HEAVY ELECTRICALS LTD. BHOPAL

	NAME	SIGN	DATE
DRN.	BHAGAT	-sd-	01/09/10
CHD.	D.K	-sd-	01/09/10
APPD.	A.S	-sd-	01/09/10

DEPT. TME | CODE 405 | UNTOL. DIMS. GR. | SCALE | WEIGHT (K.G.) 94.0 | REF. TO ASSY. DRG. 0445 31 64 052 | ITEM NO. 001

TITLE: STATOR CHAMBER (NDE) CNC MACHD. (PARTLY FINISHED)

DRAWING NO. 0 445 31 64 054 | REV. 15 | SHT. NO. 01 | NO. OF SHT. 01

SIZE A0