FIRST ANGLE PROJECTION

(ALL DIMENSIONS ARE IN mm.)

THE INFORMATION ON THIS DOCUMENT IS THE PROPERTY OF BHARAT HEAVY ELECTRICALS LIMITED.
IT MUST NOT BE USED DIRECTLY OR INDIRECTLY IN ANY WAY DETRIMENTAL TO THE INTEREST OF THE COMPANY.

ड्रॉइंग सं./DRAWING NO. 34394280001

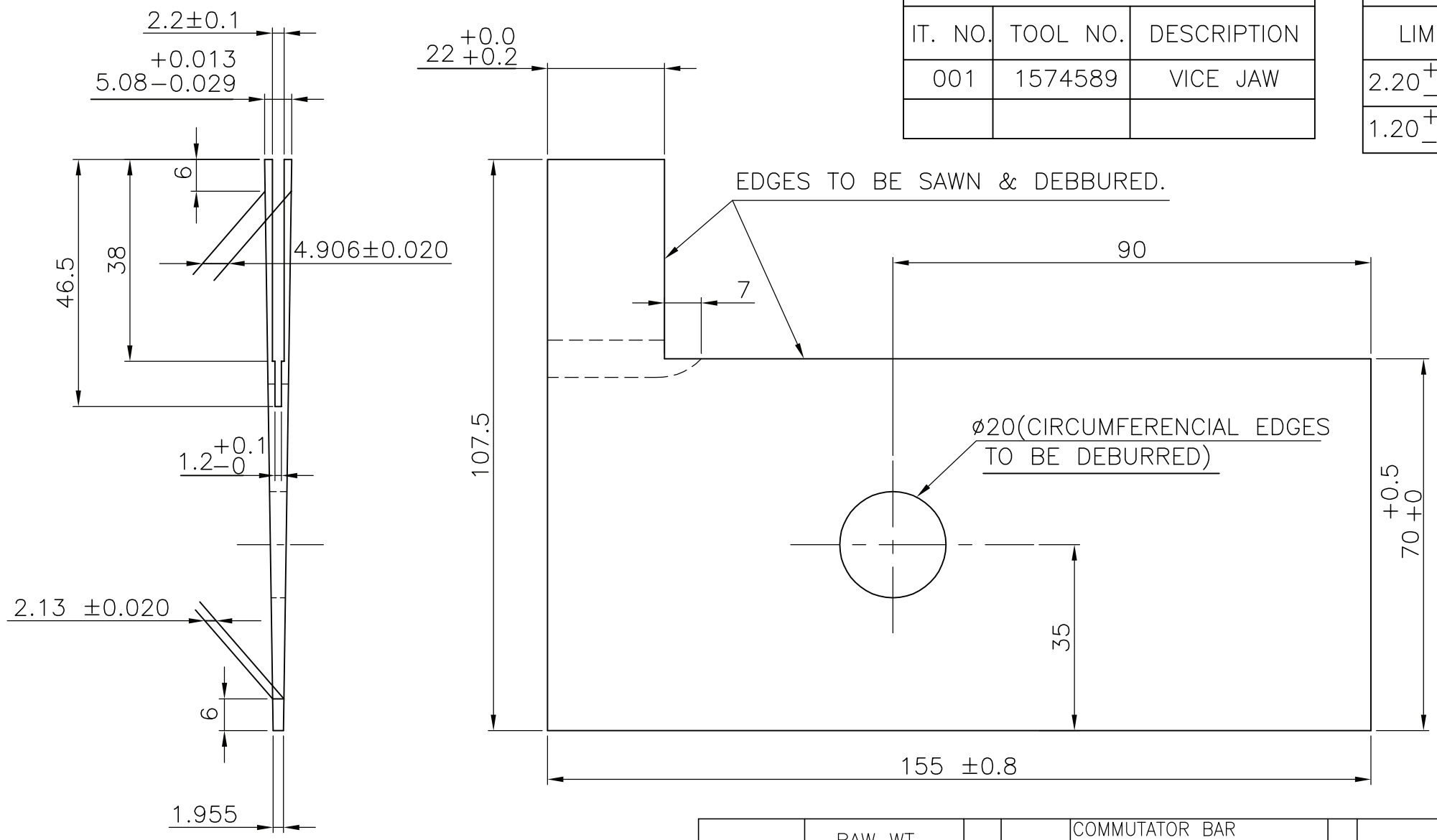

TOOL LIST

IT. NO.	TOOL NO.	DESCRIPTION
001	1574589	VICE JAW

GAUGE LIST

LIMIT	NOMINAL SIZE	TOOL NO.	IT. NO.	TYPE
2.20 +0.1 −0.1		1574442	001	SLITTING CUTTER
1.20 +0.1 −0.		1574443	002	SLITTING CUTTER

NOTES:–

1. SLITTING NOT TO BE DONE BY BLANK SUPPLIER.
2. TOLERANCE ON COMMUTATOR BARS TO BE TO BS 1434 UNLESS STATED OTHERWISE.
3. CONVEXITY / CONCAVITY TO BE WITHIN 0.020MM AS PER BS 1434 (CLAUSE 66).
4. REMOVE SHARP CORNERS.
5. DEPARTURE ANGLE TO BE WITHINE 0.0/0.020MM AS PER BS 1434 (CLAUSE 6.5).
6. NO. OF BARS PER COMMUTATOR 216.

VAR. 00	REMARKS	VAR NO.	ITEM NO.	DESCRIPTION	STD.	DRAWING NO.	IT. NO.	MATL. CODE.	A/C	UNIT	UNIT WT.	GS.
	RAW WT. 0.315KG.		001	COMMUTATOR BAR TRAPEZOIDAL SILVER BRG COPPER BAR				BP 12075		KG	0.28	
							VAR	MATL. SPCN.			QTY.	

CARD TYPE–3 → 28 | CARD TYPE–1 → 28 | CARD TYPE–2 → 28

ADDITIONAL INFORMATION

STATUS OF DRAWING

DISTRIBUTION OF PRINTS
TME–1
TXM–3
TNX–1

TYPE OF PRODUCT OR NAME OF CUSTOMER/PROJECT: TM 4303 BY,DY 25 KV BG AC EMU 1400HP DEMU

BHARAT HEAVY ELECTRICALS LTD. BHOPAL

	NAME	SIGN.	DATE
DRN.	SKG	Sd/–	25.05.99
CKD.	DK	Sd/–	25.05.99
APPD.	MV/AKD	Sd/–	25.05.99

NO. OF VAR.

REV	DATE	ALTERED / CHECKED / APPROVED	REV	DATE	ALTERED / CHECKED / APPROVED	REV	DATE	ALTERED / CHECKED / APPROVED
			06	05.12.12		05	09.07.09	–sd–

WT. 0.28 KG. WAS NOT ON. DRG. UPLOADED.

DRG. UPDATED & DIGITIZED.

DEPT.	GRADE OF UN. TOL	SCALE	WEIGHT (K.G.)	REF. TO ASSY.	ITEM NO.	NO. OF ITEM
TME	DIM.¢/M/F	NTS	0.28	24394280001	001	001
CODE. 405						

TITLE: COMMUTATOR BAR BLANK

DRAWING NO. 34394280001 REV. 06

SHT.NO 01 NO.OF.SHT. 01

REF. DRG. NO. | SIGN. & DATE | INVENTORY No.

403958/2021/HEP-TXM20500

A3