THIRD ANGLE PROJECTION

THE INFORMATION ON THIS DOCUMENT IS THE PROPERTY OF BHARAT HEAVY ELECTRICALS LIMITED. IT MUST NOT BE USED DIRECTLY OR INDIRECTLY IN any WAY DETRIMENTAL TO THE INTEREST OF THE COMPANY.

84/126

DRG. NO. 2 439 12 06 001

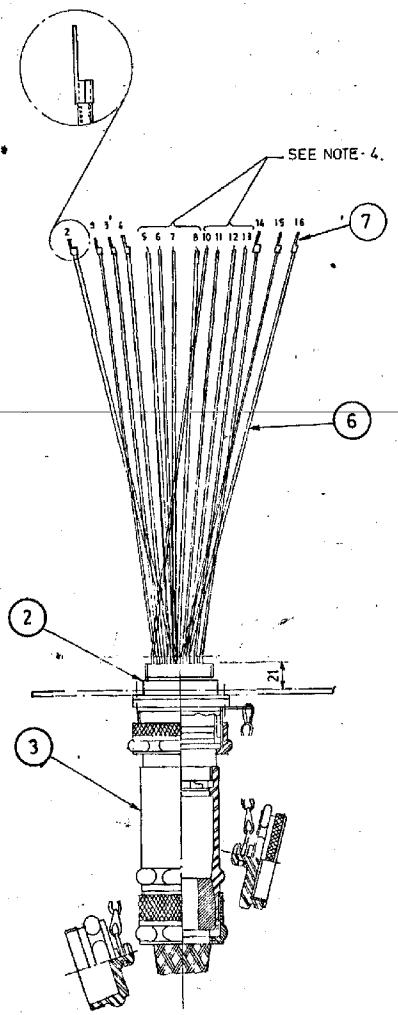

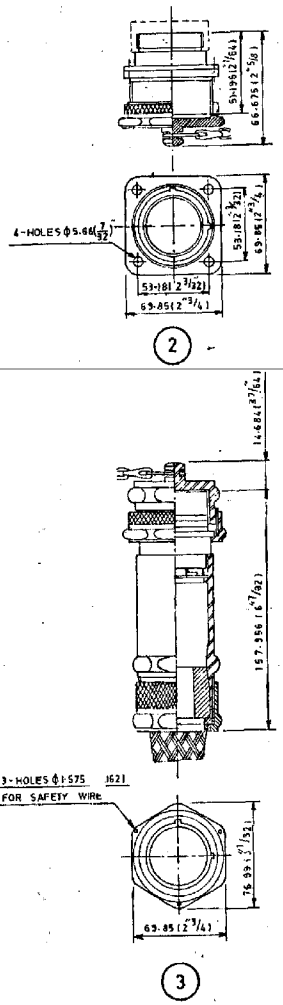

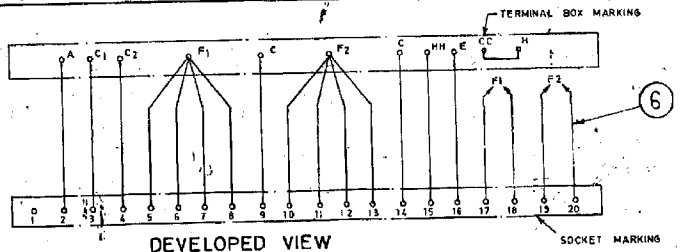

DEVELOPED VIEW
(SEE NOTE-1)

NOTE :-

1. SOCKET POLES TO BE CRIMMPED AFTER INSERTING CABLE ENDS IN TO THEM AS SHOWN IN DEVELOPED VIEW.
2. ~~ITEMS 2 TO 4 ARE PROPRIETORY ITEMS OF M/S PYLE NATIONAL COMPANY CHICAGO ILLINOIS TOGETHEIR PART NOS. ZREP-20-332PN, ZPEKLJ-2020-332SN & ZP-20-332PN RESPECTIVELY~~
3. SUITIBLE FERRULE TYPE CABLE MARKER TO BE USED TO IDENTIFY THE CABLE."
4. FREE ENDS OF CABLE NOS. 5,6,7,8,17,18&10,11,12,13,19,20 ARE TO BE TWISTED FIRMLY AND TINNED WITH 100% TIN.
5. TERMINAL TYPE-II ARE THE PROPRITARY ITEMS OF M/S DOWELS, BOMBAY 63 & CAN BE OBTAINED AGAINST CAT. NO. CP-19. THESE ARE TO BE FINALLY CRIMPED WITH THE HELP OF TOOL.

6(A) 20 PIN PLUG ASSEMBLY WITH FEMALE PINS (20 NOS) AND INSERT, AMPHENOL PART NO-ZPEKLJ-2020-332SN OR COOPER CROUSE (EATON) PART NO- CZPEKL-20-20-332SN.

(B) 20PIN SOCKET ASSEMBLY WITH MALE PINS (20 NOS) AND PIN INSERT, AMPHENOL PART NO-ZREP-20-332 PN OR COOPER CROUSE (EATON) PART NO-CZREP-20-332 PN.

PAR QD	REMARKS	IVAR NO.	ITEM NO.	DESCRIPTION	STD	DRAWING NO.	IT NO.	MATL CODE	UNIT	UNIT WT.	QTY.	GS	ZONE
07	SEE NOTE-5		007	COPPER PIN TYPE TERMINAL TYPE-II									
	SEE NOTE-3		006	7/029 SINGLE CORE CABLE 600 V. GR.							4500		
			~~005~~										
~~01~~	~~B.O.~~		~~004~~	~~PIN INSERT~~									
01	B.O. SEE NOTE-6(A)		003	PLUG ASSY.									
01	B.O. SEE NOTE-6(B)		002	SOCKET ASSY.									
	SEE NOTE-6	00	001	PLUG-SOCKET ASSY.						KG	0.950		

CARD TYPE-3 | CARD TYPE-1 | CARD TYPE-2

ADDITIONAL INFORMATION

STATUS OF DRAWING

DISTRIBUTION OF PRINTS
O/C - 1, PRX-1, TXM-3,
CIM - 4

TYPE OF PRODUCT OR NAME OF CUSTOMER/PROJECT: 4903 BX & BW, CX & CH / O.N.G.C. / O.I.L.

BHARAT HEAVY ELECTRICALS LTD
BHOPAL

	NAME	SIGN	DATE
DRN.	M.K. SAXENA		7.12.92
CHD.	P.G. SHENDE		
APPD.			

NO. OF VAR. 01

DEPT	GRADE OF UN TOL DIM. C/M/F	SCALE	WEIGHT (Kg)	REF. TO ASSY. ORG.	ITEM NO.	NO. OF ITEMS
ORE		N.T.S.		04391206002	27	07

CODE 425

TITLE: PLUG-SOCKET ASSY.

CARD CODE

DRAWING NO. 2 439 12 06 001 REV. 07

SHEET NO. 1 NO. OF SHEETS 1

SIZE A2

REV	DATE	ALT.	CHKD.
07	26-10-18	VK	SB

NOTE-2 DELETED & NOTE 6 ADDED. IT 004 DELETED.

REV.	DATE	ALT.	CHECK.
06	11-05-11	-	-

IT.001 WT. 0.950 KG WAS NOT ON.

REV	DATE	ALTERED	CHECKED
5	27-1-09		

IN HEADER REF. TO ASSY. DRG. 04391206002 WAS NOT ON.

REV.	DATE	ALTERED	CHECKED
04	8/5/03		

ZONE: RE PRATIPU

E.4700714 REF. DRG. NO.

SIGN. & DATE

INVENTORY NO.

161147/2021/HEP-TXM20500

FIRST ANGLE PROJECTION

(ALL DIMENSIONS ARE IN mm)

DRG.NO. 2 439 12 06 002

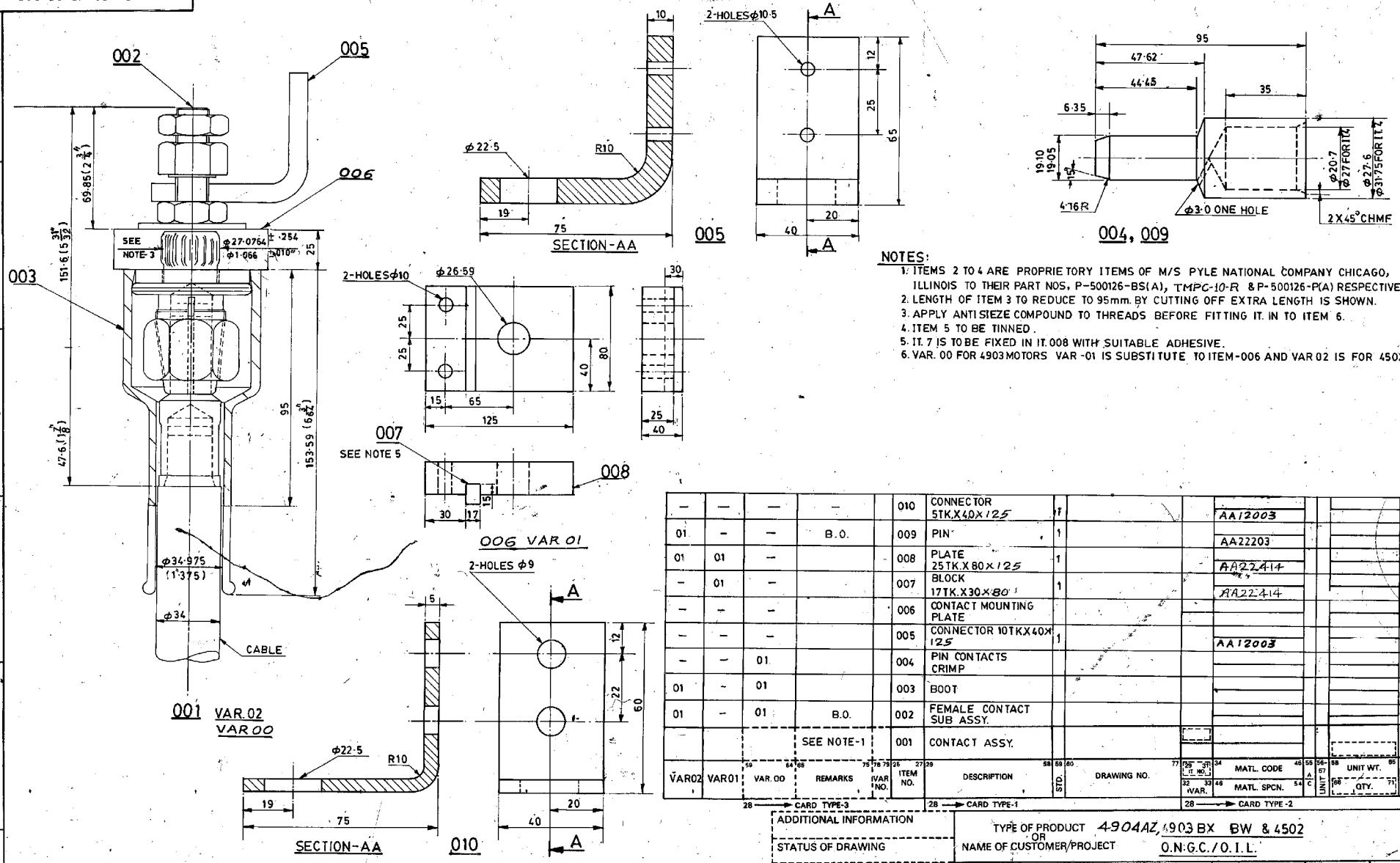

NOTES:

1. ITEMS 2 TO 4 ARE PROPRIETORY ITEMS OF M/S PYLE NATIONAL COMPANY CHICAGO, ILLINOIS TO THEIR PART NOS, P-500126-BS(A), TMPC-10-R & P-500126-P(A) RESPECTIVELY.
2. LENGTH OF ITEM 3 TO REDUCE TO 95mm. BY CUTTING OFF EXTRA LENGTH IS SHOWN.
3. APPLY ANTI SIEZE COMPOUND TO THREADS BEFORE FITTING IT. IN TO ITEM 6.
4. ITEM 5 TO BE TINNED.
5. IT. 7 IS TO BE FIXED IN IT. 008 WITH SUITABLE ADHESIVE.
6. VAR. 00 FOR 4903 MOTORS VAR -01 IS SUBSTITUTE TO ITEM-006 AND VAR 02 IS FOR 4502.

VAR02	VAR01	VAR. 00	REMARKS	VAR NO.	ITEM NO.	DESCRIPTION	STD.	DRAWING NO.	IT. NO. / VAR.	MATL. CODE / MATL. SPCN.	UNIT	UNIT WT. / QTY.	GS	ZONE
—	—	—	—		010	CONNECTOR 5TK.X40X125	1			AA12003				
01	—	—	B.O.		009	PIN	1			AA22203				
01	01	—			008	PLATE 25TK.X80X125	1			AA22414				
—	01	—			007	BLOCK 17TK.X30X80	1			AA22414				
—	—	—			006	CONTACT MOUNTING PLATE								
—	—	—			005	CONNECTOR 10TKX40X125	1			AA12003				
—	—	01			004	PIN CONTACTS CRIMP								
01	—	01			003	BOOT								
01	—	01	B.O.		002	FEMALE CONTACT SUB ASSY.								
—			SEE NOTE-1		001	CONTACT ASSY.								

28 → CARD TYPE-3 | 28 → CARD TYPE-1 | 28 → CARD TYPE-2

ADDITIONAL INFORMATION

STATUS OF DRAWING

DISTRIBUTION OF PRINTS
C/C-1 CIM-3
TXM-3 TIX-1
TNX-1

TYPE OF PRODUCT 4904AZ, 4903 BX BW & 4502
OR
NAME OF CUSTOMER/PROJECT O.N.G.C./O.I.L.

BHARAT HEAVY ELECTRICALS LTD
BHOPAL

	NAME	SIGN	DATE
DRN.	HNB		13-2-93
CHD.			
APPD.	P.G. Shende		13-2-93

NO. OF VAR. 03

REV.	DATE	ALTERED	CHECKED
01	30-04-93	SB	KKD
02	18-08-15	ALTD.	CHKD.

IN BOM ITS. NO-007 & 008 SPEC. AA22414 WERE AA22205.

ZONE: IN NOTE 1. PART NO. TMPC-10-R WAS PD-502-1(A)

DEPT. TME | CODE 405 | GRADE OF UN.TOL. DIM. C/M/F | SCALE NTS | WEIGHT (Kg)

REF. TO ASSY. DRG. 04391206002

ITEM NO. 9 13.4 51,53 | NO. OF ITEMS 010

TITLE: CONTACT ASSY.

CARD CODE

DRAWING NO. 2 439 12 06 002 | REV. 02

SHEET NO. | NO. OF SHEETS

S.E.S. SIZE A2

THE INFORMATION ON THIS DOCUMENT IS THE PROPERTY OF BHARAT HEAVY ELECTRICALS LIMITED. IT MUST NOT BE USED DIRECTLY OR INDIRECTLY IN ANY WAY DETRIMENTAL TO THE INTEREST OF THE COMPANY.

E4700715 REV.6 REF. DRG. NO.

SIGN. & DATE

INVENTORY NO.

161147/2021/HEP-TXM20500

85/126