FIRST ANGLE PROJECTION

(ALL DIMENSIONS ARE IN mm)

DRG. NO. 35215001785

UNSPECIFIED TOLERANCE SHALL BE:-
FOR MECHINING MEDIUM TO AA0230208

FINISH:- ZINC PLATE & PASSIVATE TO AA0673603 & AA0673604 (0.13 TK MIN)

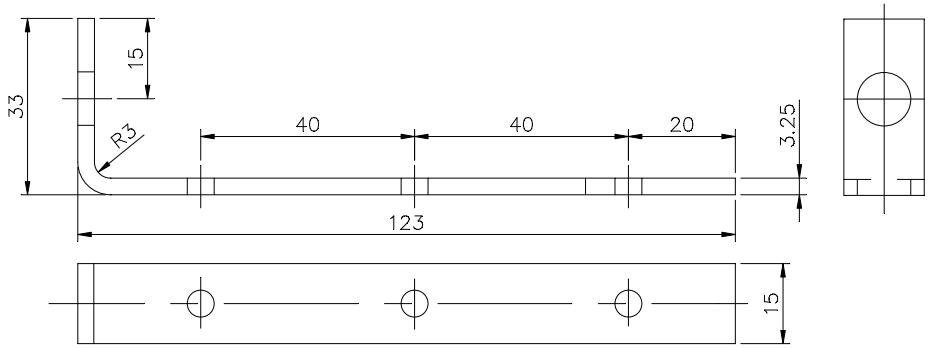

IT.001

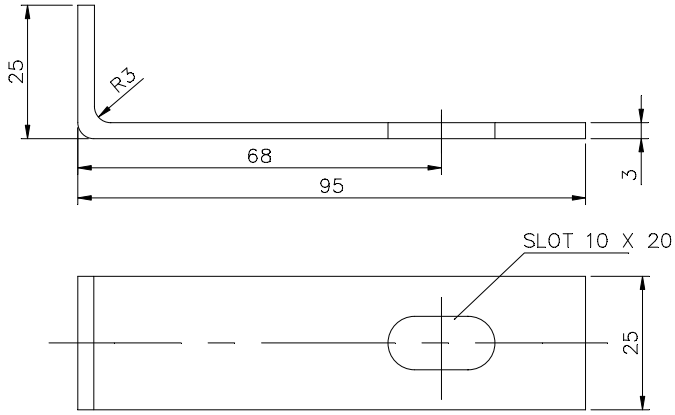

IT.002

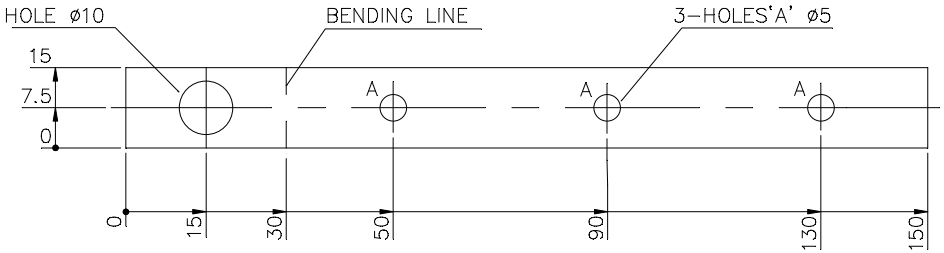

DEVELOPMENT OF IT.001

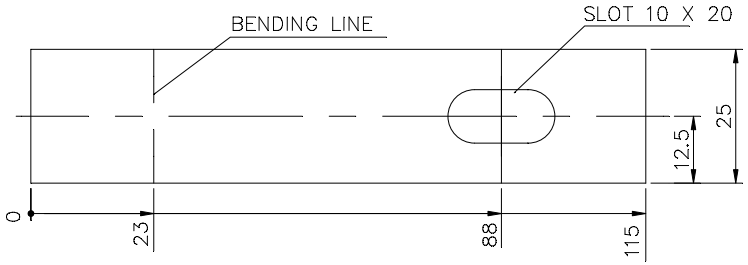

DEVELOPMENT OF IT.002

VAR00	REMARKS	VAR. NO.	ITEM NO.	DESCRIPTION	STD	DRAWING NO.	IT.NO. / VAR.	MATL. CODE / MATL. SPCN.	UNIT / UNIT	UNIT WT. / QTY.	GS	ZONE
			002	3 TK X 25X115 LG H. R. C. S. S			AA1011713136 / AA10113	NA	Kg			
	BP9089119590		001	3 TK X 15X150 LG H. R. C. S. S			AA1011713136 / AA10113	NA	Kg	0.053		

28 → CARD TYPE-3 28 → CARD TYPE-1 28 → CARD TYPE-2

ADDITIONAL INFORMATION

STATUS OF DRAWING

DISTRIBUTION OF PRINTS

O.COPY-----1
SWM--------3
TCX--------1

mRikn dk i-dkj ;k
xk-gd@ifj;kstuk dk uke
TYPE OF PRODUCT OR NAME OF CUSTOMER/PROJECT

VM-12

HAkjr gsoh bysfDV&dYl fyfeVsM
HAksiky
BHARAT HEAVY ELECTRICALS LTD.
BHOPAL

	uke@NAME	gLrk@SIGN	fnauka@DATE
cuk;k DRN	P.PARE	Sd/-	19.05.99
tWpk CKD	P.S.SONKER	Sd/-	20.05.99
vuqeksfnr APPD	JSP	Sd/-	25.05.99

osfj_ dh la[;k NO. OF VAR: -

foHAkx DEPT: SWE
dksM CODE: 409
vu_ Vky_ uki dh Js.kh UNTOL.DIMS. GR.: 3-250-01-00404
vuqikr SCALE: 1:1
HAkj fd_xk-_ WEIGHT (K.G.)
vis_ M&kbZax dk lanHAZ REF. TO ASSY. DRG.: 25213030569
en d-_ ITEM NO.: 013
en_ la[;k NO. OF ITEM: 001

'kh"kZ TITLE: TERMINAL BRACKET

vkjs[A d-_ DRAWING NO.: 3 521 50 01785
iqu_ REV: 03

i="B d-_ SHT. No. 01 i="Bksa dh la[;k NO. OF SHT. 01

REV.	DATE	ALTERED	S.D.MISHRA	REV.	DATE	ALTERED	P.PARE	REV.	DATE	ALTERED
03	05.02.11	CHECKED	AKHIL	02	16.11.09	CHECKED	AKHIL	01	22.4.05	CHECKED
		APPROVED	M.A.K.			APPROVED	M.A.K.			APPROVED
	ITEM 002 ADDED. (DCA 30189)				PAINT DETAILS CHANGED TO FINISH DETAILS (DCA 29341)				DRG REDRAWN (DCA 22910)	

THE INFORMATION ON THIS DOCUMENT IS THE PROPERTY OF BHARAT HEAVY ELECTRICALS LIMITED
IT MUST NOT BE USED DIRECTLY OR INDIRECTLY IN ANY WAY DETRIMENTAL TO THE INTEREST OF THE COMPANY

35215001785-02- 01 REF. DRG. NO.

SIGN. & DATE

INVENTORY NO.

A3

FIRST ANGLE PROJECTION (ALL DIMENSIONS ARE IN mm)

REV.	DATE	ALTERED	REV.	DATE	ALTERED sd/–	ADDITIONAL INFORMATION –
02	5.11.03	CHECKED	01	31.3.02	CHECKED sd/–	STATUS OF DRAWING B
		APPROVED			APPROVED sd/–	

DRG. REDRAWN (DCA. 20198)

MATL. CODE & SPECN. WAS BP 1010372211 & BP 10172 (DCA. 10386)

DISTRIBUTION OF PRINTS	SWE	SWM	TCX
	1	3	1

FINISH: –
ZINC PLATE & PASSIVATE TO AA 0673603 & AA 0673604 (0.013 Tk. Min.)

TOOL LIST: –
1 492 626 : DRILL JIG.

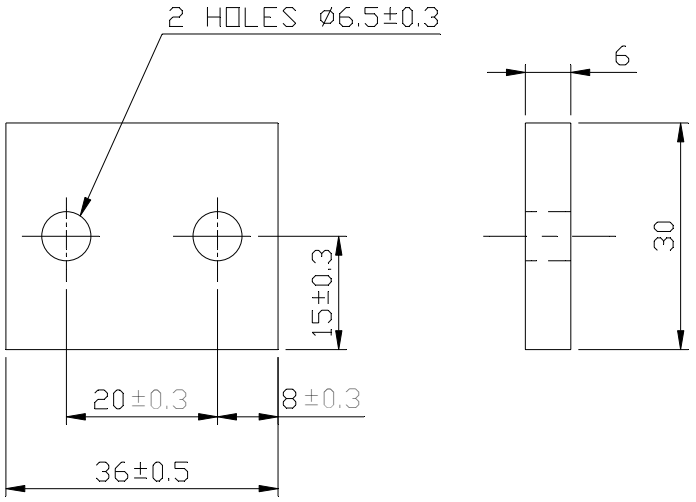

BP 9099431465	001	30 x 6 x 36 Lg. BRT. S. FLAT		AA 1010312219		KG.	0.0509
				AA 10112			001
65 REMARKS 75	25 27 ITEM NO.	29 DESCRIPTION 58	59 STD	34 MATL. CODE 45	55 ACC	56 UNIT	58 UNIT WT. 65
				46 MATL. SPCN. 54			68 QTY. 71

28 → CARD TYPE-3 | 28 → CARD TYPE-1 | 28 → CARD TYPE-2

HAkjr gsoh bysDV&hdYl fyfeVsM HAksiky
BHARAT HEAVY ELECTRICALS LTD.
BHOPAL

	NAME	SIGN	DATE
cuk;k DRN	BDV	Sd/–	16.9.82
tkapk CKD	MZG	Sd/–	18.9.82
vuqeksfnr APPD	BPN/RKG	Sd/–	25.9.82

osfj_ dh la[;k NO. OF VAR. –

foHAkx DEPT	vu_ Vky_ uki dh Js.kh UNTOL.DIMS. GR.		vuqikr SCALE	HAkj fd_xk–_ WEIGHT (K.G.)	vls_M&kbZax dk lanHAZ REF. TO ASSY. DRG.	en d–_ ITEM NO.	en la[;k NO. OF ITEM
SWE	M		1:1		3 521 10 01556	063	001
dksM CODE 409	AA 0230208						

'Ah"AZ TITLE: PLATE

vkjs[A d– DRAWING NO. 4 521 10 01542 | iqu@REV. 02

i="B d– SHT. No. 01 | i="Bksa dh la[;k NO. OF SHT. 01

45211001542–R02–S01 FILE NAME

REF. DRG. NO. :4HT 409 00246

SIGN. & DATE

INVENTORY NO.

THE INFORMATION ON THIS DOCUMENT IS THE PROPERTY OF BHARAT HEAVY ELECTRICALS LIMITED
IT MUST NOT BE USED DIRECTLY OR INDIRECTLY IN ANY WAY DETRIMENTAL TO THE INTEREST OF THE COMPANY

File No. HEP-SCROSWM(Misc)/96/2026-HEP-SWM20900 (Computer No. 301598)
Generated from eOffice by Pradeep Kumar Agrawal , ENGINEER(PKA)-MWX35702-HEP, ENGINEER, HEP-HEAVY ELECTRICALS PLANT (HEP) on 09/05/2026 11:19 am
SDIS: 9893018671

FIRST ANGLE PROJECTION

(ALL DIMENSIONS ARE IN mm)

DRG. NO. 35211001503

THE INFORMATION ON THIS DOCUMENT IS THE PROPERTY OF BHARAT HEAVY ELECTRICALS LIMITED
IT MUST NOT BE USED DIRECTLY OR INDIRECTLY IN ANY WAY DETRIMENTAL TO THE INTEREST OF THE COMPANY

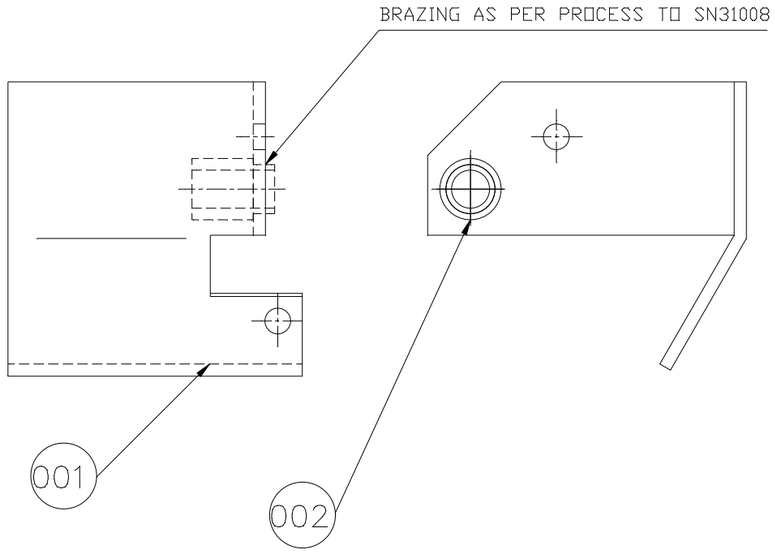

FINISH

ZINC PLATE & PASSIVATE TO AA0673603 & AA0673604.
(0.013 TK. MIN.)

PLATING AREA: –

80 CM^2 FOR VAR.00

NOTE

FOR LABEL DETAILS (SPRING CHARGED SPRING DISCHARGED)
REFER DRG. NO. 45212001612.

BP 9089431551–VAR 00

VAR00	REMARKS (65–75)	VAR. NO. (78 79)	ITEM NO. (25 27)	DESCRIPTION (29–58)	STD (59)	DRAWING NO. (60–77)	IT.NO. (29 31) / VAR. (32 33)	MATL. CODE (34–45) / MATL. SPCN. (46–54)	CIA (55)	UNIT (56 57)	UNIT WT. (58–65) / QTY. (68–71)	GS (72)	ZONE
001			002	BOSS		45211001725	001		NA	Kg	0.0126 / 001		
001			001	BRACKET		45211001572	001		NA	Kg	0.0678 / 001		

28 → CARD TYPE-3 28 → CARD TYPE-1 28 → CARD TYPE-2

ADDITIONAL INFORMATION

STATUS OF DRAWING

B

DISTRIBUTION OF PRINTS

O.COPY-----1
SWM--------3
TCX--------1

mRikn dk i–dkj ;k
xk–gd@ifj;kstuk dk uke
TYPE OF PRODUCT OR
NAME OF CUSTOMER/PROJECT

VCB

HAkjr gsoh bysfDV&dYl fyfeVsM
HAksiky
BHARAT HEAVY ELECTRICALS LTD.
BHOPAL

	uke@NAME	gLrk@SIGN	fnaukd@DATE
DRN	B.D.V.	SD/–	22.9.82
CKD	M.Z.G.	SD/–	29.9.82
APPD	BPN	SD/–	7.10.82

osfj_ dh la[;k NO. OF VAR: 00

REV.	DATE		
03	12.11.99	ALTERED	
		CHECKED	
		APPROVED	RM

REV.	DATE		
03	12.11.99	ALTERED	Sd/–
		CHECKED	Sd/–
		APPROVED	Sd/–

DRG. REDRAWN.

(DCA NO. 23996)

PLATING AREA FOR VAR. 00 ADDED.

(DCA NO. 9740)

foHAkx DEPT SWE
dksM CODE 409
vu_ Vky_ uki dh Js.kh UNTOL.DIMS. GR.
vuqikr SCALE 1:1
HAkj fd_xk–_ WEIGHT (K.G.)
vls_ M&kbZax dk lanHAZ REF. TO ASSY. DRG. 35211001556
en d–_ ITEM NO. 029
en_ la[;k NO. OF ITEM 002

'kh"AZ TITLE

INDICATOR

vkjs[A d–DRAWING NO. 35211001503
iqu_@REV 04

i="B d–SHT. No. 01
i="Bksa dh la[;k NO. OF SHT. 01

INVENTORY NO.

SIGN. & DATE

REF. DRG. NO. 3 –00– 01

File No. HEP-SCR0SWM(Misc)/96/2026-HEP-SWM20900 (Computer No. 301598)
Generated from eOffice by Pradeep Kumar Agrawal , ENGINEER(PKA)-MWX35702-HEP, ENGINEER, HEP-HEAVY ELECTRICALS PLANT (HEP) on 09/05/2026 11:19 am

A3

FIRST ANGLE PROJECTION (ALL DIMENSIONS ARE IN mm)

THE INFORMATION ON THIS DOCUMENT IS THE PROPERTY OF BHARAT HEAVY ELECTRICALS LIMITED
IT MUST NOT BE USED DIRECTLY OR INDIRECTLY IN ANY WAY DETRIMENTAL TO THE INTEREST OF THE COMPANY

REV.	DATE	ALTERED	REV.	DATE	ALTERED sd/–	ADDITIONAL INFORMATION –
		CHECKED	01	5.11.03	CHECKED sd/–	STATUS OF DRAWING B
		APPROVED			APPROVED sd/–	

DRG. REDRAWN

(DCA.20225)

DISTRIBUTION OF PRINTS	SWE	SWM	TCX
	1	3	1

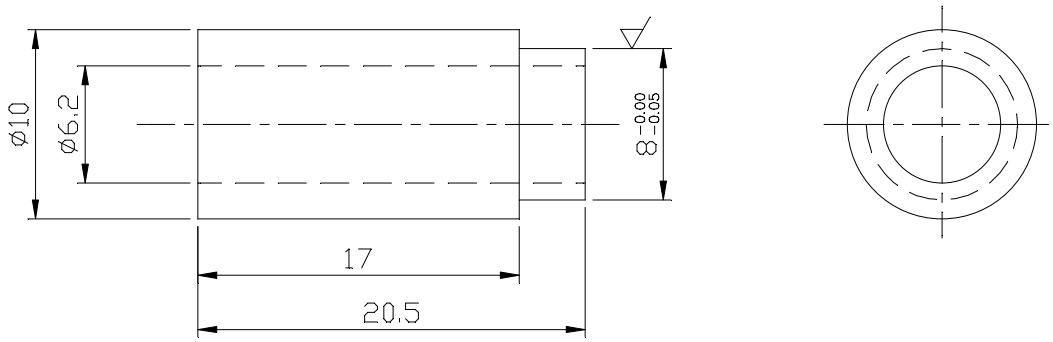

FILE NAME							
4521100172 5-R01-S01	–	001	ø10 x 20.5 Lg. STRL. ST. STD. QLTY.	AA 1010208063 / AA 10108	KG.	0.013 / 001

REMARKS (65–75)	ITEM NO. (25–27)	DESCRIPTION (29–58)	STD (59)	MATL. CODE (34–45) / MATL. SPCN. (46–54)	A/C (55)	UNIT (56)	UNIT WT. (58–65) / QTY. (68–71)

28 → CARD TYPE-3 | 28 → CARD TYPE-1 | 28 → CARD TYPE-2

SIGN. & DATE

HAkjr gsoh bysDV&hdYl fyfeVsM
HAksiky
BHARAT HEAVY ELECTRICALS LTD.
BHOPAL

	uke NAME	qLrk_ SIGN	fnuqkd DATE	osfj_ dh la[;k NO. OF VAR.
cuk;k DRN	R.R.G	Sd/–	1.11.96	–
tkapk CKD	M.S.B	Sd/–	6.11.96	
vuqeksfnr APPD	P.L.B	Sd/–	7.11.96	

INVENTORY NO.

foHAkx DEPT	vu_ Vky_ uki dh Js.kh UNTOL.DIMS. GR.		vuqikr SCALE	HAkj fd_xk–_ WEIGHT (K.G.)	vls_M&kbZax dk lanHAZ REF. TO ASSY. DRG.	en d–_ ITEM NO.	en la[;k NO. OF ITEM
SWE	M		2:1	0.007	3 521 10 01503	002	001
dksM CODE 409	–						

'Ah"AZ CODE: BOSS

vkjs[A d– DRAWING NO. 4 521 10 01725 | iqu@REV. 01

i="B d– SHT. No. 01 | i="Bksa dh la[;k NO. OF SHT. 01

File No. HEP-SCROSWM(Misc)/96/2026-HEP-SWM20900 (Computer No. 301598)
Generated from eOffice by Pradeep Kumar Agrawal , ENGINEER(PKA)-MWX35702-HEP, ENGINEER, HEP-HEAVY ELECTRICALS PLANT (HEP) on 09/05/2026 11:19 am
SDIS: 9893018671

FIRST ANGLE PROJECTION

(ALL DIMENSIONS ARE IN mm)

REV.	DATE	ALTERED	REV.	DATE	ALTERED	
		CHECKED	03	03.04.03	CHECKED	

DRG. REDRAWN.

(DCA 12266)

ADDITIONAL INFORMATION

STATUS OF DRAWING: B

DISTRIBUTION OF PRINTS: O/C-1 SWM-3 TCX-1

THE INFORMATION ON THIS DOCUMENT IS THE PROPERTY OF BHARAT HEAVY ELECTRICALS LIMITED.
IT MUST NOT BE USED DIRECTLY OR INDIRECTLY IN ANY WAY DETRIMENTAL TO THE INTEREST OF THE COMPANY.

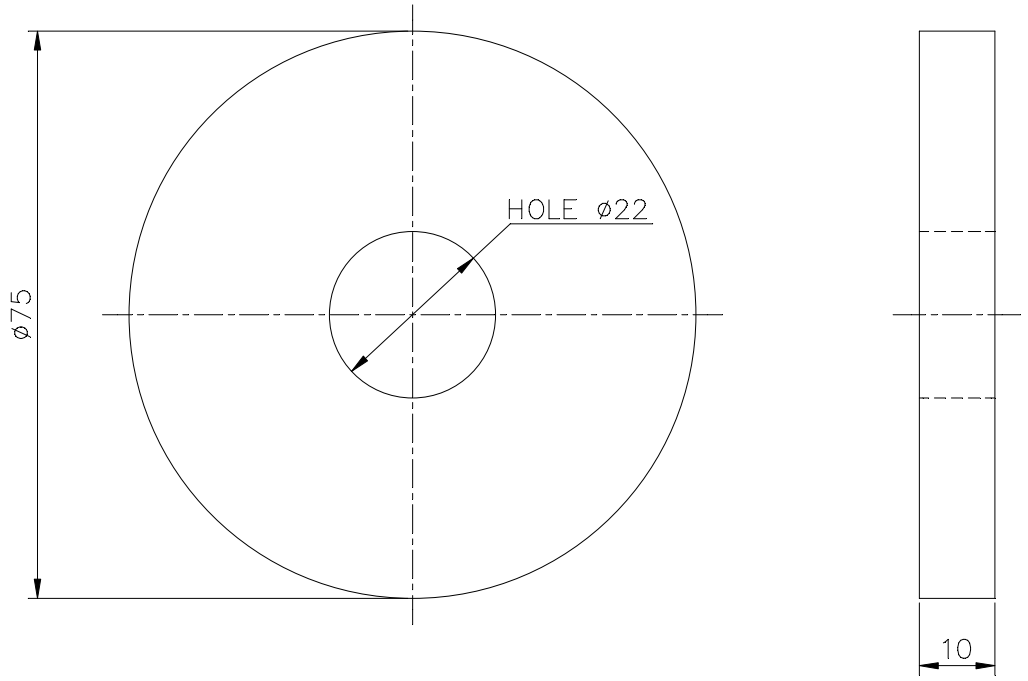

ITEM 001

NOTE: –

REMOVE SHARP EDGES.

FINISH: –

ZINC PLATE AND PASSIVATE TO AA 0673603
& AA 0673604 (0.013 TO 0.015 TK.)

UNSPECIFIED TOLERANCE MEDIUM TO AA 0230208

REF. DRG. No.	REMARKS	ITEM NO.	DESCRIPTION	STD.	MATL. CODE / MATL. SPECN	A-C	UNITS	UNIT WT. / QTY.
45096901506-R03-S01	BP9099268050	001	10 TK. x 75 x 75 LG. BRT. ST. BAR		AA 1010212290 / AA 10112		KG.	0.347 / 001

SIGN & DATE

	NAME	SIGN.	DATE	NO.OF VAR
DRN	R.R.G.	Sd/–	–	
CHD	C.R.K.	Sd/–	–	
APPD	M.V.D.	Sd/–	17.05.80	–

BHATAT HEAVY ELECTRICALS LIMITED
BHOPAL

DEPT.	UN. TOL.DIM.GR.	SCALE	WEIGHT (Kg.)	REF. TO ASSY. DRG.	ITEM NO.	NO.OF ITEMS
SWE	M	1:1		05096901500	007	001
CODE 409	AA 0230208					

TITLE: SPACER

DRAWING No. 4 509 69 01506 REV. 03

SHEET NO. 01 NO.OF SHEETS 01

INVENTORY No.

SIZE A4

File No. HEP-SCROSWM(Misc)/96/2026-HEP-SWM20900 (Computer No. 301598)
Generated from eOffice by Pradeep Kumar Agrawal , ENGINEER(PKA)-MWX35702-HEP, ENGINEER, HEP-HEAVY ELECTRICALS PLANT (HEP) on 09/05/2026 11:19 am

FIRST ANGLE PROJECTION (ALL DIMENSIONS ARE IN mm)

REV.	DATE	ALTERED / CHECKED / APPROVED	REV.	DATE	ALTERED / CHECKED / APPROVED
			01	8.12.04	APPROVED HRP

DRG. REDRAWN.

(DCA NO. 24144)

ADDITIONAL INFORMATION

STATUS OF DRAWING

DISTRIBUTION OF PRINTS: D.C.-1 SWM-3 TCX-1

THE INFORMATION ON THIS DOCUMENT IS THE PROPERTY OF BHARAT HEAVY ELECTRICALS LIMITED
IT MUST NOT BE USED DIRECTLY OR INDIRECTLY IN ANY WAY DETRIMENTAL TO THE INTEREST OF THE COMPANY

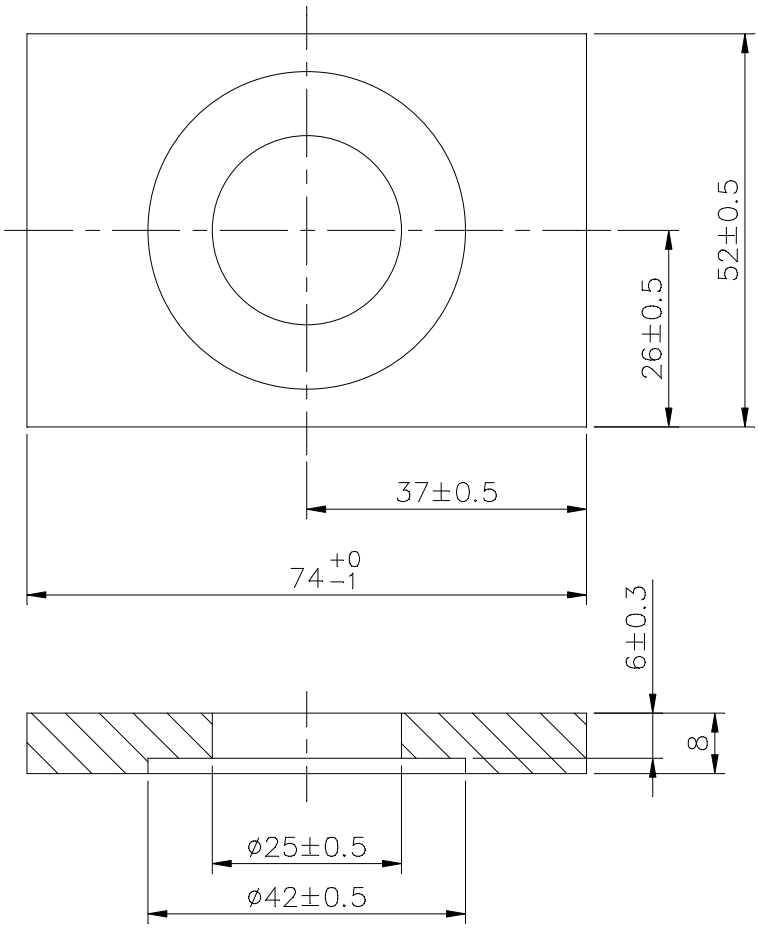

FINISH :- ZINC PLATE AND PASSIVATE TO AA0673603 & AA0673604 (0.013 TO 0.015 Tk. MIN.)

REF. DRG. NO.

REMARKS (75)	ITEM NO. (25 27)	DESCRIPTION (29 58)	STD (59)	MATL. CODE (46 54) / MATL. SPCN.	CIA (55)	UNIT (56)	UNIT WT. (68 71) / QTY.
	001	8 TK.x52x74 STRUCTURAL S. PLATE		AA1011808056 / AA10108			

28 → CARD TYPE-3 | 28 → CARD TYPE-1 | 28 → CARD TYPE-2

SIGN. & DATE

HAkjr gsoh bysDV&hdYl fyfeVsM HAksiky
BHARAT HEAVY ELECTRICALS LTD.
BHOPAL

	NAME	SIGN	DATE
cuk;k DRN	CHU	Sd/-	-
tkapk CKD	MZG	Sd/-	5.12.82
vuqeksfnr APPD	BPN/RKG	Sd/-	17.12.82

osfj_ dh la[;k NO. OF VAR. -

INVENTORY NO.

foHAkx DEPT	vu_ Vky_ uki dh Js.kh UNTOL.DIMS. GR.		vuqikr SCALE	HAkj fd_xk-_ WEIGHT (K.G.)	vls_M&kbZax dk lanHAZ REF. TO ASSY. DRG.	en d-_ ITEM NO.	en la[;k NO. OF ITEM
SWE	M		1:1	-	35211001560	015	001
dksM CODE 409	AA0230208						

'Ah"AZ dk TITLE: PLATE

vkjs[A d- DRAWING NO.: 4 521 10 01610

iqu@REV. 01

i="B d- SHT. No. 01 i="Bksa dh la[;k NO. OF SHT. 01

File No. HEP-SCROSWM(Misc)/96/2026-HEP-SWM20900 (Computer No. 301598)
Generated from eOffice by Pradeep Kumar Agrawal , ENGINEER(PKA)-MWX35702-HEP, ENGINEER, HEP-HEAVY ELECTRICALS PLANT (HEP) on 09/05/2026 11:19 am

FIRST ANGLE PROJECTION (ALL DIMENSIONS ARE IN mm)

REV.	DATE			REV.	DATE		
08	03.09.18	ALTERED	SKG	07	14.05.11	ALTERED	BKT
		CHECKED	AKHIL			CHECKED	RKB
		APPROVED	AD			APPROVED	SK
ITEM 002 DIM UPDATED. (DCA 35607)				SHT.02 ADDED. (DCA 30364)			

ADDITIONAL INFORMATION

STATUS OF DRAWING: B

DISTRIBUTION OF PRINTS: O.C.–1 SWM–3 TCX–1

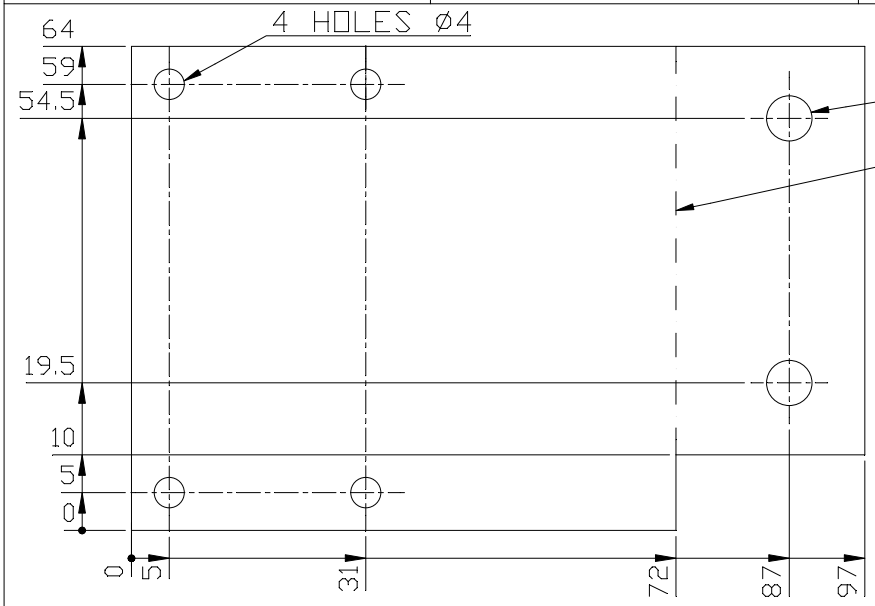

FINISH :–
ZINC PLATED & PASSIVATE TO PRS. AA0673603 & AA0673604 (0.013 TK. MIN.)

DEVELOPED VIEW
PLATING AREA 149.90 SQ. CM.

NOTE :–
ALL CORNERS TO BE ROUNDED OFF.

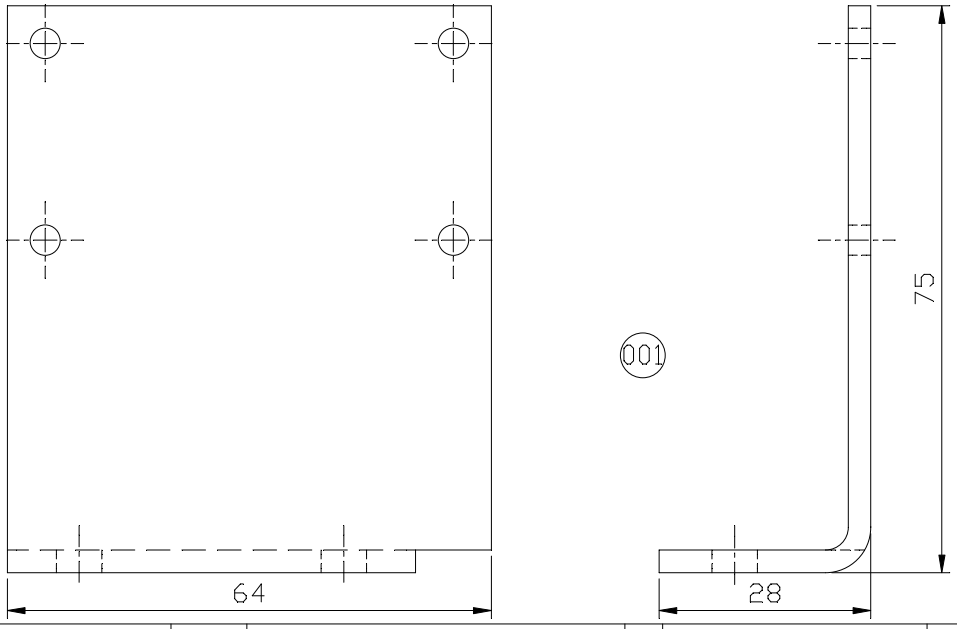

REMARKS	ITEM NO.	DESCRIPTION	STD	MATL. CODE / MATL. SPCN.	CIA	UNIT	UNIT WT. / QTY.
	001	3TK. x 64 x 97 LG. H.R.C.S. STEEL SHEET		AA1011713136 / AA10113		KG.	0.15 / 001

28 → CARD TYPE-3 | 28 → CARD TYPE-1 | 28 → CARD TYPE-2

HAkjr gsoh bysDV&hdYl fyfeVsM HAksiky
BHARAT HEAVY ELECTRICALS LTD.
BHOPAL

	NAME	SIGN	DATE
cuk;k DRN	M.P.	Sd/–	25.08.84
tkapk CKD	A.S.N.	Sd/–	26.08.84
vuqeksfnr APPD	R.K.B.	Sd/–	28.08.84

osfj_ dh la[;k NO. OF VAR.: –

foHAkx DEPT	vu_ Vky_ uki dh Js.kh UNTOL.DIMS. GR.		vuqikr SCALE	HAkj fd_xk–_ WEIGHT (K.G.)	vls_M&kbZax dk lanHAZ REF. TO ASSY. DRG.	en d–_ ITEM NO.	en la[;k NO. OF ITEM
SWE	M		1:1		05213030502	075	002
dksM CODE 409	AA0230208						

'Ah"AZ TITLE: COUNTER BRACKET

vkjs[A d–DRAWING NO.: 45213030602

iqu@REV.: 08

i="B d–SHT. No. 01 i="Bksa dh la[;k NO. OF SHT. 02

THE INFORMATION ON THIS DOCUMENT IS THE PROPERTY OF BHARAT HEAVY ELECTRICALS LIMITED
IT MUST NOT BE USED DIRECTLY OR INDIRECTLY IN ANY WAY DETRIMENTAL TO THE INTEREST OF THE COMPANY

REF. DRG. NO.
SIGN. & DATE
INVENTORY NO.

File No. HEP-SCROSWM(Misc)/96/2026-HEP-SWM20900 (Computer No. 301598)
Generated from eOffice by Pradeep Kumar Agrawal , ENGINEER(PKA)-MWX35702-HEP, ENGINEER, HEP-HEAVY ELECTRICALS PLANT (HEP) on 09/05/2026 11:19 am

FIRST ANGLE PROJECTION (ALL DIMENSIONS ARE IN mm)

REV.	DATE			REV.	DATE			ADDITIONAL INFORMATION
08	03.09.18	ALTERED	SKG	07	14.05.11	ALTERED	BKT	
		CHECKED	AKHIL			CHECKED	RKB	
		APPROVED	AD			APPROVED	SK	
ITEM 002 DIM UPDATED (DCA 35607)				SHT.02 ADDED. (DCA 30364)				STATUS OF DRAWING: B
								DISTRIBUTION OF PRINTS: O.C.–1 SWM–3 TCX–1

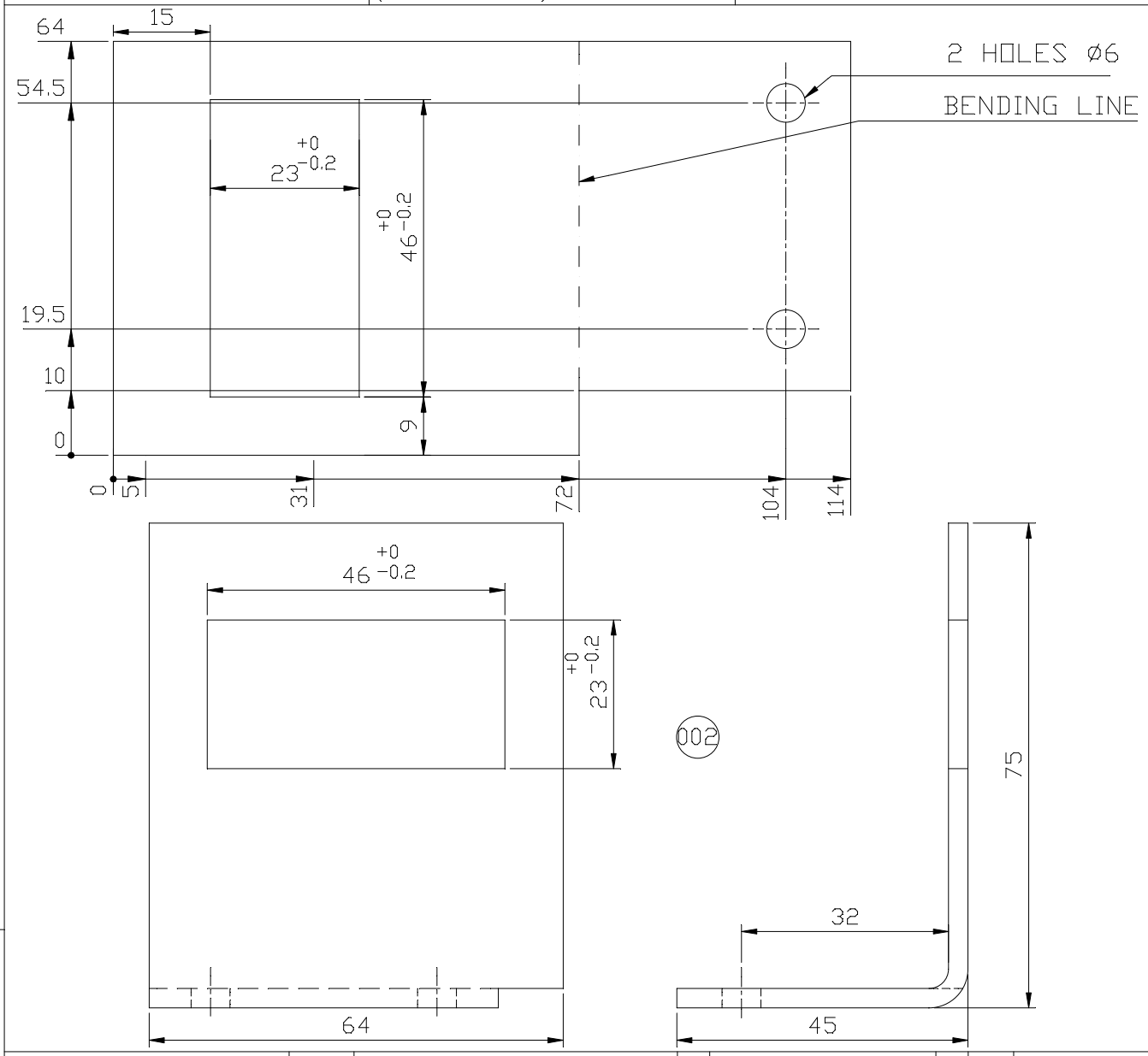

	002	3TK. x 64 x 114 LG. H.R.C.S. STEEL SHEET	AA1011713136		KG.	0.17
			AA10113			001
REMARKS (75)	ITEM NO. (25–27)	DESCRIPTION (29–58)	STD (59)	MATL. CODE (46–54) / MATL. SPCN.	C I A (55)	UNIT (56) / UNIT WT. (68–71) / QTY.
28 → CARD TYPE-3		28 → CARD TYPE-1		28 → CARD TYPE-2		

HAkjr gsoh bysDV&hdYl fyfeVsM HAksiky BHARAT HEAVY ELECTRICALS LTD. BHOPAL	uke NAME	qLrk_ SIGN	fnuqkd DATE	osfj_ dh la[;k NO. OF VAR.
	cuk;k DRN BKT	Sd/–	14.05.11	–
	tkapk CKD RKB	Sd/–	14.05.11	
	vuqeksfnr APPD SK	Sd/–	14.05.11	

foHAkx DEPT	vu_ Vky_ uki dh Js.kh UNTOL.DIMS. GR.		vuqikr SCALE	HAkj fd_xk–_ WEIGHT (K.G.)	vls_M&kbZax dk lanHAZ REF. TO ASSY. DRG.	en d–_ ITEM NO.	en la[;k NO. OF ITEM
SWE	M		1:1		05213030502	075	002
dksM CODE 409	AA0230208						

'Ah"AZ TITLE	vkjs[A d–DRAWING NO.	iqu@REV.
COUNTER BRACKET	45213030602	08
	i="B d–SHT. No. 02	i="Bksa dh la[;k NO. OF SHT. 02

THE INFORMATION ON THIS DOCUMENT IS THE PROPERTY OF BHARAT HEAVY ELECTRICALS LIMITED
IT MUST NOT BE USED DIRECTLY OR INDIRECTLY IN ANY WAY DETRIMENTAL TO THE INTEREST OF THE COMPANY

REF. DRG. NO.

SIGN. & DATE

INVENTORY NO.

File No. HEP-SCROSWM(Misc)/96/2026-HEP-SWM20900 (Computer No. 301598)
Generated from eOffice by Pradeep Kumar Agrawal , ENGINEER(PKA)-MWX35702-HEP, ENGINEER, HEP-HEAVY ELECTRICALS PLANT (HEP) on 09/05/2026 11:19 am

FIRST ANGLE PROJECTION

(ALL DIMENSIONS ARE IN mm)

DRG. NO. 35211001509

VAR–00: – HAND CRANK FOR SPRING CHARGING TO BP9099436599
VAR–01: – HAND CRANK FOR OPERATING LEADSCREW/SPRING CHARGING TO BP9099112122
VAR–02: – HAND CRANK FOR OPERATING LEADSCREW/SPRING CHARGING TO BP9089475079
VAR–03: – HAND CRANK FOR OPERATING LEADSCREW/SPRING CHARGING FOR VM12

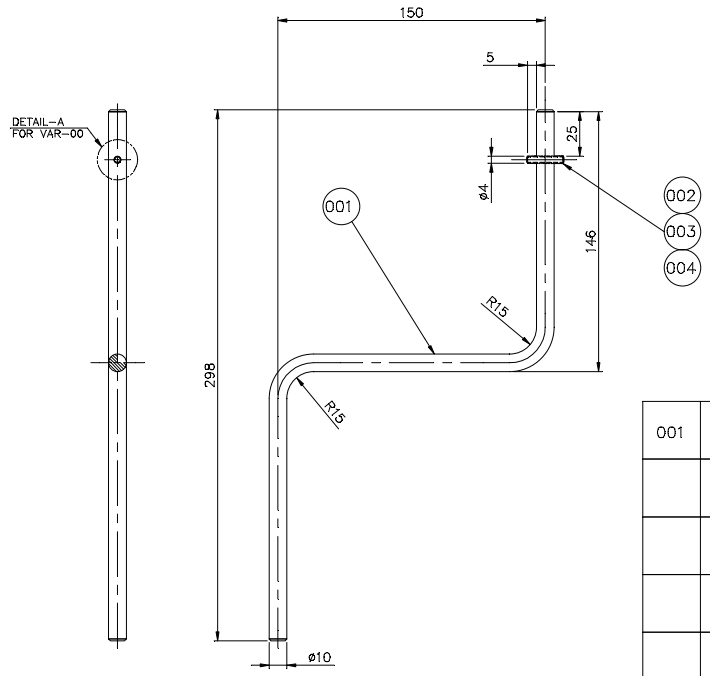

VAR–00&01

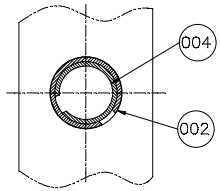

DETAIL–A
FOR VAR–00

VAR03	VAR02	VAR01	VAR00	REMARKS (65–75)	VAR. NO. (78 79)	ITEM NO. (25–27)	DESCRIPTION (29–58)	STD (59)	DRAWING NO. (60–77)	IT.NO. (29–31) / VAR. (32 33)	MATL. CODE (34–45) / MATL. SPCN. (46–54)	C.I.A (55)	UNIT (56 57)	UNIT WT. (58–65) / QTY. (68–71)	CS (72)	ZONE
001		–	–			008	SOCKET		45222001523	002		NA	kg	0.125 / 001		
	002	–	–			007	ROLL PIN		E9211016	006		NA	kg	0.001 / 001		
	001	–	–			006	PLATE		45212001522	001		NA	kg	001		
	001	–	–			005	HAND CRANK		35211001844	002		NA	kg	0.263 / 001		
		–	001			004	ROLL PIN		E9211016	014		NA	kg	0.001 / 001		
		001	–			003	PIN CYLINDRICAL END 4DIAX20LG				AA7171001199	NA	kg	0.001 / 001		
		–	001			002	ROLL PIN		E9211016	005		NA	kg	0.001 / 001		
001	–	001	001			001	HAND CRANK		35211001844	001		NA	kg	0.263 / 001		

→ 28 CARD TYPE–3 28 → CARD TYPE–1 28 → CARD TYPE–2

THE INFORMATION ON THIS DOCUMENT IS THE PROPERTY OF BHARAT HEAVY ELECTRICALS LIMITED
IT MUST NOT BE USED DIRECTLY OR INDIRECTLY IN ANY WAY DETRIMENTAL TO THE INTEREST OF THE COMPANY

35211001509 –11 – 01
REF. DRG. NO.

SIGN. & DATE

REV.	DATE	ALTERED	SKG	REV.	DATE	ALTERED	SKG	REV.	DATE	ALTERED	
11	08.04.23	CHECKED	AKHIL	10	31.03.16	CHECKED	AKHIL			CHECKED	
		APPROVED	AD			APPROVED	MAK			APPROVED	
	VAR.03 ADDED. ITEM–008 ADDED. (DCA. NO. 38103)				ITEM 005,006&007 ADDED FOR VAR.02 (DCA. NO. 33840)						

INVENTORY NO.

REV.	DATE	ALTERED	MKN	REV.	DATE	ALTERED		REV.	DATE	ALTERED	
09	03.08.12	CHECKED	AKHIL	08	29.5.06	CHECKED		07	23.03.04	CHECKED	
		APPROVED	MAK			APPROVED	RM			APPROVED	
	ITEM 004 ADDED FOR VAR.00 (DCA. NO. 31215)				BP CODE ALLOTTED. (DCA. NO. 25821)				DRAWING REDRAWN. VAR–01 & ITEM–003 ADDED REF. FOR ITEM–002 WAS NOT ON. (DCA.)		

ADDITIONAL INFORMATION

STATUS OF DRAWING

DISTRIBUTION OF PRINTS

O.COPY–––––1
SWM––––––––3
TCX––––––––1

mRikn dk i–dkj ;k
xk–gd@ifj;kstuk dk uke
TYPE OF PRODUCT OR
NAME OF CUSTOMER/PROJECT

12kV / 36kV V.C.B

बीएचईएल BHEL

HAkjr gsoh bysfDV&dYl fyfeVsM
HAksiky
BHARAT HEAVY ELECTRICALS LTD.
BHOPAL

	uke@NAME	gLrk@ SIGN	fnauk@DATE
cuk;k DRN	BDV		22.09.82
tkWpk CKD			
vuqeksfnr APPD	BDV		28.09.82

osfj_ dh la[;k NO. OF VAR: 01

foHAkx DEPT: SWE
dksM CODE: 409
vu_ Vky_ uki dh Js.kh UNTOL_DIMS. GR.
vuqikr SCALE: 1:2
HAkj fd_xk–_ WEIGHT (K.G.)
vis_ M&kbZax dk lanHAZ REF. TO ASSY. DRG.
en d–_ ITEM NO.
en_ la[;k NO. OF ITEM: 008

'kh"kZ TITLE: HAND CRANK

vkjs[A d–_ DRAWING NO.: 35211001509
iqu_@REV: 11

i="B d–_ SHT. No. 01 i="Bksa dh la[;k NO. OF SHT. 03

File No:-HEP-SCR0SWM(Misc)/96/2026-HEP-SWM20900 (Computer No. 301598)

Generated from eOffice by Pradeep Kumar Agrawal , ENGINEER(PKA)-MWX35702-HEP, ENGINEER, HEP-HEAVY ELECTRICALS PLANT (HEP) on 09/05/2026 11:19 am

A3

FIRST ANGLE PROJECTION

(ALL DIMENSIONS ARE IN mm)

DRG. NO. 35211001844

THE INFORMATION ON THIS DOCUMENT IS THE PROPERTY OF BHARAT HEAVY ELECTRICALS LIMITED
IT MUST NOT BE USED DIRECTLY OR INDIRECTLY IN ANY WAY DETRIMENTAL TO THE INTEREST OF THE COMPANY

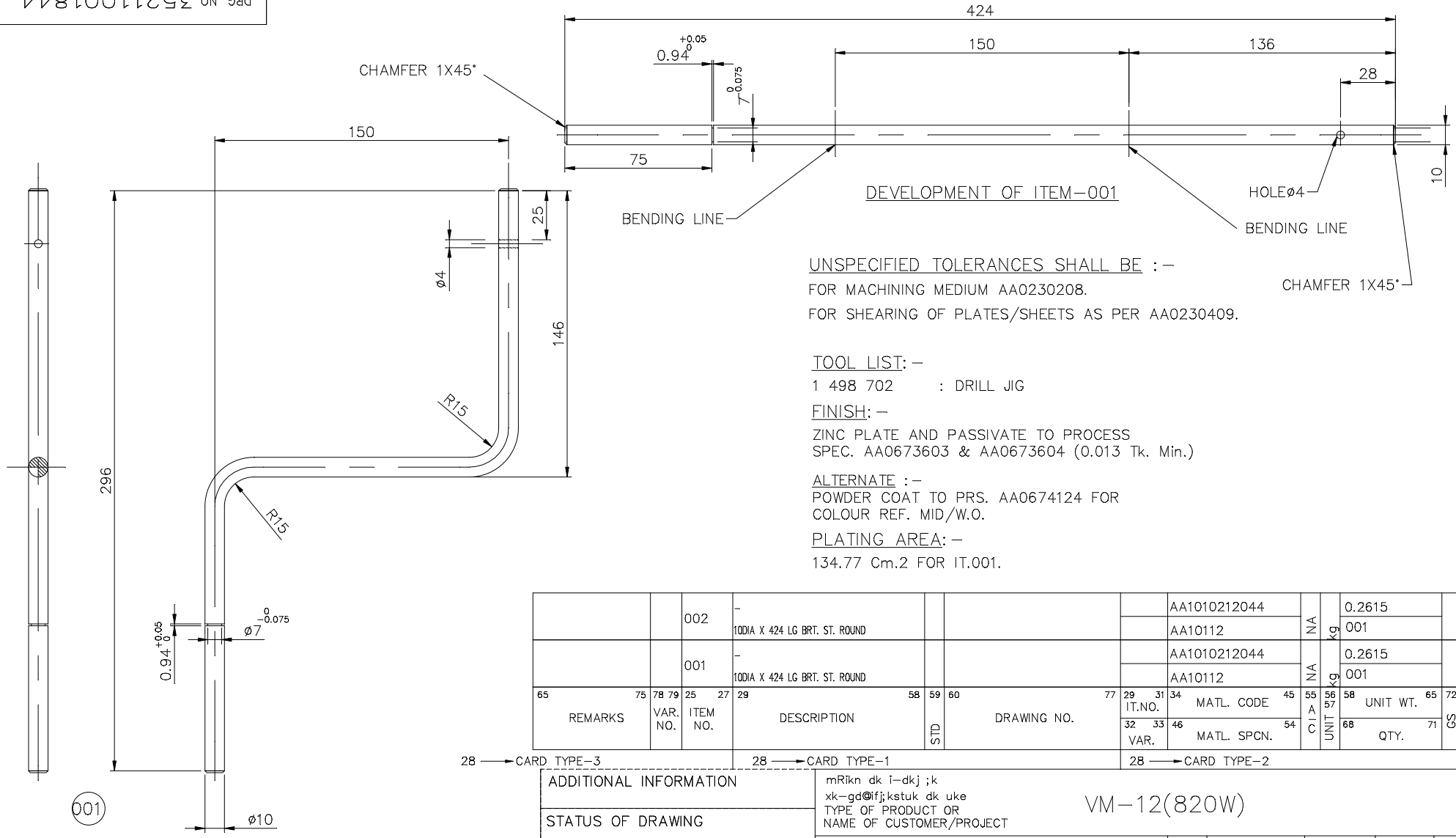

UNSPECIFIED TOLERANCES SHALL BE :-

FOR MACHINING MEDIUM AA0230208.

FOR SHEARING OF PLATES/SHEETS AS PER AA0230409.

TOOL LIST:-

1 498 702 : DRILL JIG

FINISH:-

ZINC PLATE AND PASSIVATE TO PROCESS
SPEC. AA0673603 & AA0673604 (0.013 Tk. Min.)

ALTERNATE :-

POWDER COAT TO PRS. AA0674124 FOR
COLOUR REF. MID/W.O.

PLATING AREA:-

134.77 Cm.2 FOR IT.001.

REMARKS (65-75)	VAR. NO. (78 79)	ITEM NO. (25-27)	DESCRIPTION (29-58)	STD (59)	DRAWING NO. (60-77)	IT.NO. (29-31) / VAR. (32-33)	MATL. CODE (34-45) / MATL. SPCN. (46-54)	C-A (55)	UNIT (56 57)	UNIT WT. (58-65) / QTY. (68-71)	GS (72)	ZONE
		002	- 10DIA X 424 LG BRT. ST. ROUND				AA1010212044 / AA10112	NA	kg	0.2615 / 001		
		001	- 10DIA X 424 LG BRT. ST. ROUND				AA1010212044 / AA10112	NA	kg	0.2615 / 001		

28 → CARD TYPE-3 28 → CARD TYPE-1 28 → CARD TYPE-2

ADDITIONAL INFORMATION

STATUS OF DRAWING

DISTRIBUTION OF PRINTS

O.COPY-----1
SWM--------3
TCX---------1

mRikn dk i-dkj ;k
xk-gd@ifj;kstuk dk uke
TYPE OF PRODUCT OR
NAME OF CUSTOMER/PROJECT

VM-12(820W)

बीएचईएल BHEL

HAkjr gsoh bysfDV&dYl fyfeVsM
HAksiky
BHARAT HEAVY ELECTRICALS LTD.
BHOPAL

	uke@NAME	gLrk@ SIGN	fnauka@ATE
cuk;k DRN	PARE		24/03/2004
tWpk CKD	MANI		24/03/2004
vuqeksfnr APPD			

osfj_ dh la[;k NO. OF VAR: 00

REV.	DATE		
02	31.03.16	ALTERED	SKG
		CHECKED	AKHIL
		APPROVED	MAK

ITEM 002 ADDED

DCA-33843

REV.	DATE		
01	23.08.08	ALTERED	BKT
		CHECKED	RKB
		APPROVED	SK

GROOVE ADDED FOR CIRCLIP

DCA 27898

foHAkx DEPT SWE

dksM CODE 409

vu_ Vky_ uki dh Js.kh UNTOL_DIMS. GR.

vuqikr SCALE 1:2

HAkj fd_xk-_ WEIGHT (K.G.)

vis_ M&kbZqx dk lanHAZ REF. TO ASSY. DRG.

en d-_ ITEM NO.

en_ la[;k NO. OF ITEM 002

'kh"AZ TITLE

HAND CRANK

vkjs[A d-_ DRAWING NO. 35211001844

iqu_@REV 02

i="B d-_ SHT. No. 01 i="Bksa dh la[;k NO. OF SHT. 02

35211001844 -00- 01 REF. DRG. NO.

SIGN. & DATE

INVENTORY NO.

File No:-HEP-SCR0SWM(Misc)/96/2026-HEP-SWM20900 (Computer No. 301598)
Generated from eOffice by Pradeep Kumar Agrawal , ENGINEER(PKA)-MWX35702-HEP, ENGINEER, HEP-HEAVY ELECTRICALS PLANT (HEP) on 09/05/2026 11:19 am

A3

FIRST ANGLE PROJECTION

(ALL DIMENSIONS ARE IN mm)

DRG. NO. 35211001844

THE INFORMATION ON THIS DOCUMENT IS THE PROPERTY OF BHARAT HEAVY ELECTRICALS LIMITED
IT MUST NOT BE USED DIRECTLY OR INDIRECTLY IN ANY WAY DETRIMENTAL TO THE INTEREST OF THE COMPANY

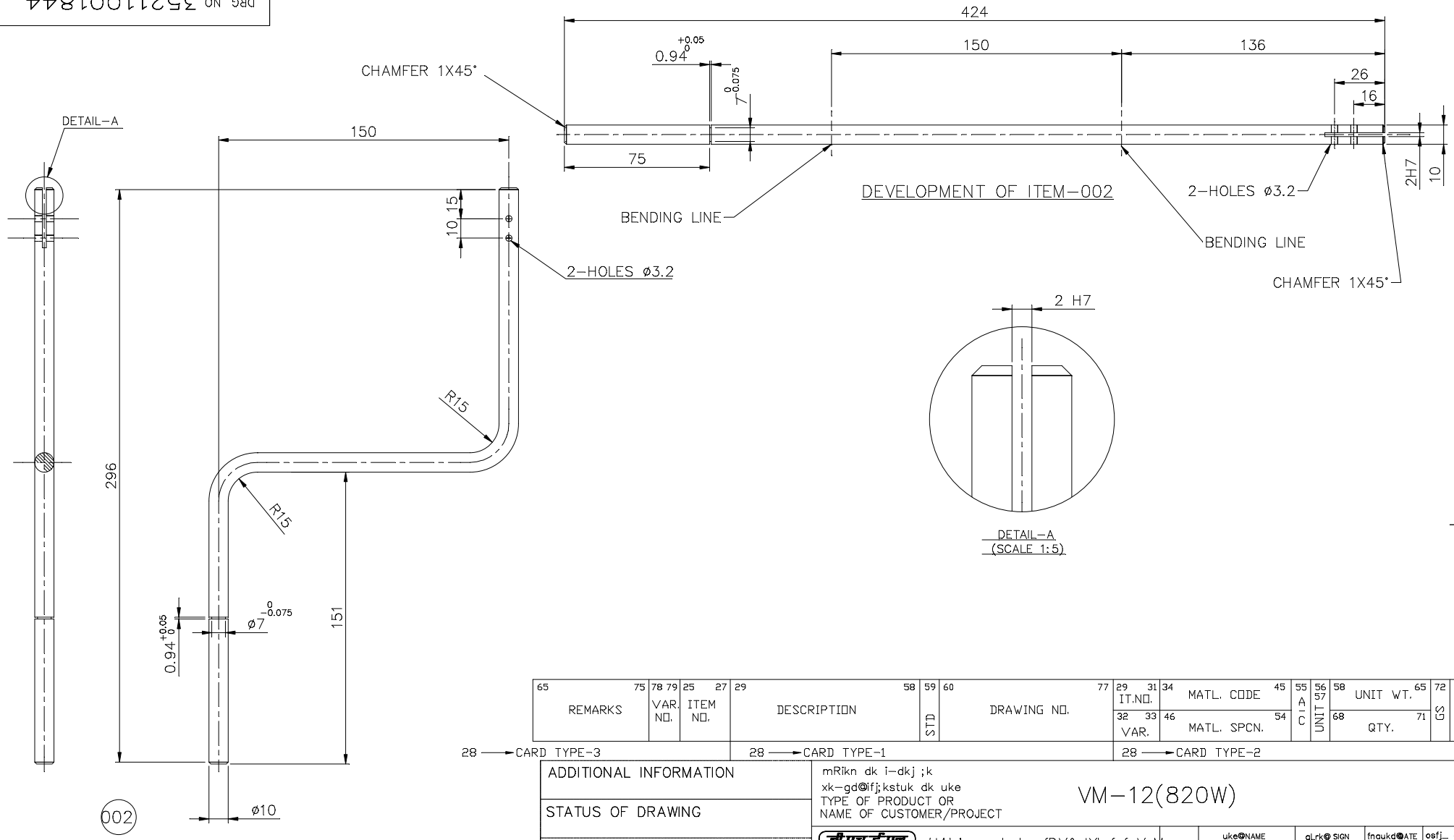

REMARKS	VAR. NO.	ITEM NO.	DESCRIPTION	STD	DRAWING NO.	IT.NO. / VAR.	MATL. CODE / MATL. SPCN.	UNIT	UNIT WT. / QTY.	GS	ZONE
65–75	78 79	25–27	29–58	59	60–77	29–31 / 32–33	34–45 / 46–54	55–57	58–65 / 68–71	72	

28 → CARD TYPE-3 | 28 → CARD TYPE-1 | 28 → CARD TYPE-2

ADDITIONAL INFORMATION

STATUS OF DRAWING

DISTRIBUTION OF PRINTS

O.COPY-----1
SWM--------3
TCX---------1

mRikn dk i-dkj ;k
xk-gd@ifj;kstuk dk uke
TYPE OF PRODUCT OR
NAME OF CUSTOMER/PROJECT

VM-12(820W)

HAkjr gsoh bysfDV&dYl fyfeVsM
HAksiky
BHARAT HEAVY ELECTRICALS LTD.
BHOPAL

	uke@NAME	gLrk@ SIGN	fnauk@DATE
cuk;k DRN	PARE		24/03/2004
tkWpk CKD	MANI		24/03/2004
vuqeksfnr APPD			

osfj_ dh la[;k NO. OF VAR: 00

REV.	DATE	ALTERED	REV.	DATE	ALTERED	REV.	DATE	ALTERED
		CHECKED			CHECKED AKHIL			CHECKED RKB
		APPROVED	02	31.03.16	APPROVED MAK	01	23.08.08	APPROVED SK
				ITEM 002 ADDED			GROOVE ADDED FOR CIRCLIP	
				DCA-33843			DCA 27898	

INVENTORY NO.

SIGN. & DATE

35211001844 -00- 01
REF. DRG. NO.

foHAkx DEPT SWE
dksM CODE 409
vu_ Vky_ uki dh Js.kh UNTOL.DIMS. GR.
vuqikr SCALE 1:2
HAkj fd_xk-_ WEIGHT (K.G.)
vls_ M&kbZqx dk lanHAZ REF. TO ASSY. DRG.
en d-_ ITEM NO.
en_ la[;k NO. OF ITEM 002

'kh"AZ TITLE
HAND CRANK

vkjs[A d-_ DRAWING NO.
35211001844

iqu_@REV 02

i="B d-_ SHT. No. 02
i="Bksa dh la[;k NO. OF SHT. 02

File No:-HEP-SCR0SWM(Misc)/96/2026-HEP-SWM20900 (Computer No. 301598)
Generated from eOffice by Pradeep Kumar Agrawal , ENGINEER(PKA)-MWX35702-HEP, ENGINEER, HEP-HEAVY ELECTRICALS PLANT (HEP) on 09/05/2026 11:19 am

A3

FIRST ANGLE PROJECTION (ALL DIMENSIONS ARE IN mm)

REV.	DATE	ALTERED / CHECKED / APPROVED	REV.	DATE	ALTERED / CHECKED / APPROVED
			01	8.12.04	APPROVED RM

DRG. REDRAWN. ADDED

(DCA NO. 24141)

ADDITIONAL INFORMATION

STATUS OF DRAWING

DISTRIBUTION OF PRINTS: D.C.-1 SWM-3 TCX-1

TOOL LIST

1492774 BURNOUT TEMPLATE
1492775 DRILL JIG

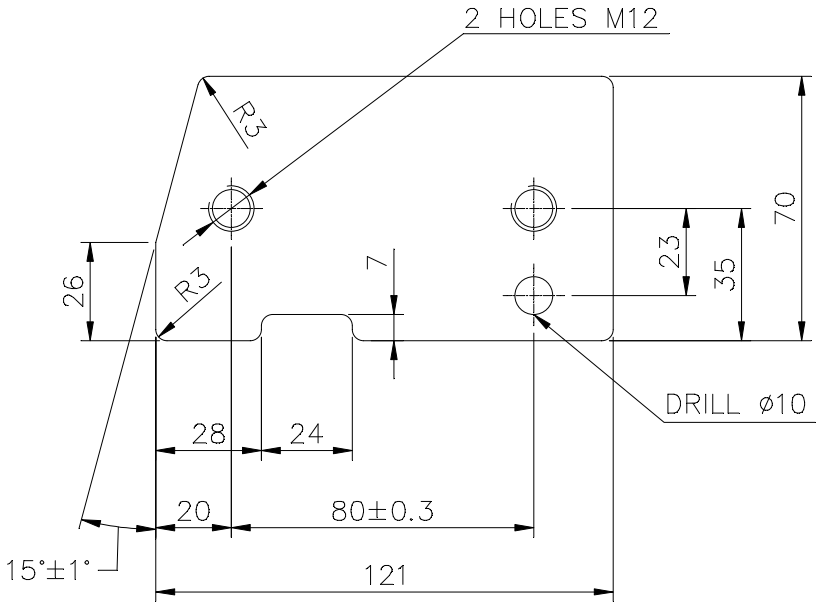

10 TK.

FINISH :-

ZINC PLATE AND PASSIVATE TO PR. SPEC. AA0673603 & AA0673604 (0.05 Tk. MIN.)

REF. DRG. NO.	ITEM NO.	DESCRIPTION	STD	MATL. CODE / MATL. SPCN.	CIA	UNIT	UNIT WT. / QTY.
ST943324	001	10 TK.x70x121 STRUCTURAL STEEL PLATE		AA10118808072 / AA10108			

REMARKS (75) | ITEM NO. (25-27) | DESCRIPTION (29-58) | STD (59) | MATL. CODE (46-54) | CIA (55) | UNIT (56) | UNIT WT. (68-71)

28 → CARD TYPE-3 | 28 → CARD TYPE-1 | 28 → CARD TYPE-2

SIGN. & DATE

HAkjr gsoh bysDV&hdYl fyfeVsM HAksiky
BHARAT HEAVY ELECTRICALS LTD.
BHOPAL

	NAME	SIGN	DATE
cuk;k DRN	BDV	Sd/-	24.8.82
tkapk CKD	MZG	Sd/-	25.8.82
vuqeksfnr APPD	BPN	Sd/-	28.8.82

osfj_ dh la[;k NO. OF VAR. —

INVENTORY NO.

foHAkx DEPT	vu_ Vky_ uki dh Js.kh UNTOL.DIMS. GR.		vuqikr SCALE	HAkj fd_xk-_ WEIGHT (K.G.)	vls_M&kbZax dk lanHAZ REF. TO ASSY. DRG.	en d-_ ITEM NO.	en la[;k NO. OF ITEM
SWE	M		1:2	—	35211001545	023	001
dksM CODE 409	AA0230208						

'Ah"AZ TITLE: PLATE

vkjs[A d-DRAWING NO. 4 521 10 01543

iqu@REV. 01

i="B d-SHT. No. 01 i="Bksa dh la[;k NO. OF SHT. 01

THE INFORMATION ON THIS DOCUMENT IS THE PROPERTY OF BHARAT HEAVY ELECTRICALS LIMITED
IT MUST NOT BE USED DIRECTLY OR INDIRECTLY IN ANY WAY DETRIMENTAL TO THE INTEREST OF THE COMPANY

File No. HEP-SCR0SWM(Misc)/96/2026-HEP-SWM20900 (Computer No. 301598)
Generated from eOffice by Pradeep Kumar Agrawal , ENGINEER(PKA)-MWX35702-HEP, ENGINEER, HEP-HEAVY ELECTRICALS PLANT (HEP) on 09/05/2026 11:19 am

FIRST ANGLE PROJECTION (ALL DIMENSIONS ARE IN mm)

REV.	DATE	ALTERED / CHECKED / APPROVED	REV.	DATE	ALTERED / CHECKED / APPROVED	ADDITIONAL INFORMATION
			02	28.07.05		STATUS OF DRAWING
			DRAWING REDRAWN (DCA. NO. 23583)			DISTRIBUTION OF PRINTS O/C-1,SWM4,TCX-1

TOOL LIST :-
1492636-PIERCING & CROPPING TOOL
~~1492637-BENDING TOOL~~
1492762-BENDING TOOL

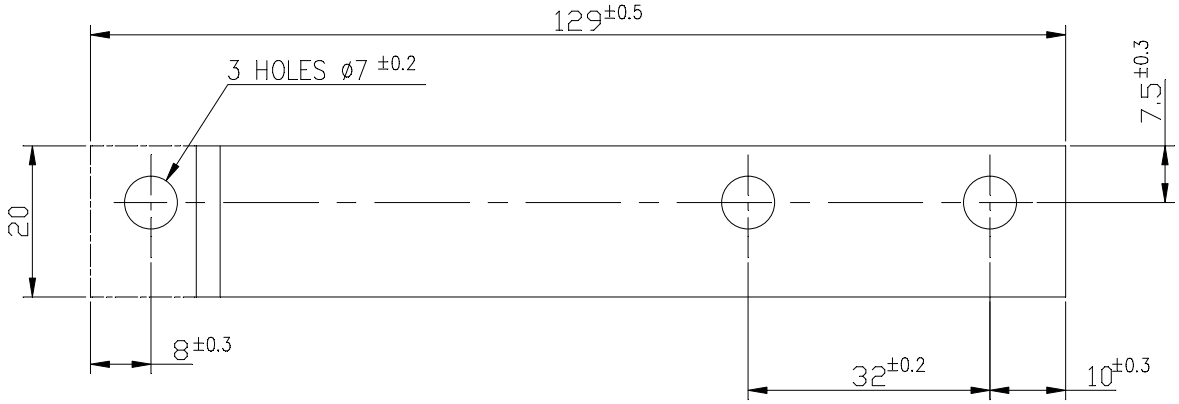

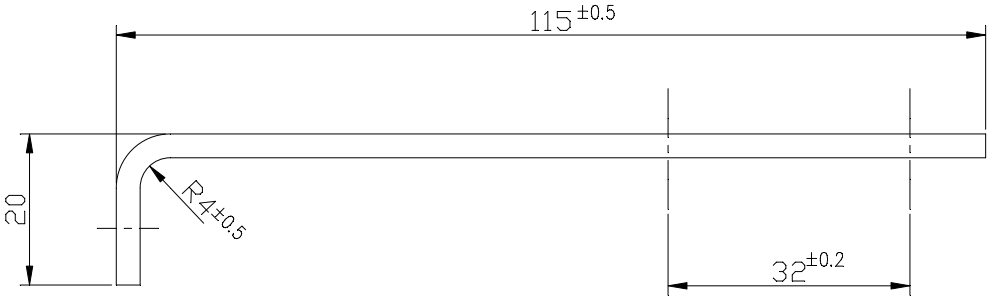

FINISH: - ZINC PLATE AND PASSIVATE TO PR.S.7608 A (0.013 TO 0.015 TK)

REMARKS (65–75)	ITEM NO. (25–27)	DESCRIPTION (29–58)	STD (59)	MATL. CODE (46–54) / MATL. SPCN.	A/C (55)	UNIT Kg (56)	UNIT WT. (68–71) / QTY.
BP9099431457	001	- 3.15TK X 20X129 LG. HRC STEEL		AA1011713136 / AA10113	NA	Kg	0.0638 / 001

28 → CARD TYPE-3 | 28 → CARD TYPE-1 | 28 → CARD TYPE-2

HAkjr gsoh bysDV&hdYl fyfeVsM
HAksiky
BHARAT HEAVY ELECTRICALS LTD.
BHOPAL

	uke NAME	qLrk_ SIGN	fnuakd DATE	osfj_ dh la[;k NO. OF VAR.
cuk;k DRN	B.D.V	Sd/-	16.09.82	
tkapk CKD	M.Z.G	Sd/-	18.09.82	
vuqeksfnr APPD	B.P.N,R.K.G	Sd/-	25.09.82	

foHAkx DEPT	vu_ Vky_ uki dh Js.kh UNTOL.DIMS. GR.		vuqikr SCALE	HAkj fd_xk-_ WEIGHT (K.G.)	vls_M&kbZax dk lanHAZ REF. TO ASSY. DRG.	en d-_ ITEM NO.	en la[;k NO. OF ITEM
SWE							
dksM CODE 409	3-250-00-01404		1:1		35211001556	061	01

'Ah"AZdQ TITLE
BRACKET

vkjs[A d-_ DRAWING NO. 45211001506 | iqu@REV. 02

i="B d-_ SHT. No. 01 | i="Bksa dh la[;k NO. OF SHT. 01

THE INFORMATION ON THIS DOCUMENT IS THE PROPERTY OF BHARAT HEAVY ELECTRICALS LIMITED
IT MUST NOT BE USED DIRECTLY OR INDIRECTLY IN ANY WAY DETRIMENTAL TO THE INTEREST OF THE COMPANY

REF. DRG. NO. 45211001506-02-01
SIGN. & DATE
INVENTORY NO.

File No. HEP-SCR0SWM(Misc)/96/2026-HEP-SWM20900 (Computer No. 301598)
Generated from eOffice by Pradeep Kumar Agrawal , ENGINEER(PKA)-MWX35702-HEP, ENGINEER, HEP-HEAVY ELECTRICALS PLANT (HEP) on 09/05/2026 11:19 am

FIRST ANGLE PROJECTION

(ALL DIMENSIONS ARE IN mm)

DRG. NO. 3 521 20 01553

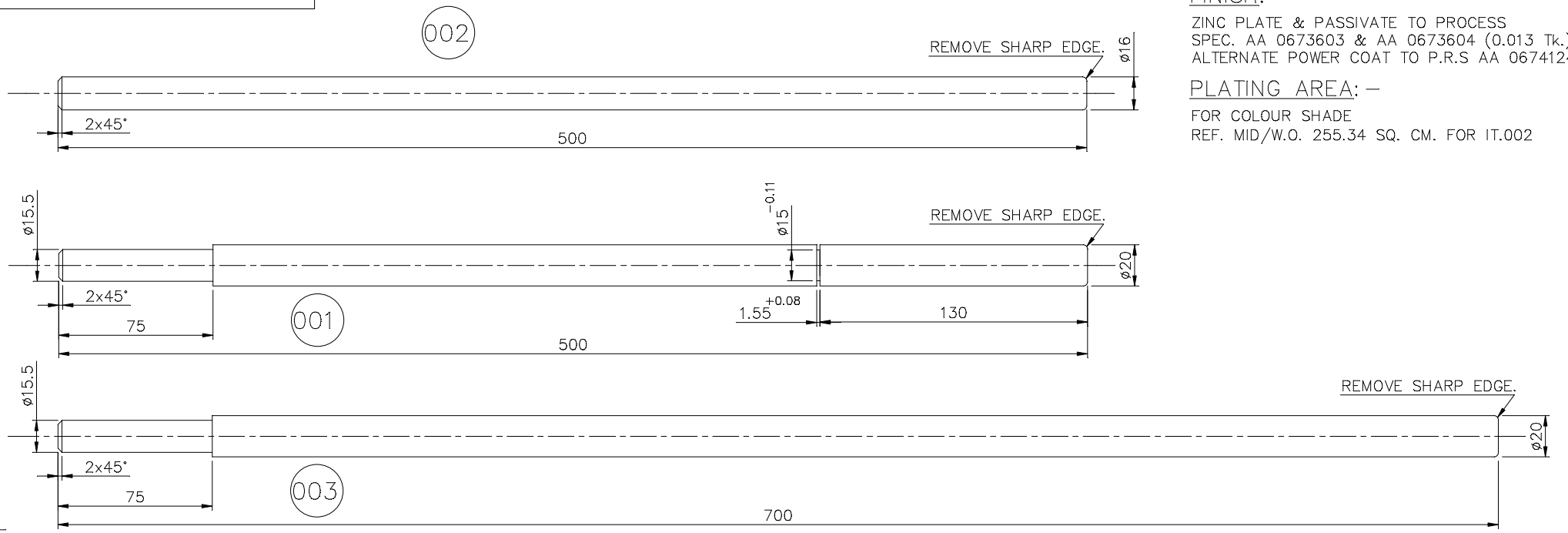

FINISH: –

ZINC PLATE & PASSIVATE TO PROCESS
SPEC. AA 0673603 & AA 0673604 (0.013 Tk.)
ALTERNATE POWER COAT TO P.R.S AA 0674124.

PLATING AREA: –

FOR COLOUR SHADE
REF. MID/W.O. 255.34 SQ. CM. FOR IT.002

VAR00	REMARKS	VAR. NO.	ITEM NO.	DESCRIPTION	STD	DRAWING NO.	IT.NO. / VAR.	MATL. CODE / MATL. SPCN.	A C	UNIT	UNIT WT. / QTY.	GS	ZONE
	BP 9099466080		003	ø20 x 700 Lg. BRIGHT STEEL BAR				AA 1010212095 / AA 10112			1.730 / 001		
	BP 9099461615		002	ø16 x 500 Lg. BRIGHT STEEL BAR				AA 1010212079 / AA 10112			0.800 / 001		
	BP 9099434111		001	ø20 x 500 Lg. BRIGHT STEEL BAR				AA 1010212095 / AA 10112			1.240 / 001		

59–64 VAR00; 65–75 REMARKS; 78 79 VAR. NO.; 25–27 ITEM NO.; 29–58 DESCRIPTION; 59 STD; 60–77 DRAWING NO.; 29–31 IT.NO.; 32 33 VAR.; 34–45 MATL. CODE; 46–54 MATL. SPCN.; 55 A C; 56 57 UNIT; 58–65 UNIT WT.; 68–71 QTY.; 72 GS; ZONE

28 → CARD TYPE–3 28 → CARD TYPE–1 28 → CARD TYPE–2

ADDITIONAL INFORMATION

STATUS OF DRAWING B

DISTRIBUTION OF PRINTS
OC –1
SWGR –3
TCX –1

mRikn dk i–dkj ;k
xk–gd@ifj;kstuk dk uke
TYPE OF PRODUCT OR
NAME OF CUSTOMER/PROJECT

12 Kv V.C.B

बीएचईएल BHEL
HAkjr gsoh bysfDV&dYl fyfeVsM
HAksiky
BHARAT HEAVY ELECTRICALS LTD.
BHOPAL

	uke@NAME	gLrk@SIGN	fnauk@DATE
cuk;k DRN	W.M.A	Sd/–	5.8.03
tWpk CKD	B.P.N	Sd/–	5.8.03
vuqeksfnr APPD	R.K.J	Sd/–	5.8.03

osfj_ dh la[;k NO. OF VAR

REV.	DATE		
10	2.08.08	ALTERED	BKT
		CHECKED	RKB
		APPROVED	SK

DIA15 &GROOVE 1.55 ADDED FOR IT 001 (FOR CIRCLIP)

(DCA.27895)

REV.	DATE		
09	5.9.05	ALTERED	
		CHECKED	
		APPROVED	

DRAWING REDRAWN.

28

(DCA.23895)

foHAks DEPT SWE
dksM CODE 409
vu_ Vky_ uki dh Js.kh UNTOL.DIMS. GR. M AA 0230208
vuqikr SCALE 1:2
HAkj fd_xk–_ WEIGHT (K.G.) –
vis_ M&kbZax dk lanHAZ REF. TO ASSY. DRG. –
en d–_ ITEM NO. – –
en_ la[;k NO. OF ITEM 003

'kh"AZ TITLE SLOW CLOSING AND I.L. HANDLE (V.C.B)

vkjs[A d–DRAWING NO. 3 521 20 01553
iqu_REV 10
i="B d–SHT. No. 01
i="Bksa dh la[;k NO. OF SHT. 01

352120015 53–R09–S01
REF. DRG. NO.

SIGN. & DATE

INVENTORY NO.

THE INFORMATION ON THIS DOCUMENT IS THE PROPERTY OF BHARAT HEAVY ELECTRICALS LIMITED
IT MUST NOT BE USED DIRECTLY OR INDIRECTLY IN ANY WAY DETRIMENTAL TO THE INTEREST OF THE COMPANY

FIRST ANGLE PROJECTION (ALL DIMENSIONS ARE IN mm)

REV.	DATE		REV.	DATE	
02	20.12.04	ALTERED / CHECKED / APPROVED RM	01	26.5.88	ALTERED Sd/– / CHECKED Sd/– / APPROVED Sd/–

ADDITIONAL INFORMATION

STATUS OF DRAWING

DISTRIBUTION OF PRINTS: D.C.-1 SWM-3 TCX-1

DRG. DRDRAWN (DCA. NO. 24151)

4 HOLES MARKED * SHOWN AS PER REV. 02 OF DRAWING 45211001603. (DCA. NO. 06750)

TOOL LIST

1492633 BENDING TOOL FOR 30°

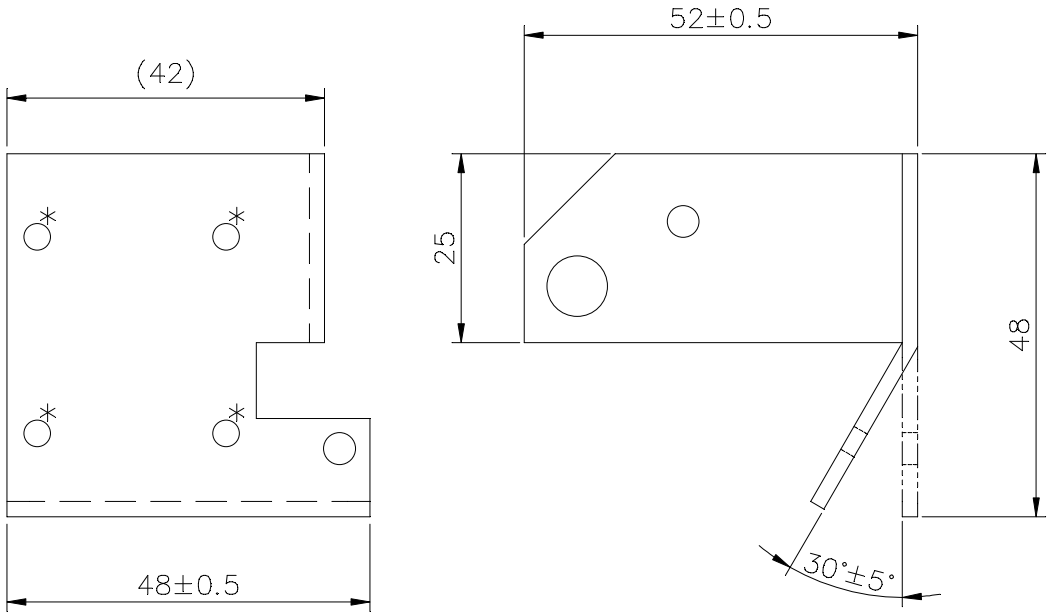

BENDING RADIUS = 2.5±0.5mm

FINISH :–

NATURAL

REF. DRG. NO.	ITEM NO.	DESCRIPTION	STD	MATL. CODE / MATL. SPCN.	CIA	UNIT	UNIT WT. / QTY.
	001	BRACKET		45211001603 / ITEM –001			

REMARKS (75) | ITEM NO. (25–27) | DESCRIPTION (29–58) | STD (59) | MATL. CODE (46–54) | CIA (55) | UNIT (56) | UNIT WT. (68–71)

28 → CARD TYPE-3 | 28 → CARD TYPE-1 | 28 → CARD TYPE-2

SIGN. & DATE

HAkjr gsoh bysDV&hdYl fyfeVsM HAksiky

BHARAT HEAVY ELECTRICALS LTD. BHOPAL

	NAME	SIGN	DATE
cuk;k DRN	TSE	Sd/–	–
tkapk CKD	MZG	Sd/–	28.8.82
vuqeksfnr APPD	RKG	Sd/–	10.9.82

osfj_ dh la[;k NO. OF VAR. –

INVENTORY NO.						
foHAkx DEPT SWE	vu_ Vky_ uki dh Js.kh UNTOL.DIMS. GR. M		vuqikr SCALE 1:1	HAkj fd_xk–_ WEIGHT (K.G.) –	vls_M&kbZax dk lanHAZ REF. TO ASSY. DRG. 35211001503	en d–_ ITEM NO. 001
dksM CODE 409	AA0230208					en la[;k NO. OF ITEM 002

'Ah"AZ TITLE: BRACKET

vkjs[A d–DRAWING NO. 45211001572

iqu@REV. 02

i="B d–SHT. No. 01 i="Bksa dh la[;k NO. OF SHT. 01

THE INFORMATION ON THIS DOCUMENT IS THE PROPERTY OF BHARAT HEAVY ELECTRICALS LIMITED
IT MUST NOT BE USED DIRECTLY OR INDIRECTLY IN ANY WAY DETRIMENTAL TO THE INTEREST OF THE COMPANY

File No. HEP-SCROSWM(Misc)/96/2026-HEP-SWM20900 (Computer No. 301598)
Generated from eOffice by Pradeep Kumar Agrawal , ENGINEER(PKA)-MWX35702-HEP, ENGINEER, HEP-HEAVY ELECTRICALS PLANT (HEP) on 09/05/2026 11:19 am