FIRST ANGLE PROJECTION (ALL DIMENSIONS ARE IN mm)

REV.	DATE		
		ALTERED	
		CHECKED	
		APPROVED	

REV.	DATE		
04	20.03.14	ALTERED	AKN
		CHECKED	BPC
		APPROVED	HRP

IMPORTANT NOTES (CTQ) UPDATED.

(DCA. NO. 32456)

ADDITIONAL INFORMATION

STATUS OF DRAWING

DISTRIBUTION OF PRINTS: O.C–1 | TCX–1 | SWM–3

IMPORTANT NOTES (CTQ)

A) SILVER PLATING ON COMPLETE SURFACE AREA SHALL BE DONE AS PER SG14610. SILVER PLATING THICKNESS SHALL BE MINIMUM 5 MICRON AND AREA SHALL BE 166 SQ. CM. FOR ITEM–001 & 212 SQ. CM. FOR ITEM–002.
B) 5% SAMPLE SHALL BE COMPULSORILY CHECKED FOR PLATING THICKNESS AFTER RECEIPT AT BHOPAL WORKS.
C) ADHESION AND ANTI–TARNISHING SHALL ALSO BE CHECKED.
D) SUPPLIER LOGO & PO NO. TO BE PUNCHED AT LOCATIONS MARKED ###. STICKER IS NOT ACCEPTABLE.

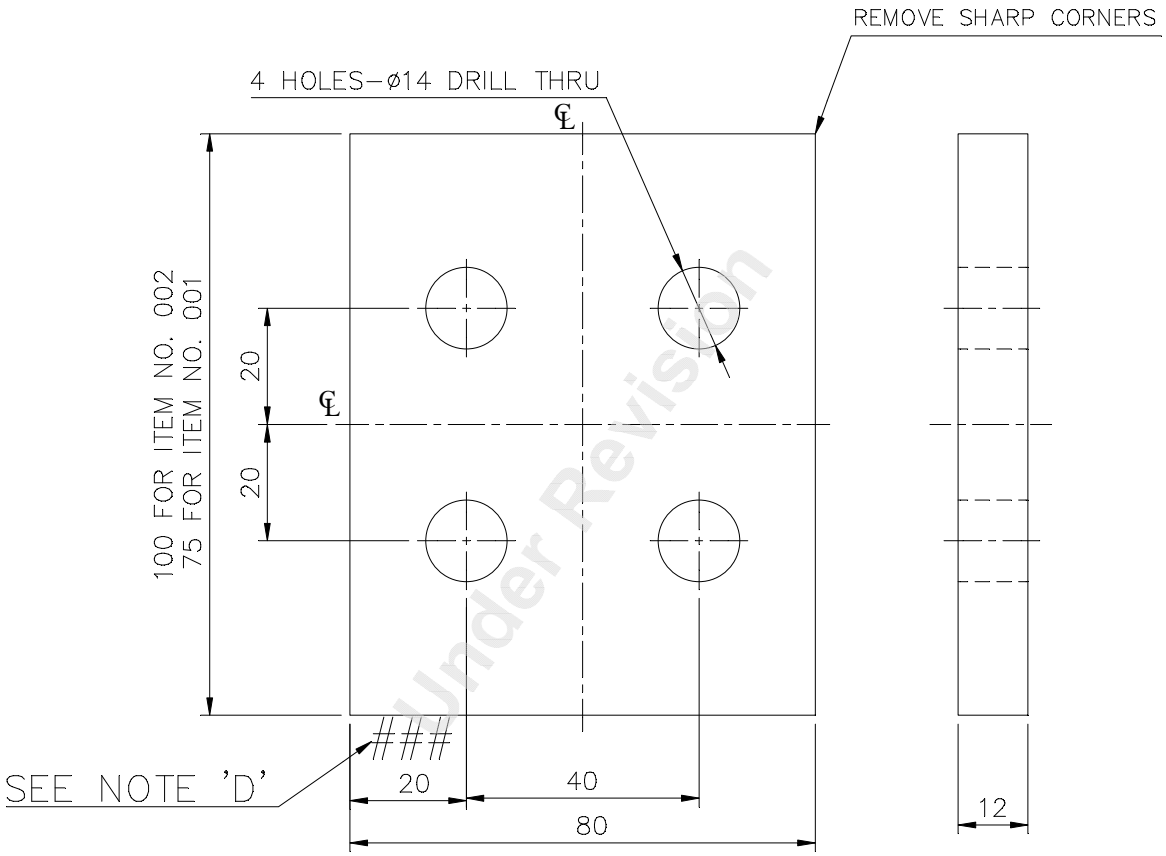

Under Revision

REMARKS (65–75)	ITEM NO. (25–27)	DESCRIPTION (29–58)	STD (59)	MATL. CODE (46–54) / MATL. SPCN.	A/C (55)	UNIT (56)	UNIT WT. (68–71) / QTY.
	002	12 X 100 X 80LG. HD. CPR. ROD		BP1200323076 / AA12023		kg	0.857 / 001
	001	12 X 75 X 80LG CPR. ROD		BP1200323955 / AA12023		kg	0.640 / 001

28 → CARD TYPE–3 | 28 → CARD TYPE–1 | 28 → CARD TYPE–2

BHARAT HEAVY ELECTRICALS LIMITED
BHOPAL

	NAME	SIGN	DATE	NO. OF VAR.
DRN	R.K.S.	sd/–	21.01.86	
CKD	M.Z.G	sd/–	21.01.86	
APPD	R.V.G.	sd/–	21.01.86	–

DEPT.	UNTOL.DIMS. GR.		SCALE	WEIGHT (K.G.)	REF. TO ASSY. DRG.	ITEM NO.	NO. OF ITEM
SWE	–		1:1	–	35211001500–099 35211001560–108 35211001611–099	–	002
CODE. 409							

TITLE: PACKER

DRAWING NO. 45211001700 REV. 04

SHT. No. 01 NO. OF SHT. 01

THE INFORMATION ON THIS DOCUMENT IS THE PROPERTY OF BHARAT HEAVY ELECTRICALS LIMITED
IT MUST NOT BE USED DIRECTLY OR INDIRECTLY IN ANY WAY DETRIMENTAL TO THE INTEREST OF THE COMPANY

REF. DRG. NO. | SIGN. & DATE | INVENTORY NO.

FIRST ANGLE PROJECTION (ALL DIMENSIONS ARE IN mm)

THE INFORMATION ON THIS DOCUMENT IS THE PROPERTY OF BHARAT HEAVY ELECTRICALS LIMITED
IT MUST NOT BE USED DIRECTLY OR INDIRECTLY IN ANY WAY DETRIMENTAL TO THE INTEREST OF THE COMPANY

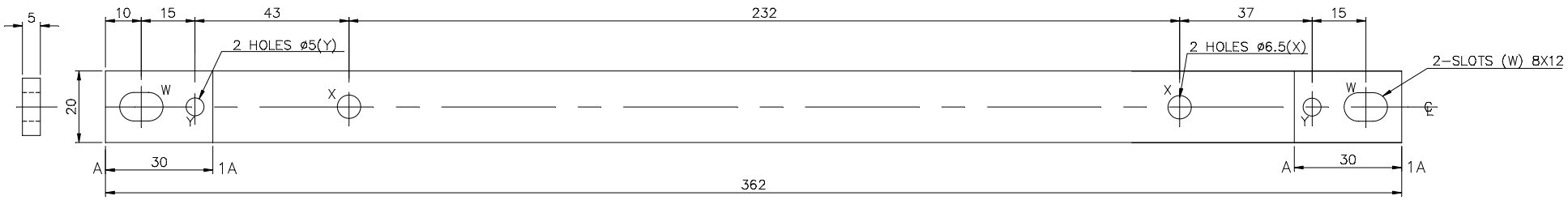

003

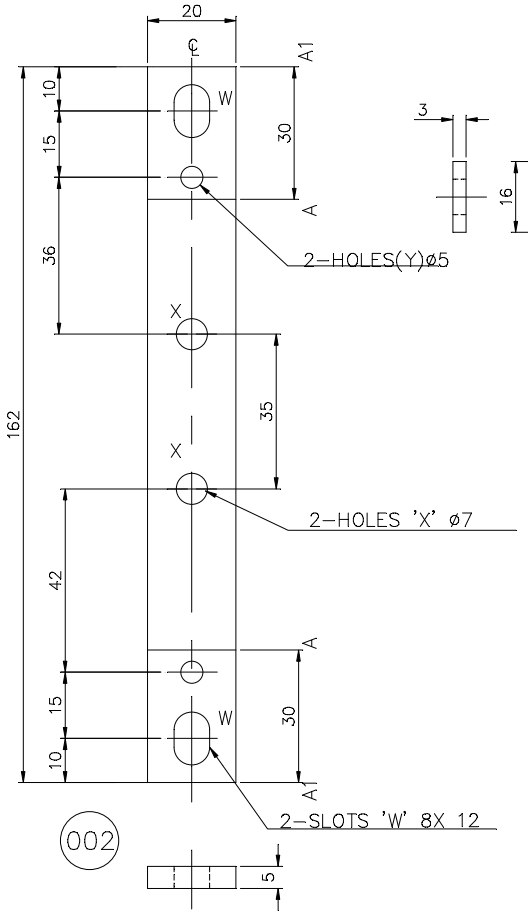

002

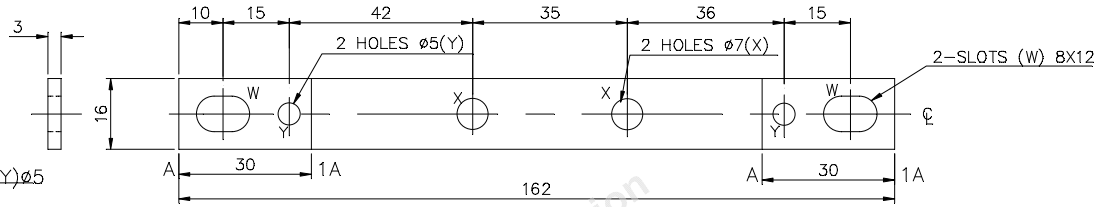

001

UNSPECIFIED TOLERANCES SHALL BE :–
FOR SHEARING OF FLATS AS PER AA0230409
FOR MACHINING MEDIUM AA0230208.

NOTE:–
PUNCH DRG.NO. IT. NO./VAR.NO. AT THIS LOCATION

FINISH:–
TIN PLATING TO SPEC. AA 0673602 FOR ITEM–001
TIN PLATING TO SPEC. SG 15605 FOR ITEM–002
WITHIN DIM. WITH MARK 'A–A1' (5 micron min)

AREA OF PLATING:–
FOR ITEM –001–12.36 Sq cm
FOR ITEM –002–17.00 Sq cm

Under Revision

REMARKS	VAR. NO.	ITEM NO.	DESCRIPTION	STD	DRAWING NO.	IT.NO. / VAR.	MATL. CODE / MATL. SPCN.	A C	UNIT	UNIT WT. / QTY.	GS	ZONE
		003	5TK.x20x362LG. HARD COPPER STRIP			BP1201903831 / AA12003				0.323 / 001		
		002	5TK.x20x162LG. AL. ALLOY FLAT			BP1230329927 / AA12329				0.044 / 001		
		001	3TK.x16x162LG. HARD COPPER STRIP			BP1201903831 / AA12003				0.070 / 001		

28 → CARD TYPE–3 28 → CARD TYPE–1 28 → CARD TYPE–2

ADDITIONAL INFORMATION

STATUS OF DRAWING

DISTRIBUTION OF PRINTS
O.COPY–––––1
SWM––––––––3
TCX––––––––1

mRikn dk i–dkj ;k
xk–gd@ifj;kstuk dk uke
TYPE OF PRODUCT OR
NAME OF CUSTOMER/PROJECT

VM–12(820)

बीएचईएल BHEL
HAkjr gsoh bysfDV&dYl fyfeVsM
HAksiky
BHARAT HEAVY ELECTRICALS LTD.
BHOPAL

	uke@NAME	gLrk@SIGN	fnauk@DATE
cuk;k DRN	PARE	sd/–	15.4.08
tWpk CKD	MANI	sd/–	
vuqeksfnr APPD	MAK	sd/–	

osfj_ dh la[;k NO. OF VAR

REV.	DATE	ALTERED	CHECKED	APPROVED
03	05.01.22	AKHIL	AKHIL	AD
02	21.06.11	S.D.MISHRA	AKHIL	MAK
01	09.09.09	PARE	MANI	MAK

ITEM NO. 001 &002 UPDATDED.
HOLE DISTANCE 35MM WAS 32MM.
D.C.A.NO. 37431

ITEM NO. 003 ADDED.
D.C.A.NO. 30432

DRG REVISED TO UPDATE WT, FINISH & NOTES ADDED (DCA.NO.29171).

foHAkx DEPT SWE
dksM CODE 409
vu_ Vky_ uki dh Js.kh UNTOL_DIMS. GR.
vuqikr SCALE 1:1
HAkj fd_xk–_ WEIGHT (K.G.)
vis_ M&kbZqx dk lanHAZ REF. TO ASSY. DRG. 25216901505
en d–_ ITEM NO. 003
en_ la[;k NO. OF ITEM 003

'kh"AZ TITLE
LINK FOR LT BUSBAR

vkjs[A d–DRAWING NO. 35216901553
iqu_@REV 03

i="B d–SHT. No. 1 i="Bksa dh la[;k NO. OF SHT. 1

INVENTORY NO. SIGN. & DATE REF. DRG. NO. 35216901553 – 1

A3

FIRST ANGLE PROJECTION (ALL DIMENSIONS ARE IN mm)

THE INFORMATION ON THIS DOCUMENT IS THE PROPERTY OF BHARAT HEAVY ELECTRICALS LIMITED
IT MUST NOT BE USED DIRECTLY OR INDIRECTLY IN ANY WAY DETRIMENTAL TO THE INTEREST OF THE COMPANY

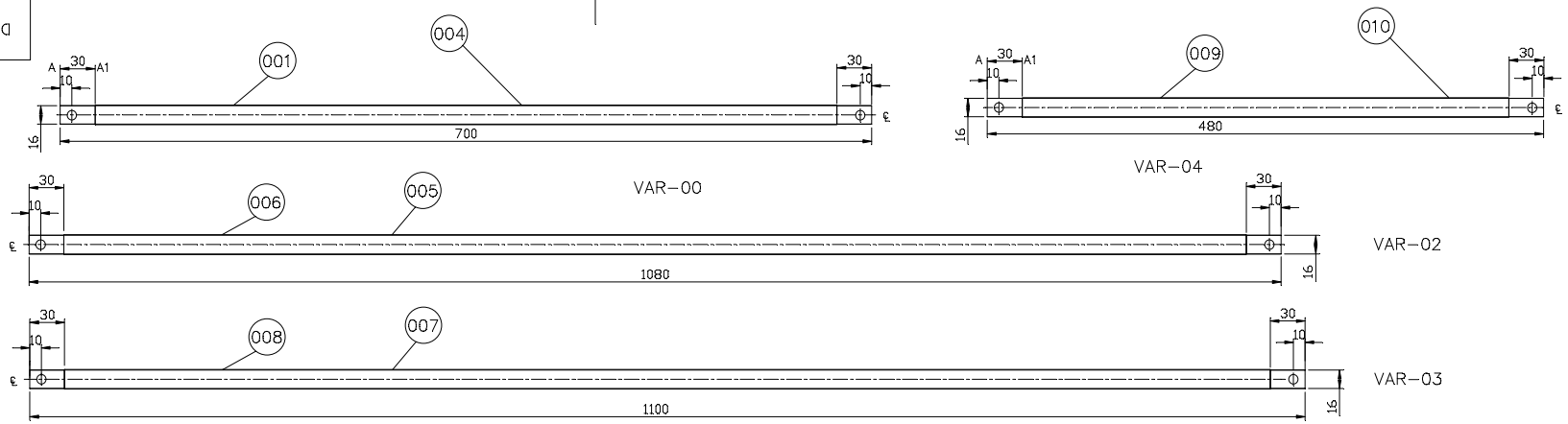

VAR04	VAR03	VAR02	VAR00	REMARKS (65–75)	VAR. NO. (78 79)	ITEM NO. (25–27)	DESCRIPTION (29–58)	STD (59)	DRAWING NO. (60–77)	IT.NO. (29–31) / VAR. (32–33)	MATL. CODE (34–45) / MATL. SPCN. (46–54)	UNIT (55–57)	UNIT WT. (58–65) / QTY. (68–71)	GS (72)	ZONE
001						010	SLEEVE PVC 14 DIAX420 LG.				AA2251021086	NA	Kg 0.025 / 001		
001						009	CONNECTION 16 X 3 X480 CPR.		35216901552	004		NA	Kg 0.473 / 001		
	001					008	SLEEVE PVC 14 DIAX1040 LG.				AA2251021086	NA	Kg 0.025 / 001		
	001					007	CONNECTION 16 X 3 X1100 CPR.		35216901552	003		NA	Kg 0.473 / 001		
		001				006	SLEEVE PVC 14 DIAX1020 LG.				AA2251021086	NA	Kg 0.025 / 001		
		001				005	CONNECTION 16X3X1080 CPR.		35216901552	002		NA	Kg 0.43 / 001		
			001			004	SLEEVE PVC 14 DIAX640 LG.				AA2251021086	NA	Kg 0.028 / 001		
			001			001	CONNECTION 16X3X700 CPR.		35216901552	001		NA	Kg 0.28 / 001		

28 → CARD TYPE-3 28 → CARD TYPE-1 28 → CARD TYPE-2

Under Revision

UNSPECIFIED TOLERANCES SHALL BE :–
FOR SHEARING OF FLATS AS PER AA0230409
FOR MACHINING MEDIUM AA0230208.

NOTE: –
PUNCH DRG.NO. IT. NO./VAR.NO. AT THIS LOCATION

FINISH: –
FOR PLATING REFER SG14610 AND ENGG.SPEC./MID WITHIN DIM. WITH MARK 'A–A1'

AREA OF PLATING: –
FOR ITEM 001–003–12.36 sq.cm.

USAGE
V00 FOR 820W AIS
V02 FOR 1200W AIS
V03 FOR 1220W AIS

35216901518 –05– 01
REF. DRG. NO.

SIGN. & DATE

REV.	DATE	ALTERED	
06	17.08.17	ALTERED	SKG
		CHECKED	AKHIL
		APPROVED	AD
	VAR 04 ADDED (DCA. NO.–35130)		

ADDITIONAL INFORMATION

STATUS OF DRAWING

DISTRIBUTION OF PRINTS
O.COPY–––––1
SWM––––––––3
TCX––––––––1

mRikn dk i–dkj ;k
xk–gd@ifj;kstuk dk uke
TYPE OF PRODUCT OR
NAME OF CUSTOMER/PROJECT

VM 12 (820 AND 1220)

बीएचईएल BHEL
HAkjr gsoh bysfDV&dYl fyfeVsM
HAksiky
BHARAT HEAVY ELECTRICALS LTD.
BHOPAL

	uke@NAME	gLrk@ SIGN	fnauka@DATE	osfj_ dh la[;k NO. OF VAR
cuk;k DRN	B.R.MALVYA		29.10.98	03
tWpk CKD				
vuqeksfnr APPD	R.M.		13.11.98	

INVENTORY NO.

REV.	DATE	ALTERED	
05	29.7.16	ALTERED	rg
		CHECKED	rg
		APPROVED	ad
	VAR 03 ADDED (DCA. NO.)		

REV.	DATE	ALTERED	
04	15.03.12	ALTERED	MKN
		CHECKED	AKHIL
		APPROVED	MAK
	DRG. NO. 35216901552 WAS 35216921552 IN BOM (DCA. NO. 30958)		

REV.	DATE	ALTERED	
03	12.07.08	ALTERED	
		CHECKED	
		APPROVED	
	ITEM–002 DETACHED BOM REARRANGED. REF.DRG FOR CONN. ADDED (DCA–27761)		

foHAkx DEPT SWE
dksM CODE 409
vu_ Vky_ uki dh Js.kh UNTOL.DIMS. GR.
vuqikr SCALE NTS
HAkj fd_xk–_ WEIGHT (K.G.)
vis_ M&kbZax dk lanHAZ REF. TO ASSY. DRG.
en d–_ ITEM NO.
en_ la[;k NO. OF ITEM

'kh"AZ TITLE
LT BUSBAR

vkjs[A d–DRAWING NO.
35216901518
iqu_@REV 06

i="B d–SHT. No. 01 i="Bksa dh la[;k NO. OF SHT. 01

A3

FIRST ANGLE PROJECTION (ALL DIMENSIONS ARE IN mm)

THE INFORMATION ON THIS DOCUMENT IS THE PROPERTY OF BHARAT HEAVY ELECTRICALS LIMITED
IT MUST NOT BE USED DIRECTLY OR INDIRECTLY IN ANY WAY DETRIMENTAL TO THE INTEREST OF THE COMPANY

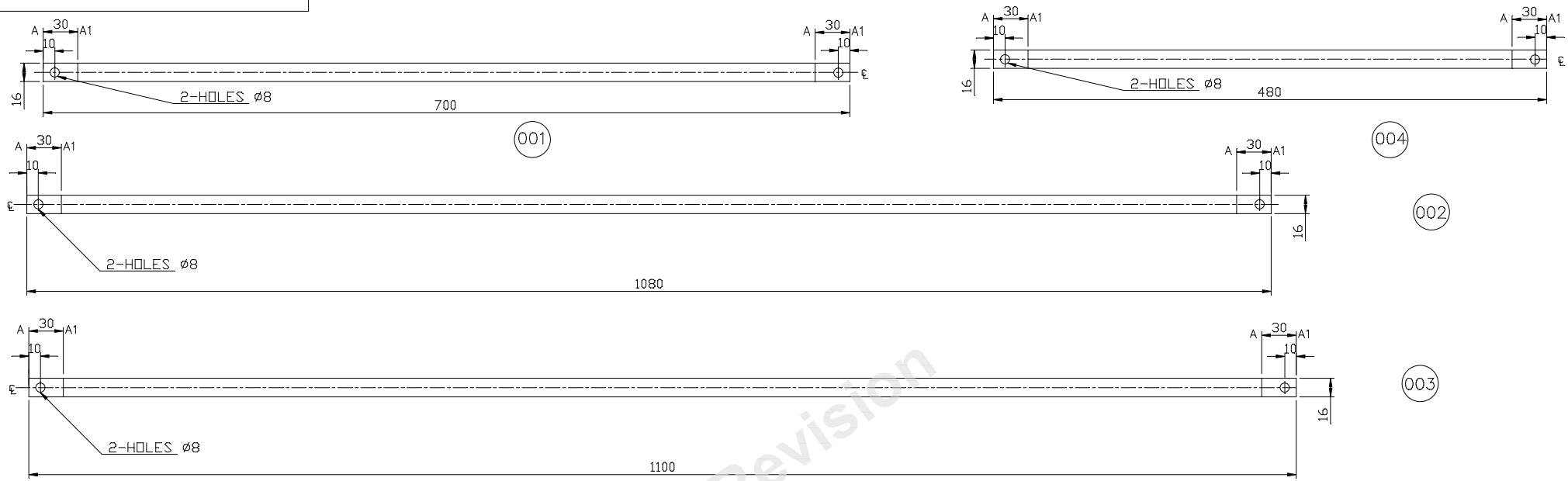

Under Revision

REMARKS	VAR. NO.	ITEM NO.	DESCRIPTION	STD	DRAWING NO.	IT.NO. / VAR.	MATL. CODE / MATL. SPCN.	UNIT	UNIT WT. / QTY.	GS	ZONE
		004	HARD CPR.STRIP 16 X 3 THK. X 480 LG.			BP1201903831 / BP12003	NA /	Kg	0.324 / 001		
		003	HARD CPR.STRIP 16 X 3 THK. X 1100 LG.			BP1201903831 / BP12003	NA /	Kg	0.473 / 001		
		002	HARD CPR.STRIP 16 X 3 THK. X 1080LG.			BP1201903831 / BP12003	NA /	Kg	0.46 / 001		
		001	HARD CPR.STRIP 16 X 3 TK. X 700 LG.			BP1201903831 / BP12003	NA /	Kg	0.300 / 001		

28 → CARD TYPE-3 28 → CARD TYPE-1 28 → CARD TYPE-2

UNSPECIFIED TOLERANCES SHALL BE :–
FOR SHEARING OF FLATS AS PER AA0230409
FOR MACHINING MEDIUM AA0230208.

NOTE: –
PUNCH DRG.NO. IT. NO./VAR.NO. AT THIS LOCATION

FINISH: –
TIN PLATING TO SPEC. AA 0673602
WITHIN DIM. WITH MARK 'A–A1' (5 micron min)

AREA OF PLATING: –
FOR ITEM 001&002–12.36 sq.cm.

ADDITIONAL INFORMATION

STATUS OF DRAWING

DISTRIBUTION OF PRINTS
O.COPY–––––1
SWM––––––––3
TCX––––––––1

mRikn dk i–dkj ;k
xk–gd@ifj;kstuk dk uke
TYPE OF PRODUCT OR
NAME OF CUSTOMER/PROJECT

VM 12 (820 AND 1220)

HAkjr gsoh bysfDV&dYl fyfeVsM
HAksiky
BHARAT HEAVY ELECTRICALS LTD.
BHOPAL

	uke@NAME	gLrk@SIGN	fnauka@DATE
DRN	PARE	sd/–	15-4-09
tWpk CKD	MANI	sd/–	
vuqekfnr APPD	MAK	sd/–	

osfj_ dh la[;k NO. OF VAR

foHAkx DEPT SWE
dksM CODE 409
vu_ Vky_ uki dh Js.kh UNTOL.DIMS. GR.
vuqikr SCALE NTS
HAkj fd_xk–_ WEIGHT (K.G.)
vis_ M&kbZax dk lanHAZ REF. TO ASSY. DRG.
en d–_ ITEM NO.
en_ la[;k NO. OF ITEM

'kh"AZ TITLE
LT BUSBAR
(COPPER 16 X 3 TK)

vkjs[A d–DRAWING NO.
35216901552
iqu_@REV 03
i="B d–SHT. No. 01
i="Bksa dh la[;k NO. OF SHT. 01

REV.	DATE	ALTERED	CHECKED	APPROVED
03	29.7.16	sg	akhil	ad
02	29.7.16	sg	rg	ad
01	09.09.09	PARE	MANI	MAK

INVENTORY NO.
ITEM 004 ADDED (DCA.NO.35131)
ITEM 003 ADDED (DCA.NO.34078)
DRG REVISED TO UPDATE WT & FINISH. (DCA.NO.29170)

SIGN. & DATE
REF. DRG. NO. 35216901552 –02– 01

A3

FIRST ANGLE PROJECTION (ALL DIMENSIONS ARE IN mm)

REV.	DATE			REV.	DATE		
09	26.08.23	ALTERED	AKN	08	12.09.18	ALTERED	AR
		CHECKED	AKHIL			CHECKED	AD
		APPROVED	AD			APPROVED	AD

4-HOLES ø7.5 & C'SK DELETED. (DCA NO. 38413)

NOTE-'D' MODIFIED. (DCA NO. 35645)

ADDITIONAL INFORMATION

STATUS OF DRAWING: B

DISTRIBUTION OF PRINTS: O/C-1 SWM-3 TCX-1

UNSPECIFIED TOLERANCES SHALL BE:-
FOR SHEARING OF PLATES AS PE AA 0230409

IMPORTANT NOTES (CTQ)

A) SILVER PLATING ON AREA ALONG LENGTH MARKED "AA1 & BB1" SHALL BE DONE AS PER SG14610. SILVER PLATING THICKNESS SHALL BE MINIMUM 13 MICRON FOR AREA "AA1" & 5 MICRON FOR AREA "BB1" AND PLATING AREA SHALL BE 476.03 SQ. CM. FOR ITEM-001 & 492.63 SQ. CM. FOR ITEM-002.
B) 5% SAMPLE SHALL BE COMPULSORILY CHECKED FOR PLATING THICKNESS AFTER RECEIPT AT BHOPAL WORKS.
C) ADHESION AND ANTI-TARNISHING SHALL ALSO BE CHECKED.
D) SUPPLIER NAME, LOGO, PO. NO., SERIAL NO., SUPPLY DATE & BATCH NO. TO BE PUNCHED/LASER PRINT AT LOCATIONS MARKED ###. STICKER IS NOT ACCEPTABLE.

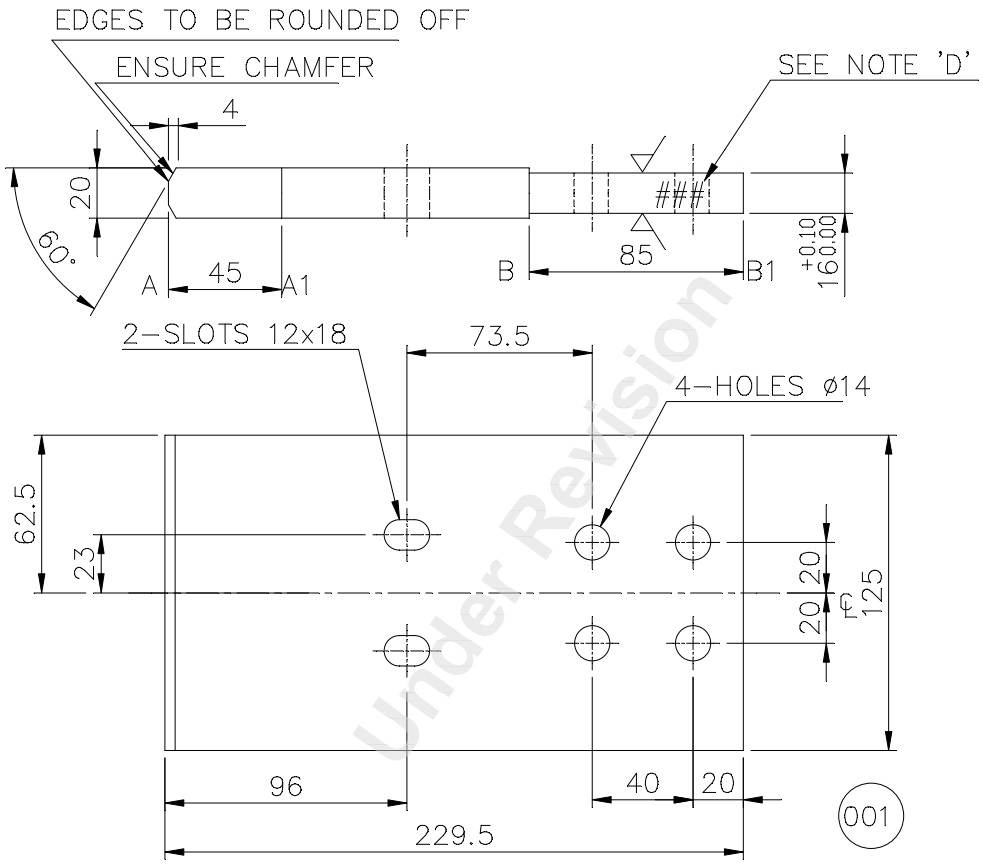

Under Revision

REF. DRG. NO.	ITEM NO.	DESCRIPTION	STD	MATL. CODE / MATL. SPCN.	CIC	UNIT	UNIT WT. / QTY.
BP9099127499	002	20X130X229.5 LG. COPPER FLAT		AA12023			5.31 / 001
BP9049111394	001	20X125X229.5 LG. COPPER FLAT		AA12023			5.11 / 001

REMARKS (65–75) | ITEM NO. (25–27) | DESCRIPTION (29–58) | STD (59) | MATL. CODE (46–54) | CIC (55) | UNIT (56) | UNIT WT. (68–71)

28 → CARD TYPE-3 | 28 → CARD TYPE-1 | 28 → CARD TYPE-2

HAkjr gsoh bysDV&hdYl fyfeVsM HAksiky
BHARAT HEAVY ELECTRICALS LTD.
BHOPAL

SIGN. & DATE	NAME	SIGN	DATE	osfj_ dh la[;k NO. OF VAR.
cuk;k DRN	P.PARE	s/d	09.07.03	
tkapk CKD	K.S.M.	s/d	09.07.03	
vuqeksfnr APPD	H.R.P.	s/d	09.07.03	—

INVENTORY NO.						
foHAkx DEPT SWE	vu_ Vky_ uki dh Js.kh UNTOL.DIMS. GR. M		vuqikr SCALE 1:1	HAkj fd_xk-_ WEIGHT (K.G.)	vls_M&kbZax dk lanHAZ REF. TO ASSY. DRG. —	en d-_ ITEM NO. —
dksM CODE 409	AA 0230208					en la[;k NO. OF ITEM 002

'Ah"AZ TITLE: FIXED CONTACT

vkjs[A d-DRAWING NO. 45211001764 — iqu@REV. 09

i="B d-SHT. No. 01 — i="Bksa dh la[;k NO. OF SHT. 02

THE INFORMATION ON THIS DOCUMENT IS THE PROPERTY OF BHARAT HEAVY ELECTRICALS LIMITED
IT MUST NOT BE USED DIRECTLY OR INDIRECTLY IN ANY WAY DETRIMENTAL TO THE INTEREST OF THE COMPANY

FIRST ANGLE PROJECTION (ALL DIMENSIONS ARE IN mm)

REV.	DATE			REV.	DATE		
09	26.08.23	ALTERED	AKN	08	12.09.18	ALTERED	AR
		CHECKED	AKHIL			CHECKED	AD
		APPROVED	AD			APPROVED	AD
4-HOLES Ø7.5 & C'SK DELETED. (DCA NO. 38413)				NOTE-'D' MODIFIED. (DCA NO. 35645)			

ADDITIONAL INFORMATION

STATUS OF DRAWING: B

DISTRIBUTION OF PRINTS: O/C-1 SWM-3 TCX-1

THE INFORMATION ON THIS DOCUMENT IS THE PROPERTY OF BHARAT HEAVY ELECTRICALS LIMITED
IT MUST NOT BE USED DIRECTLY OR INDIRECTLY IN ANY WAY DETRIMENTAL TO THE INTEREST OF THE COMPANY

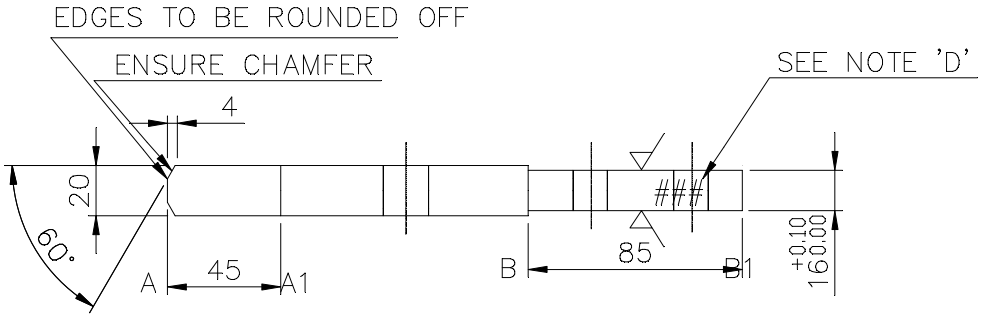

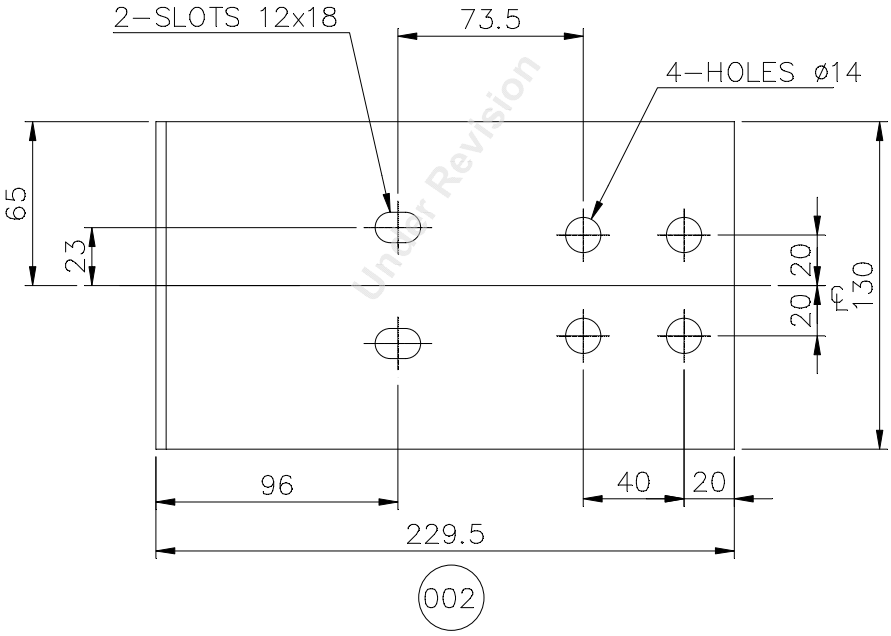

Under Revision

REF. DRG. NO. —

REMARKS (65–75)	ITEM NO. (25–27)	DESCRIPTION (29–58)	STD (59)	MATL. CODE (46–54) / MATL. SPCN.	CIC (55)	UNIT (56)	UNIT WT. (68–71) / QTY.
28 → CARD TYPE-3		28 → CARD TYPE-1		28 → CARD TYPE-2			

SIGN. & DATE

HAkjr gsoh bysDV&hdYl fyfeVsM
HAksiky
BHARAT HEAVY ELECTRICALS LTD.
BHOPAL

	uke NAME	qLrk_ SIGN	fnuqkd DATE	osfj_ dh la[;k NO. OF VAR.
cuk;k DRN	P.PARE	s/d	09.07.03	
tkapk CKD	K.S.M.	s/d	09.07.03	
vuqeksfnr APPD	H.R.P.	s/d	09.07.03	—

INVENTORY NO.

foHAkx DEPT	vu_ Vky_ uki dh Js.kh UNTOL.DIMS. GR.		vuqikr SCALE	HAkj fd_xk-_ WEIGHT (K.G.)	vls_M&kbZax dk lanHAZ REF. TO ASSY. DRG.	en d-_ ITEM NO.	en la[;k NO. OF ITEM
SWE	M		1:1		—	—	002
dksM CODE 409	AA 0230208						

'Ah"AZ TITLE: FIXED CONTACT

vkjs[A d-DRAWING NO. 45211001764

iqu@REV. 09

i="B d-SHT. No. 02 i="Bksa dh la[;k NO. OF SHT. 02

THE INFORMATION ON THIS DOCUMENT IS THE PROPERTY OF BHARAT HEAVY ELECTRICALS LIMITED
IT MUST NOT BE USED DIRECTLY OR INDIRECTLY IN ANY WAY DETRIMENTAL TO THE INTEREST OF THE COMPANY

VAR03	VAR02	VAR01	VAR00	REMARKS	VAR. NO.	ITEM NO.	DESCRIPTION	STD	DRAWING NO.	IT.NO. / VAR.	MATL. CODE / MATL. SPCN.	A C	UNIT	UNIT WT. / QTY.	GS	ZONE
018	016	016	016			014	NUT HEX A M8-8.8				AA7151115024	NA	Kg	0.005 / 001		
018	018	018	018			013	WASHER SPRING LOCK SC B8-ST				AA7164002053	NA	Kg	0.002 / 001		
018	018	018	018			012	WASHER MCD 8.4-ST				AA7161001056	NA	Kg	0.002 / 001		
018	018	018	018			011	SCRU HEX A M8X25-8.8				AA7121123126	NA	Kg	0.014 / 001		
–	004	004	004			010	WASHER SPRING LOCK SC B6-ST				AA7164002045	NA	Kg	0.001 / 001		
–	004	004	004			009	WASHER MCD 6.4-ST				AA7161001048	NA	Kg	0.001 / 001		
–	004	004	004			008	SCRU HEX SLT A M6X25-8.8				BP7121125951	NA	Kg	0.007 / 001		
–	–	–	001			007	EARTH BAR		35215001787	004		NA	Kg	0.430 / 001		
–	–	–	001			006	EARTH BAR		35215001787	005		NA	Kg	1.175 / 001		
–	–	–	002			005	EARTH CONNECTION		35215001789	005		NA	Kg	0.422 / 001		
–	–	–	001			004	EARTH CONNECTION		35215001789	006		NA	Kg	0.342 / 001		
–	002	002	002			003	EARTH CONTACT FOR BV3 OR 4 UNI		D9277173	001	BP9049024750	NA	Kg	0.1058 / 001		
–	–	–	001			002	EARTH BAREARTH BAR		35215001661	002		NA	N.A.	1.146 / 001		
–	–	–	001			001	EARTH BAREARTH BAR		35215001661	001		NA	Kg	1.146 / 001		

Column positions: 65–75 REMARKS; 78 79 VAR. NO.; 25–27 ITEM NO.; 29–58 DESCRIPTION; 59 STD; 60–77 DRAWING NO.; 29–31 IT.NO.; 32–33 VAR.; 34–45 MATL. CODE; 46–54 MATL. SPCN.; 55 A C; 56 57 UNIT; 58–65 UNIT WT.; 68–71 QTY.; 72 GS; ZONE

28 ——►CARD TYPE-3 28 ——►CARD TYPE-1 28 ——►CARD TYPE-2

Under Revision

VAR. 00 – EARTHING ARRGT. FOR BREAKER CHAMBER 5x40 CU.LG. GES. NO. 409570058 (5.075 KG.)

VAR. 01 – EARTHING ARRGT. FOR BREAKER CHAMBER 6x50 CU. LG. GES. NO. 409570059 (7.678 KG.)

VAR. 02 – EARTHING ARRGT. FOR BREAKER CHAMBER 6x50 CU. LG. GES. NO. 409511054 (8.302 kg.)

VAR. 03 – EARTHING ARRGT. FOR BBCT PANEL GES. NO. 409301270 (3.059 kg.)

FOR ARRGT. REF DRG. NO. 25215001686

ADDITIONAL INFORMATION

STATUS OF DRAWING

DISTRIBUTION OF PRINTS

O.COPY-----1
SWM--------3
TCX--------1

mRikn dk i-dkj ;k xk-gd@ifj;kstuk dk uke
TYPE OF PRODUCT OR NAME OF CUSTOMER/PROJECT: VM-12

HAkjr gsoh bysfDV&dYl fyfeVsM HAksiky
BHARAT HEAVY ELECTRICALS LTD. BHOPAL

	uke@NAME	gLrk@SIGN	fnaukd@DATE
cuk;k DRN	SUS		24.07.07
tWpk CKD	SSA		24.07.07
vuqeksfnr APPD	MAK		24.07.07

osfj_ dh la[;k NO. OF VAR: 04

REV.	DATE			REV.	DATE			REV.	DATE		
03	26.03.23	ALTERED / CHECKED / APPROVED	SKG / AKHIL / AD	02	20.06.11	ALTERED / CHECKED / APPROVED	S.D.MISHRA / AKHIL / MAK	001	29.12.10	ALTERED / CHECKED / APPROVED	P.PARE / AKHIL / MAK
	VAR03 ADDED. DCA NO. 38080				ITEM NO. 021 & VAR. 02 ADDED. DCA NO. 34029				WT. ADDED (30133)		

foHkx DEPT: SWE
dksM CODE: 409
vu_ Vky_ uki dh Js.kh UNTOL.DIMS. GR.: M AA0230208
vuqikr SCALE: 1:1
HAkj fd_xk-_ WEIGHT (K.G.)
vls_ M&kbZax dk lanHAZ REF. TO ASSY. DRG.
en d-_ ITEM NO.
en_ la[;k NO. OF ITEM: 020

'kh"AZd TITLE: BOM FOR EARTHING ARRANGEMENT

vkjs[A d-_ DRAWING NO.: 35215002008
iqu_@REV: 03

i="B d-_ SHT. No. 01
i="Bksa dh la[;k NO. OF SHT. 02

REF. DRG. NO. 35215002008-00-01

SIGN. & DATE

INVENTORY NO.

DRG. NO. 35215002008

7451/2024/HEP-SWM20900

THE INFORMATION ON THIS DOCUMENT IS THE PROPERTY OF BHARAT HEAVY ELECTRICALS LIMITED
IT MUST NOT BE USED DIRECTLY OR INDIRECTLY IN ANY WAY DETRIMENTAL TO THE INTEREST OF THE COMPANY

DRG. NO. 35215002008-00-02

VAR03	VAR02	VAR01	VAR00	REMARKS (65–75)	VAR. NO. (78 79)	ITEM NO. (25–27)	DESCRIPTION (29–58)	STD (59)	DRAWING NO. (60–77)	IT.NO. (29–31) / VAR. (32–33)	MATL. CODE (34–45) / MATL. SPCN. (46–54)	UNIT (55)	UNIT (56 57)	UNIT WT. (58–65) / QTY. (68–71)	GS (72)	ZONE
–	001	–	–			021	EARTH BAR		35215001878	003		NA	Kg	1.762		
001	001	001	–			020	EARTH BAR		35215001878	001		NA	Kg	1.762 / 001		
001	–	001	–			019	EARTH BAR		35215001878	002		NA	Kg	0.646 / 001		
–	002	002	–			018	EARTH CONNECTION		35215001879	001		NA	Kg	0.646 / 001		
001	001	001	–			017	EARTH CONNECTION		35215001879	002		NA	Kg	0.507 / 001		
–	001	001	–			016	EARTH BAR		35215001788	004		NA	Kg	1.695 / 001		
–	001	001	–			015	EARTH BAR		35215001788	003		NA	Kg	1.695 / 001		

28 → CARD TYPE-3 28 → CARD TYPE-1 28 → CARD TYPE-2

Under Revision

ADDITIONAL INFORMATION

STATUS OF DRAWING

DISTRIBUTION OF PRINTS

O.COPY-----1
SWM--------3
TCX--------1

mRikn dk i-dkj ;k
xk-gd@ifj;kstuk dk uke
TYPE OF PRODUCT OR
NAME OF CUSTOMER/PROJECT

VM-12

HAkjr gsoh bysfDV&dYl fyfeVsM
HAksiky
BHARAT HEAVY ELECTRICALS LTD.
BHOPAL

	uke@NAME	gLrk@ SIGN	fnauka@ATE
cuk;k DRN	SUS		24.07.07
tWpk CKD	SSA		24.07.07
vuqekfnr APPD	MAK		24.07.07

osfj_ dh la[;k NO. OF VAR: 04

SIGN. & DATE	REV.	DATE	ALTERED	CHECKED	APPROVED	REV.	DATE	ALTERED	CHECKED	APPROVED	REV.	DATE	ALTERED	CHECKED	APPROVED
	03	26.03.23	SKG	AKHIL	AD	02	20.06.11	S.D.MISHRA	AKHIL	MAK	001	29.12.10	P.PARE	AKHIL	MAK
INVENTORY NO.			VAR03 ADDED DCA NO. 38080					ITEM NO. 021 & VAR.02 ADDED DCA NO. 30429					WT. ADDED (30133)		

foHAkx DEPT: SWE
dksM CODE: 409
vu_ Vky_ uki dh Js.kh UNTOL.DIMS. GR.: M
AA0230208
vuqikr SCALE: 1:1
HAkj fd_xk-_ WEIGHT (K.G.)
vis_ M&kbZax dk lanHAZ REF. TO ASSY. DRG.
en d-_ ITEM NO.
en_ la[;k NO. OF ITEM: 020

'kh"AZ TITLE: BOM FOR EARTHING ARRANGEMENT
vkjs[A d-_ DRAWING NO.: 35215002008
iqu_@REV: 03
i="B d-_ SHT. No. 02
i="Bksa dh la[;k NO. OF SHT. 02

35215002008-00-02
REF. DRG. NO.

7451/2024/HEP-SWM20900

DRG. NO. D9277173

THE INFORMATION ON THIS DOCUMENT IS THE PROPERTY OF BHARAT HEAVY ELECTRICALS LIMITED
IT MUST NOT BE USED DIRECTLY OR INDIRECTLY IN ANY WAY DETRIMENTAL TO THE INTEREST OF THE COMPANY

FINISH:– TIN PLATING TO AA 0673602 (0.013 TK.MIN.)

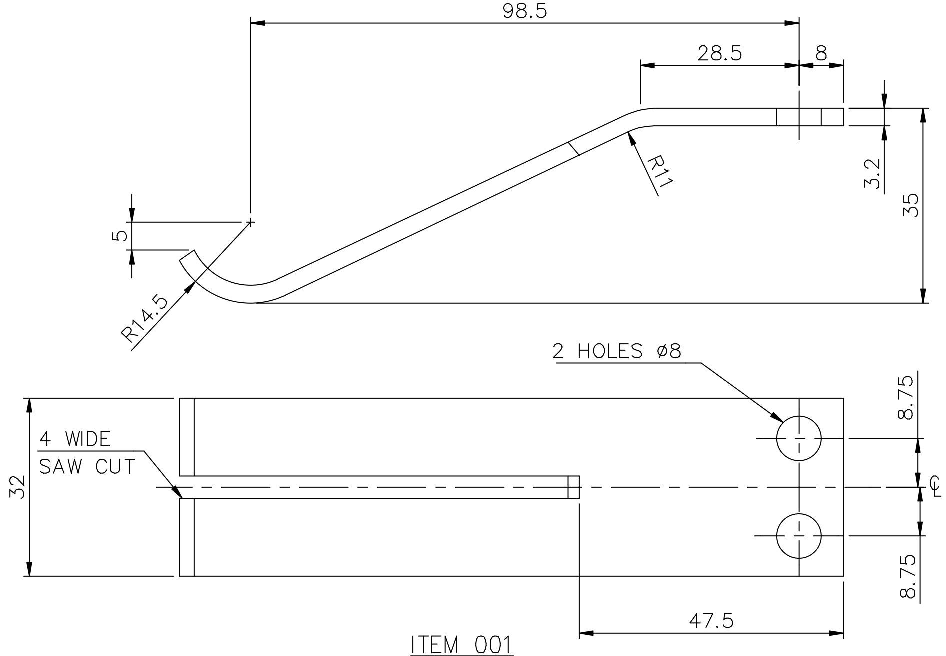

ITEM 001

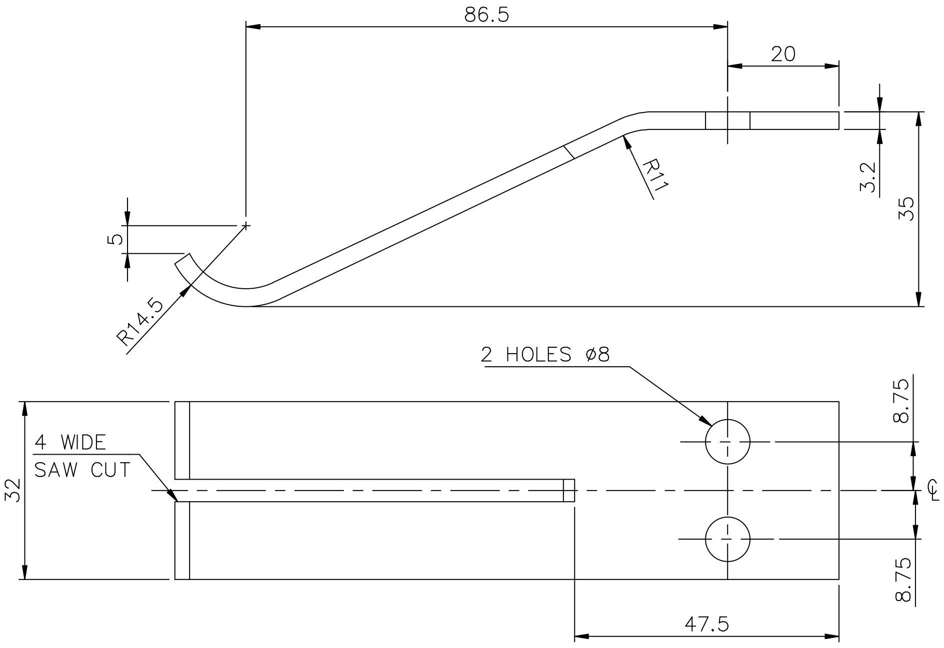

ITEM 002

STYLE LIST				
STYLE	IT. INCLUDED	DESCRIPTION OR REMARKS	RECORDED SIGE	RECORDED DATE
ST902475	001	EARTHING CONTACT	Sd/-	4.3.71

TOOL LIST		
ITEM	TOOL	DESCRIPTION
001	1497434	PRESS TOOL
001	1496292	PRESS TOOL FOR BENDING

VAR00	REMARKS	VAR. NO.	ITEM NO.	DESCRIPTION	STD	DRAWING NO.	IT.NO. / VAR.	MATL. CODE / MATL. SPCN.	A C I	UNIT	UNIT WT. / QTY.	GS	ZONE
			002	EARTH CONTACT 32X3.2TK X 123 LG PHOS BRZ STR				BP1211997014 BP12197	NA	Kg	0.1058		
			001	EARTHING CONTACT 32X3.2TK X 123 LG PHOS BRZ STR				BP1211997014 BP12197	NA	Kg	0.1058		

Column numbers: 65, 75 REMARKS; 78 79 VAR. NO.; 25 27 ITEM NO.; 29 58 DESCRIPTION; 59 STD; 60 77 DRAWING NO.; 29 31 IT.NO.; 32 33 VAR.; 34 45 MATL. CODE; 46 54 MATL. SPCN.; 55 A C I; 56 57 UNIT; 58 65 UNIT WT.; 68 71 QTY.; 72 GS; ZONE

28 →CARD TYPE-3 28 →CARD TYPE-1 28 →CARD TYPE-2

ADDITIONAL INFORMATION

STATUS OF DRAWING

DISTRIBUTION OF PRINTS

O.COPY-----1
SWM--------3
TCX--------1

mRikn dk i–dkj ;k xk–gd@ifj;kstuk dk uke
TYPE OF PRODUCT OR NAME OF CUSTOMER/PROJECT: VM24

HAkjr gsoh bysfDV&dYl fyfeVsM HAksiky
BHARAT HEAVY ELECTRICALS LTD. BHOPAL

	uke@NAME	gLrk@SIGN	fnaukd@DATE	osfj_ dh la[;k NO. OF VAR
cuk;k DRN	––	Sd/–	16.05.60	-
tWpk CKD	––	Sd/–	–	
vuqeksfnr APPD	––	Sd/–	–	

REV.	DATE	ALTERED / CHECKED / APPROVED	REMARKS
11	06.02.04	APPROVED DIVYA	DRG. REDRAWN. (DCA NO.-20241)
10	19.12.99		DIM 32 WAS 31.75. MATL. SPCN. BP 12197 WAS PS 12029. (DCA NO.-9777)

foHkx DEPT	dksM CODE	vu_ Vky_ uki dh Js.kh UNTOL.DIMS. GR.	vuqikr SCALE	HAkj fd_xk–_ WEIGHT (K.G.)	vls_ M&kbZax dk lanHAZ REF. TO ASSY. DRG.	en d–_ ITEM NO.	en_ la[;k NO. OF ITEM
SWE	409	3-250-01-00404	1:1		35225001759	001	002

'kh"AZd TITLE: EARTH CONTACT FOR BV3 OR 4 UNIT

vkjs[A d–_ DRAWING NO.: D9277173

iqu_@REV: 11

i="B d–_ SHT. No. 01 i="Bksa dh la[;k NO. OF SHT. 01

D9277173 -11- 01 REF. DRG. NO.

SIGN. & DATE

INVENTORY NO.

FIRST ANGLE PROJECTION

(ALL DIMENSIONS ARE IN mm)

DRG. NO. 35215001788

THE INFORMATION ON THIS DOCUMENT IS THE PROPERTY OF BHARAT HEAVY ELECTRICALS LIMITED
IT MUST NOT BE USED DIRECTLY OR INDIRECTLY IN ANY WAY DETRIMENTAL TO THE INTEREST OF THE COMPANY

FINISH: –

– HOT DIP GALVANISED TO AA0673608 (0.030 TK.xMIN.) FOR ITEM 001 & 002.
– TIN PLATING TO AA0673602 (0.013 TK.) FOR ITEMS 003 & 004.

PLATING AREA: –

IT. 001,002 ,003 & 004 – 718 SQ. CM.

FINISHED WT. ITEM 003 & 004 – 1.685 KG.

VAR00	REMARKS (65–75)	VAR. NO. (78 79)	ITEM NO. (25–27)	DESCRIPTION (29–58)	STD (59)	DRAWING NO. (60–77)	IT.NO. (29–31) / VAR. (32–33)	MATL. CODE (34–45) / MATL. SPCN. (46–54)	C-D (55)	UNIT (56 57)	UNIT WT. (58–65) / QTY. (68–71)	GS (72)	ZONE
			004	– 50X6 TK X 635 LG. HARD CPR. ST				BP1201903890 / AA12003	NA	N.A.	1.695		
			003	– 50X6 TK X 635 LG. HARD CPR. ST				BP1201903890 / AA12003	NA	Kg	1.695		
			002	– 50X6TK. X 635 LG. STR.STEEL FLAT				AA1010308041 / AA10108	NA	N.A.	1.4954		
			001	– 50X6TK. X 635 LG. STR.STEEL FLAT				AA1010308041 / AA10108	NA	Kg	1.4954		

28 → CARD TYPE-3 28 → CARD TYPE-1 28 → CARD TYPE-2

35215001788 -04– 01
REF. DRG. NO.

SIGN. & DATE

REV.	DATE	ALTERED	REV.	DATE	ALTERED
06	19.08.21	SKG	05	29.12.10	P.PARE
		CHECKED AKHIL			CHECKED AKHIL
		APPROVED AD			APPROVED MAK
	DEVELOPMENT VIEW FOR ITEM 001, 002, 003 & 004 CORRECTED. (DCA NO. - 37250)			WT. ADDED (DCA NO. 30135)	

INVENTORY NO.

REV.	DATE	ALTERED	REV.	DATE	ALTERED	REV.	DATE	ALTERED
04	24.07.07	P.PARE	03	06.02.04		02	25.12.02	Sd/-
		CHECKED KSM			CHECKED			CHECKED Sd/-
		APPROVED MAK			APPROVED H.R.P.			APPROVED Sd/-
	-ITEM 3,4 & SHT. 2 ADDED -VIEW SHIFTED TO SHT. 2 (DCA NO. 26902)			DRG. REDRAWN. (DCA)			2 SLOTS 8x12 WERE 2 HOLES ø8. (DCA 11821)	

ADDITIONAL INFORMATION

STATUS OF DRAWING

DISTRIBUTION OF PRINTS

O.COPY-----1
SWM--------3
TCX---------1

mRikn dk i–dkj ;k
xk–gd@ifj;kstuk dk uke
TYPE OF PRODUCT OR
NAME OF CUSTOMER/PROJECT

VM–12

HAkjr gsoh bysfDV&dYl fyfeVsM
HAksiky
BHARAT HEAVY ELECTRICALS LTD.
BHOPAL

	uke@NAME	gLrk@SIGN	fnaukd@DATE
cuk;k DRN	P.PARE	SD/-	24.07.07
tWpk CKD	KSM	SD/-	24.07.07
vuqksfnr APPD	MAK	SD/-	24.07.07

osfj_ dh la[;k NO. OF VAR

foHAkx DEPT SWE | vu_ Vky_ uki dh Js.kh UNTOL.DIMS. GR. M | vuqlkr SCALE 1:1 | HAkj fd_xk–_ WEIGHT (K.G.)

dksM CODE 409 | AA0230208

vis_ M&kbZax dk lanHAZ REF. TO ASSY. DRG. 35215002008 15215001531 | en d–_ ITEM NO. 015,016 023,024 | en_ la[;k NO. OF ITEM 004

'kh"AZ TITLE: EARTH BAR

vkjs[A d–DRAWING NO. 35215001788 | iqu_ REV 06

i="B d–SHT. No. 01 | i="Bksa dh la[;k NO. OF SHT. 02

A3

FIRST ANGLE PROJECTION

ALL DIMENSIONS ARE IN mm

DRG NO 3 521 50 01788

THE INFORMATION ON THIS DOCUMENT IS THE PROPERTY OF BHARAT HEAVY ELECTRICALS LIMITED.
IT MUST NOT BE USED DIRECTLY OR INDIRECTLY IN ANY WAY DETRIMENTAL TO THE INTREST OF THE COMPANY.

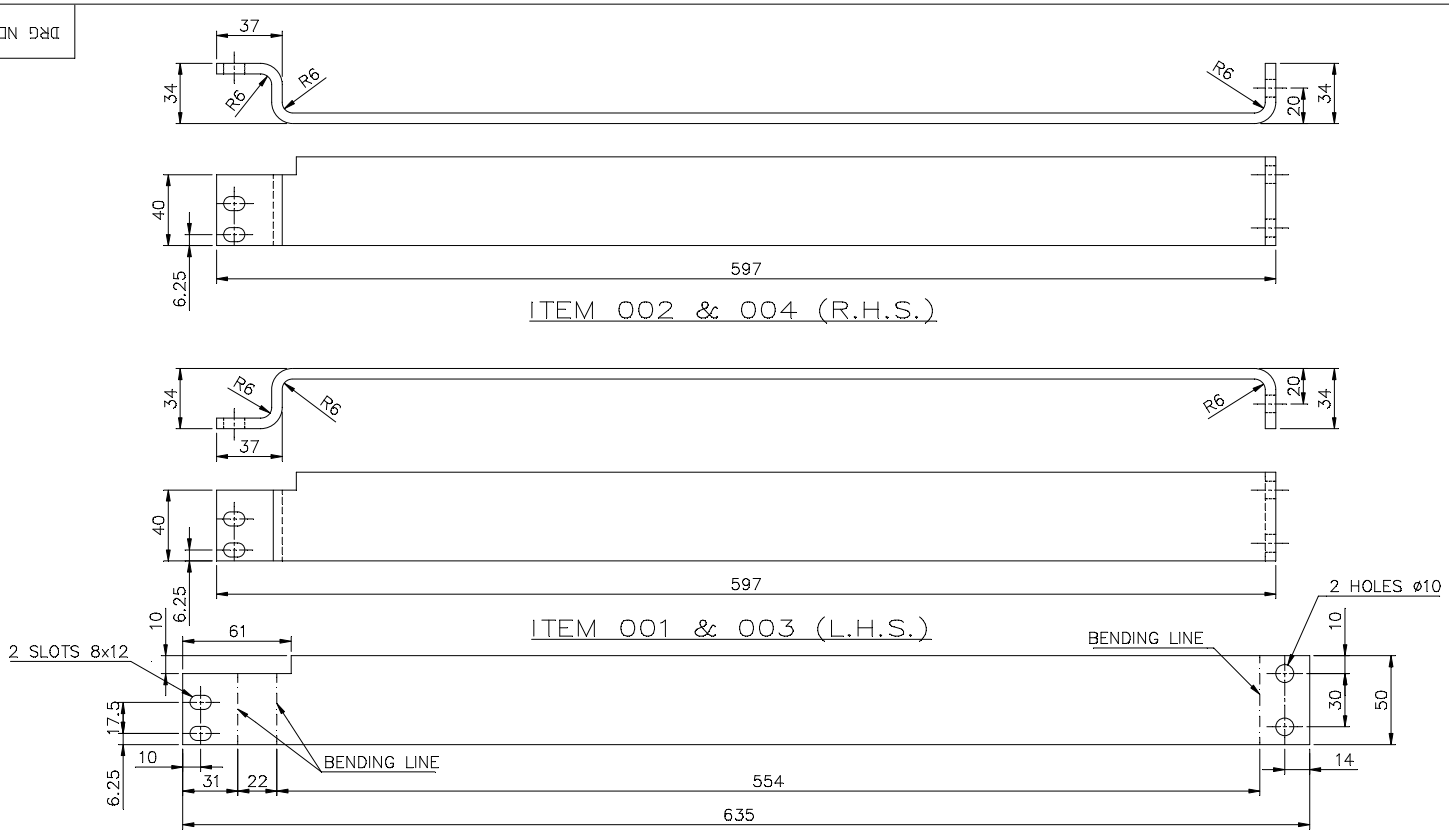

DEVELOPMENT OF IT. 001,002,003 & 004

VAR 00	REMARKS	VAR NO.	ITEM NO.	DESCRIPTION	STD	DRAWING NO.	IT.NO. / VAR	MATERIAL CODE / MATL. SPCN.	A / C	KG. / UNIT	UNIT WT. / QTY

352150017 88-R04-S02
REF.DRG.NO.

SIGN. & DATE

REV.	DATE	ALTERED	REV.	DATE	ALTERED
06	19.08.21	SKG	05	29.12.10	P.PARE
		CHECKED AKHIL			CHECKED AKHIL
		APPROVED AD			APPROVED MAK
	DEVELOPMENT VIEW FOR ITEM 001, 002, 003 & 004 CORRECTED. (DCA NO. - 37250)			WT. ADDED (DCA NO. 30135)	

ADDITIONAL INFORMATION

STATUS OF DRAWING B

DISTRIBUTION OF PRINTS
OFFICE COPY - 1
SWGR SHOPS - 3
TCX - 1

TYPE OF PRODUCT OR NAME OF CUST/PROJ: VM-12 (OPTIMISED)

BHARAT HEAVY ELECTRICALS LIMITED
BHOPAL

	NAME	SIGN	DATE	NO. OF VAR
DRN	--		--	
CKD	R.R.G.	Sd/-	31.10.90	
APPD	M.A.S.	Sd/-	31.10.90	-

INVENTORY NO.

REV	DATE	DRN	REV	DATE	DRN	REV	DATE	DRN
04	24.07.07	P.PARE	03	06.02.04		02	25.12.02	Sd/-
		CKD KSM			CKD			CKD Sd/-
		APPD MAK			APPD H.R.P.			APPD Sd/-
	-ITEM 3,4 & SHT. 2 ADDED -VIEW SHIFTED TO SHT. 2 (DCA NO. 26902)			DRG. REDRAWN. (DCA)			2 SLOTS 8x12 WERE 2 HOLES ø8. (DCA 11821)	

DEPT	UN. TOL.DIM.GR.		SCALE	WEIGHT (KG.)	REF TO ASSY	ITEM NO.	NO.OF ITEMS
SWE	M		1:2.5	-	15215001531	015,016 023,024	004
CODE 409	AA 0230208						

TITLE: EARTH BAR

DRG NO 3 521 50 01788 REV. 06

SHT.NO. 02 NO.OF SHT. 02

SDIS FN: -

FIRST ANGLE PROJECTION

ALL DIMENSIONS ARE IN mm

DRG NO 3521 50 01879

THE INFORMATION ON THIS DOCUMENT IS THE PROPERTY OF BHARAT HEAVY ELECTRICALS LIMITED.
IT MUST NOT BE USED DIRECTLY OR INDIRECTLY IN ANY WAY DETRIMENTAL TO THE INTREST OF THE COMPANY.

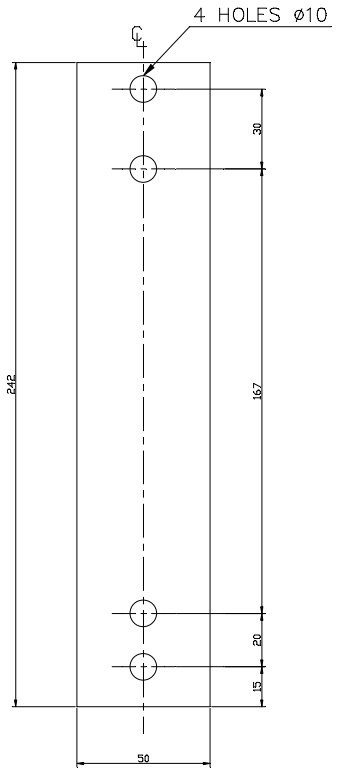

ITEM 001

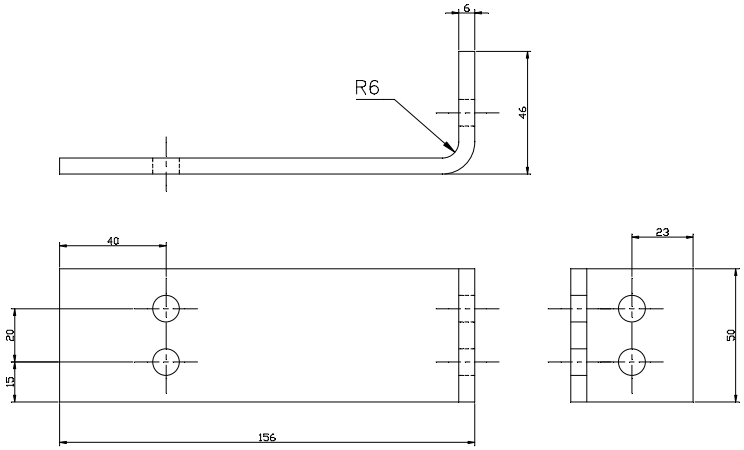

ITEM 002

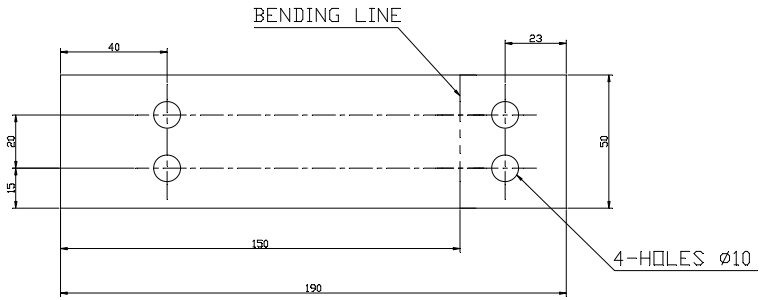

DEVELOPMENT OT ITEM 002

VAR 00	REMARKS	VAR NO.	ITEM NO.	DESCRIPTION	STD	DRAWING NO.	IT.NO. / VAR	MATERIAL CODE / MATL. SPCN.	A / C	UNIT	UNIT WT. / QTY
			002	50 × 6 × 190 LG. H COPPER STRIP				BP1201903890 / AA12003		KG	0.507 / 001
			001	50 × 6 × 242 LG. H COPPER STRIP				BP1201903890 / AA12003		KG	0.646 / 001

AREA OF PLATING: –

ITEM 001 – 277 SQ. MM.
ITEM 002 – 218 SQ. MM.

FINISH: –

– HOT DIP GALVANISED (0.030 TK. MIN.) TO AA 0673608 FOR IT. 001 TO 004

FINISHED WT. ITEM 001 – 0.65 KG.
002 – 0.491 KG.

ADDITIONAL INFORMATION

STATUS OF DRAWING

DISTRIBUTION OF PRINTS
OFFICE COPY – 1
SWGR SHOPS – 3
TCX – 1

TYPE OF PRODUCT OR NAME OF CUST/PROJ: VM12 (OPTIMISED)

BHARAT HEAVY ELECTRICALS LIMITED
BHOPAL

	NAME	SIGN	DATE	NO. OF VAR
DRN	S.U.S.	Sd/–	15.03.04	
CKD	K.S.M.	Sd/–	15.03.04	
APPD	H.R.P.	Sd/–	15.03.04	

REV.	DATE		
01	29.12.10	ALTERED	P.PARE
		CHECKED	AKHIL
		APPROVED	MAK

WT. ADDED

(DCA NO. 30136)

REV	DATE	
		DRN
		CKD
		APPD

DEPT	UN. TOL.DIM.GR.	SCALE	WEIGHT (KG.)	REF TO ASSY	ITEM NO.	NO.OF ITEMS
SWE	M	1:2	–	15215001531	–	002
CODE 409	AA 0230208					

TITLE: EARTH CONNECTION

DRG NO 3521 50 01879 REV. 01

SHT.NO. 01 NO.OF SHT. 01

3521500187 9-R00-S01

REF.DRG.NO.

SIGN. & DATE

INVENTORY NO.

FIRST ANGLE PROJECTION

ALL DIMENSIONS ARE IN mm

DRG NO 3 521 50 01878

THE INFORMATION ON THIS DOCUMENT IS THE PROPERTY OF BHARAT HEAVY ELECTRICALS LIMITED.
IT MUST NOT BE USED DIRECTLY OR INDIRECTLY IN ANY WAY DETRIMENTAL TO THE INTREST OF THE COMPANY.

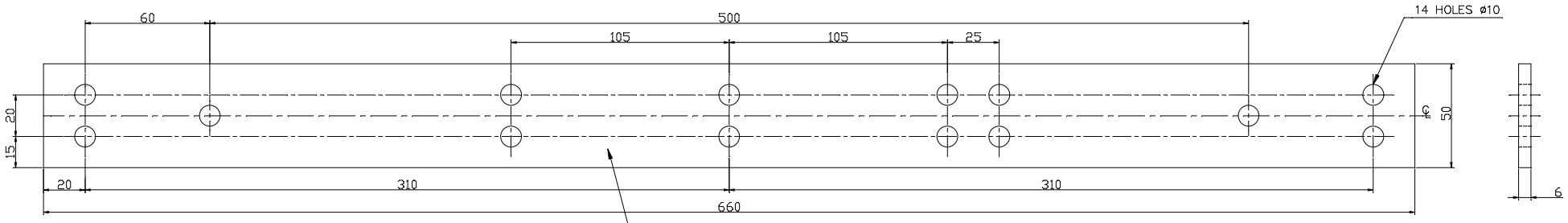

ITEM 001

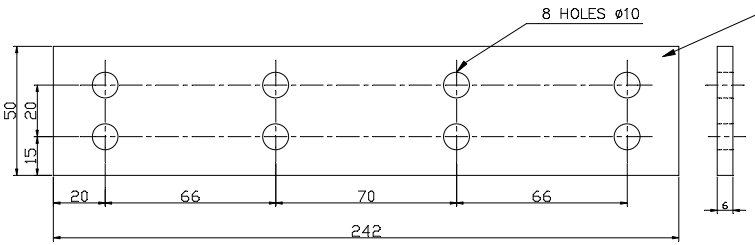

ITEM 002

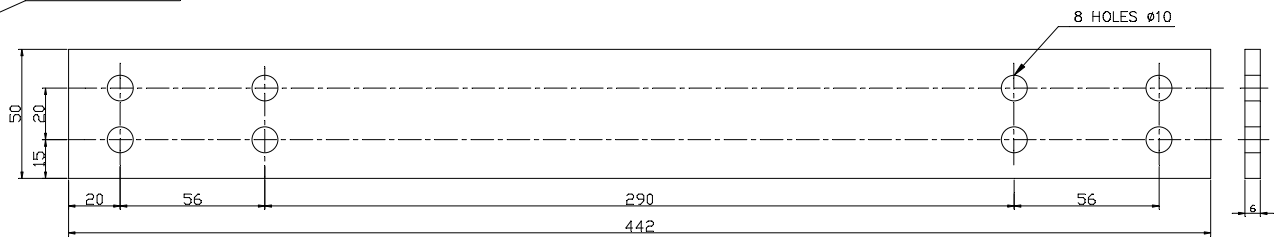

ITEM 003

VAR 00	REMARKS	VAR NO.	ITEM NO.	DESCRIPTION	STD	DRAWING NO.	IT.NO. / VAR	MATERIAL CODE / MATL. SPCN.	A / C	UNIT	UNIT WT. / QTY
			003	50 x 6 x 442 LG. HARD COPPER STRIP				BP1201903890 / AA12003		KG.	1.184 / 001
			002	50 x 6 x 242 LG. HARD COPPER STRIP				BP1201903890 / AA12003		KG.	0.646 / 001
			001	50 x 6 x 660 LG. HARD COPPER STRIP				BP1201903890 / AA12003		KG.	1.762 / 001

FINISH: –

- TIN PLATING TO AA 0673613 (0.013 TK. TO 0.015 TK.) FOR IT.001 TO 003
- FINISHED WEIGHT ITEM-001 – 1.762 Kg
  ITEM-002 – 0.613 Kg
  ITEM-003 – 1.184 Kg

ADDITIONAL INFORMATION

STATUS OF DRAWING B

DISTRIBUTION OF PRINTS
OFFICE COPY – 1
SWGR SHOPS – 3
TCX – 1

TYPE OF PRODUCT OR NAME OF CUST/PROJ: VM12 (OPTIMISED)

BHARAT HEAVY ELECTRICALS LIMITED
BHOPAL

	NAME	SIGN	DATE	NO. OF VAR
DRN	S.U.S.	Sd/–	15.03.04	–
CKD	K.S.M.	Sd/–	15.03.04	
APPD	H.R.P.	Sd/–	15.03.04	

REV	DATE	DRN / CKD / APPD	REV	DATE	DRN / CKD / APPD	REV	DATE	DRN / CKD / APPD
03	24.09.12	DRN AKN / CKD AKHIL / APPD MAK	02	20.06.11	DRN S.D.MISHRA / CKD AKHIL / APPD MAK	01	30.12.10	DRN PARE / CKD AKHIL / APPD MAK
	DIM. 56 TO BE CHANGED TO 66 & DIM. 90 TO BE CHANGED TO 70 OF ITEM 002. (DCA NO. 31340)			ITEM NO. 003 ADDED & FINISH CHANGED TO TIN PLATING DCA NO. 30428			–WEIGHT ADDED.	

DEPT	UN. TOL.DIM.GR.	SCALE	WEIGHT (KG.)	REF TO ASSY	ITEM NO.	NO.OF ITEMS
SWE	M	1:2	–	35215002008		003
CODE 409	AA 0230208					

TITLE: EARTH BAR

DRG NO 3 521 50 01878 REV. 03

SHT.NO. 01 NO.OF SHT. 01

35215001878-R00-S01
REF.DRG.NO.

SIGN. & DATE

INVENTORY NO.

7451/2024/HEP-SWM20900

DRG. NO. 35216602179

THE INFORMATION ON THIS DOCUMENT IS THE PROPERTY OF BHARAT HEAVY ELECTRICALS LIMITED
IT MUST NOT BE USED DIRECTLY OR INDIRECTLY IN ANY WAY DETRIMENTAL TO THE INTEREST OF THE COMPANY

VAR09	VAR08	VAR07	VAR06	VAR05	VAR04	VAR03	VAR02	VAR01	VAR00	REMARKS (65–75)	VAR. NO. (78 79)	ITEM NO. (25 27)	DESCRIPTION (29–58)	STD (59)	DRAWING NO. (60–77)	IT.NO. (29 31) / VAR. (32 33)	MATL. CODE (34–45) / MATL. SPCN. (46–54)	CIA (55)	UNIT (56 57)	UNIT WT. (58–65) / QTY. (68–71)	GS (72)	ZONE
–	001	001	001									014	EARTHING CONNECTION(50X6TK)		35216602175	003		NA	Kg	2.498		
–	001	001	001									013	EARTHING CONNECTION		35216602174	005		NA	Kg	0.219		
002	004	002	002	002	002	002	004	004	002			012	L-SUPPORT		35216602213	001		NA	Kg	0.053		
–				001								011	EARTHING CONNECTION(50X6TK)		35216602176	002		NA	Kg	2.116		
–					001							010	EARTHING CONNECTION(50X6TK)		35216602174	003		NA	Kg	1.403		
–						001						009	EARTHING CONNECTION(50X6TK)		35216602175	002		NA	Kg	2.641		
006	010	010	006	005	005	006	010	010	006			008	NUT HEX A M8-8				AA7151115024	NA	Kg	0.005		
006	010	010	006	005	005	006	010	010	006			007	WASHER SPRING LOCK SC B8-ST				AA7164002053	NA	Kg	0.002		
006	010	010	006	005	005	006	010	010	006			006	WASHER MCD 8.4-ST				AA7161001056	NA	Kg	0.002		
006	010	010	006	005	005	006	010	010	006			005	SCRU HEX A M8X20-8.8				AA7121123118	NA	Kg	0.013		
							001					004	EARTHING CONNECTION(40X5TK.)		35216602176	001		NA	Kg	1.411		
								001				003	EARTHING CONNECTION(40X5TK.)		35216602174	001		NA	Kg	0.925		
						001	001	001	001			002	EARTHING CONNECTION		35216602174	002		NA	Kg	0.234		
							001	001	001			001	EARTHING CONNECTION(40X5TH.)		35216602175	001		NA	Kg	1.835		

28 → CARD TYPE-3 28 → CARD TYPE-1 28 → CARD TYPE-2

35216602179-01-01
REF. DRG. NO.

SIGN. & DATE

REV.	DATE			REV.	DATE			REV.	DATE		
05	30.01.15	ALTERED	AR Sd/–	04	12.11.12	ALTERED	MKN Sd/–				
		CHECKED	AKHIL Sd/–			CHECKED	AKHIL Sd/–				
		APPROVED	MAK Sd/–			APPROVED	MAK Sd/–				
	VAR 09 ADDED. (DCA. NO. 32884)				-VAR. 04 & 05 UPDATED & CT CH. EARTHING CONNECTION DELETED. (DCA. NO. 31436)						

INVENTORY NO.

REV	DATE			REV.	DATE			REV.	DATE		
03	30.12.10	ALTD AKHIL	Sd/–	02	10.11.06	ALTERED	Sd/–	01	02.09.05	ALTERED	Sd/–
		CHKD AKHIL	Sd/–			CHECKED	Sd/–			CHECKED	Sd/–
		APPD MAK	Sd/–			APPROVED	Sd/–			APPROVED	Sd/–
		WEIGHT UPDATED (DCA-30148)				ITEM-013 TO 016 AND VAR-06 TO 08 ADDED (DCA-26257)				ITEM-009 TO 012,VAR-03 TO 05 & SHEET-02 ADDED (DCA-23829)	

ADDITIONAL INFORMATION

STATUS OF DRAWING

DISTRIBUTION OF PRINTS

O.COPY-----1
SWM--------3
TCX--------1

mRikn dk i-dkj ;k
xk-gd@ifj;kstuk dk uke
TYPE OF PRODUCT OR NAME OF CUSTOMER/PROJECT

VM-12(820W)

बीएचईएल BHEL

HAkjr gsoh bysfDV&dYl fyfeVsM
HAksiky
BHARAT HEAVY ELECTRICALS LTD.
BHOPAL

	uke@NAME	gLrk@ SIGN	fnaukd@DATE
cuk;k DRN	SASHI	SASHI	29/12/2003
tWpk CKD	MANI	Sd/–	30/12/2003
vuqeksfnr APPD	PATEL	PATEL	10/01/2005

osfj_ dh la[;k NO. OF VAR: 08

foHAkx DEPT: SWE
dksM CODE: 409
vu_ Vky_ uki dh Js.kh UNTOL.DIMS. GR.
vuqikr SCALE: 1:1
HAkj fd_xk-_ WEIGHT (K.G.)
vls_ M&kbZax dk lanHAZ REF. TO ASSY. DRG.
en d-_ ITEM NO.
en_ la[;k NO. OF ITEM: 016

'kh"AZ TITLE: EARTHING ARRGT.FOR STD.CT.CHMBR.+ EXT. CHMBR.

vkjs[A d-_ DRAWING NO.: 35216602179
iqu_@REV: 05

i="B d-SHT. No. 01 i="Bksa dh la[;k NO. OF SHT. 02

DRG. NO. 35216602179

VAR NO.	DESCRIPTION	EXTENSION CHAMBER SIZE	CONNECTION SIZE	RATED AMPS	GES. NO.	ASSY. REF.	REMARK
09	EARTHING CONNECTION	FOR 524 REAR EXT. CHAMBER	1NO.50X6TH.BR.ST.	–	409541142	25216601694	
08	EARTHING CONNECTION	820DX820X1835	1NO.50X6TH.BR.ST.	–	409560161	25216601694	
07	EARTHING CONNECTION	(524DX820X1835	1NO.50X6TH.BR.ST.	–	409560160	25216601694	
06	EARTHING CONNECTION	–	1NO.50X6TH.BR.ST.	–	409560159	25216601694	
05	EARTHING CONNECTION	820DX820X1835	1NO.50X6TH.CU.	–	409550212	25216601694	
04	EARTHING CONNECTION	(524DX820X1835	1NO.50X6TH.CU.	–	409550211	25216601694	
03	EARTHING CONNECTION	–	1NO.50X6TH.CU.	–	409550210	25216601694	
02	EARTHING CONNECTION	820DX820X1835	1NO.40X5TH.CU.	–	409540083	25216601694	
01	EARTHING CONNECTION	(524DX820X1835	1NO.40X5TH.CU.	–	409540082	25216601694	
00	EARTHING CONNECTION	–	1NO.40X5TH.CU.	–	409540081	25216601694	

VAR09	VAR08	VAR07	VAR06	VAR05	VAR04	VAR03	VAR02	VAR01	VAR00	65 REMARKS 75	78 79 VAR. NO.	25 ITEM NO. 27	29 DESCRIPTION 58	59 STD	60 DRAWING NO. 77	29 IT.NO. 31 / 32 VAR. 33	34 MATL. CODE 45 / 46 MATL. SPCN. 54	55 C	56 57 UNIT	58 UNIT WT. 65 / 68 QTY. 71	72 GS	ZONE
–	001											016	EARTHING CONNECTION(50X6TK)		35216602176	003		NA	Kg	2.001		
001		001										015	EARTHING CONNECTION(50X6TK)		35216602174	004		NA	Kg	1.295		

28 ——► CARD TYPE-3 | 28 ——► CARD TYPE-1 | 28 ——► CARD TYPE-2

REV.	DATE				DESCRIPTION
05	30.01.15	ALTERED AR Sd/–	CHECKED AKHIL Sd/–	APPROVED MAK Sd/–	-VAR 009 ADDED. (DCA. NO. 32884)
04	12.11.12	ALTERED MKN Sd/–	CHECKED AKHIL Sd/–	APPROVED MAK Sd/–	-VAR. 04 & 05 UPDATED & CT CH. EARTHING CONNECTION DELETED. (DCA. NO. 31436)
03	30.12.10	ALTD AKHIL Sd/–	CHKD AKHIL Sd/–	APPD MAK Sd/–	WEIGHT UPDATED (DCA-30148)
02	10.11.06	ALTERED Sd/–	CHECKED Sd/–	APPROVED Sd/–	ITEM-013 TO 016 AND VAR-06 TO 08 ADDED (DCA-26257)
01	02.09.05	ALTERED Sd/–	CHECKED Sd/–	APPROVED Sd/–	ITEM-009 TO 012,VAR-03 TO 05 & SHEET-02 ADDED (DCA-23829)

ADDITIONAL INFORMATION

STATUS OF DRAWING

DISTRIBUTION OF PRINTS

O.COPY-----1
SWM---------3
TCX---------1

mRikn dk i-dkj ;k xk-gd@ifj;kstuk dk uke
TYPE OF PRODUCT OR NAME OF CUSTOMER/PROJECT: VM-12(820W)

HAkjr gsoh bysfDV&dYl fyfeVsM HAksiky
BHARAT HEAVY ELECTRICALS LTD. BHOPAL

cuk;k	uke@NAME	gLrk@ SIGN	fnaukd@DATE
DRN	MANI	Sd/–	07/09/2005
tWpk CKD	MANI	Sd/–	07/09/2005
vuqeksfnr APPD			

osfj_ dh la[;k NO. OF VAR: 08

foHAkx DEPT: SWE
dksM CODE: 409
vu_ Vky_ uki dh Js.kh UNTOL.DIMS. GR.
vuqikr SCALE: 1:1
HAkj fd_xk-_ WEIGHT (K.G.)
vls_ M&kbZax dk lanHAZ REF. TO ASSY. DRG.
en d-_ ITEM NO.
en_ la[;k NO. OF ITEM: 016

'kh"AZd@TITLE: EARTHING ARRGT.FOR STD.CT.CHMBR.+EXT.CHMBR.

vkjs[A d-@DRAWING NO.: 35216602179
iqu_@REV: 05
i="B d-@SHT. No.: 02
i="Bksa dh la[;k@NO. OF SHT.: 02

A3

THE INFORMATION ON THIS DOCUMENT IS THE PROPERTY OF BHARAT HEAVY ELECTRICALS LIMITED IT MUST NOT BE USED DIRECTLY OR INDIRECTLY IN ANY WAY DETRIMENTAL TO THE INTEREST OF THE COMPANY

35216602179-01-02
REF. DRG. NO.

SIGN. & DATE

INVENTORY NO.

FIRST ANGLE PROJECTION

(ALL DIMENSIONS ARE IN mm)

DRG. NO. 35216602174

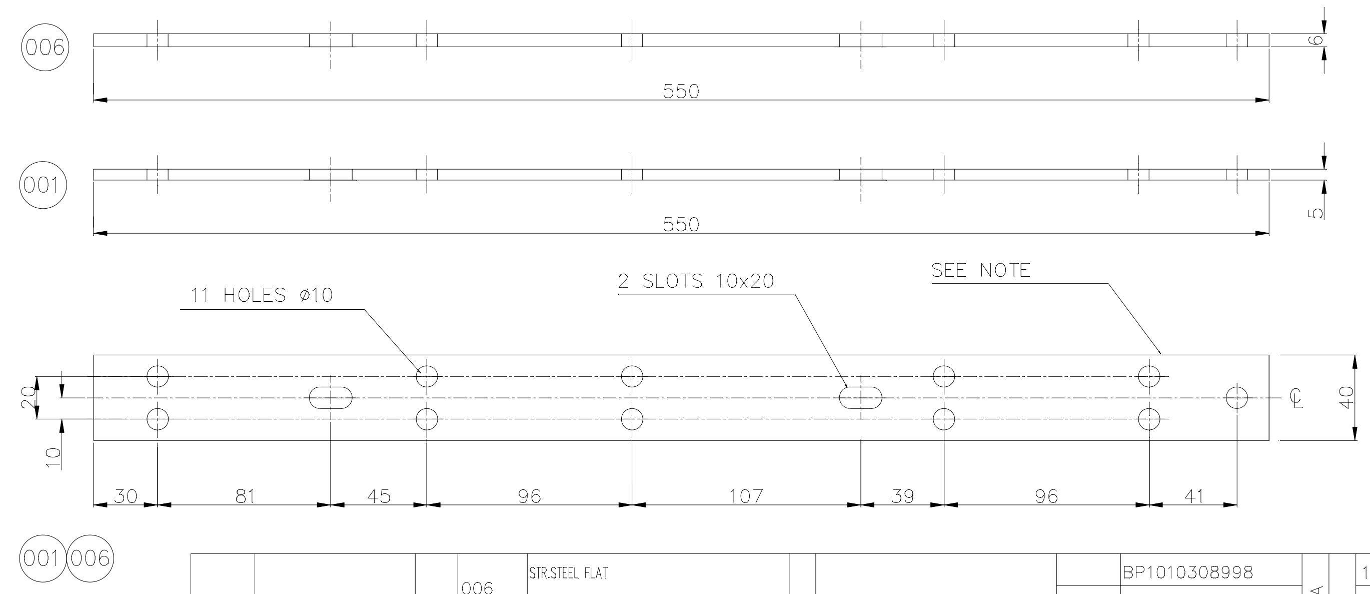

THE INFORMATION ON THIS DOCUMENT IS THE PROPERTY OF BHARAT HEAVY ELECTRICALS LIMITED
IT MUST NOT BE USED DIRECTLY OR INDIRECTLY IN ANY WAY DETRIMENTAL TO THE INTEREST OF THE COMPANY

VAR00	REMARKS	VAR. NO.	ITEM NO.	DESCRIPTION	STD	DRAWING NO.	IT.NO. / VAR.	MATL. CODE / MATL. SPCN.	C.A.C	UNIT	UNIT WT. / QTY.	GS	ZONE
			006	STR.STEEL FLAT 40X6TK. X 550 LG. STR.STEEL FL				BP1010308998 / AA10108	NA	Kg	1.036		
			005	STR.STEEL FLAT 50X6TK. X 93 LG. STR.STEEL FLA				AA1010308041 / AA10108	NA	Kg	0.219		
			004	STR.STEEL FLAT 50X6TK. X 550 LG. STR.STEEL FL				AA1010308041 / AA10108	NA	Kg	1.295		
			003	HARD CPR. STRIP 50X6TK X 550 LG HARD CPR. STRI				BP1201903890 / AA12003	NA	Kg	1.403		
			002	HARD CPR. STRIP 50X6TK X 93 LG HARD CPR. STRIP				BP1201903890 / AA12003	NA	Kg	0.248		
			001	HARD CPR. STRIP 40X5TK X 550 LG. HARD CPR. STR				AA1201903068 / AA12003	NA	Kg	0.979		

Column positions: 65–75 REMARKS; 78 79 VAR. NO.; 25 27 ITEM NO.; 29–58 DESCRIPTION; 59 STD; 60–77 DRAWING NO.; 29 31 IT.NO.; 32 33 VAR.; 34–45 MATL. CODE; 46–54 MATL. SPCN.; 55 C.A.C; 56 57 UNIT; 58–65 UNIT WT.; 68–71 QTY.; 72 GS

28 ——CARD TYPE-3 | 28 ——CARD TYPE-1 | 28 ——CARD TYPE-2

ADDITIONAL INFORMATION

STATUS OF DRAWING

DISTRIBUTION OF PRINTS

O.COPY-----1
SWM--------3
TCX--------1

mRikn dk i-dkj ;k xk-gd@ifj;kstuk dk uke
TYPE OF PRODUCT OR NAME OF CUSTOMER/PROJECT: VM-12(820W)

HAkjr gsoh bysfDV&dYl fyfeVsM HAksiky
BHARAT HEAVY ELECTRICALS LTD. BHOPAL

	uke@NAME	gLrk@SIGN	fnaukd@DATE
cuk;k DRN	SASHI	SASHI	29/12/2003
tWpk CKD	MANI	Sd/-	30/12/2003
vuqeksfnr APPD	PATEL	PATEL	10/01/2005

osfj_ dh la[;k NO. OF VAR

REV.	DATE		
04	30.12.10	ALTD AKHIL / CKD AKHIL / APPD MAK	WEIGHT UPDATED (DCA-30146)
03	29.12.06	ALTD / CKD / APPD	GALVENISING NOTE ADDED FOR STEEL ITEMS. BRT.S.FLAT REPLACED BY STR.S.FLAT FOR ITEMS 004,005&006 (DCA-26522)
02	10.11.06	ALTERED / CHECKED / APPROVED	ITEMS-004 TO 006 ADDED (DCA-26258)
01	02.09.05	ALTERED / CHECKED / APPROVED	ITEM-002 REDESIGNED ITEM-003 & SHEET-02 ADDED (DCA-23832)

foHAkx DEPT SWE | dksM CODE 409 | vu_ Vky_ uki dh Js.kh UNTOL.DIMS. GR. | vuqikr SCALE 1:1 | HAkj fd_xk-_ WEIGHT (K.G.) | vls_ M&kbZax dk lanHAZ REF. TO ASSY. DRG. | en d-_ ITEM NO. | en_ la[;k NO. OF ITEM

'kh"AZd TITLE: EARTHING CONNECTION

vkjs[A d-DRAWING NO. 35216602174 | iqu_@REV 04

i="B d-SHT. No. 01 | i="Bksa dh la[;k NO. OF SHT. 02

35216602174-01-01 REF. DRG. NO.

SIGN. & DATE

INVENTORY NO.

A3

FIRST ANGLE PROJECTION

(ALL DIMENSIONS ARE IN mm)

DRG. NO. 35216602174

NOTE: –

PUNCH DRG.NO. IT. NO./VAR.NO. AT THIS LOCATION

FINISH: –

1–FOR TIN PLATING REFER SG14610 AND ENGG.SPEC./MID TO ITEMS 001,002&003

2–HOT DIP GALVANISED (0.030 TK. MIN.) TO AA 0673608 FOR IT. 004,005&006

FINISHED WEIGHT: Item–001–––0.925 Kg
Item–002–––0.234 Kg
Item–003–––1.414 Kg

UNSPECIFIED TOLERANCES SHALL BE : –

FOR SHEARING OF FLATS AS PER AA0230409
FOR MACHINING MEDIUM AA0230208.

AREA OF PLATING: –

FOR ITEM 001&006– 495.104 sq.cm.
FOR ITEM 003&004– 622.00 sq.cm.
FOR ITEM 002&005– 110.00 sq.cm.

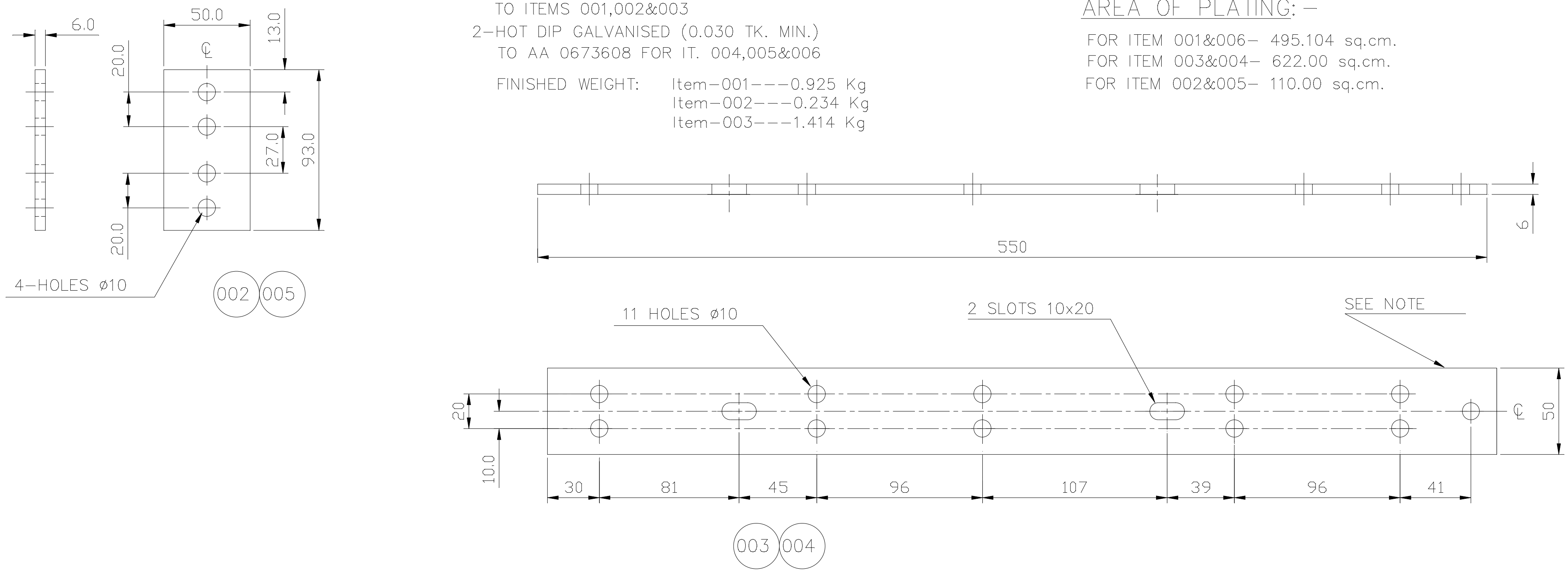

THE INFORMATION ON THIS DOCUMENT IS THE PROPERTY OF BHARAT HEAVY ELECTRICALS LIMITED
IT MUST NOT BE USED DIRECTLY OR INDIRECTLY IN ANY WAY DETRIMENTAL TO THE INTEREST OF THE COMPANY

35216602174–01– 02
REF. DRG. NO.

SIGN. & DATE

INVENTORY NO.

REV.	DATE		
04	30.12.10	ALTD	AKHIL
		CKD	AKHIL
		APPD	MAK

WEIGHT UPDATED
(DCA–30146)

REV.	DATE		
03	29.12.06	ALTD / CKD / APPD	GALVENISING NOTE ADDED FOR STEEL ITEMS. BRT.S.FLAT REPLACED BY STR.S.FLAT FOR ITEMS 004,005&006 (DCA–26522)
02	10.11.06	ALTERED / CHECKED / APPROVED	ITEMS–004 TO 006 ADDED (DCA–26258)
01	02.09.05	ALTERED / CHECKED / APPROVED	ITEM–002 REDESIGNED ITEM–003 & SHEET–02 ADDED (DCA–23832)

ADDITIONAL INFORMATION

STATUS OF DRAWING

DISTRIBUTION OF PRINTS

O.COPY–––––1
SWM––––––––3
TCX––––––––1

mRikn dk i–dkj ;k xk–gd@ifj;kstuk dk uke
TYPE OF PRODUCT OR NAME OF CUSTOMER/PROJECT: VM–12(820W)

HAkjr gsoh bysfDV&dYl fyfeVsM HAksiky
BHARAT HEAVY ELECTRICALS LTD. BHOPAL

cuk;k	uke@NAME	gLrk@SIGN	fnaukd@DATE
DRN	MANI	Sd/–	07/09/2005
tWpk CKD	MANI	Sd/–	07/09/2005
vuqeksfnr APPD			

osfj_ dh la[;k NO. OF VAR

foHkx DEPT	vu_ Vky_ uki dh Js.kh UNTOL.DIMS. GR.	vuqikr SCALE	HAkj fd_xk–_ WEIGHT (K.G.)	vls_ M&kbZax dk lanHZ REF. TO ASSY. DRG.	en d–_ ITEM NO.	en_ la[;k NO. OF ITEM
SWE		1:1				

dksM CODE 409

'kh"AZd TITLE: EARTHING CONNECTION

vkjs[A d– DRAWING NO. 35216602174

iqu_@REV 04

i="B d– SHT. No. 02 | i="Bksa dh la[;k NO. OF SHT. 02

A3

FIRST ANGLE PROJECTION

(ALL DIMENSIONS ARE IN mm)

DRG. NO. 35216602175

THE INFORMATION ON THIS DOCUMENT IS THE PROPERTY OF BHARAT HEAVY ELECTRICALS LIMITED
IT MUST NOT BE USED DIRECTLY OR INDIRECTLY IN ANY WAY DETRIMENTAL TO THE INTEREST OF THE COMPANY

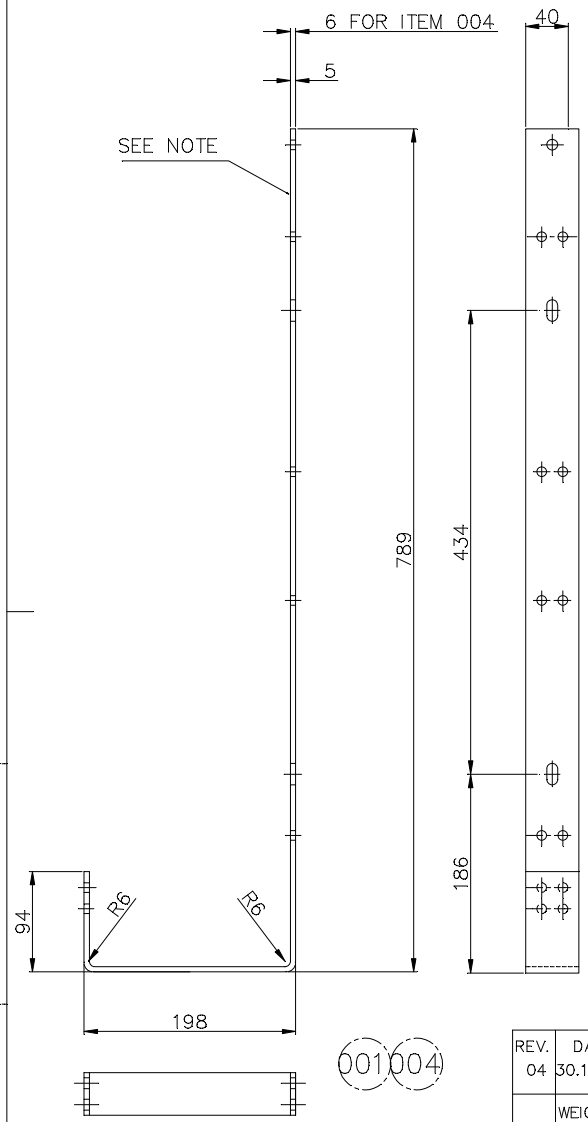

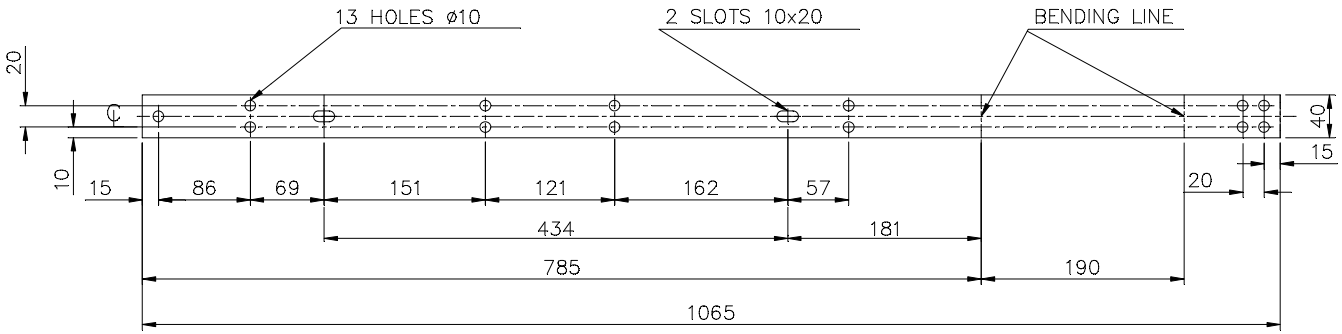

DEVELOPMENT OF IT. 001&004

VAR00	REMARKS (65–75)	VAR. NO. (78 79)	ITEM NO. (25–27)	DESCRIPTION (29–58)	STD (59)	DRAWING NO. (60–77)	IT.NO. (29–31) / VAR. (32–33)	MATL. CODE (34–45) / MATL. SPCN. (46–54)	CAT (55)	UNIT (56 57)	UNIT WT. (58–65) / QTY. (68–71)	GS (72)	ZONE
			004	STR.STEEL FLAT 40X6TK. X 1065 LG STR.STEEL FL			BP1010308998 / AA10108		NA	Kg	2.006		
			003	STR.STEEL FLAT 50X6TK. X 1061 LG STR.STEEL FL			AA1010308041 / AA10108		NA	Kg	2.498		
			002	HARD CPR. STRIP 50X6TK X 1061 LG. HARD CPR. ST			BP1201903890 / AA12003		NA	Kg	2.833		
			001	HARD CPR. STRIP 40X5TK X 1065 LG. HARD CPR. ST			AA1201903068 / AA12003		NA	Kg	1.896		

28 → CARD TYPE-3 28 → CARD TYPE-1 28 → CARD TYPE-2

ADDITIONAL INFORMATION

STATUS OF DRAWING

DISTRIBUTION OF PRINTS

O.COPY-----1
SWM--------3
TCX---------1

mRikn dk i-dkj ;k
xk-gd@ifj;kstuk dk uke
TYPE OF PRODUCT OR
NAME OF CUSTOMER/PROJECT

VM-12(820W)

HAkjr gsoh bysfDV&dYl fyfeVsM
HAksiky
BHARAT HEAVY ELECTRICALS LTD.
BHOPAL

	uke@NAME	gLrk@ SIGN	fnaukd@DATE
cuk;k DRN	SASHI	SASHI	29/12/2003
tWpk CKD	MANI	Sd/-	30/12/2003
vuqksfnr APPD	PATEL	PATEL	10/01/2005

osfj_ dh la[;k NO. OF VAR —

REV.	DATE	
04	30.12.10	ALTD AKHIL / CKD AKHIL / APPD MAK

WEIGHT UPDATED
(DCA-30147)

REV.	DATE	
03	29.12.06	ALTD / CKD / APPD

GALVENISING NOTE ADDED FOR STEEL ITEMS.
BRT.S.FLAT REPLACED BY STR.S.FLAT FOR ITEMS 003&004
(DCA-26523)

REV.	DATE	
02	02.09.05	ALTERED / CHECKED / APPROVED

ITEMS-003 & 004 ADDED
(DCA-26259)

REV.	DATE	
01	02.09.05	ALTERED / CHECKED / APPROVED

ITEM-002 & SHEET-02 ADDED
(DCA-23831)

foHAkx DEPT SWE
dksM CODE 409
vu_ Vky_ uki dh Js.kh UNTOL.DIMS. GR.
vuqlkr SCALE 1:5
HAkj fd_xk-_ WEIGHT (K.G.)
vls_ M&kbZax dk lanHAZ REF. TO ASSY. DRG.
en d-_ ITEM NO.
en_ la[;k NO. OF ITEM 004

'kh"AZ TITLE
EARTHING CONNECTION

vkjs[A d-DRAWING NO.
35216602175

iqu_REV
04

i="B d-SHT. No. 01 i="Bksa dh la[;k NO. OF SHT. 02

35216602175-01-01 REF. DRG. NO.

SIGN. & DATE

INVENTORY NO.

A3

DRG. NO. 35216602175

THE INFORMATION ON THIS DOCUMENT IS THE PROPERTY OF BHARAT HEAVY ELECTRICALS LIMITED
IT MUST NOT BE USED DIRECTLY OR INDIRECTLY IN ANY WAY DETRIMENTAL TO THE INTEREST OF THE COMPANY

NOTE:–

PUNCH DRG.NO. IT. NO./VAR.NO. AT THIS LOCATION

FINISH:–

1–FOR TIN PLATING REFER SG14610 AND ENGG.SPEC./MID TO ITEMS 001 & 002

2–HOT DIP GALVANISED (0.030 TK. MIN.) TO AA 0673608 FOR IT. 003 & 004

FINISHED WEIGHT: ITEM–001–––1.835 Kg
ITEM–002–––2.722 Kg

UNSPECIFIED TOLERANCES SHALL BE :–

FOR SHEARING OF FLATS AS PER AA0230409
FOR MACHINING MEDIUM AA0230208.

AREA OF PLATING:–

FOR ITEM 001 & 004 – 960.5 sq.cm.
FOR ITEM 002 & 003 – 1194.00 sq.cm.

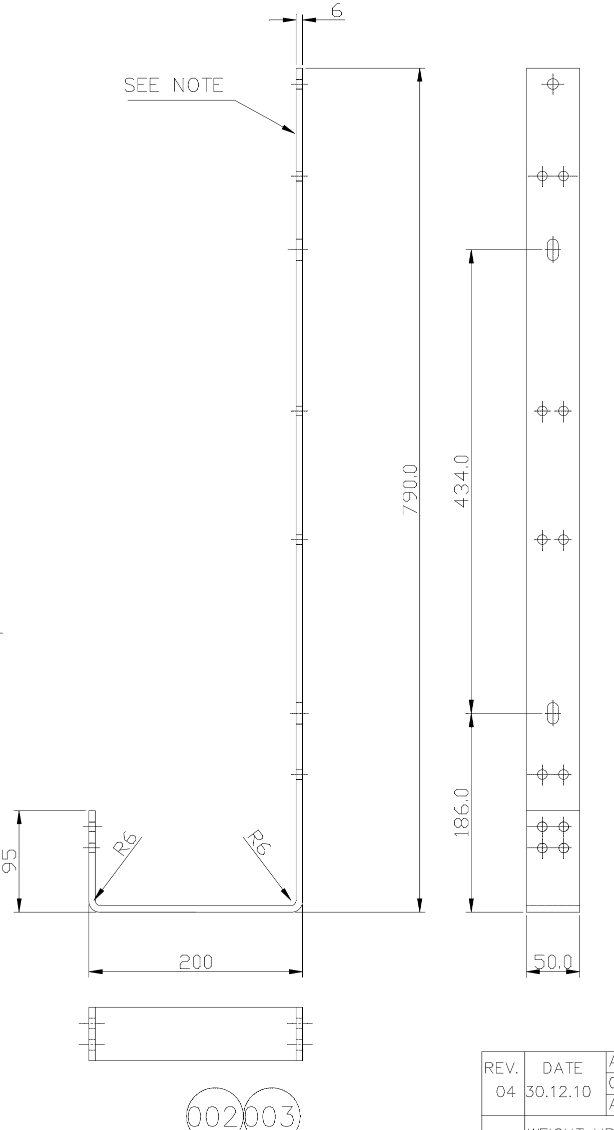

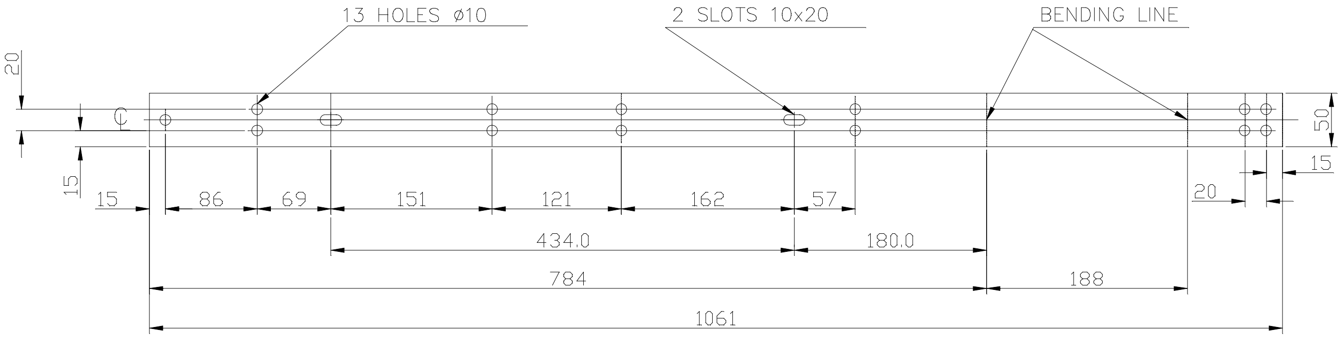

DEVELOPMENT OF IT. 002&003

REV.	DATE	
04	30.12.10	ALTD AKHIL / CKD AKHIL / APPD MAK
		WEIGHT UPDATED (DCA–30147)

ADDITIONAL INFORMATION

STATUS OF DRAWING

DISTRIBUTION OF PRINTS

O.COPY–––––1
SWM––––––––3
TCX––––––––1

mRikn dk i–dkj ;k xk–gd@ifj;kstuk dk uke
TYPE OF PRODUCT OR NAME OF CUSTOMER/PROJECT: VM–12(820W)

HAkjr gsoh bysfDV&dYl fyfeVsM HAksiky
BHARAT HEAVY ELECTRICALS LTD. BHOPAL

	uke@NAME	gLrk@SIGN	fnaukd@DATE
cuk;k DRN	MANI	Sd/–	07/09/2005
tWpk CKD	MANI	Sd/–	07/09/2005
vuqeksfnr APPD			

osfj_ dh la[;k NO. OF VAR

REV.	DATE	ALTERED / CHECKED / APPROVED	DESCRIPTION
03	29.12.06	ALTD / CKD / APPD	GALVENISING NOTE ADDED FOR STEEL ITEMS. BRT.S.FLAT REPLACED BY STR.S.FLAT FOR ITEMS 003&004 (DCA–26523)
02	02.09.05	ALTERED / CHECKED / APPROVED	ITEMS–003 & 004 ADDED (DCA–26259)
01	02.09.05	ALTERED / CHECKED / APPROVED	ITEM–002 & SHEET–02 ADDED (DCA–23831)

foHAkx DEPT SWE
dksM CODE 409
vu_ Vky_ uki dh Js.kh UNTOL.DIMS. GR.
vuqikr SCALE 1:1
HAkj fd_xk–_ WEIGHT (K.G.)
vls_ M&kbZax dk lanHAZ REF. TO ASSY. DRG.
en d–_ ITEM NO.
en_ la[;k NO. OF ITEM

'kh"AZd TITLE: EARTHING CONNECTION

vkjs[A d–DRAWING NO. 35216602175

iqu_@REV 04

i="B d–SHT. No. 02 | i="Bksa dh la[;k NO. OF SHT. 02

REF. DRG. NO. 35216602175–01– 02

SIGN. & DATE

INVENTORY NO.

FIRST ANGLE PROJECTION

(ALL DIMENSIONS ARE IN mm)

DRG. NO. 35216602213

THE INFORMATION ON THIS DOCUMENT IS THE PROPERTY OF BHARAT HEAVY ELECTRICALS LIMITED
IT MUST NOT BE USED DIRECTLY OR INDIRECTLY IN ANY WAY DETRIMENTAL TO THE INTEREST OF THE COMPANY

FINISH: –
EPOXY POLYSTER POWDER COATING TO AA 0674124
FOR SHADE NO. REFER PO/MID. FOR ITEM-001

AREA OF PLATING: –
FOR ITEM 001- 99.500 sq.cm.
FOR ITEM 002- 76.72 sq.cm.

UNSPECIFIED TOLERANCES SHALL BE : –
FOR SHEARING OF FLATS AS PER AA0230409
FOR MACHINING MEDIUM AA0230208.

NOTE: –
PUNCH DRG.NO. IT. NO./VAR.NO. AT THIS LOCATION

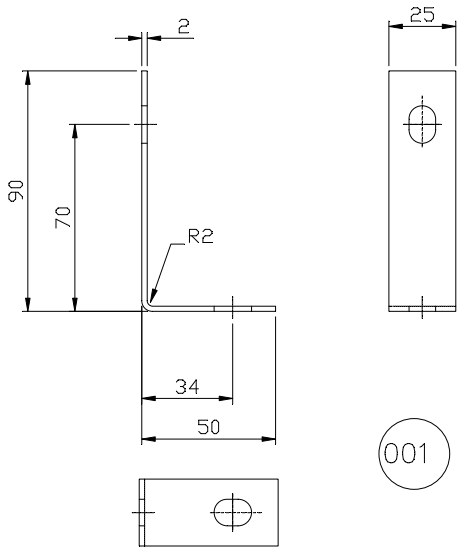

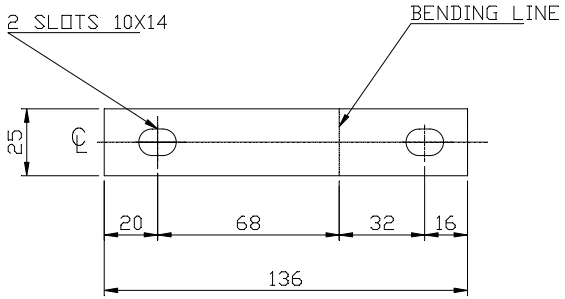

DEVELOPMENT OF IT. 001

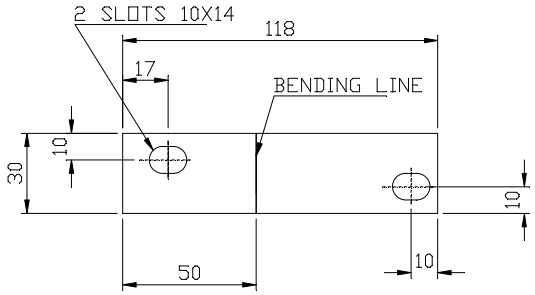

DEVELOPMENT OF IT. 002

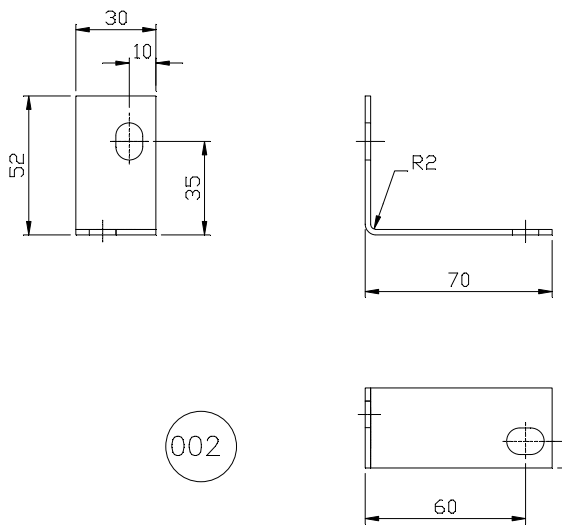

REMARKS	VAR. NO.	ITEM NO.	DESCRIPTION	STD	DRAWING NO.	IT.NO.	MATL. CODE	UNIT	UNIT WT.	GS	ZONE
		002	H.R.C.S. SHEET 2TK X 30X118 LG. H.R.C.S. SHEE			AA1011713110 AA10113	NA	Kg	0.06 001		
		001	H.R.C.S. SHEET 2TK X 25X136 LG. H.R.C.S. SHEE			AA1011713110 AA10113	NA	Kg	0.053 001		

28 → CARD TYPE-3 | 28 → CARD TYPE-1 | 28 → CARD TYPE-2

ADDITIONAL INFORMATION

STATUS OF DRAWING

DISTRIBUTION OF PRINTS
O.COPY-----1
SWM--------3
TCX---------1

mRikn dk i–dkj ;k
xk–gd@ifj;kstuk dk uke
TYPE OF PRODUCT OR
NAME OF CUSTOMER/PROJECT

HAkjr gsoh bysfDV&dYl fyfeVsM
HAksiky
BHARAT HEAVY ELECTRICALS LTD.
BHOPAL

	uke@NAME	gLrk@SIGN	fnaukd@DATE
cuk;k DRN	P.PARE		07/09/2005
tWpk CKD	K.S.MANI		
vuqeksfnr APPD			

osfj_ dh la[;k NO. OF VAR

REV.	DATE	ALTERED / CHECKED / APPROVED
		ALTERED
		CHECKED
		APPROVED

REV.	DATE	ALTERED / CHECKED / APPROVED
01	02.09.08	ALTERED
		CHECKED
		APPROVED

ITEM-002 ADDED.

(CN-27571)

foHAkx DEPT SWE | dksM CODE 409 | vu_ Vky_ ukl dh Js.kh UNTOL.DIMS. GR. | vuqlkr SCALE 1:1 | HAkj fd_xk–_ WEIGHT (K.G.) | vls_ M&kbZax dk lanHAZ REF. TO ASSY. DRG. | en d–_ ITEM NO. | en_ la[;k NO. OF ITEM

'kh"kZ TITLE
SUPPORT–L

vkjs[A d–DRAWING NO.
35216602213

iqu_REV
01

i="B d–SHT. No. 1 | i="Bksa dh la[;k NO. OF SHT. 1

SIGN. & DATE | REF. DRG. NO. 35216602213-01– 1 | INVENTORY NO.

A3

7451/2024/HEP-SWM20900

THE INFORMATION ON THIS DOCUMENT IS THE PROPERTY OF BHARAT HEAVY ELECTRICALS LIMITED. IT MUST NOT BE USED DIRECTLY OR INDIRECTLY IN ANY WAY DETRIMENTAL TO THE INTEREST OF THE COMPANY.

TOOL LIST		
ITEM	TOOL	DESCRIPTION
001	1491433	DRILL PLATE

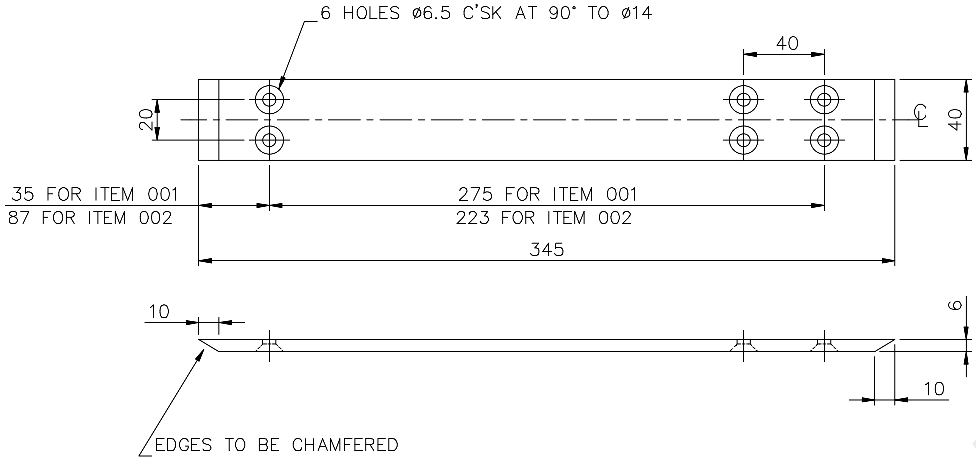

FINISH :– TO BE ELECTROTINNED TO AA0673602 (0.013 TO 0.015 TK.)

STYLE NO. :– BP9049265979 (IT. 001)
BP9049464939 (IT. 002)

Under Revision

VAR00	REMARKS	VAR. NO.	ITEM NO.	DESCRIPTION	STD	DRAWING NO.	IT.NO. / VAR.	MATL. CODE / MATL. SPCN.	CIA	UNIT	UNIT WT. / QTY.	GS	ZONE
			002	- 40X6 TKx345 LG. HARD CPR. STRIP				BP1201903904 / AA12003	NA	Kg	0.739 / 001		
			001	- 40X6 TKx345 LG. HARD CPR. STRIP				BP1201903904 / AA12003	NA	Kg	0.739 / 001		

28 → CARD TYPE–3 28 → CARD TYPE–1 28 → CARD TYPE–2

ADDITIONAL INFORMATION	mRikn dk i–dkj ;k xk–gd@ifj;kstuk dk uke TYPE OF PRODUCT OR NAME OF CUSTOMER/PROJECT: 12 KV MOCB
STATUS OF DRAWING	B
DISTRIBUTION OF PRINTS	O.COPY–––––1 SWM–––––––––3 TCX–––––––––1

HAkjr gsoh bysfDV&dYl fyfeVsM HAksiky
BHARAT HEAVY ELECTRICALS LTD. BHOPAL

	uke@NAME	gLrk@SIGN	fnaukd@DATE
cuk;k DRN	C.M.B.	Sd/–	
tWpk CKD	C.R.K.	Sd/–	03.02.82
vuqeksfnr APPD	S.	Sd/–	

osfj_ dh la[;k NO. OF VAR: –

REV.	DATE	ALTERED / CHECKED / APPROVED	DESCRIPTION
09	04.12.23	SKG / AKHIL / AD	NOTE ADDED FOR CHAMFERING. (DCA NO. 38548)
08	22.04.04	R. RAJORE / H.R.P. / D.K.D.	DRG. COMPUTERISED. (DCA NO. 20127)

foHAkx DEPT	vu_ Vky_ uki dh Js.kh UNTOL.DIMS. GR.	vuqikr SCALE	HAkj fd_xk–_ WEIGHT (K.G.)	vls_ M&kbZax dk lanHAZ REF. TO ASSY. DRG.	en d–_ ITEM NO.	en_ la[;k NO. OF ITEM
SWE	M	1:2.5		IT.002– 35212001853	018	002
dksM CODE 409	AA0230208					

'kh"AZd TITLE: EARTHING STRIP

vkjs[A d– DRAWING NO.: 35092001562 iqu_ REV: 09

i="B d– SHT. No. 01 i="Bksa dh la[;k NO. OF SHT. 01

REF. DRG. NO. 50920\35092001562–R08–S01

SIGN. & DATE

INVENTORY NO.