1822453/2023/HEP-SWM20961

DRG. NO. 3 521 20 01506

NOTES: — 1. SURFACE A–A SHOULD BE AT RIGHT ANGLE TO THE AXIS OF TUBE.
2. ø55 SHOULD BE COCENTRIC WITH ø63 OF TUBE WITHIN ±0.2 MM.

FINISH :— SILVER PLATING (0.013 TO 0.015 TK.) ON SURFACE SHOWN THUS---TO AA0673613.

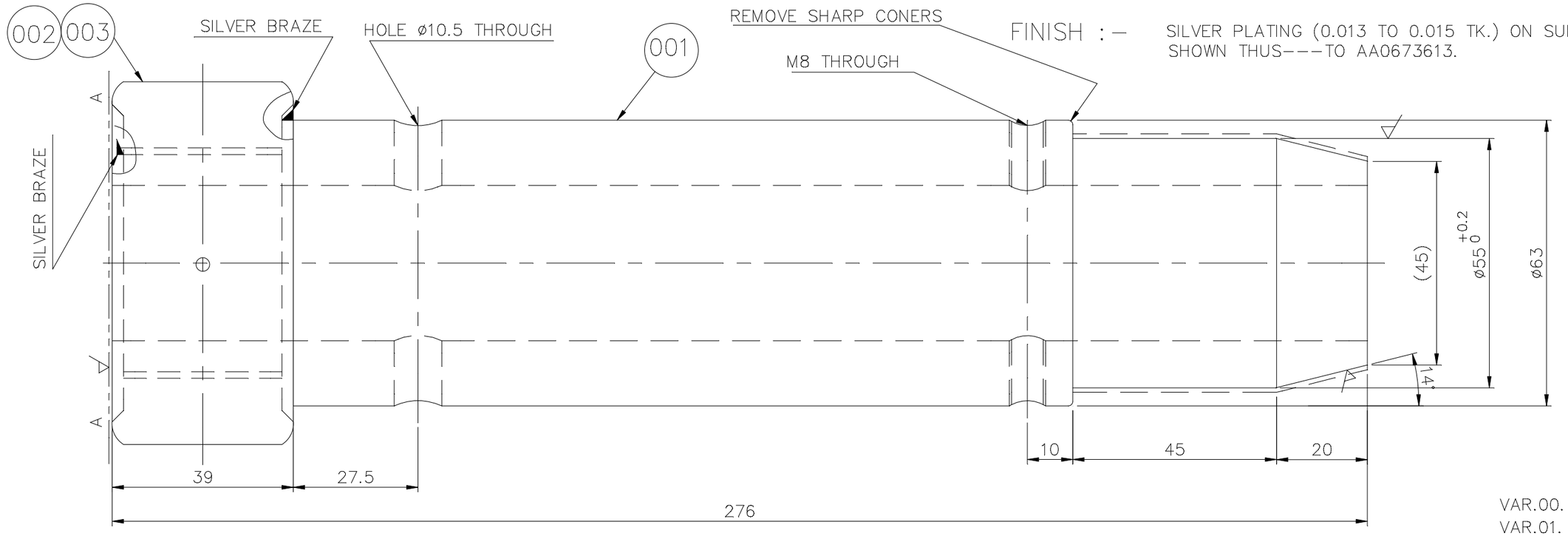

VAR.00 & 01

VAR.00. ST943388
VAR.01. ST943442

VAR01	VAR ☐☐	REMARKS	VAR. NO.	ITEM NO	DESCRIPTION	STD.	DRAWING NO.	IT.NO	MATL. CODE	CA	UNIT	UNIT WT.	G.S.	ZONE
								VAR	MATL. SPECN.			QTY.		
001	—			003	CONTACT ADAPTOR		35212001578	001			Kg.	001		
—	001			002	CONTACT ADAPTOR		35090301501	001			Kg.	001		
001	001			001	CONTACT TUBE		35212001538	001			Kg.	001	—	—

GAUGE LIST

VAR.NO.	GAUGE	DESCRIPTION
VAR.00	1491497	14° TAPER TEMPLATE

ADDITIONAL INFORMATION

STATUS OF DRAWING

DISTRIBUTION OF PRINTS

O.C — 1 TCX — 1
SWM — 3

mRikn dk i–dkj ;k
xk–gd@ifj;kstuk dk uke
TYPE OF PRODUCT OR NAME OF CUSTOMER/PROJECT

VCB (VM 3AF)

बीएचईएल BHEL

HAkjr gsoh bysfDV&dYl fyfeVsM
HAksiky
BHARAT HEAVY ELECTRICALS LTD.
BHOPAL

	uke@NAME	gLrk@SIGN	fnaukd@DATE
cuk;k DRN	STANLEY	Sd/–	22.12.82
tWpk CKD	—		—
vuqeksfnr APPD	RPS/GDG	Sd/–	22.4.83

osfj_ dh la[;k NO. OF VAR: 01

REV.	DATE		
03	8.2.05	ALTERED	
		CHECKED	
		APPROVED	H.R.P.
		DRG. REDRAWN. (DCA NO. 22307)	

REV.	DATE		
02	1.4.85	ALTERED	Sd/–
		CHECKED	Sd/–
		APPROVED	Sd/–
		VAR. 01 ADDED.	

foHAkx DEPT: SWE
dksM CODE: 409
vu_ Vky_ uki dh Js.kh UNT☐L.DIMS. GR.: M AA0230208
vuqikr SCALE: 1:1
HAkj fd_xk–_ WEIGHT (K.G.): —
vls_ M&kbZax dk lanHAZ REF. TO ASSY. DRG.: 05212001503
en d–_ ITEM NO.: —
en_ la[;k NO. OF ITEM: 003

'kh"AZ TITLE: CONTACT ASSY.
1250A/1600A/2000A

vkjs[A d–DRAWING NO.: 3 521 20 01506
iqu_@REV: 03
i="B d–SHT. No. 01
i="Bksa dh la[;k NO. OF SHT. 01

A3

THE INFORMATION ON THIS DOCUMENT IS THE PROPERTY OF BHARAT HEAVY ELECTRICALS LIMITED
IT MUST NOT BE USED DIRECTLY OR INDIRECTLY IN ANY WAY DETRIMENTAL TO THE INTEREST OF THE COMPANY

REF. DRG. NO.
SIGN. & DATE
INVENTORY NO.

1822453/2023/HEP-SWM20961

DRG. NO. 3 521 20 01578

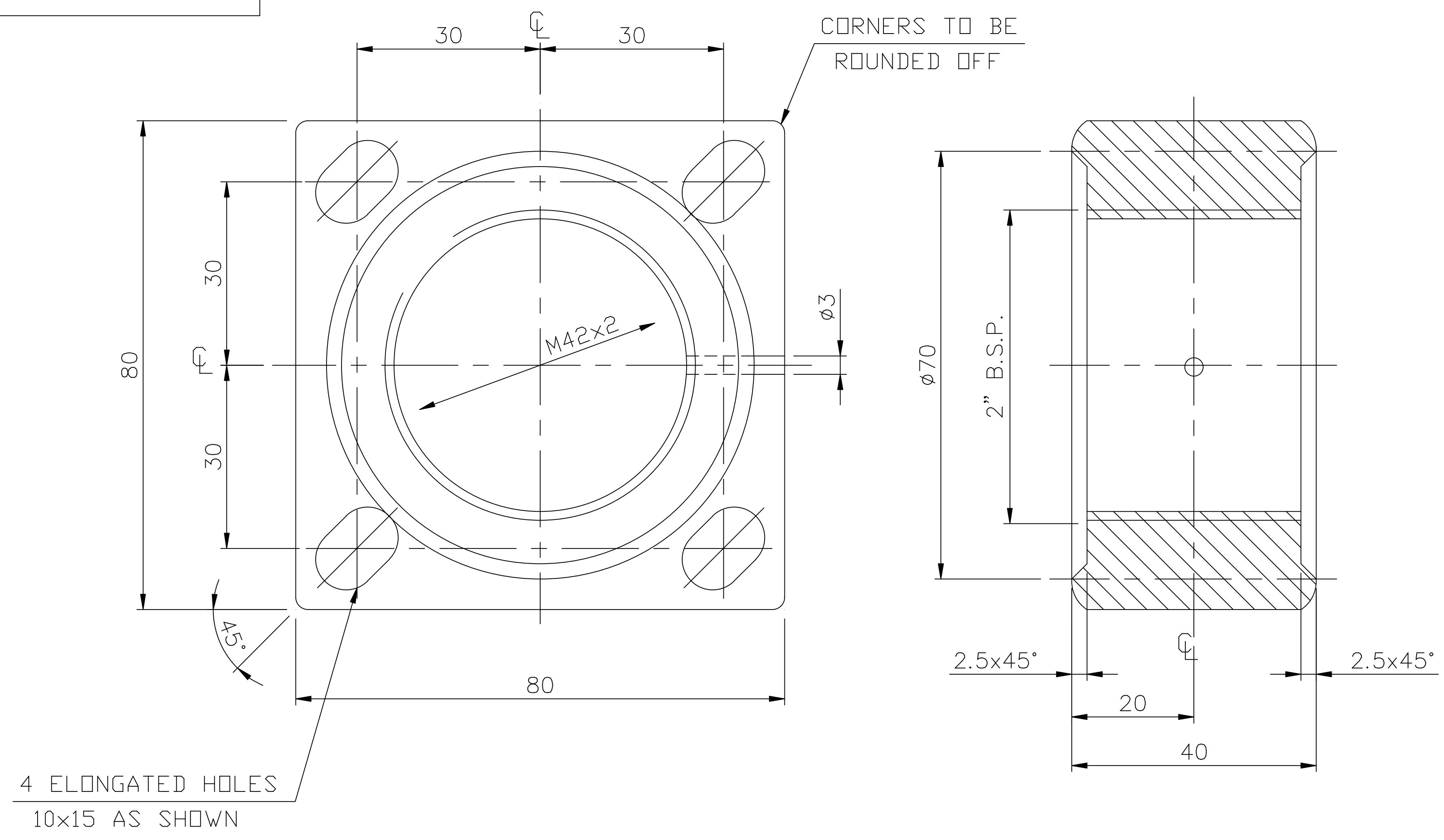

TOOL LIST		
ITEM	TOOL	DESCRIPTION
001	1491425	DRILL JIG

THE INFORMATION ON THIS DOCUMENT IS THE PROPERTY OF BHARAT HEAVY ELECTRICALS LIMITED
IT MUST NOT BE USED DIRECTLY OR INDIRECTLY IN ANY WAY DETRIMENTAL TO THE INTEREST OF THE COMPANY

VAR OO	REMARKS	VAR. NO.	ITEM NO	DESCRIPTION	STD.	DRAWING NO.	IT.NO / VAR	MATL. CODE / MATL. SPECN.	A / C	UNIT	UNIT WT. / QTY.	G.S.	ZONE
	ST943441		001	40TKx80x80 LG. HARD CPR. ROD				AA12003		Kg.	2.250 / 001		

ADDITIONAL INFORMATION

STATUS OF DRAWING

DISTRIBUTION OF PRINTS

O.C – 1 TCX – 1
SWM – 3

mRikn dk i–dkj ;k xk–gd@ifj;kstuk dk uke
TYPE OF PRODUCT OR NAME OF CUSTOMER/PROJECT: 12 KV V.C.B.

HAkjr gsoh bysfDV&dYl fyfeVsM HAksiky
BHARAT HEAVY ELECTRICALS LTD. BHOPAL

	uke@NAME	gLrk@SIGN	fnaukd@DATE
cuk;k DRN	BRM	Sd/–	3.7.84
tWpk CKD	MZG	Sd/–	24.7.84
vuqeksfnr APPD			

osfj_ dh la[;k NO. OF VAR: —

REV.	DATE			
02	3.1.05	ALTERED		
		CHECKED		
		APPROVED	H.R.P.	
		DRG. REDRAWN. (DCA NO. 22250)		
01	26.6.95	ALTERED	Sd/–	
		CHECKED	Sd/–	
		APPROVED	Sd/–	
		DRG. RETRACED MAT. WAS TO PS 12003. (DCA NO. 06910)		

foHAkx DEPT	vu_ Vky_ uki dh Js.kh UNTOL.DIMS. GR.	vuqikr SCALE	HAkj fd_xk– WEIGHT (K.G.)	vls_ M&kbZax dk lanHAZ REF. TO ASSY. DRG.	en d–_ ITEM NO.	en_ la[;k NO. OF ITEM
SWE	M	1:1		35212001506	003	001
dksM CODE 409	AA0230208					

'kh"AZd TITLE: ADAPTOR

vkjs[A d– DRAWING NO.: 3 521 20 01578 — iqu_ REV: 02

i="B d– SHT. No. 01 — i="Bksa dh la[;k NO. OF SHT. 01 — A3

REF. DRG. NO. / SIGN. & DATE / INVENTORY NO.

FIRST ANGLE PROJECTION

(ALL DIMENSIONS ARE IN mm)

DRG. NO. 3 521 20 01538

THE INFORMATION ON THIS DOCUMENT IS THE PROPERTY OF BHARAT HEAVY ELECTRICALS LIMITED
IT MUST NOT BE USED DIRECTLY OR INDIRECTLY IN ANY WAY DETRIMENTAL TO THE INTEREST OF THE COMPANY

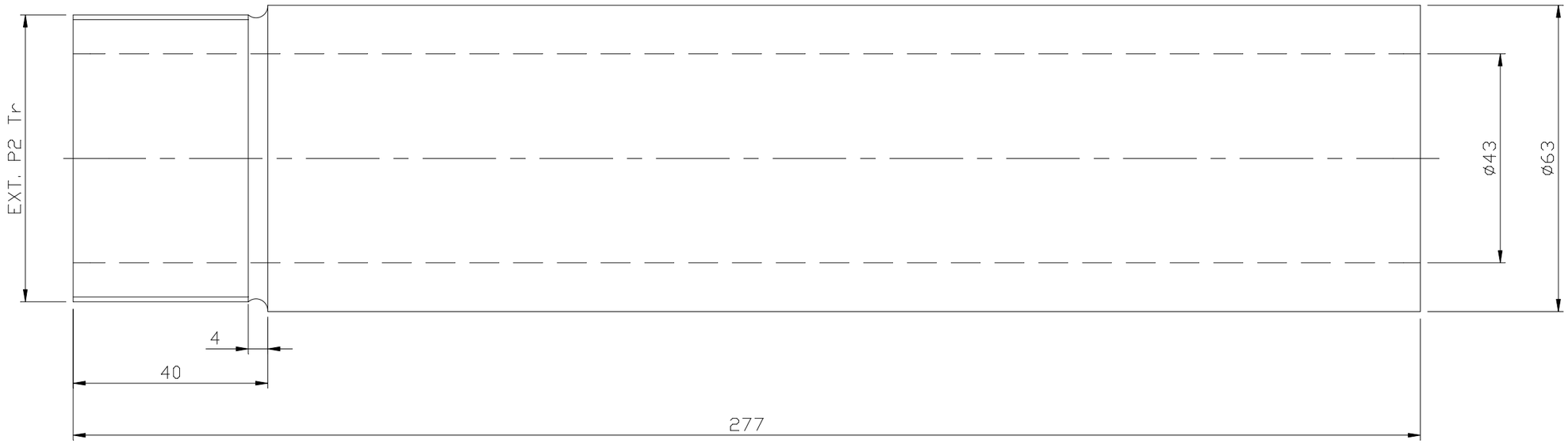

VAR □□	REMARKS	VAR. N□.	ITEM N□	DESCRIPTI□N	STD.	DRAWING N□.	IT.N□ / VAR	MATL. C□DE / MATL. SPECN.	C/A	UNIT	UNIT WT. / QTY.	G.S.	ZONE
	ST943391		001	63 O/D x10TK.x277 TK. COPPER TUBE				AA12082		Kg.	4.140 / 001		

REF. DRG. NO.

SIGN. & DATE

INVENTORY NO.

ADDITIONAL INFORMATION

STATUS OF DRAWING B

DISTRIBUTION OF PRINTS

O.C – 1 TCX – 1

SWM – 3

mRikn dk i–dkj ;k
xk–gd@ifj;kstuk dk uke
TYPE OF PRODUCT OR
NAME OF CUSTOMER/PROJECT

VCB (VM 3AF)

बीएचईएल BHEL

HAkjr gsoh bysfDV&dYl fyfeVsM
HAksiky
BHARAT HEAVY ELECTRICALS LTD.
BHOPAL

cuk;k	uke@NAME	gLrk@ SIGN	fnaukd@DATE	osfj_ dh la[;k NO. OF VAR
DRN	STANLEY	Sd/–	2.4.93	
tWpk CKD	–		–	
vuqeksfnr APPD	RPS	Sd/–	22.4.83	–

REV.	DATE		
03	3.1.05	ALTERED	
		CHECKED	
		APPR□VED	HRP

DRG. REDRAWN.

(DCA NO. 22230)

REV.	DATE		
02	26.6.95	ALTERED	Sd/–
		CHECKED	Sd/–
		APPR□VED	Sd/–

DRG. RETRACED MAT. WAS TO PS12027 & WT.WAS 2.246 KG.

(DCA NO. 06909)

foHAkx DEPT	SWE	vu_ Vky_ uki dh Js.kh UNT□L.DIMS. GR.	vuqikr SCALE	HAkj fd_xk–_ WEIGHT (K.G.)
dksM CODE	409	M AA0230208	1:1	

'kh"AZ TITLE

CONTACT TUBE

vls_ M&kbZax dk lanHAZ REF. T□ ASSY. DRG.: 35212001506

en d–_ ITEM N□.: 001

en_ la[;k NO. OF ITEM: 001

vkjs[A d–DRAWING NO.: 3 521 20 01538

iqu_@REV: 03

i="B d–SHT. No. 01

i="Bksa dh la[;k NO. OF SHT. 01

A3

FIRST ANGLE PROJECTION

(ALL DIMENSIONS ARE IN mm)

1822453/2023/HEP-SWM20961

DRG. NO. 3 509 03 01501

THE INFORMATION ON THIS DOCUMENT IS THE PROPERTY OF BHARAT HEAVY ELECTRICALS LIMITED
IT MUST NOT BE USED DIRECTLY OR INDIRECTLY IN ANY WAY DETRIMENTAL TO THE INTEREST OF THE COMPANY

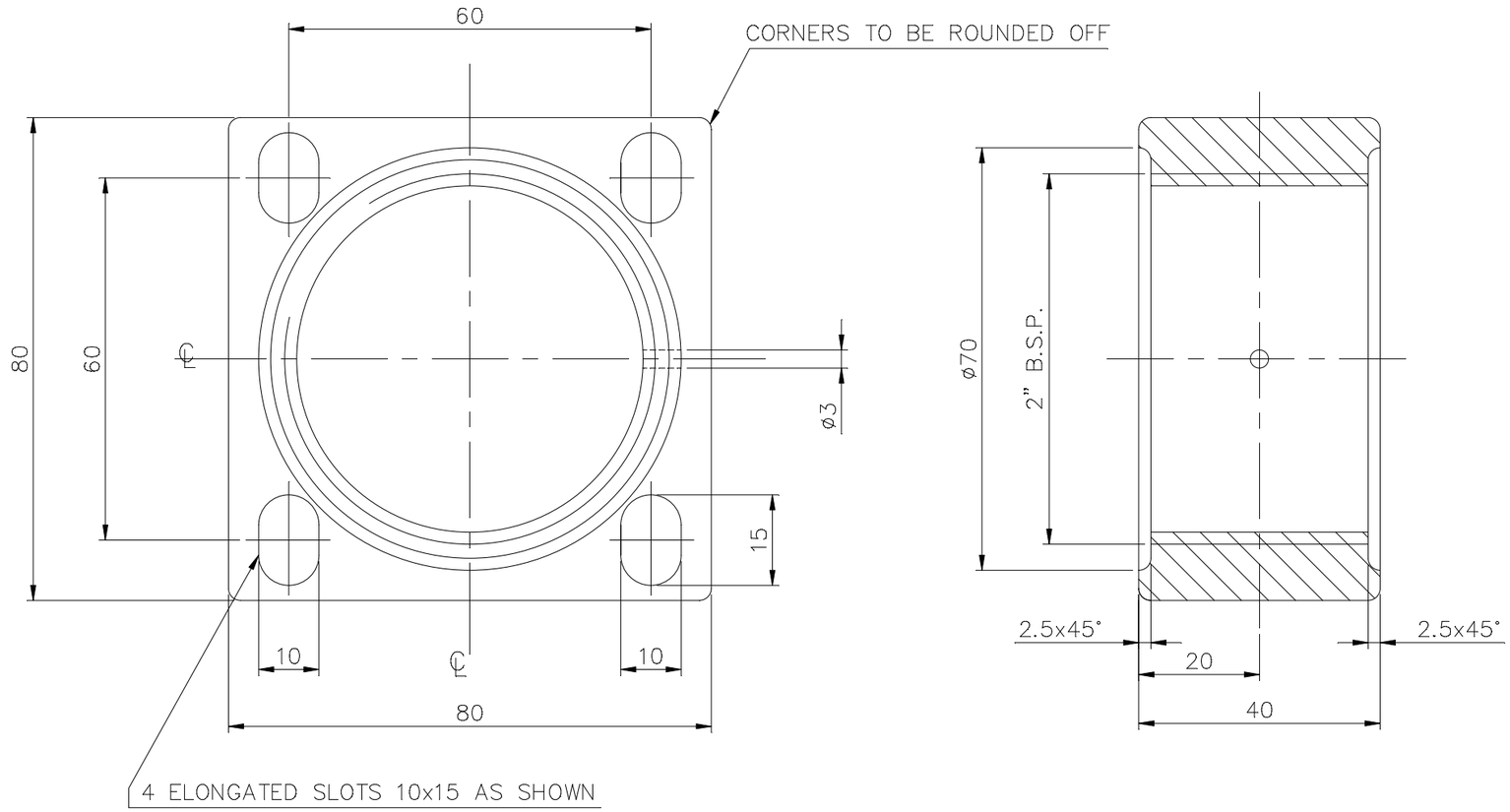

TOOL LIST		
ITEM	TOOL NO.	DESCRIPTION
001	1491425	DRILL JIG

REF. DRG. NO.													
			001	- 80X40 TK X 80 LG HARD CPR. FLA				AA1200323068 / AA12023	NA	Kg	2.1248		
VAR00	REMARKS (65–75)	VAR. NO. (78 79)	ITEM NO. (25 27)	DESCRIPTION (29–58)	STD (59)	DRAWING NO. (60–77)	IT.NO. (29 31) / VAR. (32 33)	MATL. CODE (34–45) / MATL. SPCN. (46–54)	CLA (55)	UNIT (56 57)	UNIT WT. (58–65) / QTY. (68–71)	GS (72)	ZONE

28 → CARD TYPE-3 | 28 → CARD TYPE-1 | 28 → CARD TYPE-2

ADDITIONAL INFORMATION

STATUS OF DRAWING M

DISTRIBUTION OF PRINTS

O.COPY-----1
SWM--------3
TCX--------1

mRikn dk i-dkj ;k
xk-gd@ifj;kstuk dk uke
TYPE OF PRODUCT OR
NAME OF CUSTOMER/PROJECT

12 KV M.O.C.B.

बीएचईएल BHEL

HAkjr gsoh bysfDV&dYl fyfeVsM
HAksiky
BHARAT HEAVY ELECTRICALS LTD.
BHOPAL

	uke@NAME	gLrk@ SIGN	fnaukd@DATE	osfj_ dh la[;k NO. OF VAR
cuk;k DRN	MCA		23.3.78	
tWpk CKD	CRKB		29.6.78	
vuqeksfnr APPD	BPN/RKJ		30.6.78	—

REV.	DATE		REV.	DATE	
03	20.10.05	ALTERED	02	26.6.95	ALTERED Sd/-
		CHECKED			CHECKED Sd/-
		APPROVED HRP			APPROVED Sd/-

INVENTORY NO.

DRG. REDRAWN.

(DCA NO. 24274)

DRG. RETRACED
MAT. WAS TO PS 12003 &
WT. WAS 1.37 Kg.

(DCA 06908)

SIGN. & DATE

foHAkx DEPT	vu_ Vky_ uki dh Js.kh UNTOL.DIMS. GR.		vuqikr SCALE	HAkj fd_xk-_ WEIGHT (K.G.)	vls_ M&kbZax dk lanHAZ REF. TO ASSY. DRG.	en d-_ ITEM NO.	en_ la[;k NO. OF ITEM
SWE	M		1:4	—	25090201500 25090301500	002 002	001
dksM CODE 409	AA0230208						

'kh"AZ TITLE

ADAPTOR

vkjs[A d-DRAWING NO.
3 509 03 01501

iqu_@REV 03

i="B d-SHT. No. 01 | i="Bksa dh la[;k NO. OF SHT. 01

A3