The reproduction, distribution and utilization of this document as well as the communication of its contents to others without express authorization is prohibited. Offenders will be held liable for the payment of damages. All rights reserved in the event of the grant of a patent, utility model or design.
© ISO

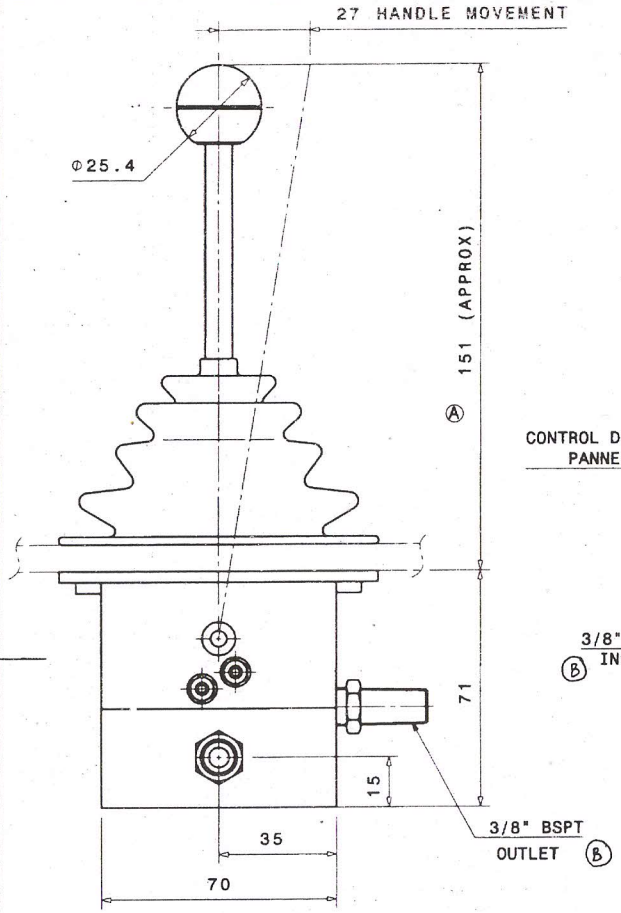

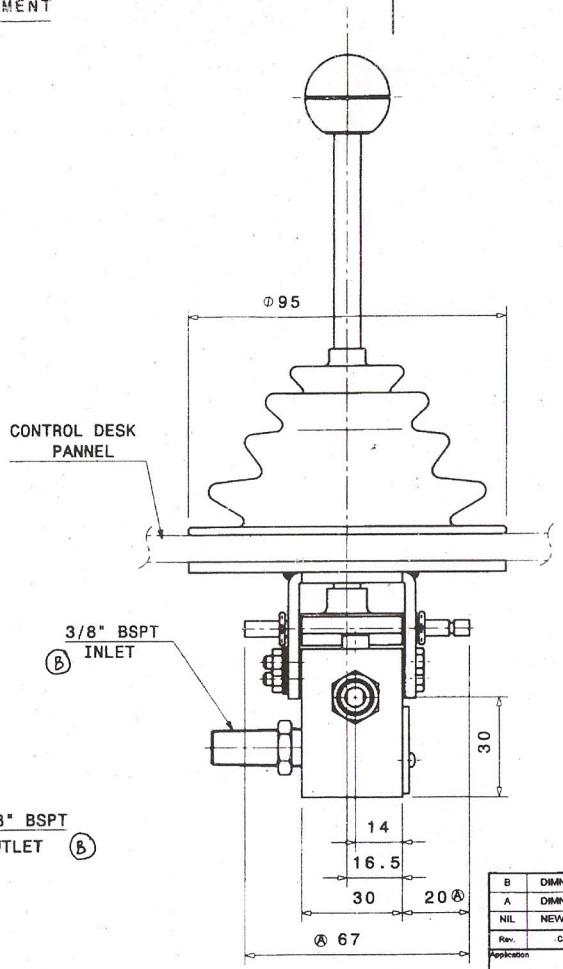

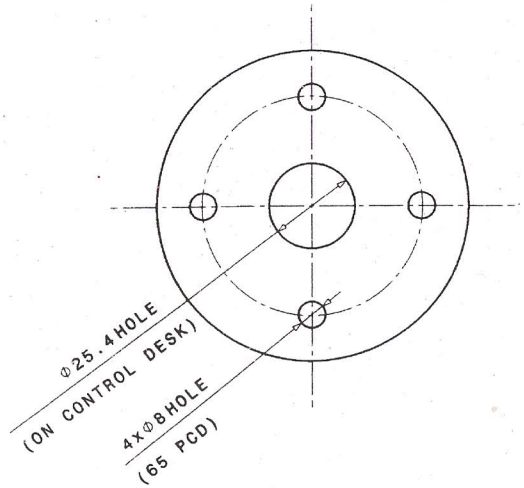

MOUNTING PLATE DETAILS

PART NO: 714 0110 00

Rev.	Change description
B	DIMN. 20 REMOVED, HEX NIPPLES 1/4" BSPP(M)X3/8" BSPP (M) & 1/4" BSPP (M)X3/8" BSW(M) CHANGED TO 1/4"BSPT (M)X3/8"BSPT (M)
A	DIMN.20 & 151 ADDED, DIMN.67 WAS 53, DIMN. 146 REMOVED.
NIL	NEW RELEASE

Rev.	Change	Date	Name	Approved
B	ECO:2411/05	10.02.09	DAK	VC
A	ECO:2411/4	20.11.08	DAK	VC
NIL	ECO:2411	03.07.08	DAK	VC

Application

DRAWING SHALL NOT BE REVISED OUTSIDE CAD SYSTEM

General tolerances: AS PER IS:2102 (c)

Weight kg

Responsible site: HOSUR

Size: A3

BOM

Status: XXXXX

Document Classification

Fire and smoke class

Classification: FC2

Wear piece

Based on

Replacement

Replaced

Customer name

Customer revision indexes

Approved by Customer

Customer reference number

Scale		Date	Name
Prepared	12.02.09	AP	
Checked	12.02.09	DAK	
Approved	12.02.09	VC	

Main title, subtitle: SINGLE OPERATION HORN VALVE (OGA)

Falveley TRANSPORT
FALVELEY TRANSPORT INDIA LIMITED

Drawing identification number: A3 714 0627

Revision: B

Sheet 1 / Sheets 1

A3