1.0 GENERAL

Materials: ASME SA 312 (Austenitic Stainless Steel Pipes), SA 790 (Duplex Stainless Steel Pipes).

1.1 This Technical Delivery Conditions specify the additional requirements for the supply of Austenitic and Duplex Stainless Steel Pipes (Seamless and Welded) to material specification indicated above.

1.2 The pipes shall conform to the size, grade and quantity as specified in the purchase order.

1.3 Seamless pipes shall be supplied unless welded pipe requirement is specified in the purchase order.

2.0 PROCESS AND CHEMICAL ANALYSIS

2.1 The chemical composition of the steel shall conform to the requirements of the respective material specification.

2.2 If the welded pipes are specified in the P.O, then they shall be made by an automatic welding process with no addition of filler metal in the welding operation.

2.3 Product analysis as per material specification shall be furnished in the Test certificate.

3.0 DIMENSIONAL TOLERANCES

The pipes shall conform to the dimensional tolerances specified in ASTM A999.

4.0 HEAT TREATMENT

All pipes shall be supplied in the heat treated condition as specified in the respective material specification.

5.0 MECHANICAL TEST

5.1 The pipes shall be subjected to mechanical tests as specified in material specification and report shall be furnished.

5.2 The number of test samples shall be selected as per respective material specification.

6.0 HARDNESS TEST FOR DUPLEX SS PIPES

Hardness test shall be carried out on each pipe in case of SA 790 duplex Stainless Steel. The hardness values shall be indicated in test certificate.

7.0 HYDROSTATIC PRESSURE TEST

Each length of pipe shall be subjected to hydrostatic pressure test, at a pressure as specified in the purchase order.

8.0 FINISH & REPAIR

The Inside & outside surfaces of the pipes shall be free from any imperfections & defects like laps, seams, folds, cracks, pitting etc;. Repair by welding is prohibited. Localised imperfections, if any, may be removed mechanically ensuring the wall thickness. Local depressions or ground spots are not acceptable.

Prepared by : Vivekananda Yellu		
Approved by: Vedaprasad K Quality	K. Ganeshan OP&C and MPL	Venkataramani.G Engineering & Quality

The pipe shall meet the dimensional tolerance (clause 3.0 above) after any mechanical repair as permitted in the standard.

All pipes shall have a finish as specified in respective material specification.

9.0 MARKING AND PACKING

The following details are to be marked on the consignment for identification

1) PO Number 2) Supplier's emblem/code 3) Specification & grade
4) Heat number 5) Size 6) Inspector's seal

OD up to 31.8 mm (excluding)	Details 1 to 6 shall be stamped on metal / plastic tag attached to bundle
OD 31.8 mm to OD 76.1mm (including)	• Details 1 to 5 shall be paint stencilled on each pipe. • Details1 to 6 to be stamped on Metal / Plastic tag attached to bundle.
OD above 76.1 mm	• Details 2 to 6 shall be hard stamped / engraved at 100mm from an end of each pipe. • Details 1 to 5 shall be paint stencilled on each pipe.

9.1 The Pipes dispatched directly to project site as **DTS** shall be punched and paint stenciled with DU code (14 digit work order du detail-) as given by purchase in addition to marking done as per para 9.0.

10.0 COLOUR CODING : All pipes shall be colour coded longitudinally to full length of the pipe as given below.

SA312 TP304 : Blue & Yellow.
SA312 TP304H : Black, Blue & Yellow.
SA312 TP316 : Black & Green.
SA312 TP316L : Black, Blue & Brown.
SA312 TP321 : Blue & Brown.
SA312 TP347 : Blue, Red & White.
SA790 UNS S32205 : Red , White & Green

11.0 PRESERVATION & END PROTECTION

All Pipes shall be surface treated as per ASTM A380 both inside and outside. Pipe ends shall be machined as per PO and shall be secured with caps.

12.0 INSPECTION & CERTIFICATION

12.1 All pipes shall be inspected and test certificates shall be countersigned by BHEL/BHEL approved inspection agency.

Prepared by :		
Vivekananda Yellu		
Approved by:		
Vedaprasad K Quality	K. Ganeshan OP&C and MPL	Venkataramani.G Engineering & Quality

12.2 Test Certificate shall include BHEL PO no., TDC no., Pipe size and quantity- melt wise, specification and grade with year of code, Heat no., Steel &Pipe making process, Product analysis, Heat treatment details with actual temperature and soaking time, Mechanical test results and hydrostatic test pressure and results.

13.0 RECORDS OF REVISIONS

Rev 02 – New material specification (SA 790 UNS S32205) and Para 6.0 are included. Also minor corrections made for better clarity.

Rev 03 – Para 8.0, 9.1, 10.0 & 11.0 are revised.

** ** ** ** ** ** **

Prepared by :		
Vivekananda Yellu		
Approved by:		
Vedaprasad K Quality	K. Ganeshan OP&C and MPL	Venkataramani.G Engineering & Quality

ALL DIMENSIONS ARE IN MILLIMETRES. FOR TOLERANCES OF UNTOLERANCED DIMENSIONS DURING MANUFACTURE REFER RELEVANT QCP / QP.

DRAWING NO: 3-V-0000-35372

SL.No	DRAWING No.	MATERIAL	MATL. CODE	SIZE	L	WEIGHT IN Kgs.	SIZE RATING	MATL. MARK*
01	3-V-M959-35372	ASTM A193 B7, PROD. ATTEST	96 465 930 0000	1/2"-13UNC-2A	80	0.08	2"-C150 2"-C300	B7
02	3-V-M961-35372		96 465 932 0000	5/8"-11UNC-2A	105	0.16	4"-C300	B7
03	3-V-M962-35372		96 465 931 0000	3/4"-10UNC-2A	133	0.30	8"-C300	B7
04	3-V-M958-35372		96 465 952 0000	5/8"-11UNC-2A	86	0.134	2"-C150	B7
05	3-V-NN01-35372		96 465 943 0000	5/8"-11UNC-2A	115	0.175	4"-C150	B7
06	3-V-M966-35372	ASTM A193 B8M Cl.2, PROD. ATTEST	96 465 953 0000	1/2"-13UNC-2A	80	0.08	6"-C150	B8MSH
07	3-V-M967-35372		96 465 959 0000	5/8"-11UNC-2A	86	0.134	3"-C150	B8MSH
08	3-V-M968-35372		96 465 960 0000	3/4"-10UNC-2A	120	0.26	6"-C150	B8MSH

12.5 3.2

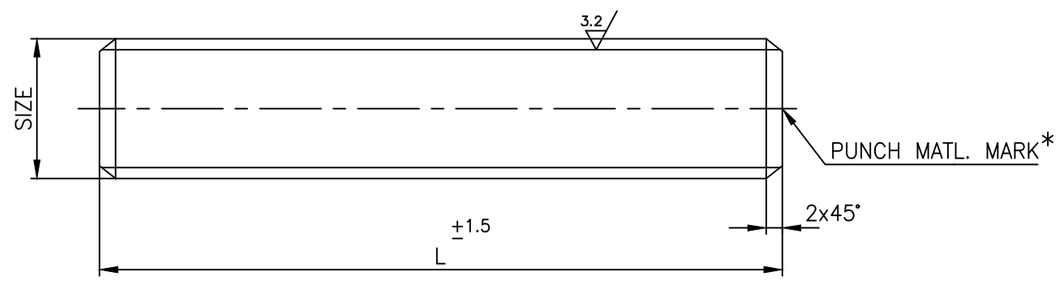

NOTE:-

FOR QUALITY REQUIREMENTS REFER LATEST APPLICABLE TDC

NO OFF	DESCRIPTION	MATL CODE	MATL SPECN	HEAT TREATMENT	SCRAP SORT	NET WT (kg)	GROSS WT (kg)	DRAWING No. / COMP. CODE	ITEM No

TYPE OF PRODUCT
OR NAME OF
CUSTOMER/PROJECT

BHARAT HEAVY ELECTRICALS LTD.,
UNIT: HIGH PRESSURE BOILER PLANT.
TIRUCHIRAPALLI-620014.
365-191
02.03.2021

	NAME	SIGN	DATE	NO.OF VAR.
DRN	R.P.SINGH		20.01.21	—
CHD	SAMEER BHAT		20.01.21	
APPD	S.SATHEES		20.01.21	

DEPT VL
CODE 320
SCALE NTS
WEIGHT (KG). –
REFERENCE INFORMATIONS
NO. OF ITEMS —

TITLE STUD
CARD CODE U 01
DRAWING NO. 3-V-0000-35372
REV 02

DCP No.	ALTD: TS	APPD: SSK
–	CHD: RPS	DT: 20.05.22

REV 02 — SL. NO. 06 TO 08 INCLUDED.
ZONE –

DCP No.	ALTD: RPS	APPD: SSK
–	CHD: SAB	DT: 11.08.21

REV 01 — SL. No. 04 & 05 INCLUDED
ZONE –

CAUTION: The information on this document is the property of BHARAT HEAVY ELECTRICALS LTD. It must not be used directly or indirectly in any way detrimental to the interest of the company.

Size A3

भारत हैवी इलेक्ट्रिकल्स लिमिटेड
(भारत सरकार का उपक्रम)
इंडस्ट्रियल वाल्वस प्लॉट
Bharat Heavy Electricals Limited
(A Govt. of India Undertaking)
Industrial Valves Plant

Quality Assurance Plan for Fasteners*:
NUT, BOLT (INCL EYE BOLT, LIFTING EYE BOLT), STUD

BHE:QAP:FAS:02
Dt:15.03.2019

SN	Stage of inspection	Inspection type		Ref doc	Quantum of check	Format of Record	Agency	
							M	BHEL/TPIA
1	Raw material	Chemical/Mechanical properties		Material test certificate	100%	MTC report	V	V
2	Finished product	Chemical Analysis	Chemical composition	Material specification in drg	one sample per heat	Annex 1 of TDC	P	W
		Mechanical Properties	Tensile strength	Material specification in drg	one sample per heat	Annex 1 of TDC	P	W
			Mechanical testing for nut		10% or 20 nos hardness check at manufacturer end, one sample each type per heat for TPIA or BHEL**			
			Hardness					
		Dimension	As per drawing, Thread with GO/ NO GO Gauge	Material drg/BPS	10% or 20 nos/type.	Inspection report	P	P
		Visual	Free from burrs, physical damages		100%	Annex 1 of TDC	P	P
		MPI	ASTM E709	As per procedure	10% or 20 nos/type.	MPI report	P	W
		Marking/Identification	Material grade/supplier name or symbol	As per PO/Drawing/TDC	10%	Annex 1 of TDC	P	W

15/03/19 (Nikhil Kumar)

15/03/19 (Samir Sh)

15/03/19 S. R. Kanny

433, इंडस्ट्रियल काम्पलैक्स, गोइन्दवाल 143423 (जिला अमृतसर) पंजाब 433, Industrial Complex, Goindwal 143423 (Distt. Amritsar) Punja
TELEPHONE : 01859-222002, 036, 039, 041, FAX : 01859-222061

भारत हैवी इलेक्ट्रिकल्स लिमिटेड
(भारत सरकार का उपक्रम)
इंडस्ट्रियल वाल्वस प्लाँट
Bharat Heavy Electricals Limited
(A Govt. of India Undertaking)
Industrial Valves Plant

3		Rust preventive oil		As per TDC:5:164	100%	Annex 1 of TDC	P	W
		Packing	Packed in wooden/cardboard box with layer to layer cushioning material.		10%	Annex 1 of TDC	P	W
		Test certificate	MTC	.		Annex 1 of TDC	P	V

M-Manufacturer, V-Verification, W-Witness, P-Perform

- * QAP IS PREPARED TO MEET REQUIREMENT OF TDC:5:164 (latest),.PLS REFER IT, IN CASE OF AMBIGUITY ARISES.
- ** TPIA/BHEL MAY INCREASE SAMPLE QTY UP TO 10%.

15/03/19	15/03/19	15/03/19
Vikas Kumar Sr. Engr / QM	Samir Shandilya Sr Mgr/ QM &HSE	S R Kenny AGM/QM, HSE, Engg,TEC & SM)
Prepared	Reviewed	Approved

433, इंडस्ट्रियल काम्पलैक्स, गोइन्दवाल 143423 (जिला अमृतसर) पंजाब 433, Industrial Complex, Goindwal 143423 (Distt. Amritsar) Punja
TELEPHONE : 01859-222002, 036, 039, 041, FAX : 01859-222061

Revision Record: 00: 17.01.90: First issue. Rev: 01:21.06.90 Editorial corrections. Rev 02:21.04.91 TC for studs/bolts added. Rev 03: 04.04.96: Annexure I amended. Cl 3.3.3 & 5.3 modified. Rev 04:20.10.96: NDT, Acid pickling added & re-written. Rev 05: 28.04.98: Cl 3 modified to include MPI, certificate modified & Cl 7.4 deleted. Rev 06:15.06.99: Title, Cl 1 to 5 & 7.1 modified. Cl 7.2 changed to Cl 7.3. Cl 7.3 changed to 7.4 and modified. Cl 7.2 Galvanizing added. Test certificate sample format modified.
Rev 07: 15/06/2017: TDC: 5:166 for CS & AS Nuts has been merged with this TDC. Totally revised in line with changed requirements and Xylan coating requirements added.
Rev 08: 14/09/2019: Cl 1.0, 2.0, 3.0, 4.0, 5.0 modified in line with API 6A 21st Ed 2018 Errata 1 and for better clarity.
Rev.09: 19/02/2021: Latest version of the referred Standards/Specifications indicated thoughtout TDC; Cl.2.0 iid added; Cl.4.1 added; Annexure-1 modified;

1.0 MATERIAL SPECIFICATIONS:

All the codes, standards, specifications, drawings & procedures, etc., referred in this TDC shall be of latest revision as on the date of Purchase Order, unless specified otherwise.

Studs/Bolts - Alloy Steel	:	ASME SA 193-*19* /ASTM A 193-*20* Gr B7, B7M & B16.
Nuts - Carbon Steel	:	ASME SA 194-*19* /ASTM A 194-*20A* Gr 2H & 2HM
Alloy Steel	:	ASME SA 194-*19* /ASTM A 194-*20A* Gr 4 & 7
Additional Requirements	:	As listed below (Supplementary to the above material specifications)
Size and Quantity	:	As per Purchase Order (PO) & Applicable Drawing

2.0 GENERAL REQUIREMENTS:

i. This TDC is applicable for Valves, OFE (API 6A 21st Ed 2018 Errata 3 Addendum 1 & API 16C 2nd Ed 2015 Addendum 1 Errata 4) and other applications including NACE MR0175 / ISO 15156:2015 Parts 1, 2 & 3. The products shall be manufactured to the relevant requirements specified in the applicable drawings, specifications, PO & this TDC.

ii. Studs / Bolts / Nuts used for OFE application:

a. Studs / Bolts / Nuts shall be qualified and manufactured in accordance with BSL 1 of API 20E. The qualification & requalification records as per API 20E *Ed 2017 Addendum 2* shall be maintained by the Supplier. The supplier shall prepare Manufacturing Process Specification(MPS) to include as a minimum allowable levels for all Studs/Bolts/Nuts manufacturing parameters including process control variables and heat treatment parameters as per API 20E *Ed 2017 Addendum 2* and this TDC.

b. Raw material shall be fully wrought. Reduction ratio based on starting material diameter shall be a minimum of 4:1. The steel shall conform to the respective material specifications. Intentional addition of Boron is not allowed. All elements intentionally added to the heat shall be reported in the Test Certificate.

c. Furnace calibration shall be in accordance with API 6A *21st Ed 2018* Annex M; SAE AMS 2750 *Rev.F*; or SAE AMS H6875 *Rev.C*. For induction or direct resistant heat treatment, calibration shall be in accordance with manufacturer's written procedure. For forging furnaces, calibration shall be in accordance with manufacturer's written procedure

d. Heat lot:
- *Batch furnace: bolting or raw material of a single heat and diameter, heat treated together as a single austenitizing, quenching, tempering, and stress-relieving charge.*
- *Continuous furnace: bolting or raw material of a single heat and diameter heat treated without interruption in a continuous charge*

iii. Nuts shall be hot/cold forged or manufactured from hot rolled/cold drawn bars. If made from

hexagonal bars, 100% MT is to be done on bars as per ASTM E709-*15* to ensure freedom from surface/sub-surface defects.

iv. Hot rolled & cold drawn bars, if used (for studs/bolts or nuts), shall be machined at least 2 mm (minimum) in radius (i.e. 4 mm in diameter) to remove the seams completely. After machining, at least 10% of the bars shall be tested by MPI as per ASTM E709-*15* to ensure freedom from surface/sub-surface defects.

v. Heat treatment of finished studs/bolts shall be carried as per the material specification requirements for corresponding grades. For heat treatment of finished components, salt bath or controlled atmosphere furnace shall be used. After heat treatment, the threads shall be thoroughly cleaned to remove all deposits. If acid pickling is done for cleaning, it shall be as per Cl. 6 (v) of this TDC.

vi. Cadmium Plating (Cl 6 (i) of this TDC), Electroplating (Cl 6 (ii) of this TDC) and/or Xylan Coating (Cl 6 (iii) of this TDC) shall be done on the fasteners if specified in Drawing/PO. For all other cases, rust preventive coating (Cl 6 (iv) of this TDC) shall be done.

3.0 CHEMICAL, MECHANICAL PROPERTIES & NDE:

i. Mill certificate from steel manufacturer for conformance to chemistry heat-wise shall be submitted. Additionally, product analysis shall be done on one sample/heat by the stud/bolt/nut manufacturer. Methods and practices for chemical analysis shall be in accordance with ASTM A 751-*20*.

ii. The microstructure and macrostructure shall conform to the requirements of the respective material specifications.

iii. **Tensile Testing for Studs/Bolts:** One tensile test/heat/size/ HT batch shall be carried out in the finished heat treated condition as per SA / A 193 and shall meet the material specification requirements for corresponding grades.

iv. Hardness Testing for Studs/Bolts:

Hardness testing, including specimen preparation, shall be performed in accordance with ASTM A 370-*20* including Annex A3, except that testing shall also be in conformance with ASTM E10-*18* or ASTM E18-*20*.

a) **For ASME SA 193-*19* / ASTM A 193-*20* Gr B7 & B16:** Hardness check shall be carried out on finished stud/ bolt as per ASME SA 193-*19* / ASTM A 193-*20*, at least on 10% of the finished studs/bolts.
Gr B7: Hardness: 25 to 34 HRC or 253 to 319 HBW.
Gr B16: Hardness: 25 to 35 HRC or 253 to 321 HBW.

b) **For ASME SA 193-*19* / ASTM A 193-*20* Gr B7M:**
Hardness check on 100% of studs/bolts as per SA193.
Gr B7M: Hardness: 94 to 99 HRB or 201 to 235 HBW.

v. Mechanical Testing for Nuts:

a) **For ASME SA 194-*19* / ASTM A 194-*20A* Gr 2H, Gr 4, & Gr 7:**
Hardness check on finished nuts shall be as per ASME SA 194-*19* / ASTM A 194-*20A* (including quantum of testing).
Gr 4: Hardness: 24 to 35 HRC or 248 to 327 HBW.
Gr 2H & Gr 7: Hardness: 24 to 34 HRC or 248 to 319 HBW.

b) **For ASME SA 194-*19* / ASTM A 194-*20A* Gr 2HM:**
Hardness check on 100% of finished nuts shall be carried out as per ASME SA 194-*19* /

ASTM A 194-*20A*.
Gr 2HM: Hardness: 159 to 235 HBW.

c) **Proof load test shall be done as per ASME SA 194-*19* / ASTM A 194-*20A* for all grades of nuts** and shall meet the requirements of corresponding grades of the material specification.

d) After final heat treatment, sample nuts shall be heat treated as per Table 1 and meet the corresponding hardness requirements.

Table 1.

Grade	Temperature (°C)	Soaking Time (Hr)	Cooling	Minimum Hardness (HBW) at room temperature
2H	540	24	Slow Cool	179
2HM	540	24	Slow Cool	159
4, 7	590	24	Slow Cool	201

e) **Cone Stripping Test:** This test shall be performed as per ASME SA 194-*19* / ASTM A 194-*20A* in case of visible surface discontinuities. On such cases Proof load shall be as per ASME SA 194-*19* / ASTM A 194-*20A*.

vi. **NDE:**
Magnetic particle inspection shall be carried out as per ASTM E709-*15* in at least 10% of the finished studs/bolts of all grades. Cracks, linear indications (length ≥ 3 times its width) are unacceptable.

4.0 SAMPLING INSPECTION:

All inspection shall be in accordance with relevant drawing or BPS (Boiler Plant Standard), PO, this TDC and ASME SA 193-*19* / ASTM A 193-*20* for studs/bolts and ASME SA 194-*20* / ASTM A 194-*20A* for nuts. The threads shall be checked with calibrated ring gauges for studs/bolts & plug gauges for nuts in the final heat treated condition for black variety and *prior to* final plated/coated condition for the cadmium plated/electroplated/ xylan coated items.

Visual, dimensional checks and their acceptance shall be as per applicable drawing and ASME SA 193-*19* / ASTM A 193-*20* for studs/bolts & ASME SA 194-*20* / ASTM A 194-*20A* for nuts.

4.1 *Gauging Requirements for Xylan along with Zinc Coated Fasteners*

i. Studs
- *a. No under sizing is allowed*
- *b. Prior to Xylan and Zinc Coating, Class 2A Gauge to be used for inspection*
- *c. After coating, No Gauge inspection is required*

ii. Nut
- *a. Under sizing is allowed to maximum of 0.2mm in the internal diameter of threads*
- *b. Prior to under sizing, Class 2B Gauge to be used for inspection*
- *c. After under sizing, a gauge having an allowance as per Class 2B along with 0.2mm under sizing allowance to be made and inspected thereof*

iii. Assembly of Stud and Nut
- *a. Free run of nut over stud to be ensured*
- *b. No play is allowed*
- *c. After free run of nut over stud, Xylan coating should not get peeled off.*

5.0 MARKING & PACKING:

i. Punch/emboss each finished component with applicable material grade (B7/ B7M/ B16 for studs/bolts; 2H/2HM/4/7 for nuts) and supplier's emblem. Studs/bolts of grade B7M and nuts of Gr 2HM shall have a line under the grade symbol.

ii. Punch/emboss serial number also in B7M studs/bolts and Gr 2HM nuts in addition to the above, to correlate with hardness. Protect the threaded ends with plastic end caps. Pack in wooden

box/ gunny bag of convenient size for easy handling and transportation. Mark quantity in each box/gunny bag.

iii. In addition to the above, studs / Bolts / Nuts for OFE applications shall marked with unique heat lot identification and followed by "20E1". Each piece 1 in. nominal diameter and larger shall be marked. For studs / Bolts / Nuts less than 1 in. nominal diameter, the studs / Bolts / Nuts shall be securely containerized to maintain heat lot identification and traceability. Multiple heat lots shall not be mixed in a single container. Containers used in the processing, storing, and shipping of studs / Bolts / Nuts not individually marked shall be clearly labeled with all marking information required by the relevant material specifications and API 20E *Ed 2017 Addendum 2.*

6.0 SPECIAL REQUIREMENTS:

i. CADMIUM PLATING:

a) Clean the fasteners to make them free from rust, grease, oil, scale, etc., before plating. When pickling is considered essential, it shall be done as per Cl 6 (v) of this TDC.
b) Apply Cadmium Plating to the specified thickness on specified areas. Thickness shall be measured on 5% of the PO quantity of fasteners.
c) After plating, bake the parts at 175^{0}C to 205^{0}C for a minimum period of 3 hours. The elapsed time between plating and baking shall not exceed 8 hours.
d) Apply a Chromate Conversion coating after plating and baking.

ii. ELECTROPLATING OF ZINC CHROMATE:

a) Clean the fasteners to make them free from rust, grease, oil, scale, etc., by suitable organic solvents/ hand tool methods before electroplating. Then, pickling shall be done as per Cl 6 (v) of this TDC.
b) The fasteners shall then be electroplated as per the method and to the minimum coating thickness specified in the applicable drawing. Thickness shall be measured on 5% of the PO quantity of fasteners.
c) All electroplated parts (regardless of strength level) shall be baked within 2 hours after plating at 375 °F–425 °F (191 °C–218 °C) for 8 hours minimum at temperature

iii. XYLAN COATING:

a) Clean the fasteners by blast cleaning to Sa2.5 to make them free from rust, grease, oil, scales, etc., before xylan coating.
b) The fasteners shall then be xylan coated as per the requirements and to the minimum coating thickness specified in the applicable drawing.
c) **Tests for Xylan Coating:**
The following test shall be carried out on Xylan coated fasteners and results to be reported in the Test certificate (in addition to the Test Certificate for the fastener material and other inspections requirements):

i) **Thickness measurement:**
Dry film thickness of Xylan coating to be measured using a magnetic induction or Eddy current type electronic gauge and the reading shall meet the drawing/PO requirement for thickness of coating of Xylan 1070. The thickness measurements shall be made in accordance with ASTM D7091-*20*. Thickness shall be measured on 5% of the PO quantity of fasteners.

ii) **Cure Test:**
This test method is for ensuring the completeness of cure of Xylan 1070 coating by evaluating the resistance of the cured coating to a solvent known to attack uncured film. The testing method shall be as per Whitford test method 115B (as recommended by the Xylan coating supplier).
Acceptance criteria: No white precipitate or stain shall be available after the test.

iii) **Adhesion Test using Cross-hatch and Cello Tape:**

Test as per ASTM D3359-*17* Method B for measuring Adhesion by Tape Test.
Acceptance Criteria: No loss of adhesion (5B Classification).

iv) **Salt Spray Test:**
Xylan coated fasteners should pass a minimum requirement of 500 hours of salt spray test as per ASTM B117-*19*. Certificate of compliance for meeting the salt spray test requirements shall be provided.

iv. RUST PREVENTIVE FLUIDS/COATING REQUIREMENTS:

a) Clean the fasteners to make them free from rust, grease, oil, scale, etc., by hand tool/ manual cleaning method.

b) Apply one coat of rust preventive fluid, of any of the following brands of the suppliers (Table 2), to obtain dry film thickness of 20 microns minimum:

Table 2. Rust Preventive Fluid/Coatings Brands

Sl No	Brand/Chemical	Supplier Name and Address
1	BONITA-RPF	M/s Bonita Chemicals, 64, Industrial Estate, Nunhai, Agra-282 006
2	CHAMPION-RPF	M/s Guardian Chemicals, 8, Rajaji IInd st, West Lake Area, Nungambakkam, Madras-600 034
3	ECONOL RPF (non-drying type)	M/s Process Aids, Bangalore
4	TECTYL 506	M/s Plastipeel Chemicals and Plastics (P) Ltd, Thane-400 604
5	TRPF	M/s Sundaram Paints Pvt. Ltd., Thanjavur-613 004
6	TRPF	M/s Solar Paints, Pudukkotai.
7	WICOR-P	M/s Western India Paint and Color Co P. Ltd, Madras-600 017

Use of any other brand/chemical shall be done with the prior approval of BHEL.

v. ACID PICKLING:

a) Wherever pickling done, it shall be done using Hydrochloric acid of 5-10% concentration for a period of 5 to 10 minutes at room temperature with suitable inhibitor.
b) After pickling thorough rinsing shall be carried out with water to remove acid residues & further DM water rinsing. After thorough rinsing with DM water, the rinsing shall not show any red color (free acidity) when tested with methyl orange indicator.

7.0 CERTIFICATION:

The manufacturer shall provide Test Certificates (TC) duly countersigned by the Authorized Inspecting Authority nominated by BHEL in P.O. (if specified) along with raw material TC from Steel Maker. *The applicable versions of the referred Codes, Standards and Specifications shall be reported in the Test Certificates and NDE reports.* Manufacturer's TC shall contain the following details as per the sample format attached as Annexure-1 to this TDC:

i. BHEL PO No & PO Date
ii. Technical Delivery Condition (TDC) No & its Revision No, Drawing & its revision no
iii. Melt/Heat No, Serial No (if applicable)
iv. Raw Material TC Number and Date
v. Chemical and Mechanical properties for Studs/Bolts and Nuts *including the location and orientation of test specimens*
vi. Heat treatment details (temperature, time, cooling medium, etc.)
vii. *NDE reports with NDE Personnel qualification records, all relevant NDE operating parameters and* NDE Results with reference and acceptance criteria
viii. Type of Surface coating & its coating thickness – Cadmium Plating, Chromate conversion coating, Electroplating, Xylan Coating, Rust preventive coating, etc.
ix. Test methods and results on Xylan Coating
x. Baking details for cadmium plating, electroplating & Xylan coating
xi. Manufacturers' identification mark
xii. Certify soundness & confirmation to PO requirements.

19/02/2021	19/2/21	19/2/21	19/2/21	19/02/2021
N Nagamuthu Pandian	P Arun kumar	S Lakshmi	A Wilfred Joseph	J V V Aruna Kumar
Manager/QA	DM / Valves Engg	DGM/QA	AGM / Valves/MM	SDGM / QA
Prepared By	**Reviewed By**			**Approved By**

Annexure-1. Test certificate for Studs/Bolts & Nuts– Sample format

TC No: Date:

Customer : PO No./ Amd :
TDC No./Rev.: DC No. :
Product : Drg. No./Rev :
Description : (Spec, dia, pitch, length) Thread Spec. :
Quantity :

Requirement : Records/ Observation
Size of bar - Before machining :
- After machining :
Type of furnace used for hardening :

TDC Clause no.	Raw Material mill TC No: Melt/Heat Number:	TC Date: *Reduction Ratio:*
2.0 & 3.0	**a) Heat Treatment Details:** Hardening Temperature: °C; Soaking time: Cooling Medium: Tempering Temperature: °C; Soaking time: Cooling Medium: **b) Additional Tempering for Nuts (after final tempering):** Temperature: ^{0}C; Soaking time: Cooling Medium:	

3.0										
	a) Product analysis for chemistry					**Report No & Date:**				
	Spec	C	Mn	P	S	Si	Cr	Mo	V	Ni	Others
	Min.										
	Max.										
	Actual										

b) Tensile test after H & T and final drying (Finished heat treated condition) – **For Studs/Bolts**

	UTS (MPa)	YS (MPa)	%Elongation	%Red in Area
Reqd/Spec Value				
Test result				

	Spec Value	Test result	Remarks
c) Hardness Test Result (for Studs/Bolts, Nuts):			
d) Hardness Test Result (for Nuts after 24 hrs of tempering):			
e) Proof load (kN) for nuts & result			
f) Result of Cone Stripping test for nuts			
g) NDE Result for Studs/Bolts:			

4.0	Visual and dimensional checking as per applicable drawing for studs/bolts & nuts:
5.0	Punching details (identification): End cap for threaded portion:

6.0		
	a) Type of coating: Cadmium Plating /Chromate Conversion / Electroplating/ Xylan /Rust preventive coating **(Tick applicable coating)** **Coating thickness/DFT:**	
	b) Tests for Xylan Coating	**Results**
	c) Pickling Acid: **Concentration:** Drying after pickling. Temperature: °C; Soaking time:	

This is to certify that the above results are correct and the parts meet specification and PO requirements.

Signature with date
Supplier: In-charge of Quality

Signature with date
BHEL / Authorized Inspection Agency

Note: Additional Sheets may be attached, if required.

ALL DIMENSIONS ARE IN MILLIMETRES. FOR TOLERANCES OF UNTOLERANCED DIMENSIONS DURING MANUFACTURE REFER RELEVANT QCP / QP.

DRAWING NO. 3-V-0000-06880 /11

SL. No.	DRAWING NUMBER	MATERAIL CODE	MATL.SPECN.	THREAD SIZE	NET Wt.(kg)	DIMENSIONS L	b	r	S-h12	ød-D11	øD	* MATL. MARK	APPLICABLE VALAVES
01	3-V-N073-06880/04	96 456 263 0000	ASTM A193-B7, CERTIFY, HT	1/2"-13UNC-2A	0.07	60	30	6	14	13.5	25	B7	2" & 3"/150C 3"/300C
02	3-V-N033-06880/04	96 456 264 0000		5/8"-11UNC-2A	0.16	75	38	6	17	17	32	B7	4"/150C 4"/300C
03	3-V-N001-06880/04	96 456 265 0000		5/8"-11UNC-2A	0.18	90	38	6	17	17	32	B7	6",8" & 12"/150C 6" & 8"-300C
04	3-V-N057-06880/04	96 456 266 0000		5/8"-11UNC-2A	0.23	120	38	6	17	17	32	B7	10"/150C
05	3-V-N206-06880/03	96 456 397 0000		5/8"-11UNC-2A	0.20	100	38	6	17	17	32	B7	10"/150C & 10"/300C
06	3-V-N224-06880/03	96 456 230 0000		5/8"-11UNC-2A	0.26	130	50	6	17	17	32	B7	14",16" & 20"/150C
07	3-V-C329-06880/03	96 456 432 0000		5/8"-11UNC-2A	0.22	110	40	6	17	17	32	B7	4"-900C
08	3-V-F503-06880/01	96 456 679 0000		1/2"-13UNC-2A	0.08	75	40	6	14	13.5	25	B7	3" & 4"-600C
09	3-V-N361-06880/01	96 456 690 0000		5/8"-11UNC-2A	0.31	160	50	6	17	17	32	B7	24"/150C
10	3-V-N201-06880/01	96 456 818 0000		1/2"-13UNC-2A	0.061	50	30	6	14	13.5	25	B7	2"-150C
11	3-V-M768-06880/01	96 456 853 0000	A320-Gr.L7 HT,CERTIFY	1/2"-13UNC-2A	0.07	60	30	6	14	13.5	25	L7	2" & 3"/300C 3"/150C
12	3-V-M769-06880/01	96 456 854 0000		5/8"-11UNC-2A	0.16	75	38	6	17	17	32	L7	4"/150C 4"/300C
13	3-V-M770-06880/01	96 456 855 0000		5/8"-11UNC-2A	0.18	90	38	6	17	17	35	L7	6" & 8"-300C 6" & 8"-150C
14	3-V-F501-06880	96 465 083 0000	A193-B7 HT,CERTIFY	1/2"-13UNC-2A	0.09	90	30	6	14	13.5	25	B7	2"-600C

DIMENIONS	h12	D11
10 TO 18	0	+0.160
	-0.180	+0.050

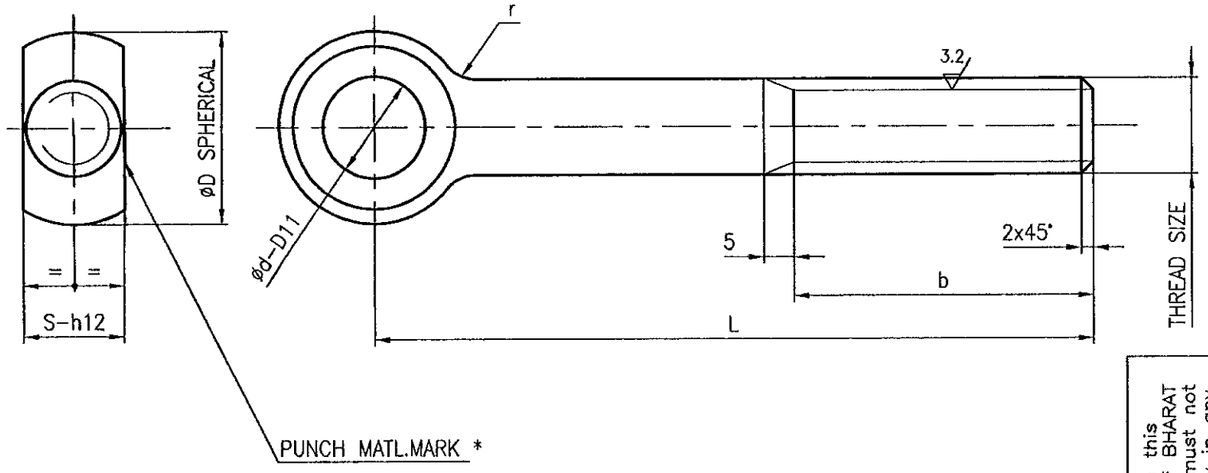

NOTES:

1. EYE BOLT TO BE MADE OUT OF FORGING.

DRAWING RETRACED WITH REVISION 11 ON 12.06.01 (REFER DCN.HM:393)

NO OFF	DESCRIPTION	MATL CODE	MATL SPECN	HEAT TREATMENT	SCRAP SORT	NET WT (kg)	GROSS WT (kg)	DRAWING No	ITEM No

TYPE OF PRODUCT OR NAME OF CUSTOMER/PROJECT: CS

BHARAT HEAVY ELECTRICALS LTD.
UNIT: HIGH PRESSURE BOILER PLANT.
TIRUCHIRAPALLI 620014.
365-121

	NAME	SIGN	DATE	NO.OF VAR.
DRN	K.P.LEON		12.06.01	—
CHD	T.R.R.MURTHY		12.06.01	
APPD	P.BOOMINATHAN		12.06.01	

DEPT VL
CODE 320
SCALE NTS.
WEIGHT (KG). —
REFERENCE INFORMATIONS: CAD:C306880
NO. OF ITEMS —

TITLE: EYE BOLT
CARD CODE U 01
DRAWING NO. 3-V-0000-06880
REV 11

REV	DATE	ALTERED
11	02.07.97	CHD & APPD

SL.NO.14 INCLUDED

CAUTION: The information on this document is the property of BHARAT HEAVY ELECTRICALS LTD. It must not be used directly or indirectly in any way detrimental to the interest of the company.

Size A3

BHARAT HEAVY ELECTRICALS LTD
IVP, GOINDWAL SAHIB

Material :Eye Bolts with Nuts; Technical Delivery conditions document No: TDC:5:164: & TDC:5:166

S.No.	Matl Code	Desc	Dia	Lgt	Matl	Drg No.
1	**964563960000**	**EYE BOLT M12X70-2476**	**12**	**70**	**A193 B7**	**4V247604073/01**
1A	413200001200	SINGLE NUT M-12	12		GR A 8	BPS 41320
2	**964607040000**	**EYE BOLT M20X140**	**20**	**140**	**A193 B7**	**3VL79022455/03**
2A	413190002000	HEX NUT M 20 GR B T425 BPS 41319	20		A194-2H	BPS 41319
3	**964568180000**	**EYE BOLT-N201-1/2"X50**	**1/2"**	**50**	**A193 B7**	**3VN20106880/01**
3A	964562790000	Single NUT ½" -13 UNC-2B-194-2H	1/2"		A194-2H	3VN07306876/03
4	**964562630000**	**EYE BOLT - 1/2"X60 -N073**	**1/2"**	**60**	**A193 B7**	**3VN07306880/04**
4A	964562790000	Single NUT ½" -13 UNC-2B-194-2H	1/2"		A194-2H	3VN07306876/03
5	**964566790000**	**EYE BOLT 1/2"X75-13UNC-2A L=75 -F503**	**1/2"**	**75**	**A193 B7**	**3VF50306880/01**
5A	964562790000	Single NUT ½" -13 UNC-2B-194-2H	1/2"		A194-2H	3VN07306876/03
6	**964650830000**	**EYE BOLT1/2X13 UNC 2A L=90MM**	**1/2"**	**90**	**A193 B7**	**3VF50106880/00**
6A	964562790000	Single NUT ½" -13 UNC-2B-194-2H	1/2"		A194-2H	3VN07306876/03
7	**964562640000**	**EYE BOLT 5/8"-11UNC-2A L=75 -N033**	**5/8"**	**75**	**A193 B7**	**3VN03306880/04**
7A	964562800000	Single Nut 5/8" -13 UNC-2B-194-2H	5/8"		A194-2H	3VN02506876/03
8	**964562650000**	**EYE BOLT-N001-5/8"X90**	**5/8"**	**90**	**A193 B7**	**3VN00106880/04**
8A	964562800000	Single Nut 5/8" -13 UNC-2B-194-2H	5/8"		A194-2H	3VN02506876/03
9	**964563970000**	**EYE BOLT 5/8X100 -N206**	**5/8"**	**100**	**A193 B7**	**3VN20606880/03**
9A	964562800000	Single Nut 5/8" -13 UNC-2B-194-2H	5/8"		A194-2H	3VN02506876/03
10	**964562300000**	**EYEBOLT-N224-5/8"X130**	**5/8"**	**130**	**A193 B7**	**3VN22406880/03**
10A	964562800000	Single Nut 5/8" -13 UNC-2B-194-2H	5/8"		A194-2H	3VN02506876/03
11	**964566900000**	**EYE BOLT-N361-5/8"X160**	**5/8"**	**160**	**A193 B7**	**3VN36106880/01**
11A	964562800000	Single Nut 5/8" -13 UNC-2B-194-2H	5/8"		A194-2H	3VN02506876/03
12	**412251611000**	**EYE BOLT GR A 8.8 M16X110 BPS 41225**	**16**	**110**	**GR A 8.8**	**41225**
12A	413200001600	SINGLE HEX NUT M16*2	16		GR A 8	BPS 41320
13	**964605290000**	**FV LIFT EYE BOLT WITH COLLAR M36-L805**	**36**		**IS-1875 Cl 2**	**3VL80506620/00**
14	**412290001600**	**EYE BOLT M16X50X22**	**16**		**IS-4190**	**IS-4190**
15	**412290002000**	**BOLTEYE COL M20**	**20**		**IS-4190**	**IS-4190**

1.0 MATERIAL SPECIFICATION

SA 193 Gr B7/B7M/B16{latest material standard as per Purchase Order (P.O.)}

2.0 GENERAL

This TDC is suitable for API 6A applications including NACE MR-01-75 Cl.II & Cl.III also.
Shall be manufactured to the relevant size in the drawing & P.O.requirements.
Hot rolled & Cold drawn bars, if used shall be machined at least 2mm(minimum)in radius (ie 4mm in dia) to remove the seams completely. After machining atleast 10% of the bars shall be tested by MPI to ensure that the surface defects are fully removed.
For HT of finished studs/bolts, salt bath or controlled atmosphere furnace to be used,
After HT, the threads shall be thoroughly cleaned to remove all deposits. If acid pickling is done for cleaning, it shall be as per Cl.7.4.
Cadmium plating(Cl.7.1)/Galvanising(Cl.7.2) if specified in Drg/P.O.For all other cases rust preventive fluid coating (Cl.7.3) shall be done.

3.0 CHEMICAL & MECHANICAL PROPERTIES

Mill certificate from steel manufacturer for conformance to the chemistry heat-wise. Additionally, product analysis shall be done for one piece/heat by the stud/bolt manufacturer.
One Tensile test/heat/size/ HT batch in the finished heat-treated condition as per SA193.

HARDNESS

For SA193 B7 & B16:
Hardness check shall be carried out on finished stud/bolt as per SA193,at least in 10% of the lot.Hardness in the finished stud/bolt shall be 25 to 34 HRC or 253 to 319 BHN.For other grades hardness value shall be as per the material specification.

NDE

Magnetic particle inspection shall be carried out in atleast 10% of the finished stud/bolt of all grades.Cracks/Linear indications are unacceptable.

For SA193 B7M:
Hardness check on 100% of stud/bolt.Hardness must be within 201 to 235 BHN.

4.0 FINAL INSPECTION

All inspection shall be in accordance with relevant drawing or BPS and SA193.
The threads shall be checked with calibrated ring gauges in the final heat-treated condition for black variety and in final plated condition for the plated/galavanised variety.
Visual & dimensional checks and acceptance shall be as per IS 2614 Table-I (latest).

5.0 MARKING & PACKING

Punch/emboss each finished stud/bolt with material grade (B7/B7M/B16, etc.,) and supplier's emblem underlining the grade symbol.
Punch/emboss Sl.no also in B7M studs/bolts in addition to the above to correlate with hardness.
Protect the threaded ends with plastic end caps.Pack in wooden box/gunny bag of convenient size for easy handling and transportation.Mark quantity in each box/gunny bag.

6.0 CERTIFICATION

The manufacturer shall provide TC (ref. page 3) duly countersigned by the Authorised Inspecting Authority nominated by BHEL in P.O. (if specified) along with Raw Material TC from Steel Maker.Manufacturer's TC shall contain P.O.No,TDC No.,Heat No., Chemical and Mechanical properties,HT parameters,surface coating with coating thickness, baking details,manufacturers' identification mark and certify soundness & confirmation to P.O. requirements.

7.0 SPECIAL REQUIREMENTS

7.1 CADMIUM PLATING REQUIREMENTS

Clean the studs/bolts to make it free from rust, grease, oil, scale, etc.,before plating.
When pickling is considered essential, it shall be done as per Cl 7.4.
Apply Cadmium Plating to the specified thickness on specified areas.

After plating, bake the parts at 175 Deg.C to 205 Deg.C for a minimum period of 3 hours. The elapsed time between plating and baking shall not exceed 8 hours.
Apply a Chromate Conversion coating after plating and baking.

7.2 GALVANISING

Clean the studs/bolts to make it free from rust, grease, oil, scale, etc.,before galvanising
When pickling is considered essential, it shall be done as per Cl 7.4.
The fasteners shall be galvanised by electroplating process to obtain the minimum coating thickness as specified in PO/drawing.
After galvanising bake the parts at 175 to 205 deg.C for a minimum period of 3 hours.The elapsed time between plating and baking shall not exceed 8 hours.
Apply a Chromate Conversion coating after plating and baking.

7.3 RUST PREVENTIVE COATING REQUIREMENTS

Clean the studs/bolts to make it free from rust, grease, oil, scale, etc., before applying protective coating. When pickling is considered essential it shall be done as per Cl 7.4.
One coat of rust preventive fluid of any of the following vendors shall be applied.

CHEMICAL	VENDOR
1. BONITA-RPF	M/s Bonita Chemicals, 64, Industrial Estate, Nunhai, Agra-282 006.
2. CHAMPION-RPF	M/s Guardian Chemicals, 8, Rajaji IInd st, West Lake Area, Nungambakkam, Madras-600 034
3. ECONOL RPF (non-drying type)	M/s Process Aids, Bangalore
4. TECTYL 506	M/s Plastipeel Chemicals and Plastics (P) Ltd, Thane-400 604
5. TRPF	M/s Sundaram Paints Pvt. Ltd., Thanjavur-613 004
6. TRPF	M/s Solar Paints, Pudukkotai.
7. WICOR-P	M/s Western India Paint and Color Co P. Ltd, Madras-600 017

7.4 ACID PICKLING

When pickling is considered essential for cleaning, it shall be done using Hydrochloric acid of 5 to 10% acid concentration at room temperature with inhibitor.
The concentration and type of inhibitors shall be as recommended by any of the following vendors.
1) M/s Agromore Ltd. Bangalore. 2) M/s Prosol Corporation, Hyderabad. 3) M/s Guardian Anti-corrosives, Madras. 4) M/s Mascat Chemicals, Bombay.
After pickling thorough rinsing shall be carried out with water to remove acid residues.
Immediately after pickling, the components shall be dried and baked at 175 to 205 deg C for 3hours before taking up the next operation (plating).

Revision Record:

Rev:00/17.01.90: First issue, Rev:01/21.06.90: Editorial corrections, Rev:02/21.04.91: TC for studs/bolts added
Rev:03/04.04.96: Annexure-I amended. Cl 3.3.3 & 5.3 modified, Rev:04/20.10.96: NDT, Acid pickling added & re-written, Rev:05/28.04.98: Cl 3 modified to include MPI, certificate modified & Cl 7.4 deleted
Rev:06/15.06.99: Title, Cl 1 to 5 & 7.1 modified. Cl.7.2 changed to Cl 7.3. Cl 7.3 changed to 7.4 & modified. Cl 7.2 Galvanising added. Test certificate sample format modified.

R.Rajasekar	K.Nagarajan	Haridoss	G.Mathivanan	P.Vasudevan	K.Rengachari
Qual. Assurance	Engg/Valves	Purchase/Valves	Quality Control	Quality assurance	Qual Assurance
Prepared by		**Reviewed by**			**Approved by**

TEST CERTIFICATES FOR STUDS/BOLTS - SAMPLE FORMAT

```
   TC NO:                                                                    DATE:
-------------------------------------------------------------------------------------
  CUSTOMER     :                              PO No/Amd :
  TDC No/Rev.  :                              DC No     :
  PRODUCT     :                              DRG.No     :
  DESCRIPTION   :(Spec,dia,pitch,length)            THREAD SPEC:
  QUANTITY     :
-------------------------------------------------------------------------------------
  Requirement                                 Records/observations
  ------------                                --------------------
  size of bar - Before m/c ing       :
              - After m/c ing        :
  Type of furnace used for hardening :
-------------------------------------------------------------------------------------
           | Mill TC for raw material                     TC No:
  TDC Cl No|Melt Number.
------------|------------------------------------------------------------------------
           |Product analysis for chemistry.          Report No:
            |-----------------------------------------------------------------------
          |Spec      |  C     Si     Mn     P     S     Cr     Mo     V     Others
          |(min,max) |
          |Actual    |
          |-------------------------------------------------------------------------
          |Hardening Heat treatment        Temperature:    Deg C. Soaking time
          |Tempering after hardening       Temperature:    Deg C. Soaking time
          |-------------------------------------------------------------------------
          |Tensile test after H&T & final drying(Finished heat treated condition
          |-------------------------------------------------------------------------
  3.0       |             Tensile    Yield    %Elongation on 2"GL   %Reduction in area
          |-------------------------------------------------------------------------
          |Spec      |
          |(mini,max)|
          |Actual    |
            |-----------------------------------------------------------------------
          |Hardness measured
          |------------------
          |10 % MPI on the finished studs.  Report No:
-------------------------------------------------------------------------------------
  4.0       |Visual & dimensional checking as per IS 2614 table 1
------------|-----------------------------------------------------------------------
  5.0       |Punching details(identification)
            |End cap for threaded portion
------------|-----------------------------------------------------------------------
  7.0       |Pickling.        Acid:               Concentration:
            |Drying after pickling.      Temperature:    Deg C.      Soaking time
            |Type of coating         Cadmium/Galvanising/Rust preventive
            |Coating thickness
            |Chromate conversion coating.
            |Drying after coating.       Temperature:    Deg C.      Soaking time
-------------------------------------------------------------------------------------
This confirms that the above results are correct and the parts are as per speccification
and P.O requirements.
-------------------------------------------------------------------------------------

Signature                                          Signature
BHEL/Authorised Inspection agency                   Incharge of Quality
-------------------------------------------------------------------------------------
```

1.0 MATERIAL SPECIFICATION - SA 194 Gr2H/Gr2HM/Gr4/Gr7 {latest on date of Purchase Order (P.O)}

2.0 GENERAL

This TDC is applicable for API 6A applications including NACE MR-01-75 cl.II & cl.III also.
Shall be manufactured to the relevant drawing and P.O. requirements.
Nuts shall be hot/cold forged or manufactured from hot rolled/cold drawn bars. If made from hexagonal bars, 100% MT is to be done on bars. If made from round bars, the bars shall be machined to remove 2mm from surface, (ie 4mm in dia) to remove all surface defects. Atleast 10% of the machined bars shall be MT tested to ensure that the surface defects are fully removed.
Nuts shall be heat treated to meet the requirements of SA194 only in a salt bath, or controlled atmosphere furnace. After HT the threads shall be thoroughly cleaned to remove all deposits. When acid pickling is done for cleaning it shall be done as per Cl 7.3.
Cadmium plating as per (Cl 7.1) if specified in drg/P.O. or rust preventive fluid coating as per (Cl 7.2) shall be done.

3.0 **CHEMICAL & MECHANICAL PROPERTIES**

Mill certificate for chemical composition from steel manufacturer for conformance to the specification heat-wise. Additionally, product analysis shall be done for one piece/heat by the nut manufacturer.

HARDNESS

For SA194 2H, Gr4, & Gr7

Hardness check on finished nut as per SA194, using sampling plan (Cl.7.4).Hardness in the finished nut shall be 24 to 35 HRC or 248 to 352 BHN.

For SA194 Gr2HM:

Hardness check on 100% of nuts.Hardness must be within 159 to 237 BHN.
Proof load test shall be done as per SA194 for all grades.
After final heat treatment, sample nuts shall be heat treated as below and meet the corresponding hardness requirements.

Grade	Temp	TimeCooling	Hardness at room temp.
2H	540°C	24Hrs	Slow cool 179 BHN (min)
2HM	540°C	-do-	Slow cool 159 BHN (min)
Gr4/Gr7	590°C	-do-	Slow cool 201 BHN (min)

CONE STRIPPING TEST: This test shall be performed as per SA194 in case of visible surface discontinuities.On such cases Proof load shall be as per ASTM A194 (latest std).

4.0 **FINAL INSPECTION**

All inspection shall be as per drawing and SA194.
The threads shall be checked with calibrated plug gauge in the final heat-treated condition for black variety and in final plated condition for the plated variety.
Visual and Dimensional checks in the finished nuts and their acceptance shall be as per IS 2614 Table-I(latest).

5.0 **MARKING & PACKING**

Punch/emboss each finished nuts with material grade (2H/2HM/Gr4/Gr7); supplier's emblem.
Punch/emboss Sl.no also in **2HM** nuts in addition to the above to co-relate with hardness. In addition, the grade symbol shall be underlined.
Pack in wooden box of convenient size for easy handling & transportation.Mark quantity in each box.

6.0 **CERTIFICATION**

The manufacturer shall provide TC (ref. page 3) duly countersigned by the Authorised Inspecting Authority nominated by BHEL in P.O. (if specified) along with Raw Material TC from Steel Maker.
Manufacturer's TC shall contain P.O.No.heat no., Chem & Mech properties,HT parameters,surface coating with coating thickness, baking details and certify soundness & confirmation to P.O. requirements.

7.0 **SPECIAL REQUIREMENTS**

7.1 **CADMIUM PLATING REQUIREMENTS**

Clean the nuts to make it free from rust, grease, oil, scale, etc.,before plating.
When pickling is considered essential, it shall be done as per Cl 7.3.
Apply Cadmium Plating to the specified thickness on specified areas.
After plating, Bake the parts at 175 Deg.C to 205 Deg.C for a minimum period of 3 hours. The elapsed time between plating and baking shall not exceed 8 hours.
Apply a Chromate Conversion coating after plating and baking.

7.2 **RUST PREVENTIVE COATING REQUIREMENTS**

Clean the nuts to make it free from rust, grease, oil, scale, etc., before applying protective coating.
When pickling is considered essential it shall be done as per Cl 7.3.
One coat of rust preventive fluid of any of the following vendors shall be applied.

CHEMICAL	**VENDOR**
1. **BONITA-RPF**	M/s Bonita Chemicals, 64, Industrial Estate, Nunhai, Agra-282 006.
2. **CHAMPION-RPF**	M/s Guardian Chemicals, 8, Rajaji IInd st, West Lake Area, Nungambakkam, Madras-600 034
3. **ECONOL RPF** (non-drying type)	M/s Process Aids, Bangalore
4. **TECTYL 506**	M/s Plastipeel Chemicals and Plastics (P) Ltd, Thane-400 604
5. **TRPF**	M/s Sundaram Paints Pvt. Ltd., Thanjavur-613 004
6. **TRPF**	M/s Solar Paints, Pudukkotai.
7. **WICOR-P**	M/s Western India Paint and Color Co P. Ltd, Madras-600 017

7.3 **ACID PICKLING**

When pickling is considered essential for cleaning, it shall be done using Hydrochloric acid of 5 to 10% acid concentration at 50 deg C with inhibitor.
The concentration and type of inhibitors shall be as recommended by any of the following vendors.
1) M/s Agromore Ltd. Bangalore. 2) M/s Prosol Corporation, Hyderabad. 3) M/s Guardian Anticorrosives, Madras. 4) M/s Mascat Chemicals, Bombay.
After pickling thorough rinsing shall be carried out with water to remove acid residues.
Immediately after pickling, the components shall be dried and baked at 175 to 205 deg C for 3hours before taking up the next operation.

7.4 **SAMPLING PLAN FOR HARDNESS CHECK AFTER HT**

The following double sampling plan shall be used.Hardness values shall be 25 to 34 HRC after HT.
IS 2500 (Double Sampling) Normal Inspection,Level 2.

No. of Pieces in the lot	Acceptable Quality Level (2.5%)						
	First sample (n1)	Acceptance number (Ac)	Reject number (Rc)	Second sample (n2)	Combined sample (n1+n2)	Acceptance number (Ac)	Rejection number -
0 - 500	32	1	4	32	64	4	5
501 - 1200	50	2	5	50	100	6	7
1201 - 3200	80	3	7	80	100	8	9
3201 -10000	125	5	9	125	250	12	13
10001-35000	200	7	11	200	400	18	19

Ac:-Acceptance number: Max. no. of defectives allowed in the sample for the acceptance of the lot.
Rc:-Rejection number: Min.no. of defectives in the sample resulting in the lot's rejection.

PROCEDURE FOR OPERATING THIS PLAN : Suppose the lot size is 1,000. From table chose the class, which includes 1,000 viz 501 - 1200. Hence, use the sampling plan given against this class.Take a sample of 50 pieces and test for hardness.

Revision record:

Rev:00/11.04.90 : First issue
Rev:01/21.06.90 : Editorial corrections
Rev:02/21.04.91 : TC for nuts added
Rev:03/20.10.96 : NDT,Acid pickling added & rewritten
Rev:04/13/01/99 : Studs/bolts changed as nuts in Cl.5,7.1,7.2

R.Rajasekar	K.Nagarajan	Haridoss	G.Mathivanan	P.Vasudevan	K.Rengachari
Qual. Assurance	Engg/Valves	Purchase/Valves	Quality Control	Quality assurance	Qual Assurance
Prepared by		**Reviewed by**			**Approved by**

TEST CERTIFICATE FOR NUTS - SAMPLE FORMAT

TC NO: DATE:

CUSTOMER : P.O.NO: Dt:
D.C.NO: Dt:
PRODUCT : Specn :
SIZE OF BAR USED:
RAW MATL TC NO: TDC NO:
HEAT NO.: DRG NO:
LOT NO: Thread specn:
QUANTITY:

CHEMICAL COMPOSITION(%):

C	Si	Mn	P	S	Cr	Ni	Others

HEAT TREATMENT:

HARDENING: TEMP: Deg.C;SOAKING TIME: Minutes; COOLING MEDIUM:
TEMPERING: TEMP: Deg.C.SOAKING TIME: Minutes; COOLING MEDIUM:
BAKING TEMP : Deg.CBAKING TIME: Minutess.

MECHANICAL TESTING:

HARDNESS AFTER HT (MIN & MAX) : BHN NO OF SAMPLES TESTED :
HARDNESS AFTER 24 HRS TEMPERING ON SAMPLE NUT : BHN
PROOF LOAD APPLIED : Kgf
CONE PROOF LOAD TEST : LOAD APPLIED:

MAGNETIC TESTING (IN PROCESS):
FINAL INSPECTION (VISUAL):

SURFACE COATING : COATING THICKNESS : Microns
IDENTIFICATION :

It is certified that the above results are correct and the parts are as per specification & P.O. requirements.

	BHARAT HEAVY ELECTRICALS LIMITED TRICHY-620 014 WELDING TECHNOLOGY CENTRE	WCPI - 218 Revision No.: 09 Date: 23.02.2016

WELDING CONSUMABLE PURCHASE INSTRUCTION (WCPI)
FOR ASME SEC.II.C, SFA-5.4, E309-16

1.0 SCOPE:

1.1 The electrodes shall comply with requirements specified in the latest edition (applicable on the date of issue of purchase order) of ASME Sec IIC, SFA-5.4, E309-16. All tests, acceptance criteria shall be in accordance with this. Additional requirements specified in this document shall also be complied.

1.2 The electrodes shall be supplied in quantities as specified in the purchase order. The brand of SMAW electrodes to be supplied shall be approved by the concerned IBR Authorities of the state. Every batch to be supplied should have been manufactured during the period when IBR approval for the brand was valid.

2.0 CHEMICAL COMPOSITION:

The chemical composition of the undiluted weld metal shall conform to ASME SEC IIC SFA-5.4, E309-16 for each size of electrode supplied and the ferrite content of welds made using this electrode shall be controlled to be from 6FN to 10FN for each size of electrode supplied. (Ferrite content should be measured in accordance with procedure recommended in the latest edition of ASME Sec IIC, SFA 5.4).

3.0 MECHANICAL PROPERTIES:

The mechanical properties of the weld metal deposited using this electrode shall meet the requirements of ASME SECII.C SFA-5.4, E309-16 for each size of electrode supplied.

4.0 RADIOGRAPHIC SOUNDNESS:

The radiographic test shall meet the requirements of ASME SECII.C SFA-5.4, E309-16 for each size of electrode supplied.

5.0 FILLET WELD TEST:

Fillet weld test done using this electrode shall meet the requirements specified in ASME SEC II C SFA 5.4, E309-16 for each size of electrode supplied. The electrodes shall exhibit smooth running characteristics with soft and stable arc with ease of striking. The spatter level shall be negligible. Weld bead appearance shall be smooth with fine ripples and slag shall be self-peeling.

6.0 SIZE:

The electrodes shall be supplied in diameters and lengths as specified in the purchase order. The tolerance on diameter and length shall meet the requirements of per SFA-5.4 for each size of electrode supplied.

7.0 CORE WIRE, COVERING, EXPOSED CORE, IDENTIFICATION, METHOD OF MANUFACTURE:

The electrodes shall meet the requirements of clause 3.2, 3.3, 3.4 of SFA-5.02 and clause 14 of SFA 5.4 for each size of electrode supplied.

Prepared:	Reviewed and approved:
Suraj N Engineer/WTC	S.Singaravelu SDGM/WTC

8.0 PACKAGING:

8.1 Electrodes packed in standard quantity shall be wrapped tightly in a corrugated paper with moisture proof packing in polythene bags and sealed. These shall be further packed either in hermetically sealed containers or in cardboard packets and then packed with polythene bags and sealed. The number of electrodes per packet shall be such that the net weight of each packet does not exceed 5Kg. Packets shall be further packed in cardboard cartons each weighing not more than 25kg. The cartons shall be packed in waterproof boxes with crates so as to ensure no damage to electrodes during shipment and normal storage conditions.

8.2 Weight of each crate shall not exceed 1000kg.

8.3 Markings of packages shall be as per clause 3.6 of SFA-5.02.

9.0 TESTING AND CERTIFICATION:

9.1 Each consignment of electrodes supplied shall preferably be from one batch only.

9.2 Batch or lot classification shall be Class C1 as per SFA-5.01 filler metal procurement guidelines of ASME Sec IIC. (Latest edition)

9.3 The level of testing shall be Schedule K as per SFA-5.01 filler metal procurement guidelines of ASME Sec IIC. (Latest edition)

9.4 Three copies of original certified material test report in English signed by the manufacturer giving details of tests done in compliance with this WCPI and ASME Sec IIC, SFA-5.4, E309-16 shall be sent.

9.5 The manufacturer shall certify that supplies made against the batch conforms to the requirements of the latest edition (applicable on the date of issue of purchase order) of ASME Sec IIC SFA-5.4, E309-16.

9.6 A copy of valid IBR approval certificate for the brand being supplied shall be sent along with every consignment.

9.7 Every packet supplied shall be exhibited with details in the below mentioned format through a seal or securely affixed label.

"Certified by ----------
(Mention the concerned IBR authority of the state)
Under periodic check test dated: XX-XX-XXXX.
Brand approval valid till : XX-XX-XXXX."

PURCHASE INSTRUCTION FOR STAINLESS STEEL SMAW ELECTRODE TO ASME SEC.II.C, SFA 5.4, CLASS E 410-15.

1.0 SCOPE:

1.1 This purchase instruction prescribes the requirements for Stainless Steel Shielded Metal Arc Welding Electrode that conforms to ASME SEC II, Part C, and SFA 5.4 Classification. E 410-15.

2.0 GENERAL:

2.1 Electrodes shall be supplied in sizes and quantities as specified in the Purchase Order.

2.2 The Electrode shall comply with requirements called for in the latest edition of ASME Sec II C, SFA 5.4, and Class E 410-15. Additional requirements specified in this document also apply.

2.3 Alloy steel core wires shall be used in the manufacture of these Electrodes. (Non-Synthetic type).

3.0 CHEMICAL COMPOSITION:

3.1 The chemical composition of the undiluted weld metal deposited using the Electrode shall be as follows.

Carbon	0.12 % Max	Silicon	0.90 % Max
Chromium	11.00-13.50 %	Phosphorous	0.04 % Max
Nickel	0.70 % Max	Sulphur	0.03 % Max
Molybdenum	0.75 % Max	Copper	0.75 % Max
Manganese	1.00 % Max		

PREPARED	REVIEWED	APPROVED
(S.SINGARAVELU) MANAGER / WTC	(A. WILFRED JOSEPH) DGM/WTC	(S. CHELLAIAH) AGM/WTC,WCMC&TE

4.0 **USABILITY:**

4.1 The Electrode shall allow it to be used with DCEP in All positions (4mm and smaller diameters.)

4.1 The Electrode shall produce Acceptable Radiography Quality welds with uniform properties and without cracks, or zones of incomplete fusion nor any Porosity or slag inclusions.

5.0 **WELD METAL HARDNESS.**

The hardness of weld metal deposited using the Electrode on a deposited thickness of 2 mm shall be 350-400 BHN. (As welded)

6.0 **SIZE, COVERING, ARC END & GRIP END AND IDENTIFICATION:**

6.1 **SIZE:**

Electrode shall be supplied in diameters and lengths as specified in the Purchase order.

6.2 **COVERING:**

The core wire and covering shall be free of defects that would interfere with uniform deposition of weld metal.

6.3 **ARC END & GRIP END:**

The Arc end of each Electrode shall be sufficiently bare and covering sufficiently tapered for easy striking of the Arc. The Grip end shall be bare for a length that is sufficient to provide electrode electrical contact with the Electrode Holder.

6.4 **IDENTIFICATION:**

All electrodes shall be identified by providing at least one imprint of the Electrode Classification near the grip end. (Prefix letter 'E' may be omitted). The numbers and letters of the imprint shall be of bold block type and of a size large enough to be legible.

The ink used for imprint shall provide sufficient contrast with the electrode covering so that the imprint shall remain legible after drying and welding.

7.0 PACKING AND MARKING OF PACKAGES:

7.1 PACKAGING:

Electrodes in standard quantity shall be wrapped tightly in a corrugated paper and then packed in moisture proof polythene bags and sealed. These shall be further packed either in hermetically sealed containers or in cardboard packets and then packed in polythene bags and sealed.

The number of electrodes per packet shall be such that the Net weight of each packet does not exceed 5 Kg. Packets shall be shipped (transported) in wooden crates lined with waterproof material. Net weight of each wooden crate shall not exceed 50 Kg. Each crate shall contain electrode packets of one size and batch only.

Alternatively Electrodes in Standard quantity shall be tightly packed in moisture proof plastic containers and sealed. The number of Electrodes per container shall be such that the Net Weight of each container does not exceed 5 Kg. Containers shall be further packed in Cartons and encapsulated in Polythene covers and sealed. Net Weight of each encapsulated carton shall not exceed 15 Kg. Each carton shall contain Electrode containers from one size and Batch only.

7.2 MARKING OF PACKAGES:

The following product information shall be legibly marked/labeled on the outer side of each packet/container.

a) AWS Specification and Classification numbers
b) Suppliers Name and Brand
c) Size, Quantity of Electrodes and Net weight
d) Batch No and Date of manufacture

8.0 CERTIFICATION AND TESTING:

8.1 Each consignment of electrodes shall be of from one Batch only.

8.2 Batch classification shall be Class C4 as per Section 5.0 of SFA-5.01 Filler metal procurement guidelines of the Latest Edition of ASME Sce.II. Part C.

8.3 The level of testing shall be Schedule –K as per Section 6.0 of SFA 5.01 Filler metal procurement guidelines of the Latest Edition of ASME Sec.II. Part C.

8.4 Three copies of Test certificates giving details of following tests done for compliance to this WCPI over and above requirements called for the Latest Edition of ASME Sec.II.C, SFA-5.4, Class E 410-15 shall be sent.

a) Chemical composition of Weld Metal for the elements listed in clause 3.1

b) Test for weld metal Hardness to HRC scale. (As welded)

8.5 The testing authority shall certify that supplies made against the Batch conforms to the requirements of the Latest Edition of ASME Sec.II, Part C, SFA 5.4 Class E 410-15 and this WCPI.

==========

PURCHASE INSTRUCTION FOR STAINLESS STEEL SMAW ELECTRODE TO ASME SEC.II.C, SFA 5.4, CLASS E 430-15.

1.0 SCOPE:

1.1 This purchase instruction prescribes the requirements for Stainless Steel Shielded Metal Arc Welding Electrode that conforms to ASME SEC II, Part C, and SFA 5.4 Classification. E 430-15.

2.0 GENERAL:

2.1 Electrodes shall be supplied in sizes and quantities as specified in the Purchase Order.

2.2 The Electrode shall comply with requirements called for in the latest edition of ASME Sec II C, SFA 5.4, and Class E 430-15.

2.3 Alloy steel core wires shall be used in the manufacture of these Electrodes. (Non-Synthetic type).

3.0 CHEMICAL COMPOSITION:

3.1 The chemical composition of the undiluted weld metal deposited using the Electrode shall be as follows.

Carbon	0.10 % Max	Silicon	0.90 % Max
Chromium	15.00-18.00 %	Phosphorous	0.04 % Max
Nickel	0.60 % Max	Sulphur	0.03 % Max
Molybdenum	0.75 % Max	Copper	0.75 % Max
Manganese	1.00 % Max		

PREPARED	REVIEWED	APPROVED
(S.SINGARAVELU) MANAGER / WTC	(A. WILFRED JOSEPH) DGM/WTC	(S. CHELLAIAH) AGM/WTC,WCMC&TE

4.0 USABILITY:

4.1 The Electrode shall allow it to be used with DCEP in All positions (4mm and smaller diameters.) The Electrode shall produce Acceptable Radiography Quality welds with uniform properties without cracks, or zones of in complete fusion nor any Porosity or slag inclusions.

5.0 SIZE, COVERING, ARC END & GRIP END AND IDENTIFICATION:

5.1 SIZE:

Electrode shall be supplied in diameters and lengths as specified in the Purchase order.

5.2 COVERING:

The core wire and covering shall be free of defects that would interfere with uniform deposition of weld metal.

5.3 ARC END & GRIP END:

The Arc end of each Electrode shall be sufficiently bare and covering sufficiently tapered for easy striking of the Arc. The Grip end shall be bare for a length that is sufficient to provide electrode electrical contact with the Electrode Holder.

5.4 IDENTIFICATION:

All electrodes shall be identified by providing at least one imprint of the Electrode Classification near the grip end. (Prefix letter 'E' may be omitted). The numbers and letters of the imprint shall be of bold block type and of a size large enough to be legible.

The ink used for imprint shall provide sufficient contrast with the electrode covering so that the imprint shall remain legible after drying and welding.

6.0 PACKING AND MARKING OF PACKAGES:

6.1 PACKAGING:

Electrodes in standard quantity shall be wrapped tightly in a corrugated paper and then packed in moisture proof polythene bags and sealed. These shall be further packed either in hermetically sealed containers or in cardboard packets and then packed in polythene bags and sealed.

The number of electrodes per packet shall be such that the Net weight of each packet does not exceed 5 Kg. Packets shall be shipped (transported) in wooden crates lined with waterproof material. Net weight of each wooden crate shall not exceed 50 Kg. Each crate shall contain electrode packets of one size and batch only.

Alternatively Electrodes in Standard quantity shall be tightly packed in moisture proof plastic containers and sealed. The number of Electrodes per container shall be such that the Net Weight of each container does not exceed 5 Kg. Containers shall be further packed in Cartons and encapsulated in Polythene covers and sealed. Net Weight of each encapsulated carton shall not exceed 15 Kg. Each carton shall contain Electrode containers from one size and Batch only.

6.2 MARKING OF PACKAGES:

The following product information shall be legibly marked/labeled on the outer side of each packet/container.

a) AWS Specification and Classification numbers
b) Suppliers Name and Brand
c) Size, Quantity of Electrodes and Net weight
d) Batch No and Date of manufacture

7.0 CERTIFICATION AND TESTING:

7.1 Each consignment of electrodes shall be of from one Batch only.

7.2 Batch classification shall be Class C4 as per Section 5.0 of SFA-5.01 Filler metal procurement guidelines of the Latest Edition of ASME Sce.II. Part C.

7.3 The level of testing shall be Schedule –K as per Section 6.0 of SFA 5.01 Filler metal procurement guidelines of the Latest Edition of ASME Sec.II. Part C.

7.4 Three copies of Test certificates giving details of chemical analysis of undiluted weld metal for elements listed in clause 3.1 shall be sent.

7.5 The testing authority shall certify that supplies made against the Batch conforms to the requirements of the Latest Edition of ASME Sec.II, Part C, SFA 5.4 Class E 430-15 and this WCPI.

	BHARAT HEAVY ELECTRICALS LIMITED TRICHY-620 014 WELDING TECHNOLOGY CENTRE	WCPI - 207 Revision No.: 09 Date: 23.02.2016

WELDING CONSUMABLE PURCHASE INSTRUCTION (WCPI)
FOR ASME SEC.II.C, SFA-5.1 E7018-1

1.0 SCOPE:

1.1 The electrodes shall comply with requirements specified in the latest edition (applicable on the date of issue of purchase order) of ASME Sec.II.C.SFA-5.1, E7018-1. All tests, acceptance criteria shall be in accordance with this. Additional requirements specified in this document shall also be complied.

1.2 The electrodes shall be supplied in quantities as specified in the purchase order. The brand of SMAW Electrodes to be supplied shall be approved by the concerned IBR Authorities of the state. Every batch to be supplied should have been manufactured during the period when IBR approval for the brand was valid.

2.0 CHEMICAL COMPOSITION:

The chemical composition of the undiluted weld metal using this electrode shall conform to ASME SEC IIC SFA-5.1, E7018-1 for each size of electrode supplied.

3.0 MECHANICAL PROPERTIES:

The mechanical properties of the weld metal deposited using this electrode after stress relieving the test plate assembly at 620±10°C for 300 minutes shall meet the requirements of impact test as per ASME SECII.C SFA-5.1, E7018-1 and other properties as below for each size of electrode supplied.

Yield Strength at 0.2% Offset	410 MPa Minimum
Tensile Strength	540 MPa Minimum
Elongation in 50.8mm	22% Minimum

4.0 RADIOGRAPHIC SOUNDNESS:

The electrode shall be suitable for radiography quality butt joint welding of boiler pressure parts of SA299, SA106GrB, SA106GrC pipe material. The radiographic test shall meet the requirements of ASME SECII.C SFA-5.1, E7018-1 for each size of electrode supplied.

5.0 FILLET WELD TEST:

Fillet weld test done using this electrode shall meet requirements as per ASME SECII.C SFA-5.1, E7018-1 for each size of electrode supplied. The electrodes shall exhibit smooth running characteristics with soft and stable arc with ease of striking. The spatter level shall be negligible. Weld bead appearance shall be smooth with fine ripples and slag shall be self-peeling.

6.0 SIZE:

The electrodes shall be supplied in diameters and lengths as specified in the purchase order. The tolerance on diameter and length shall be as per SFA-5.1 for each size of electrode supplied.

Prepared: Suraj N Engineer/WTC	Reviewed and approved: S. Singaravelu SDGM / WTC

7.0 CORE WIRE, COVERING, EXPOSED CORE, IDENTIFICATION, METHOD OF MANUFACTURE:

The electrodes shall meet the requirements of clause 3.2, 3.3, 3.4 of SFA 5.02 and clause 19 of SFA 5.1 for each size of electrode supplied.

8.0 MOISTURE CONTENT OF COVERING AND DIFFUSIBLE HYDROGEN CONTENT:

Moisture content of the electrode covering shall not exceed the limit specified in ASME Sec II C, SFA 5.1 E7018-1 for each size of electrode supplied. Diffusible hydrogen content of weld metal deposited using the electrode shall be maximum 4ml/100g. Test to be done as per ASME Sec IIC, SFA 5.1 E7018-1 for each size of electrode supplied.

9.0 PACKAGING:

9.1 Electrodes packed in standard quantity shall be wrapped tightly in a corrugated paper with moisture proof packing in polythene bags and sealed. These shall be further packed either in hermetically sealed containers or in cardboard packets and then packed with polythene bags and sealed. The number of electrodes per packet shall be such that the net weight of each packet does not exceed 5Kg. Packets shall be further packed in cardboard cartons each weighing not more than 25kg. The cartons shall be packed in waterproof boxes with crates so as to ensure no damage to electrodes during shipment and normal storage conditions.

9.2 Weight of each crate shall not exceed 1000kg.

9.3 Markings of packages shall be as per clause 3.6 of SFA-5.02.

10.0 TESTING AND CERTIFICATION:

10.1 Each consignment of electrodes supplied shall preferably be from one batch only.

10.2 Batch or lot classification shall be Class C1 as per SFA-5.01 filler metal procurement guidelines of ASME Sec IIC. (Latest edition).

10.3 The level of testing shall be Schedule K as per SFA-5.01 filler metal procurement guidelines of ASME Sec IIC. (Latest edition).

10.4 Three copies of original certified material test report in English signed by the manufacturer giving details of tests done in compliance with this WCPI and ASME Sec II C, SFA-5.1, E7018-1 shall be sent.

10.5 The manufacturer shall certify that supplies made against the batch conforms to the requirements of the latest edition (applicable on the date of issue of purchase order) of ASME Sec IIC SFA-5.1, E7018-1.

10.6 A copy of valid IBR approval certificate for the brand being supplied shall be sent along with every consignment.

10.7 Every packet supplied shall be exhibited with details in the below mentioned format through a seal or securely affixed label.

"Certified by ----------
(Mention the concerned IBR authority of the state)
Under periodic check test dated: XX-XX-XXXX.
Brand approval valid till : XX-XX-XXXX."

	BHARATH HEAVY ELECTRICALS LIMITED TIRUCHIRAPALLI-620 014 WELDING TECHNOLOGY CENTRE	WCPI – 012 Revision No.: 04 Date: 01.07.2014

WELDING CONSUMABLE PURCHASE INSTRUCTION FOR SAW WIRE AS PER ASME.SEC.II.C SFA-5.9,ER-410

1.0 GENERAL:

1.1 The wire shall comply with requirements specified in the latest edition and addenda (applicable on the date of issue of purchase order) of ASME Sec.II.C.SFA-5.9, ER-410. All tests, acceptance criteria shall be in accordance with this. Additional requirements specified in this document shall also be complied.

1.2 The wires shall be supplied in sizes and quantities as specified in the purchase order.

1.3 The wires are intended for over lay welding for high pressure boiler valves and its components.

2.0 CHEMICAL COMPOSITION:

The chemical composition of the wires shall conform to ASME SECII.C SFA-5.9, ER-410.

3.0 SIZE:

The wire shall be supplied in diameter 2.4mm or 2.5mm & 3.2 mm as specified in the purchase order. The tolerance on diameter shall be as per SFA-5.02. Net weight of each coil shall be 25Kg or 30 Kg.

4.0 FORM :

The wires shall be appropriately wound in coils with suitable liners and shall meet the clause 4.3.3 of SFA-5.02 with dimensions 450mm maximum OD, 300mm ID and 100 mm width. Alternatively wires shall be appropriately wound in basket rim B450 as per SFA-5.02.

5.0 FINISH & UNIFORMITY:

The wires shall meet the requirements of clause 12.1 and 12.2 of SFA-5.9.

6.0 WINDING REQUIREMENTS:

The Wires shall meet the requirements of clause 14 of SFA-5.9.

Prepared:	Reviewed & Approved:
Suraj N Engineer/ WTC	S. Singaravelu SDGM / WTC

7.0 IDENTIFICATION :

The wires shall meet the requirements of clause 4.5.2, 4.5.4 & 4.5.5 of SFA-5.02.

8.0 MARKING:

The wires shall meet the requirements of clause 4.6 of SFA-5.02.

9.0 PACKAGING:

9.1 The wire coils completely devoid of moisture or any other foreign material shall be adequately sealed in suitable cartons to ensure against any deterioration in the wire quality during transportation by sea or long duration storage.

9.2 The liners shall meet the requirements of 4.3.3 of SFA-5.02 or the basket rim shall meet the requirements of 4.3.4 of SFA-5.02.

9.3 The cartons shall be packed in waterproof boxes with crates so as to ensure no damage during shipment and normal storage conditions. Weight of each crate shall not exceed 1000kg.

9.4 The cartons shall have product information as per clause 4.6 of SFA-5.02

10.0 TESTING & CERTIFICATION:

10.1 Each consignment of wires supplied shall be from one batch only.

10.2 Batch /lot classification shall be Class S1 as per SFA-5.01 filler metal procurement guidelines of ASME Sec.II.C. (Latest Edition and Addenda).

10.3 The level of testing shall be Schedule J as per SFA-5.01 Filler metal procurement guidelines of ASME Sec.II.C. (Latest Edition and Addenda).

10.4 Three copies of original test certificates in English countersigned by the manufacturer giving details of the tests done in compliance with this purchase instruction and ASME Sec.II.C, SFA-5.9, ER410 shall be sent.

10.5 The testing authority shall certify that supplies made against the batch conform to the requirements of the latest edition and addenda (applicable on the date of issue of purchase order) of ASME Sec.II.C.SFA-5.9 ER410.

==========

	BHARATH HEAVY ELECTRICALS LIMITED **TIRUCHIRAPALLI-620 014** **WELDING TECHNOLOGY CENTRE**	**Doc. Number: WCPI – 013** **Revision No.: 04** **Date: 16/05/2013**

WELDING CONSUMABLE PURCHASE INSTRUCTION FOR SAW WIRE ASME.SEC.II.C SFA-5.9,ER-430

1.0 GENERAL:

1.1 The wire shall comply with requirements specified in the Latest Edition and Addenda (Applicable on the date of Issue of Purchase Order) of ASME Sec.II.C.SFA-5.9, ER-430. All tests, acceptance criteria shall be in accordance with this. Additional requirements specified in this document shall also be complied.

1.2 The Wires shall be supplied in sizes and quantities as specified in the Purchase Order.

1.3 The wires are intended for over lay welding for high pressure boiler valves and its components.

2.0 CHEMICAL COMPOSITION:

2.1 The chemical composition of the wires shall conform to ASME SECII.C SFA-5.9, ER-430.

3.0 SIZE:

3.1 The Wire shall be supplied in diameter 2.4, 2.5 & 3.2 mm and as specified in the purchase order. The tolerance on diameter shall be as per SFA-5.02. Net weight of each coil shall be 25/30 kg.

4.0 FORM :

4.1 The Wires shall be appropriately wound in coils with suitable liners and shall meet the clause 4.3.3 of SFA-5.02 with dimensions 450mm maximum OD, 300mm ID and 100 mm width. Alternatively Wires shall be appropriately wound in basket rim B450 as per SFA-5.02.

5.0 FINISH & UNIFORMITY:

5.1 The wires shall meet the requirements of clause 12.1 and 12.2 of SFA-5.9.

6.0 WINDING REQUIREMENTS:

6.1 The Wires shall meet the requirements of clause 14 of SFA-5.9.

PREPARED:	REVIEWED & APPROVED:
S. Singaravelu DGM / WTC	Dr. K. Asokkumar AGM/WTC

7.0 WINDING REQUIREMENTS:

7.1 The Wires shall meet the requirements of clause 14 of SFA-5.9.

8.0 IDENTIFICATION :

8.1 The Wires shall meet the requirements of clause 4.5.2, 4.5.4 & 4.5.5 of SFA-5.02.

9.0 MARKING:

9.1 The Wires shall meet the requirements of clause 4.6 of SFA-5.02.

10.0 PACKAGING:

10.1 The wire coils completely devoid of moisture or any other foreign material shall be adequately sealed in suitable cartons to ensure against any deterioration in the wire quality during transportation by sea or long duration storage.

10.2 The liners shall meet the requirements of 4.3.3 of SFA-5.02 or the basket rim shall meet the requirements of 4.3.4 of SFA-5.02.

10.3 The Cartons shall be packed in waterproof boxes with crates so as to ensure no damage during shipment and normal storage conditions. Weight of each crate shall not exceed 1000kg.

10.4 The cartons shall have product information as per clause 4.6 of SFA-5.02

11.0 TESTING & CERTIFICATION:

11.1 Each consignment of wires supplied shall be from one batch only.

11.2 Batch /Lot classification shall be Class S1 as per SFA-5.01 Filler metal procurement guidelines of ASME Sec.II.C. (Latest Edition and Addenda)

11.3 The Level of Testing shall be Schedule J as per SFA-5.01 Filler metal procurement guidelines of ASME Sec.II.C. (Latest Edition and Addenda)

11.4 Three copies of Original Test certificates in English countersigned by the manufacturer giving details of the tests done in compliance with this Purchase Instruction and ASME Sec.II.C, SFA-5.9, ER-430 shall be sent.

11.5 The Testing Authority shall certify that supplies made against the batch conform to the requirements of the Latest Edition & Addenda (Applicable on the date of issue of Purchase Order) of ASME Sec.II.C.SFA-5.9 ER-430.

==========

BHARATH HEAVY ELECTRICALS LIMITED TIRUCHIRAPALLI-620 014 WELDING TECHNOLOGY CENTRE	WCPI No.	: 307
	Revision	: 00
	Date	: 20.11.2013

WELDING CONSUMABLE PURCHASE INSTRUCTION FOR COBLAT BASE POWDER (TYPE-CoCrE) FOR PLASMA TRANSFERRED ARC WELDING

1.0 SCOPE:

This purchase instruction prescribes the requirements for cobalt base powder (Type-CoCrE) for Plasma Transferred Arc Welding (PTAW). The powder is to be used in PTAW machines for overlays of high pressure valve components.

2.0 GENERAL:

2.1 The powder shall be manufactured by inert gas dry atomization process and shall have spherically shaped powder particles suitable for PTAW.

2.2 The powder shall be supplied in quantities as mentioned in the purchase order.

3.0 CHEMICAL COMPOSITION:

The chemical composition of the powder shall meet requirements as given below.

Carbon	: 0.20-0.35%	Iron	: 2.0 % Max
Chromium	: 26.0-29.0%	Molybdenum	: 4.5-6.0 %
Silicon	: 2.0% Max	Cobalt	: Balance
Nickel	: 3.0% Max	Others	: 1.0% Max

4.0 PARTICLE SIZE:

The size of powder particles shall be 50 to 150 microns. Percentage of particles finer than 50 microns shall be less than 10%. Minimum size of fines permitted is 40 microns.

5.0 HARDNESS REQUIREMENTS:

The average hardness (at 20°C) of a two layer PTA weld deposited using the powder at thickness of 3 mm from the base metal shall be 20 –35 HRC (Preferably 30 HRC Maximum).

PREPARED:	APPROVED:
S.Singaravelu DGM/WTC	Dr.K.Asokkumar AGM/WTC

6.0 PACKAGING AND MARKING OF PACKAGES:

6.1 The powder shall be packed in airtight plastic/metallic containers that would provide adequate protection against moisture absorption preferably with the use of a suitable moisture absorbent gel/packet placed inside the container.

6.2 The net weight of each container shall not exceed 5 kg.

6.3 Container shall in turn be packed in wooden crates lined with waterproof material so as to ensure against damage during shipment. The net weight of each wooden crate shall not exceed 1000 kg.

6.4 Adhesive labels containing following product information legibly marked shall be securely affixed on each 5 kg container for easy identification.

a) Powder type: "PTA Powder CoCr-E".
b) Brand Name
c) Batch of manufacture
d) Date of manufacture
e) Net weight

7.0 CERTIFICATION AND TESTING:

7.1 Each consignment of powder shall preferably be from one batch/lot only.

7.2 Every batch shall be individually tested for compliance to this WCPI and three copies of original test certificates sent.

7.3 Test certificates shall contain details of test done for chemical analysis, particle size and hardness.

PURCHASE INSTRUCTION FOR ARC WELDING FLUX FOR STAINLESS STEEL OVERLAYS.

1.0 SCOPE:

1.1 The flux supplied shall meet the following requirements. The quantities shall be supplied as specified in the PURCHASE ORDER.

2.0 CHEMICAL COMPOSITIONS:

2.1 Specified chemical composition of the flux shall be as follows:

SiO_2 : 6.00-10.00
MnO : 35.00 Max
CaO : 10.00-15.00
Al_2O_3 : 45.00 Max.
CaF_2 : 25.00 Max.

3.0 USABILITY:

3.1 The flux is used for overlays on Valve seats in combination with ASW ER 410 and ER 430 wires.

3.2 The Basicity Index of the flux shall be 0.8 – 1.2.

3.3 The flux shall conform to the following mesh size 12 x 65 after Tyler.

3.4 The flux shall have very good slag detachability even in the rd hot condition.

3.5 The flux shall have very quick freezing characteristic to enable continuous welding of 8 passes in two layers.

3.6 The flux shall be dry and have very low sensitivity to moisture and contamination.

PREPARED:	APPROVED:
(R. GOPALAKRISHNA PILLAI) EXECUTIVE FOREMAN / WTC	(M. SUBRAMANI) SR. MANAGER/ WTC

4.0 PACKING AND STORAGE:

4.1 The flux shall be packed in humidity resisting manifold with plastic lining and airtight sealing. The packing shall be suitable to with stand transportation, handling and storage under normal condition.

4.2 The flux in the originals unopened package shall withstand storage under normal conditions for at least 12 month without affecting its welding characteristics or the weld properties.

4.3 Every bag shall contain the maximum quantity of 50 kgs.

4.4 The entire lot of each dispatch shall be made from one batch of flux.

5.0 MARKING:

5.1 The following information shall be legibly printed on the out side of each bag.

a) Brand Name

b) Mesh size

c) batch No & date of manufacture

d) Net weight

5.2 A tag/ label in the above information shall also be placed inside each bag.

6.0 TEST CERTIFICATE:

6.1 Individual test certificates shall be issued for every batch of flux. A batch is defined as the quantity produced from the same combination of raw materials under one production schedule.

6.2 The Test certificate shall contain chemical analysis. Basicity Index and mesh size for every batch of flux.

6.3 Three copies of test certificate shall be mailed for each batch of flux.

6.4 Prior approval shall be obtained from BHEL for any deviation of this PURCHASE INSTRUCTUION.

==========

ALL DIMENSIONS ARE IN MILLIMETRES.

FOR TOLERANCES OF UNTOLERANCED DIMENSIONS DURING MANUFACTURE REFER RELEVANT QCP/QP

REV	DATE	ALTERED	M.SRINIVASAN
03	31.03.08	CHD & APPD	P.BOOMINATHAN

DCP:800814

DRAWING CONVERTED INTO AUTOCAD.

CAUTION: The information on this document is the property of BHARAT HEAVY ELECTRICALS LTD. It must not be used directly or indirectly in any way detrimental to the interest of the company.

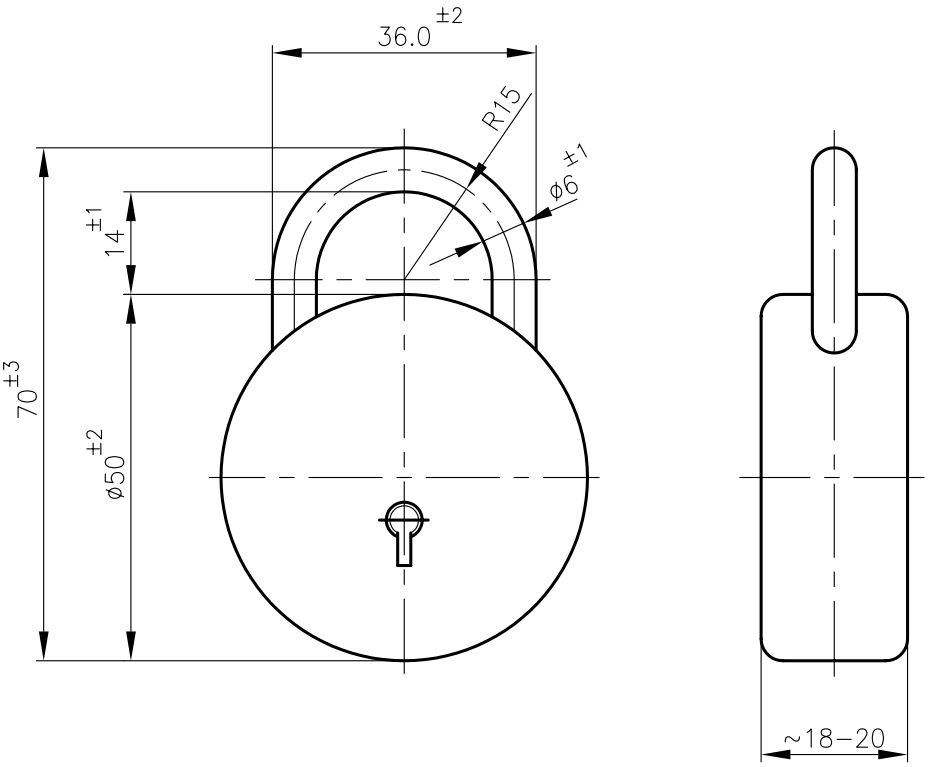

NOTES:

1. PAD LOCK SHOWN IN LOCKED POSITION.
2. TEST AND GUARANTEE CERTIFICATE NOT REQD.
   INSPECTION: TO CHECK THE DIMENSIONS AND TO CHECK WHETHER IT CLOSES & OPENS FREELY BY BOTH KEYS.

PAD LOCK SPECN.

6 LEVERS
RIVETLESS
MATERIAL:– BODY–BRASS
LEVER–BRASS
KEY –BRASS
No. OFF KEYS REQUIRED:– 2 NOS.

NO OFF	DESCRIPTION	MATL CODE	MATL SPECN	HEAT TREATMENT	SCRAP SORT	NET WT (kg)	GROSS WT (kg)	DRAWING No	ITEM No
–	–	–	–	–	–	–	–	–	–

BHARAT HEAVY ELECTRICALS LTD.,
UNIT: HIGH PRESSURE BOILER PLANT.
TIRUCHIRAPALLI 620014.
365–122

	NAME	SIGN	DATE	NO.OF VAR
DRN	T.R.RAMAMURTHY		23.10.76	
CHD	M.D.MURTHY		23.10.76	
APPD	A.V.NATHAN		23.10.76	

DEPT	SCALE	WEIGHT (KG).	REFERENCE INFORMATIONS	NO. OF ITEMS
VL	NTS	0.30	COMPONENT CODE:22 065 051 0000	
CODE 320			CAD:F409856	

TITLE	CARD CODE	DRAWING NO.	REV
PAD LOCK	U 01	4–V–S528–09856	03

Size A4

NAME PLATE FOR VALVES

0.0 SCOPE

This standard covers the requirements of Name Plate for valves.

1.0 SPECIFICATION AND REFERENCE STANDARDS

Dimensions and preferred sizes	Fig.1 and table 1 of this standard
Tolerance	Medium to IS: 2102
Material	Aluminium sheet of thickness 0.5 mm
BHEL Monogram	According to corporate standard AA 040 1120
Lettering style	Acc. to corporate standard AA 042 1403
Finish	See clause 2.1 of this standard
Technical delivery conditions	Acc. to clause 3.0 to 3.3.2 of this standard

2.0 FINISH

2.1 The Name plate shall be hard anodized according to IS: 6057 incorporating the matter as shown in the figure 1. The letters, space for data, BHEL monogram and border shall be finished bright white with black background.

3.0 TECHNICAL REQUIREMENTS

3.1 GENERAL

3.1.1 The surface shall be free of cracks, blisters and damages. Sharp edges shall be rounded off.

3.1.2 Samples of the name plate shall be obtained and tested in the laboratory for durability of the material, anodizing and weather proofness before bulk supply is effected.

COPYRIGHT AND CONFIDENTIAL

The information on this document is the property of BHARAT HEAVY ELECTRICALS LIMITED. It must not be used directly or indirectly in any way detrimental to the interest of the company.

3.2 MARKING. Back side of each name plate shall be marked with material code given by BHEL and with manufacturer's identification.

3.3 PACKING.

3.3.1 Before packing, each name plate shall be applied with transparent synthetic adhesive film.

3.3.2 Each name plate shall be suitably packed in polythene cover (500 microns thickness minimum) in order to avoid any damage to the surface during transit/storage etc.

4.0 DESIGNATION

A Name plate for valve of size 15x55 to this standard shall be designated as :

4.1 On drawings

a) Description column : NPL VALVES 15x55
b) Drawing number column : BPS 017522 1555
c) Material spec. column : Aluminium
d) Material code column : 22 074 165

4.2 Ordering description

For placing indents, issuing enquiries and on purchase orders, ordering description given below shall be followed.

Name plate for valves of size 15x55 to BPS 017522

5.0 ADDITIONAL INFORMATION

5.1 Copies of the following standards shall be enclosed along with purchase order.

a) BPS 017 522
b) AA 040 1120
c) AA 042 1403

5.2 The figure shown is for illustration only and supplier has to submit drawings to actual size for approval before effecting bulk supplies.

FIG. 1

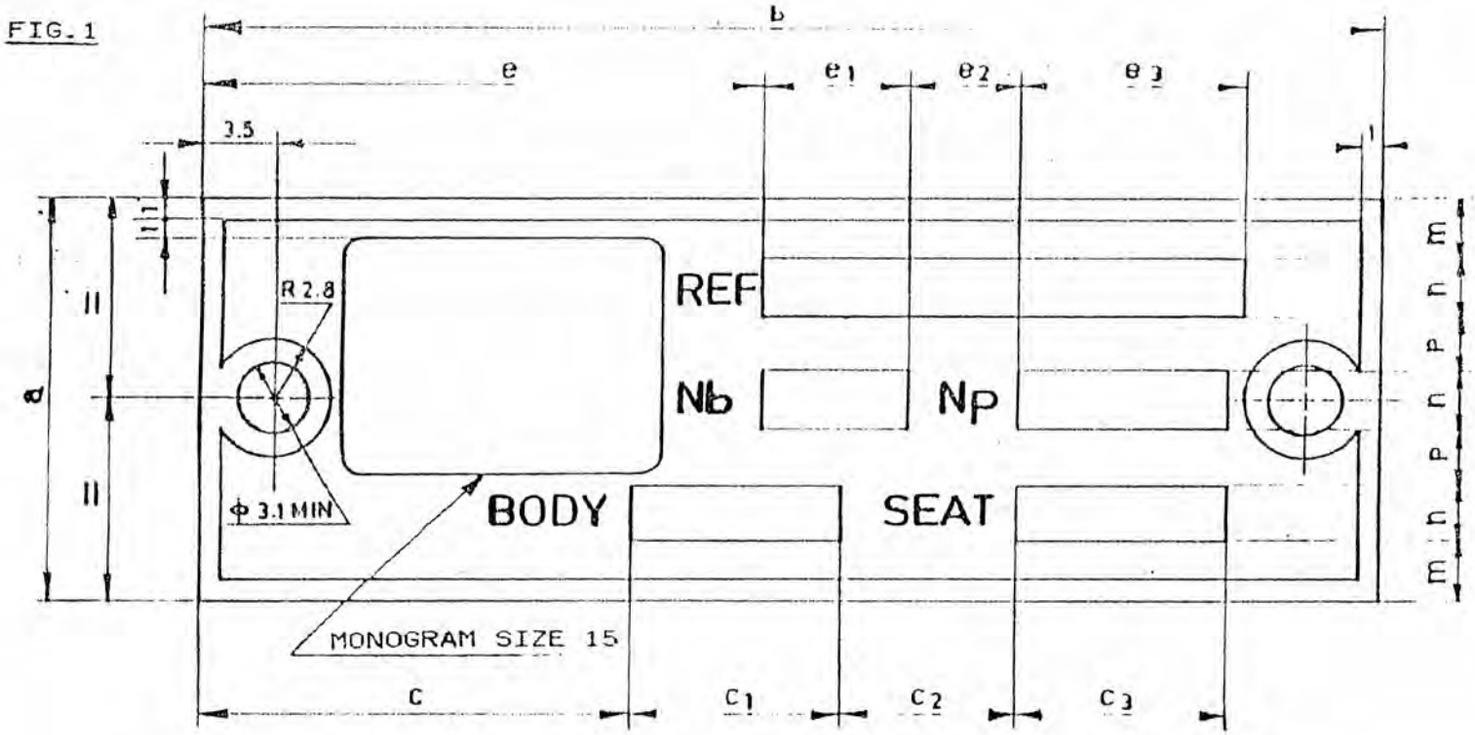

TABLE: 1 (ALL DIMENSIONS IN MILLIMETRES)

20 X 80	23	20	10	20	33	12	8	20.7	3	4	1	2	2	2.16
15 X 55	20	10	8	10	26	7	5	10.7	2	3	1	2	1.5	1.12
SIZE a x b	c	c_1	c_2	c_3	e	e_1	e_2	e_3	m	n	p	ENAMELLED	PUNCHED	≈WEIGHT/ 1000 IN Kg
												SIZE OF LETTERS		

PLANT STANDARD

HPBP TIRUCHIRAPPALLI

BPS 017522

Rev. No. 02

PAGE 3 OF 3

RATING PLATE-WALL DESLAGGER

0.0 SCOPE

This standard covers the requirements of Rating Plate for wall deslagger.

1.0 SPECIFICATION AND REFERENCE STANDARDS

Dimensions and preferred sizes	Fig.1 of this standard
Tolerance	Medium to IS: 2102
Material	CuSn37 HA,1.6 mm thick acc. to IS 410
BHEL monogram	Acc. to corporate standard AA 040 1120
Lettering style	Acc. to corporate standard AA 042 1403
Finish	See clauses 2.0 to 2.5 of this standard
Technical delivery conditions	Acc. to corporate standard AA 085 1411

2.0 FINISH

2.1 All rating plates shall be manufactured by etching and shall meet the following technical and other requirements.

2.2 TOP PORTION: All letters of the name of the company and monogram with border shall be raised and bright nickel plated. The background shall be etched and finished black (stoving enamel).

2.3 MIDDLE PORTION:

2.3.1 The following details of this portion shall be raised and bright nickel plated.

COPYRIGHT AND CONFIDENTIAL

The information on this document is the property of BHARAT HEAVY ELECTRICALS LIMITED. It must not be used directly or indirectly in any way detrimental to the interest of the company.

- All letters of the name of the equipment.

- All `pads' on which the rating particulars shall appear.

2.3.2 The following details of this portion shall be etched and finished black (stoving enamel).

- All letters, numerals etc. of the rating details appearing on the pads.

- All the dividing lines separating the pads from each other.

- Remaining area in the background

2.4 BOTTOM PORTION: All letters shall be raised and bright nickel plated. Remaining area in the background shall be etched and finished black (stoving enamel).

2.5 Border around the rating plate and the two dividing lines shall be raised and bright nickel plated.

3.0 DESIGNATION

A rating plate of size 180 mm length and 108 mm width to this standard shall be designated as :

3.1 On drawings

a) Description column : RATG PL-WB 180x108

b) Drawing number column : BPS 017204

c) Material spec. column : Brass

d) Material code column : 22 073 649

3.2 Ordering description

For placing indents, issuing enquiries and on purchase orders,ordering description given below shall be followed.

Rating plate - wall deslagger to BPS 017204

4.0 ADDITIONAL INFORMATION

4.1 Copies of the following standards shall be enclosed along with purchase order.

a) BPS 017 204

b) AA 040 1120

c) AA 042 1403

d) AA 085 1411

4.2 Material code shall be painted at the back of each piece.

4.3 The figure shown is for illustration only and supplier has to submit drawings to actual size for approval before effecting bulk supplies.

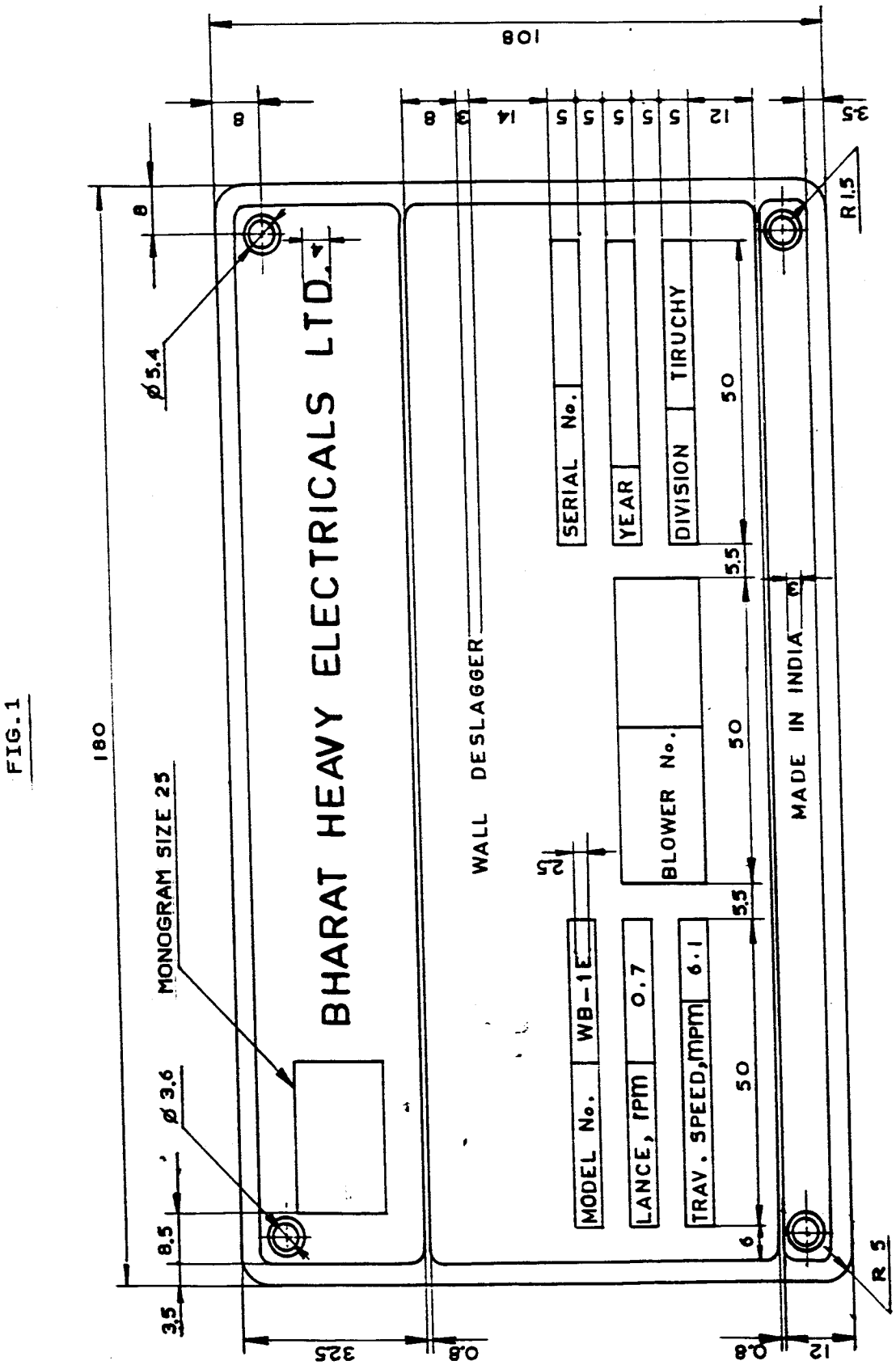
108
8
8
14
3
5
5
5
5
5
12
3.5
R1.5
8
ø5.4
BHARAT HEAVY ELECTRICALS LTD.
SERIAL No.
YEAR
DIVISION
TIRUCHY
50
5.5
WALL DESLAGGER
BLOWER No.
50
5.5
MADE IN INDIA
180
MONOGRAM SIZE 25
ø 3.6
8.5
3.5
MODEL No.
WB-1E
LANCE, rpm
0.7
TRAV. SPEED, mpm
6.1
50
6
R 5
32.5
0.8
0.8
12

FIG. 1

ALL DIMENSIONS ARE IN MILLIMETRES.

FOR TOLERANCES OF UNTOLERANCED DIMENSIONS DURING MANUFACTURE REFER RELEVANT QCP/QP

REV	DATE	
01	23.03.00	ALTERED K.P.LEON
		CHD & APPD

DIMENSION 80 WAS 75.
DIMENSION 25 INTRODUCED.
DIMENSION 35 WAS 30.
TRIM SPACING INCREASED BY 5mm.
REFER DCN:CS:1081

SIZE OF LETTERS		~Wt./1000 in kg.
ENAMELLED	PUNCHED	
2.0	1.5	4.43

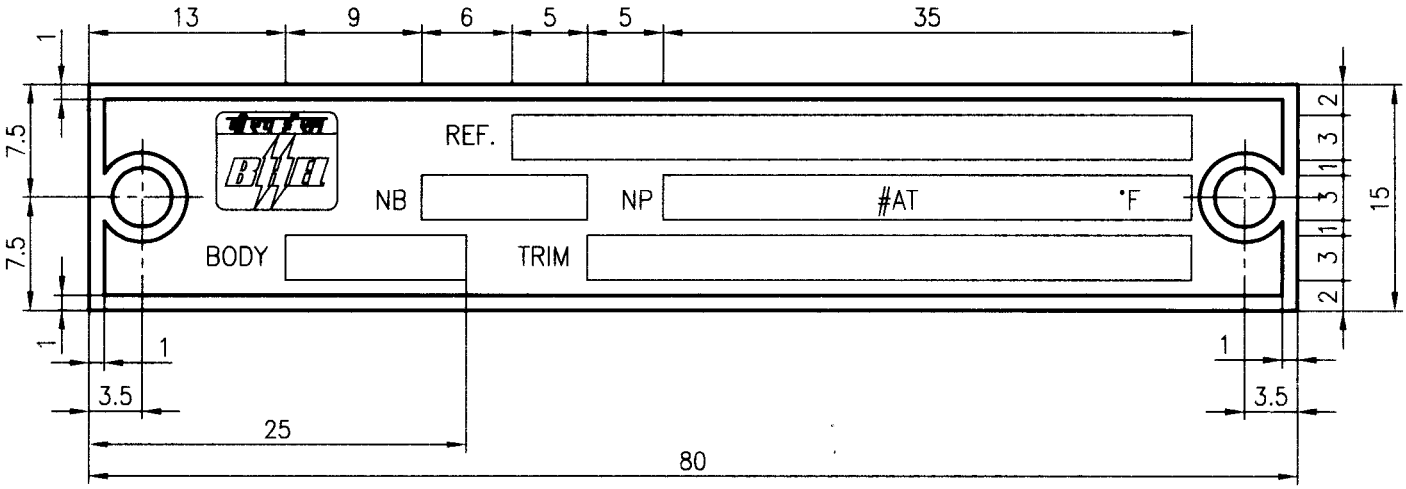

NOTES:

1. MATERIAL : 18/8 Cr.Ni. STEEL SHEET 0.5 mm THICK.
2. THE NAME PLATE SHALL HAVE RAISED BRIGHT POLISHED LETTERS. SPACES FOR DATA, EMBLEM AND BORDER ON ETCHED BLACK BACKGROUND.
3. THE MATERIAL OF WHICH THE BODY AND THE TRIM ARE MADE SHALL BE INDICATED BY CODES AS PER MSS-SP:25.
4. SCREW NAILS FOR FIXING NAME PLATES: SCREW NAILS SIZE 3 x 8 AS PER APPLICABLE STANDARDS.
5. THE NOMINAL BORE 'NB' WILL REPRESENT THE NOMINAL PIPE SIZE IN INCHES AND NOMINAL PRESSURE 'NP' WILL REPRESENT PRIMARY SERVICE PRESSURE IN (psig) AND CORRESPONDING SERVICE TEMPERATURE IN °F.
6. THE NAME PLATE SHALL BE CRACK-RESISTING SO THAT WHEN BENT THE ETCHING DOES NOT CRACK.
7. THE LOCATION OF THE NAME PLATE ON VALVES SHALL BE SPECIFIED BY THE DESIGNER.
8. AFTER FINALISING THE PURCHASE ORDER, SAMPLES OF THE NAME PLATE SHOULD BE TESTED IN THE LABORATORY FOR DURABILITY OF MATERIAL, ETCHING QUALITY ETC. BEFORE BULK SUPPLY IS EFFECTED.
9. THE EMBLEM SHALL BE BASED ON LATEST APPLICABLE STANDARDS.

NO OFF	DESCRIPTION	MATL CODE	MATL SPECN	HEAT TREATMENT	SCRAP SORT	NET WT (kg)	GROSS WT (kg)	DRAWING No	ITEM No
–	–	–	–	–	–	–	–	---	–

BHARAT HEAVY ELECTRICALS LTD.
UNIT: HIGH PRESSURE BOILER PLANT.
TIRUCHIRAPALLI 620014.
365-122

	NAME	SIGN	DATE
DRN	K.P.LEON		23.03.2k
CHD	T.R.R.MURTHY		23.03.2k
APPD	K.S.RAMAN		23.03.2k

NO.OF VAR

DEPT	SCALE	WEIGHT (KG).	REFERENCE INFORMATIONS	NO. OF ITEMS
VL	2:1	--	Component Code : 220746490000 CAD :C404047	
CODE 320				

TITLE	CARD CODE	DRAWING NO.	REV
NAME PLATE FOR VALVES (SS)	U 01	4-V-1373-04047	01

CAUTION: The information on this document is the property of BHARAT HEAVY ELECTRICALS LTD. It must not be used directly or indirectly in any way detrimental to the interest of the company.

CORPORATE DRG ID
TP-DG-4-V-1373-04047

ALL DIMENSIONS ARE IN MILLIMETRES.

FOR TOLERANCES OF UNTOLERANCED DIMENSIONS DURING MANUFACTURE REFER RELEVANT QCP/QP

REV	DATE	ALTERED
02	11.06.01	CHD & APPD

DRG.UPDATAED AND REDRAWN.

DCN: SB:1298

CAUTION: The information on this document is the property of BHARAT HEAVY ELECTRICALS LTD. It must not be used directly or indirectly in any way detrimental to the interest of the company.

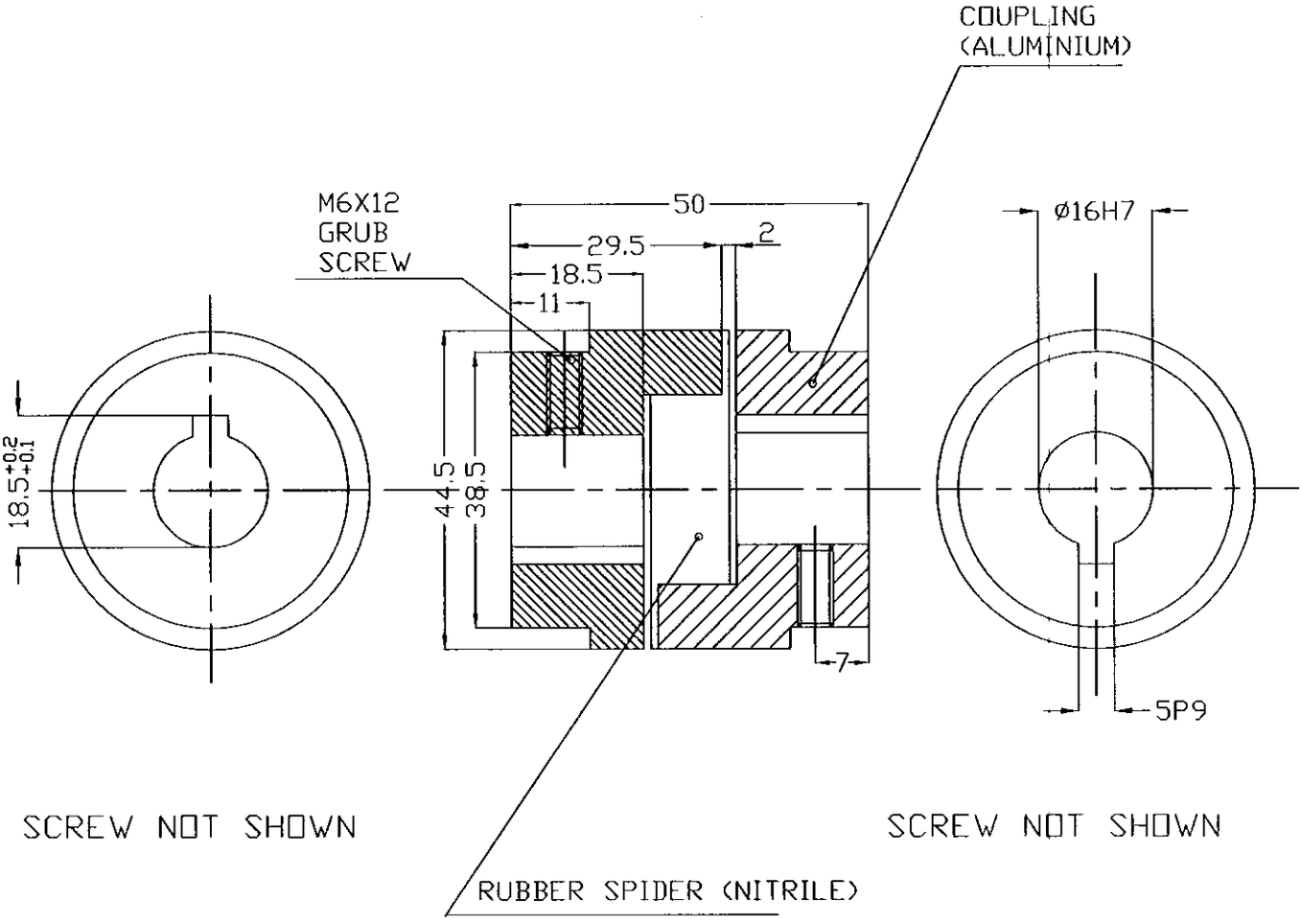

PART CODE : 961340910000

NO OFF	DESCRIPTION	MATL CODE	MATL SPECN	HEAT TREATMENT	SCRAP SORT	NET WT (kg)	GROSS WT (kg)	DRAWING No	ITEM No

BHARAT HEAVY ELECTRICALS LTD.,
UNIT: HIGH PRESSURE BOILER PLANT.
TIRUCHIRAPALLI 620014.
365-122

	NAME	SIGN	DATE
DRN	V.ARUMUGAM		
CHD	K.SRIDHARAN		
APPD	S.NATARAJAN		

NO.OF VAR

DEPT	SCALE	WEIGHT (KG).	REFERENCE INFORMATIONS	NO. OF ITEMS
SB	NTS	0.090	S 93491	
CODE 330				

TITLE	CARD CODE	DRAWING NO.	REV
COUPLING	U 01	4-20-201-00727	02

Size A4

COUPLING

01. Component : Flexible Coupling
02. Material code : 96 134 091 0000
03. Application : Used in wall deslaggers.
04. Specification :
    - 04.1. Type of Coupling : Disc type
    - 04.2. Material : Aluminium; Spider to be manufactured from nitrile compound shore 70 hardness.
    - 04.3. Power to be transmitted : 0.75 H.P. (0.56 KW)
    - 04.4. Operational Speed : 1440 rpm
    - 04.5. Max. Torque : 41 Kg. cm.
    - 04.6. Normal working hours : 30 minutes
    - 04.7. Class of duty : Intermittent shock load and reversing.
    - 04.8. Position of shaft to be connected : Horizontal
    - 04.9. Details of space limitations for assembly & dismantling :
      Total length of coupling should not exceed 50mm. Hub dia should not exceed 45mm.
    - 04.10. Key Dimension : 6x6x20. Tolerance as per IS 2048.
    - 04.11. Construction : As per drawing 4-20-201-00727.
    - 04.12. In case suppliers offer their standard coupling, it should be limited to the dimensions as per 4-20-201-00727. Drawing showing dimensions should be obtained from the supplier.
05. Packaging : To be packed and supplied in wooden boxes.
06. Approximate weight : 0.2 kg per piece.
07. Inspection :

    Inspection shall be carried out at BHEL works for :
    - 07.1. Checking dimensions, fit and workmanship as per drawing 4-20-201-00727.
    - 07.2. Checking whether hexagonal grub screws are provided.

DRAWING NO. 2-V-0000-07892

ALL DIMENSIONS ARE IN MILLIMETRES. FOR TOLERANCES OF UNTOLERANCED DIMENSIONS DURING MANUFACTURE REFER RELEVANT QCP / QP

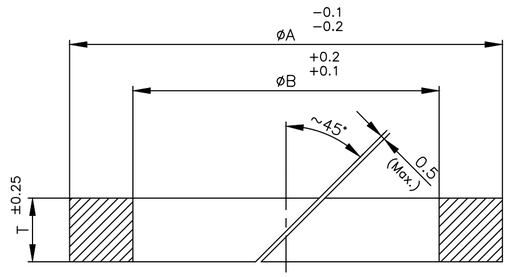

SL.NO.	Drawing Number	Component Code	ØA	ØB	T	WT (gm)	REMARKS
1	2-V-5903-07892/04	964569270000	15.83	9.53	5.60	1.50	GV-(1/4" To 3/4") -800
2	2-V-2230-07892/02	964650860000	16.00	8.00	4.00	2.00	3mm Pr. GAUGE VALVE
3	2-V-5713-07892/04	964569280000	17.40	11.10	4.80	1.50	SV-(1/4" To 3/4") -800 & BDV-1"-800
4	2-V-5904-07892/04	964569290000	19.00	11.10	6.40	2.60	GV-1"- 800
5	2-V-5714-07892/04	964569300000	19.00	12.70	6.40	2.20	SV-1"- 800
6	2-V-Y042-07892/02	964652250000	20.50	14.50	4.50	2.00	1/2",3/4"-C1500&C2500-Y TYPE
7	2-V-5906-07892/04	964569310000	23.75	14.28	4.80	3.00	SV/GV-(1.1/4" & 1.1/2") - 800
8	2-V-Y043-07892/02	964652260000	25.30	16.10	5.00	2.00	1"-C1500&C2500-Y TYPE
9	2-V-5907-07892/04	964569320000	25.35	15.88	4.80	3.20	SV/GV- 2" - 800
10	2-V-5732-07892/04	964569230000	32.40	14.45	6.40	7.00	SV/(1/4" To 1/2") -1500/2500
11	2-V-N081-07892/04	964568970000	32.50	19.10	6.00	5.00	2"150C,2"300C GV
12	2-V-5620-07892/04	964569330000	34.00	17.40	7.90	9.00	BDV- 1"-1500
13	2-V-N049-07892/04	964568990000	35.70	22.20	6.00	5.50	3"300C GV
14	2-V-N025-07892/04	964568980000	35.70	22.20	7.00	6.00	3"150C GV
15	2-V-Y045-07892/02	964652270000	38.00	25.55	6.40	6.00	1.1/2"-C1500&C2500-Y Type
16	2-V-N097-07892/04	964569010000	38.90	25.40	7.00	7.20	4"300C GV
17	2-V-N033-07892/04	964569000000	38.90	25.40	8.00	8.20	4"150C GV
18	2-V-V209-07892/03	964534640000	39.00	26.00	6.50	12.10	2-1/2"/2500 GV
19	2-V-2477-07892/04	964569090000	40.00	24.00	8.16	15.00	2"300C GLV
20	2-V-5734-07892/04	964569240000	41.17	17.40	11.90	21.00	SV/(3/4" & 1") -1500/2500
21	2-V-Y017-07892/02	964652280000	41.18	28.75	6.40	6.00	2" - C1500 & C2500 - Y Type
22	2-V-SHJA-07892/01	966000200000	42.23	22.23	10.00	13	1.5" - C3000spl
23	2-V-2478-07892/04	964569100000	44.00	28.00	8.16	16.00	3",4"300C GLV,3"600C GV
24	2-V-5990-07892/02	964650810000	44.50	31.80	6.40	8.10	IGV-2.1/2"-C3000 & Y047
25	2-V-N001-07892/04	964569020000	45.20	28.60	7.00	10.10	6"150C GV
26	2-V-0S30-07892/04	964534080000	46.00	30.00	8.00	12.70	2-1/2"/C1500,C2500 GNV
27	2-V-5610-07892/04	964569260000	46.70	27.15	9.50	17.50	BDV-1.1/2"-1500
28	2-V-SIJA-07892/01	966000110000	47.50	27.00	10.25	15	2" - C3000spl
29	2-V-0030-07892/04	964533830000	48.00	30.00	9.00	16.50	2-1/2"C1500,C2500 GV
30	2-V-V241-07892/03	964534650000	48.00	32.00	8.00	22.60	4"/2500 GV
31	2-V-N009-07892/04	964569030000	48.40	31.80	10.00	15.80	8"150C GV
32	2-V-N017-07892/04	964569040000	48.40	31.80	8.00	12.70	6"300C GV,4"900C GV
33	2-V-0032-07892/04	964533840000	50.00	32.00	9.00	17.40	3"/C1500,C2500 GV,2 -1/2"/C1500 GLV
34	2-V-B003-07892/04	964569220000	50.00	32.00	9.20	30.00	4"-600C GV
35	2-V-N089-07892/04	964569060000	51.60	34.90	8.00	13.70	8"300C GV
36	2-V-N057-07892/04	964569050000	51.60	34.90	10.00	17.00	10"150C GV
37	2-V-2480-07892/04	964569110000	52.00	36.00	8.16	20.00	6"300C GLV
38	2-V-0034-07892/04	964533850000	54.00	34.00	10.00	23.00	3"/C1500,2-1/2"/C2500,C3500 GLV
39	2-V-5737-07892/04	964569250000	55.40	27.15	13.50	40.00	SV/(1.1/4" To 2") -1500/2500
40	2-V-V081-07892/03	964534660000	55.00	36.00	9.50	36.30	6"/1500 GV , 5"/2500 GV
41	2-V-0036-07892/04	964533860000	56.00	36.00	10.00	24.00	4"/C1500,C2500,C2750,3"/C3500 GV
42	2-V-0S38-07892/04	964534090000	57.00	38.00	9.50	22.39	3"/C3500GNV
43	2-V-N041-07892/04	964569070000	57.90	38.10	12.00	27.00	12"150C GV
44	2-V-0040-07892/04	964533880000	59.00	40.00	9.50	23.40	4"/C2500 GNV,6"-C600 GV
45	2-V-0038-07892/04	964533870000	60.00	38.00	11.00	31.00	5"/C1500,C2500 GV,3"/C2500 GLV
46	2-V-C607-07892/04	964569360000	60.00	40.00	10.20	21.30	6"/900C GV,GVN
47	2-V-N065-07892/04	964569080000	61.10	41.30	9.00	22.00	10"300C,12"300C,14" -150C GV
48	2-V-2670-07892/04	964569120000	64.00	44.00	10.20	12.00	8"300C GLV,8"900C GV
49	2-V-N350-07892/04	964569130000	64.30	44.50	10.00	22.00	16"-150C, 14"-300C GV
50	2-V-0S46-07892/04	964534100000	65.00	46.00	9.50	26.16	5"/C1500 GNV
51	2-V-0042-07892/04	964533890000	66.00	42.00	12.00	40.70	4"/C1500,C2500 GLV
52	2-V-V129-07892/03	964534670000	67.00	48.00	9.50	45.90	10"/1500 GV, 8"/2500 GV
53	2-V-N436-07892/04	964569160000	67.50	47.60	10.00	60.00	16"-300C GV,10"600C-GV
54	2-V-0044-07892/04	964533900000	68.00	44.00	12.00	42.20	6"/C1500,C2500,C2750,C3500 GV,8"-C600 GV
55	2-V-C564-07892/04	964569350000	68.00	48.00	10.00	28.20	10"/900C GV
56	2-V-0046-07892/04	964533910000	72.00	46.00	13.00	52.20	
57	2-V-N224-07892/04	964569140000	73.80	50.80	12.00	41.00	20"-150C GV,12"-600C-GV
58	2-V-0048-07892/04	964533920000	74.00	48.00	13.00	54.00	8"/C1500 GV,10"-C600 GV
59	2-V-5962-07892/02	964650820000	76.20	31.50	22.20	140.00	Y-TYPE 2.1/2"-C2500
60	2-V-N437-07892/04	964569170000	77.00	54.00	11.00	80.00	20"-300C GV
61	2-V-0050-07892/04	964533930000	78.00	50.00	14.00	65.60	
62	2-V-P366-07892/03	964651880000	79.00	55.00	12.00	36.00	10"-C300-SV/RV
63	2-V-0052-07892/04	964533940000	80.00	52.00	14.00	67.60	8"/C2500,C2750 GV,12"-C600 GV
64	2-V-0S55-07892/04	964534110000	81.00	55.00	13.00	69.40	6/C3500 GLV,GNV
65	2-V-N361-07892/04	964569150000	83.30	57.20	13.00	48.00	24"-150C GV
66	2-V-0055-07892/04	964533950000	85.00	55.00	15.00	82.40	6"/C2500,C2750 GLV
67	2-V-NE96-07892/02	964652710000	86.50	60.325	14.00	90.00	22" - C300 - GV
68	2-V-P560-07892/02	964654130000	87.00	62.00	12.50	60.90	12" - C300 - RV
69	2-V-V161-07892/03	964534680000	88.00	62.00	13.00	112.00	14"/1500 GV, 12"/2500 GV
70	2-V-0058-07892/04	964533960000	90.00	58.00	16.00	99.00	10"/C1500 GV
71	2-V-0060-07892/04	964533970000	92.00	60.00	16.00	101.70	10"/C2500 GV
72	2-V-0062-07892/04	964533980000	94.00	62.00	16.00	104.40	12"/C1500 GV
73	2-V-NH51-07892/02	964654850000	96.00	70.00	12.70	60.00	16" - C300 - RV
74	2-V-V177-07892/03	964534690000	96.00	70.00	13.00	123.00	16"/1500 GV, 14"/3500 GV
75	2-V-0065-07892/04	964533990000	97.00	65.00	16.00	108.40	14"/C1500 GV
76	2-V-0070-07892/04	964534000000	102.00	70.00	16.00	115.10	12"/C2500 GV
77	2-V-N147-07892/02	964651770000	105.60	76.20	14.30	108.00	32" - C150
78	2-V-NH52-07892/02	964654950000	106.00	75.00	14.30	90.00	16" - C600 - RV
79	2-V-0075-07892/04	964534010000	107.00	75.00	16.00	121.80	16"/C1500, 14"/C2000 GV
80	2-V-C538-07892/02	964651810000	108.00	79.30	14.30	108.00	20" - C900
81	2-V-0080-07892/04	964534020000	112.00	80.00	16.00	128.50	18"/C1500,14"/C2500 GV,14"/C3500 GV
82	2-V-0090-07892/04	964534030000	122.00	90.00	16.00	141.80	20"/C1500, 18"/C2000, 16"/C2500 GV
83	2-V-NH99-07892/01	964656340000	121.40	82.60	19.00	212.50	36" - C150 GV
84	2-V-0100-07892/04	964534040000	132.00	100.00	16.00	155.30	20"/C2750 GV, 12"/C2000 ELB
85	2-V-0S10-07892/04	964534070000	140.00	100.00	20.00	250.90	18"/C2500 GV
86	2-V-0110-07892/04	964534050000	142.00	110.00	16.00	168.60	14"/C2500 SDNR
87	2-V-0120-07892/04	964534060000	158.00	120.00	19.00	262.40	16"/C2500 GNV
88	2-V-Y065-07892	966000710000	43.00	27.00	10.00	11.00	1.5/C2500 SV

NOTE :

1. Each ring shall be made of expanded graphite and supplied in braided form.
2. Compressed rings with Zinc dust corrosion inhibitor, to be compressed to a density of 1.35 to 1.45 gm/cm^3 (85 to 95 lbs/ft^3)
3. Packing shall be provided with a powdered zinc active corrosion–inhibiting treatement (2% Zn. by weight, minimum)
4. Leachable chloride – 50 ppm max.
5. Sulphur compounds (expressed as "S") = 100 ppm max.
6. Packings shall withstand the service conditions of
   6.1. Pressure – 615.0 kg/cm^2 max. &
   6.2. Temperature – 610°C max.

PACKING INSTRUCTION:

1. Packing rings shall be packed in polyethylene sheets, properly rolled and shall not open out during transport & storing.
2. Each pack shall contain printed/written letters listing the Drawing no., Code no., Dimension as indicated in Table and Suppliers name.
3. Drawing no., Code no. shall be readable and visible under packed condition.

REV	DATE	ALTERED	
18	07.07.16	CHD & APPD	DRS & KRS
ZONE	Notes Updated DCP : 802141		

REV	DATE	ALTERED	
17	24.06.16	CHD & APPD	DRS & KRS
ZONE	Table arranged in ascending order of dimensions. Two rows (SIJA & SHJA) included.		

REV	DATE	ALTERED	
19	24.08.20	CHD & APPD	S.MADHURAM SSC & KRS
ZONE	SL NO. 88 INCLUDED		

CAUTION: The information on this document is the property of BHARAT HEAVY ELECTRICALS LTD. It must not be used directly or indirectly in any way detrimental to the interest of the company.

–	–	–	–	–	–	–	–	–	–
No OFF	DESCRIPTION	MATL CODE	MATL SPECN	HEAT TREATMENT	SCRAP SORT	NET WT (kg)	GROSS WT (kg)	DRAWING No	ITEM No

TYPE OF PRODUCT
OR NAME OF
CUSTOMER/PROJECT

BHARAT HEAVY ELECTRICALS LTD.,
UNIT: HIGH PRESSURE BOILER PLANT.
TIRUCHIRAPALLI-620014.
365-120

	NAME	SIGN	DATE	NO.OF VAR.
DRN	M.SRINIVASAN		11.07.06	
CHD	K.S.RAMAN		11.07.06	
APPD	K.S.RAMAN		11.07.06	

DEPT	SCALE	WEIGHT (KG).	REFERENCE INFORMATIONS	NO. OF ITEMS
V L	NTS	REF. TABLE	CAD: F207892	
CODE 320				

TITLE	CARD CODE	DRAWING NO.	REV
PACKING RING (BULL RING)	U 01	2-V-0000-07892	19

Size A2

DRAWING NO. 2-V-0000-14882

ALL DIMENSIONS ARE IN MILLIMETRES. FOR TOLERANCES OF UNTOLERANCED DIMENSIONS DURING MANUFACTURE REFER RELEVANT QCP / QP

SL. No.	DRAWING NO.	COMP. CODE	ØA	ØB	T	WT. (gm)	Remarks
1	2-V-5903-14882/02	964527890000	15.83	9.53	5.60	1.30	3/4"-C800-GV
2	2-V-2230-14882/02	964650870000	16.00	8.00	4.00	1.10	3MM PGV
3	2-V-L826-14882/02	964608640000	16.00	9.00	3.50	0.90	6/300,3/900
4	2-V-5713-14882/02	964527880000	17.40	11.10	4.80	1.20	3/4"-C800-GLV
5	2-V-5904-14882/02	964527900000	19.00	11.10	6.40	2.20	1"-C800-GV
6	2-V-5714-14882/02	964525170000	19.00	12.70	6.40	1.80	1"-C800-GLV
7	2-V-9721-14882/02	964155570000	22.30	15.90	3.20	4.70	SV & SRV
8	2-V-L873-14882/02	964608010000	23.00	13.00	5.00	2.50	6/300
9	2-V-5906-14882/02	964527910000	23.75	14.28	4.80	2.40	1.1/2"-C800-GV&GLV
10	2-V-5907-14882/02	964527920000	25.35	15.88	4.80	2.60	2"-C800-GV&GLV
11	2-V-9905-14882/02	964155580000	28.70	19.10	4.80	13.10	SV & SRV
12	2-V-L916-14882/02	964608910000	29.00	16.00	6.50	5.40	8/300,10/300,10/600
13	2-V-L529-14882/02	964608980000	31.00	18.00	6.50	5.90	3/900
14	2-V-N081-14882/02	964562960000	32.50	19.05	6.00	5.90	2"-150C,2"-300C-GV
15	2-V-L858-14882/02	964608900000	33.00	20.00	6.50	6.30	12/150,12/300,16/150
16	2-V-5620-14882/02	964568950000	34.10	17.40	7.90	9.60	1"-C1500-BDV
17	2-V-N025-14882/02	964562970000	35.70	22.230	6.00	6.60	3"-150C,3"-300C-GV
18	2-V-9408-14882/02	964155550000	38.20	25.40	6.40	31.10	SV & SRV
19	2-V-N033-14882/02	964562980000	38.90	25.40	7.00	8.60	4"-150C,4"-300C-GV
20	2-V-V209-14882/02	964534580000	39.00	26.00	6.50	7.80	65/2500 GV
21	2-V-K214-14882/02	964561040000	40.00	24.00	8.16	11.80	4"150C,3"&4"300C,2"600C GV
22	2-V-SHJA-14882/01	966000190000	42.23	22.23	10.00	13.00	1.5" C3000SPL
23	2-V-L825-14882/02	964608630000	44.00	28.00	8.00	13.00	6"/C300
24	2-V-5990-14882/02	964650790000	44.50	31.80	6.40	8.80	Y047
25	2-V-N001-14882/02	964562990000	45.20	28.580	8.00	13.90	6"-150C-GV
26	2-V-L915-14882/02	964608890000	46.00	30.00	8.00	13.80	24"/150C,16,20"/300C,6"/600C
27	2-V-SIJA-14882/01	966000100000	47.50	27.00	10.25	15.00	2" C3000SPL
28	2-V-W049-14882/02	964533370000	48.00	30.00	9.00	17.90	65/1500 GATE
29	2-V-V241-14882/02	964534590000	48.00	32.00	8.00	14.50	100/2500 GV
30	2-V-N009-14882/02	964563000000	48.40	31.75	8.00	15.10	8"150C,6"300C GV
31	2-V-W425-14882/02	964564000000	50.00	32.00	9.00	18.80	80/1500 GV
32	2-V-N057-14882/02	964563010000	51.60	34.930	8.00	16.30	8"300C,10150C GV
33	2-V-K217-14882/02	964561070000	52.00	36.00	8.16	16.20	8"150C GV
34	2-V-G065-14882/02	964564030000	54.00	34.00	10.00	24.90	80/1500 SV
35	2-V-V081-14882/02	964534600000	55.00	36.00	9.50	23.20	150/1500 GV,125/2500 GV
36	2-V-K222-14882/02	964561120000	56.00	36.00	10.20	26.50	4"1500C GV
37	2-V-L857-14882/02	964608940000	57.00	38.00	9.50	24.20	12",16"/150C,12"/300C,14"/600C
38	2-V-N041-14882/02	964563020000	57.90	38.10	9.00	24.20	12"150C GV
39	2-V-L820-14882/02	964608950000	59.00	40.00	9.50	25.30	32/150,18/600
40	2-V-G145-14882/02	964532280000	60.00	38.00	11.00	33.50	80/2500 GLV
41	2-V-K218-14882/02	964561080000	60.00	40.00	10.20	28.80	10"150C GV,12'150C GV
42	2-V-N065-14882/02	964563030000	61.10	41.280	9.00	25.80	10"300C,12"300C GV
43	2-V-L889-14882/02	964608920000	63.00	44.00	9.50	27.30	16"/150C,14"/600C
44	2-V-K244-14882/02	964561420000	64.00	44.00	10.20	31.10	12"300C GV
45	2-V-N596-14882/02	964567780000	64.30	44.45	10.00	30.50	14"-C300,16"-C150 GV
46	2-V-R065-14882/02	964533680000	65.00	46.00	9.50	28.30	125/1500 GNV
47	2-V-R017-14882/02	964564010000	66.00	42.00	12.00	44.00	100/1500 RV
48	2-V-V129-14882/02	964534610000	67.00	48.00	9.50	29.30	250/1500 GV,200/2500 GV
49	2-V-N594-14882/02	964568060000	67.50	47.60	10.00	32.40	16"/C300
50	2-V-K219-14882/02	964561090000	68.00	44.00	12.25	46.60	6"150C GV,8"600C GV
51	2-V-N597-14882/02	964567790000	73.80	50.80	12.00	48.60	20"/C150 GV
52	2-V-K220-14882/02	964561100000	74.00	48.00	13.30	59.60	8"/1500C GV,10"/600C GV
53	2-V-N595-14882/02	964568070000	77.00	54.00	11.00	46.90	20"/C300
54	2-V-P366-14882/02	964651870000	79.00	55.00	12.00	54.60	10"300C GLV
55	2-V-W003-14882/02	964533100000	80.00	52.00	14.00	73.20	200/2500 GATE
56	2-V-R271-14882/02	964533690000	81.00	55.00	13.00	65.00	150/3500 GNV
57	2-V-N591-14882/02	964568050000	83.30	57.15	13.00	67.50	24"/C150
58	2-V-G002-14882/02	964532300000	85.00	55.00	15.00	89.10	150/2500 GLV
59	2-V-Z077-14882/02	964655130000	86.50	60.30	14.00	76.10	950/300 SCV
60	2-V-P560-14882/02	964654120000	87.00	62.00	12.50	65.80	12"300C RV
61	2-V-V161-14882/02	964534620000	88.00	62.00	13.00	71.70	350/1500 GV,300/2500 GV
62	2-V-W117-14882/02	964564020000	90.00	58.00	16.00	107.10	250/1500 GV
63	2-V-W004-14882/02	964532230000	92.00	60.00	16.00	110.00	250/2500 GV
64	2-V-P538-14882/02	964653170000	96.00	70.00	12.00	73.20	12"600C RV/16"300C RV
65	2-V-V177-14882/02	964534630000	96.00	70.00	13.00	79.30	400/1500 GV,350/3500 GV
66	2-V-W409-14882/02	964533620000	97.00	65.00	16.00	117.30	350/1500 GATE
67	2-V-W005-14882/02	964533280000	102.00	70.00	16.00	124.50	300/2500 GATE
68	2-V-N147-14882/02	964651760000	105.60	76.20	14.30	108.10	32"/150C
69	2-V-NH52-14882/02	964654940000	106.00	75.00	14.30	113.40	16"600C RV
70	2-V-W006-14882/02	964532340000	112.00	80.00	16.00	139.00	350/2500 GATE
71	2-V-W515-14882/02	964533260000	122.00	90.00	16.00	153.50	450/2000 GATE
72	2-V-NH99-14882/02	964656330000	121.40	82.60	19.00	212.50	36"/C150 GV
73	2-V-LB72-14882/01	964620700000	130.00	90.00	16.00	212.50	34"/C600 CRH
74	2-V-W077-14882/02	964533120000	132.00	100.00	16.00	167.90	500/2750 GATE
75	2-V-W073-14882/02	964533660000	140.00	100.00	20.00	271.40	450/2500 GATE
76	2-V-L081-14882/02	964533640000	142.00	110.00	16.00	182.40	350/2500 SCV
77	2-V-LA41-14882/02	964620380000	144.00	95.00	16.00	264.90	32/900
78	2-V-Y065-14882	966000720000	43.00	27.00	10.00	11.00	1.5"/C2500 SV

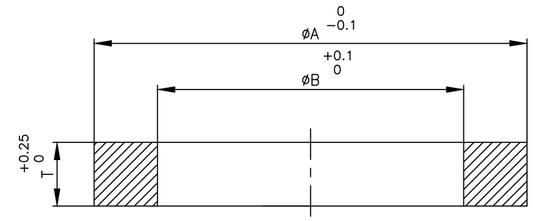

NOTE:

1. Rings shall be supplied in endless form.
2. Compressed grafoil ribbon pack with zinc dust corrosion inhibitor, to be compressed to the density of 1.6 to 1.8 gm/cm^3
3. Packing shall be provided with a powdered zinc active corrosion−inhibiting treatment (2% Zn. by weight minimum)
4. Leachable chloride content : 50 ppm max.
5. Sulphur compounds (expressed as "S") = 100 ppm max.
6. Packing shall withstand the service conditions of

   Pressure − 615.0. kg/cm^2 max. &
   Temperature − 610°C max.

PACKING INSTRUCTION:

1. Packing rings shall be packed in polyethylene sheets, properly rolled and shall not open out during transport & storing.
2. Each pack shall contain printed/written letters listing the Drawing No., Component Code No., Size and Supplier's Name.
3. Drawing No. Code No., shall be readable and visible under packed condition.

REV	DATE	ALTERED	
07	24.08.20	S.MADHURAM	CHD & APPD SSC & KRS
	SL NO. 78 INCLUDED		
06	13.07.16	DRS	CHD & APPD DRS & KRS
	Notes Updated DCP : 802141		
05	05.06.16	DRS	CHD & APPD DRS & KRS
	ROWS ARRANGED IN ASCENDING ORDER OF DIMENSION VALUES & 2 ROWS (SIJA & SHJA) INCLUDED.		
04	09.10.15	SSK	CHD & APPD SSK & KRS
	NH99 DIMENSIONS CORRECTED IN DWG DCP:802017		
03	23.01.15	JALAL	CHD & APPD SANKARAN
	SI No. 75 INCLUDED		
02	04.12.14	M.RAMESH	CHD & APPD SSK & KRS
	SI No. 74 INCLUDED		
01	19.04.14	MS	CHD & APPD SSK
ZONE	ZINC CORROSION−INHIBITOR 2% MIN. WAS 4% MIN. (NOTE−3) DCP:801733		

CAUTION: The information on this document is the property of BHARAT HEAVY ELECTRICALS LTD. It must not be used directly or indirectly in any way detrimental to the interest of the company.

No OFF	DESCRIPTION	MATL CODE	MATL SPECN	HEAT TREATMENT	SCRAP SORT	NET WT (kg)	GROSS WT (kg)	DRAWING No	ITEM No
–	–	–	–	–	–	–	–	–	–

TYPE OF PRODUCT
OR NAME OF
CUSTOMER/PROJECT

BHARAT HEAVY ELECTRICALS LTD.,
UNIT: HIGH PRESSURE BOILER PLANT.
TIRUCHIRAPALLI−620014.
365−120

	NAME	SIGN	DATE	NO.OF VAR.
DRN	S.SARANYA		11.02.14	
CHD	M.SRINIVASAN		11.02.14	
APPD	S.SATHEES		11.02.14	

DEPT	CODE	SCALE	WEIGHT (KG).	REFERENCE INFORMATIONS	NO. OF ITEMS
V L	320	NTS	REF. TABLE	CAD: F214882	

TITLE	CARD CODE	DRAWING NO.	REV
PACKING RING	U 01	2−V−0000−14882	07

Size A2

ALL DIMENSIONS ARE IN MILLIMETRES.

FOR TOLERANCES OF UNTOLERANCED DIMENSIONS DURING MANUFACTURE REFER RELEVANT QCP/QP

REV	DATE	ALTERED
		CHD & APPD

ø840–d13	–1.720
	–0.320
ø782–D13	+1.540
	+0.290

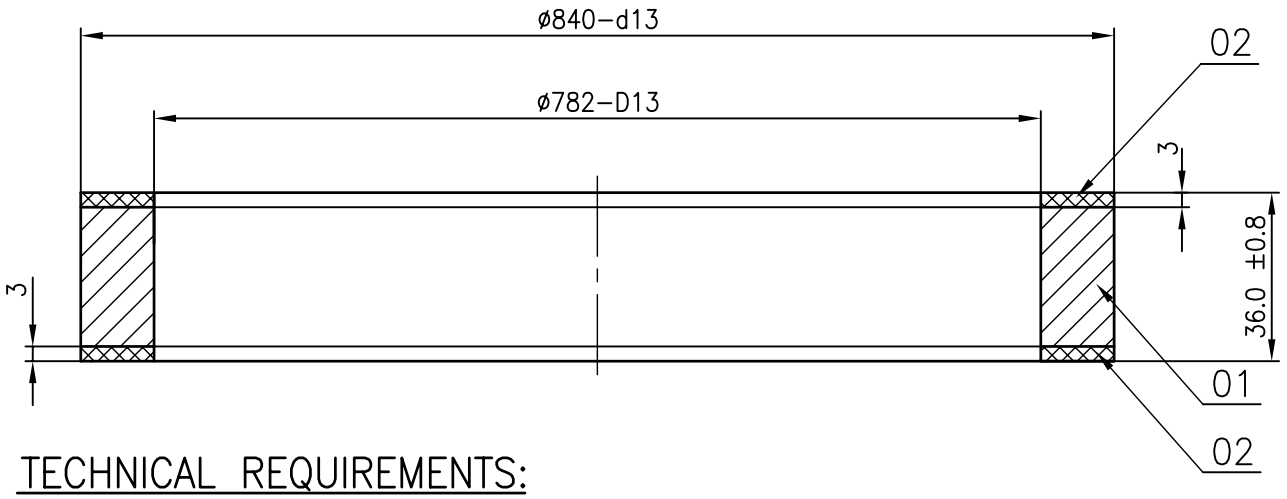

TECHNICAL REQUIREMENTS:

1. GASKET DENSITY (WITH WIRE MESH): 2.2±0.09 gm/cm^3
   GASKET DENSITY (WITHOUT WIRE MESH): 1.65±0.09 gm/cm^3
2. LEACHABLE CHLORIDE CONTENT NOT TO EXCEED 20PPM
3. GRAPHOIL GASKET TO BE PROVIDED WITH INCONEL MULTILAYERED WIRE MESH WITH WIRE DIA. OF 0.15mm & WITH A MESH SIZE OF 355x100 MICRONS AS PER IS:1568
4. ASH CONTENT CONSISTING OF TRACE ELEMENTS IN OXIDE FORM SHALL NOT EXCEED 2% MAX.
5. PERCENTAGE LOSS AT 600°C: 10 MAX.
6. PERCENTAGE OF WATER SOLUABLE: 0.1 MAX.
7. TEST CERTIFICATES TO BE PRODUCED FOR DIMENSIONS AND POINTS 1,2,3,4,5 & 6 AS MENTIONED ABOVE.
8. GASKETS ARE TO BE DESPATCTED IN HARDBOARD BASKETS. TOP AND BOTTOM SIDES OF GASKETS ARE TO BE PROTECTED BY PLYWOOD.

ITEM No.	MATERIAL
01	GRAPHOIL
02	INCONEL

NO OFF	DESCRIPTION	MATL CODE	MATL SPECN	HEAT TREATMENT	SCRAP SORT	NET WT (kg)	GROSS WT (kg)	DRAWING No	ITEM No
–	–	–	–	–	–	–	–	–	–

BHARAT HEAVY ELECTRICALS LTD.,
UNIT: HIGH PRESSURE BOILER PLANT.
TIRUCHIRAPALLI 620014.
365–122

	NAME	SIGN	DATE	NO.OF VAR
DRN	M.SRINIVASAN		07.03.07	
CHD	P.BOOMINATHAN		07.03.07	
APPD	M.RAJAKUMAR		07.03.07	

DEPT	SCALE	WEIGHT (KG).	REFERENCE INFORMATIONS	NO. OF ITEMS
VL	NTS	4.7	COMPONENT CODE: 96 465 224 0000	
CODE 320			CAD : F426688	

TITLE	CARD CODE	DRAWING NO.	REV
SEALING RING (PRE FORMED GRAFOIL)	U 01	4–V–3245–26688	

Size A4

CAUTION: The information on this document is the property of BHARAT HEAVY ELECTRICALS LTD. It must not be used directly or indirectly in any way detrimental to the interest of the company.

ALL DIMENSIONS ARE IN MILLIMETRES.

DRAWING NO. 3-20-001-01855

NOTE: FOR DIMENSIONS REFER TABLE BELOW

TYPE	φ D (mm)		d (mm)		Material	Temp °C		Wt / 1000 in kg	Material code	Shore Hardness
	Basic	Tol.	Basic	Tol.		Normal during Appln.	Short period of 48 Hours.			
A	20.6	±0.15	2.30	±0.1	Nitrile	121	149	4.5	96 353 090 0000	75 ± 5
A	94.0	±0.4	5.30	±0.15	Viton	204	315	12.88	96 353 060 0000	75 ± 5
A	97.0	±0.4	5.30	±0.15	Viton	204	315	13.27	96 353 061 0000	75 ± 5
B	21.8	±0.15	3.50	±0.1	Nitrile	121	149	6.5	96 353 307 0000	75 ± 5

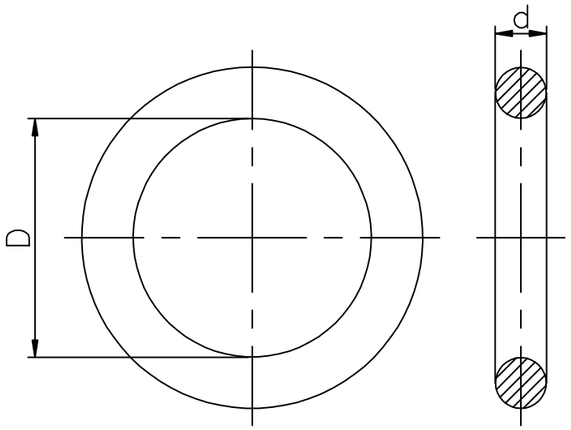

TYPE–'A'

NOTES:

01. O-RINGS ARE TO BE STORED UNDER COVERED AREA.

02. EXPOSING TO ATMOSPHERE WILL DAMAGE THE MATERIAL.

03. TO BE PACKED AND DESPATCHED IN CARD BOARD / WOODEN BOXES.

04. FOR QUALITY REQUIREMENTS REFER LATEST APPLICABLE QUALITY PROCEDURES.

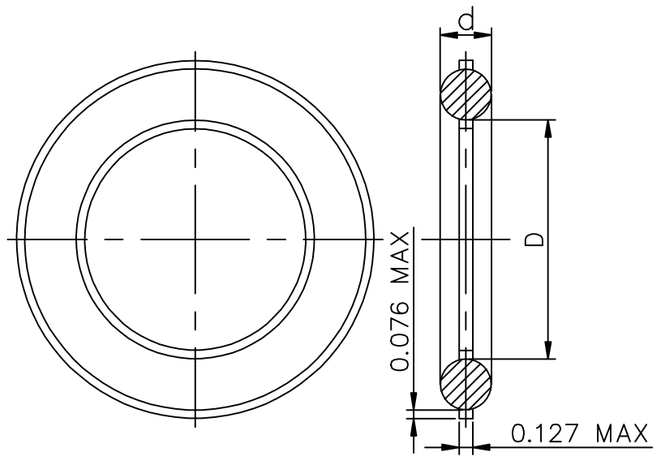

TYPE–'B'

THIS DRAWING REPLACES SPECIFICATION TSB:022

NO OF	DESCRIPTION	MATL CODE	MATL SPECN	HEAT TREATMENT	SCRAP SORT	NET WT (kg)	GROSS WT (kg)	REMARKS	ITEM No

TYPE OF PRODUCT
OR NAME OF
CUSTOMER/PROJECT

BHARAT HEAVY ELECTRICALS LTD.,
UNIT: HIGH PRESSURE BOILER PLANT.
TIRUCHIRAPALLI-620014.
365-126

	NAME	SIGN	DATE	NO.OF VAR.
DRN	J.SANKAR	J.S	24.09.10	
CHD	K.SRIDHARAN	K.S	24.09.10	
APPD	K.SRIDHARAN	K.S	24.09.10	

REV	DATE	ALTERED
		CHD & APPD

CAUTION: The information on this document is the property of BHARAT HEAVY ELECTRICALS LTD. It must not be used directly or indirectly in any way detrimental to the interest of the company.

DEPT SB
CODE 330
SCALE NTS
WEIGHT (KG).
REFERENCE INFORMATIONS
NO. OF ITEMS

TITLE **`O' RINGS**
CARD CODE U 01
DRAWING NO. 3-20-001-01855
REV 00

Size A3

1.0 MATERIAL SPECIFICATION - Elastomer materials of grade specified in P.O.or drg. The property requirements are as given in Table-1.

2.0 GENERAL

These Elastomeric compounds are for use as O-rings/ packing in water and oil based drilling fluids, seawater, petroleum based lubricants and ethylene glycol anti-freeze mixtures.
Shall be manufactured to the relevant size in the drawing.
The grade nos. specified correspond to the Standards of M/s National; USA.

3.0 ENGINEERING REQUIREMENTS

MATERIAL PROPERTIES: The property requirements for the elastomers are given in table-1.
The hardness tests shall be carried out as per D2240/ D1415 and tensile tests as per D412/D1414(as per D1457 for PTFE materials).Additional property requirements for grades MS-447 & MS 452 (tested as per D621) are as follows.

	MS 447	MS 452
Coefficient of thermal expansion (in/in/ Fx10-5) at 75 to 300°F	6.0+ 0.5	7.6+0.5
% deformation under load (max.)(24 Hours at 2000 psi at 70°F Min).	5.0	3.5
% permanent deformation (max.) after load release	2.0	2.2

4.0 INSPECTION & TESTING

The dimensions on the finished product shall conform to the relevant drawing.
Sampling inspection shall be carried out for visual, dimensions & hardness as per Cl.8.0.
The following type tests shall be carried out for conformance to this specification:

TYPE TESTS

AIR AGING TEST : This test shall be carried out in an Air oven (ASTM D573) or by heating in air in a test tube enclosure (ASTM D865).The purpose of this test is to determine the influence of elevated temperatures on the physical properties of vulcanized rubber.
The test shall be carried out at Minimum test temperature shown in table-2 for each grade for 70 hrs. in accordance with ASTM D412 and properties after air aging test shall conform to table-2.

COMPRESSION SET TEST :This test shall be carried out in accordance with ASTM D395 B i.e. Compression set under constant deflection in air with exceptions listed out in ASTM D1414 Cl.10.0
The test shall be performed at a minimum test temperature indicated in table-2 for 70 hours, except for Grade MS 225. For grade MS:225, the test duration shall be 22 hours.
The maximum permanent compression set shall comply to table-2.

LOW TEMPERATURE BRITTLENESS TEST : This test ensures that rubber will not exhibit fracture when subjected to specified impact conditions. The Test shall be carried out in accordance with ASTM D2137/D746 and shall PASS at the test temperature indicated in table-2.

IMMERSION TEST : This test ensures the ability to withstand the effect of liquids and shall be carried out in accordance with ASTM D471/D1414.
The liquids used for the test shall be ASTM Oil 1&3 at a minimum temperature indicated in Table-3 for various grades and Distilled water at a minimum temperature of 212oF for a period of 70 hrs.
Permissible variation in properties after immersion in liquids are given in Table- 3.
Immersion test is not applicable for grades MS 447 & MS 452.

VALIDITY : The validity of these Type test results is for two years from the date of test,in the case of PSL 1,2 & 3. However, in case of PSL 4,this test shall be carried out for each batch of purchase order.
The type test shall be conducted at approved laboratory or witnessed by BHEL.

5.0 SPECIAL REQUIREMENTS

Insert ring shall be positioned as shown in BHEL drawing or the drawing approved by BHEL.
After Moulding, all parts must be inspected by the vendor/manufacturer to ensure proper positioning of the insert ring. The NDE to be followed can be RT/MT and meet the requirement indicated in the drawing.
The ring must be generally located in the web of the seal, but in no case,in flexible lip of the seal.
No part of the ring shall be visible to the naked eye unless it is specified in the drawings.

6.0 DOCUMENTATION

For PSL 1,2 & 3: Certificate of compliance which indicates P.O.No, Drg No,Material grade & type tested compound no, Batchwise Cure/mould date & Shelf life(expiry date) shall be submitted.

For PSL 4 : Test certificates for the physical properties ,in addition to certificates mentioned above shall be submitted for each P.O.

7.0 MARKING AND PACKING

Each item shall be packed in polythene cover individually with suitable preservants like French chalk powder with label having following details.

(a) Drg. Number & size (b) Purchase Order No. (c) Batch Number
(d) Compound No. (e) Date of Cure/Mould (f) Shelf life (expiry date)
(g) Any other relevant details specified in the Purchase Order/drawing.

Each item shall be supplied in sturdy carton boxes to protect against permanent distortion during shipment and storage and from sunlight, dust etc. during shipment and storage. Each box shall contain only one size and lot of the product as given below.

(1) Size more than 6" -- each separate box (2) Size 2" to 6" -- 5 nos.in one box
(3) Size below 2" -- 10 nos.in one box.

Each box shall also be labeled with details specified above viz (a) to (g) above.

8.0 SAMPLING PLAN:for elastomeric compounds based on MIL-STD-105(latest) single sampling normal inspection.

Lot size	Sample size	Acceptance/Rejection criteria
26 to 50	8	No defect permitted
51 to 90	13	-do-
91 to 150	20	Accept when no. of defect < 1; Otherwise reject
151 to 280	32	-do-
281 to 500	50	Accept when no. of defect < 2; Otherwise reject

For lot size 25 Nos. & below, 100% inspection shall be done.

TABLE-1 PROPERTY REQUIREMENT OF ELASTOMERS

Elastomer Grade		MS-219	MS-220	MS-221	MS-225	MS-231	MS-233	MS-426	MS-427	MS-428	MS-430	MS-431	MS-447	MS-452
Material		NBR	NBR	NBR	NBR	FKM	FKM	TFEP	TFEP	FVMQ	HSN	XNBR	PTFE	PTFE
Hardness	Value	60+5	70+5	90+5	70+5 -5	90+5	70+5	90+10	80+5	85+10	80+5	70+5	65+5	63+5
	Type	(A)	(A)	(A)	(A)	(A)	(A)	(A)	(A)	(A)	(A)	(A)	(D)	(D)
Applicable	Min.	0	-20	-20	32	0	-20	-20	-20	-50	-20	-20	-50	-50
Temp. Range(oF)	Max.	180	180	180	200	250	250	250	250	250	250	180	250	250
Tensile strength in Psi (min)		2000	2000	2500	2000	1600	1500	2200	2000	1000	2500	2000	1500	1000
Ultimate elongation % (min)		500	300	200	350	100	100	100	100	150	150	300	75	75
Tensile modulus (psi)at 100% elongation (min)		200	400	800	600	500	500	-	1000	500	500	400	-	-
Tensile modulus (psi)at 50% elongation (min)		-	-	-	-	-	-	1500	-	-	-	-	-	-
Shelf life in years		2	2	2	2	4	4	4	4	4	2	2	10	10

NBR - Nitrile FVMQ - Fluoro Silicone (Silastic LS) FKM - Fluoro carbon(VITON,FLUOREL)
HSN - Hydrogenated Nitrile TFEP - Tetra fluoro ethylene & Propylene(AFLAS) XNBR - Carboxylated Nitrile
PTFE - Teflon (W/25% carbon/graphite filler)-MS447 ; PTFE - Teflon (W/RYTON/MoS2/Carbon filler)-MS452

TABLE-2 : AIR AGING, COMPRESSION AND LOW TEMPERATURE BRITTLENESS TEST REQUIREMENTS

Grade	(*) Min. Test Temp °F	AIR AGING TEST — Acceptable variation in: Hardness points	Tensile Strength(%)	Ultimate Elongation(%)	Volume (%)	COMPRESSION TEST RESULT (Compression set) in (%) max	TEST TEMP. FOR LOW TEMPERATURE BRITTLENESS TEST.
MS 219	180	+ 05	+ 10	+ 20	+ 10	40	0°F
MS 220	180	+ 10	+ 15	+ 20	+ 05	30	0°F&-20°F
MS 221	180	+ 05	+ 10	+ 30	+ 10	25	0°F&-20°F
MS 225	212	+ 10	+ 10	+ 20	+ 10	40	32°F
MS 231	250	+ 10	- 40max	- 20max	+ 10	40	0°F
MS 233	250	+ 10	- 40max	- 20max	+ 10	40	0°F&-20°F
MS 426	250	+ 10	+ 10	+ 15	+ 10	30	0°F&-20°F
MS 427	250	+ 10	- 25	- 25	-	40	0°F&-20°F

MS 428	250	+ 05	+ 10	+ 10	+ 10	30	0°F,-20°F, -50°F&-75°F
MS 430	250	+ 10	+ 10	+ 20	+ 10	30	0°F&-20°F
MS 431	180	+ 05	+ 15	+ 20	+ 10	35	0°F&-20°F
MS 447	-	-	-	-	-	-	0°F,-20°F & -50°F
MS 452	-	-	-	-	-	-	0°F,-20°F & -50°F

(*) Min. test temperature is same for both air aging test & compression test

TABLE-3 : IMMERSION TEST REQUIREMENT

Grade	Min Test temp. °F (*)	Permissible variation in properties (+) with ASTM Oil # 1 Hardness	Tensile strength	Ultimate Elongation	Volume	ASTM Oil # 3 Hardness	Tensile strength	Ultimate Elongation	Volume	Distilled water Hardness	Tensile strength	Ultimate Elongation	Volume
MS219	180	05	10	20	10	10	20	15	20	05	15	20	10
MS220	180	10	20	20	10	10	20	20	10	10	20	20	10
MS221	180	05	15	30	10	05	15	30	10	05	15	10	05
MS225	212	05	05	10	05	05	05	10	10	-	-	-	-
MS231	250	05	15	10	05	05	10	10	05	05	20	10	10
MS233	250	05	15	10	05	05	10	10	05	05	20	10	10
MS426	250	10	15	20	10	10	15	20	20	10	15	20	10
MS427	250	05	15	25	10	10	20	25	10	05	15	20	10
MS428	250	05	15	10	10	10	20	10	30	05	10	10	10
MS430	250	10	10	20	10	10	10	20	10	05	10	10	10
MS431	180	10	20	20	10	10	20	20	10	-	-	-	-

*Min.test temp. specified is only for immersion test with ASTM Oil #1 & 3. For distilled water,the test temp. is 212°F.

NOTE: Values indicated in Table are % values, except for Hardness. For hardness,it is variation in absolute value.

Revision record:

Rev:00/16.04.90 : First issue

Rev:01/04.12.93 : Editorial corrections

Rev:02/15.11.96 : Elastomer TDCs 5:131,135,154,155,156,157,161,162,163,179,183 & 184 merged & rewritten

G.Janakiraman	K.Nagarajan	M.Palanivel	R.Gurunathan	A.L.Nagarajan	C.R.Raju
Qual. Assurance	Engg/Valves	Purchase/Valves	Quality Control	Quality assurance	Qual Assurance
Prepared by		**Reviewed by**			**Approved by**

ALL DIMENSIONS ARE IN MILLIMETRES. FOR TOLERANCES OF UNTOLERANCED DIMENSIONS DURING MANUFACTURE REFER RELEVANT QCP / QP.

DRAWING NO. 3-V-5192-23485

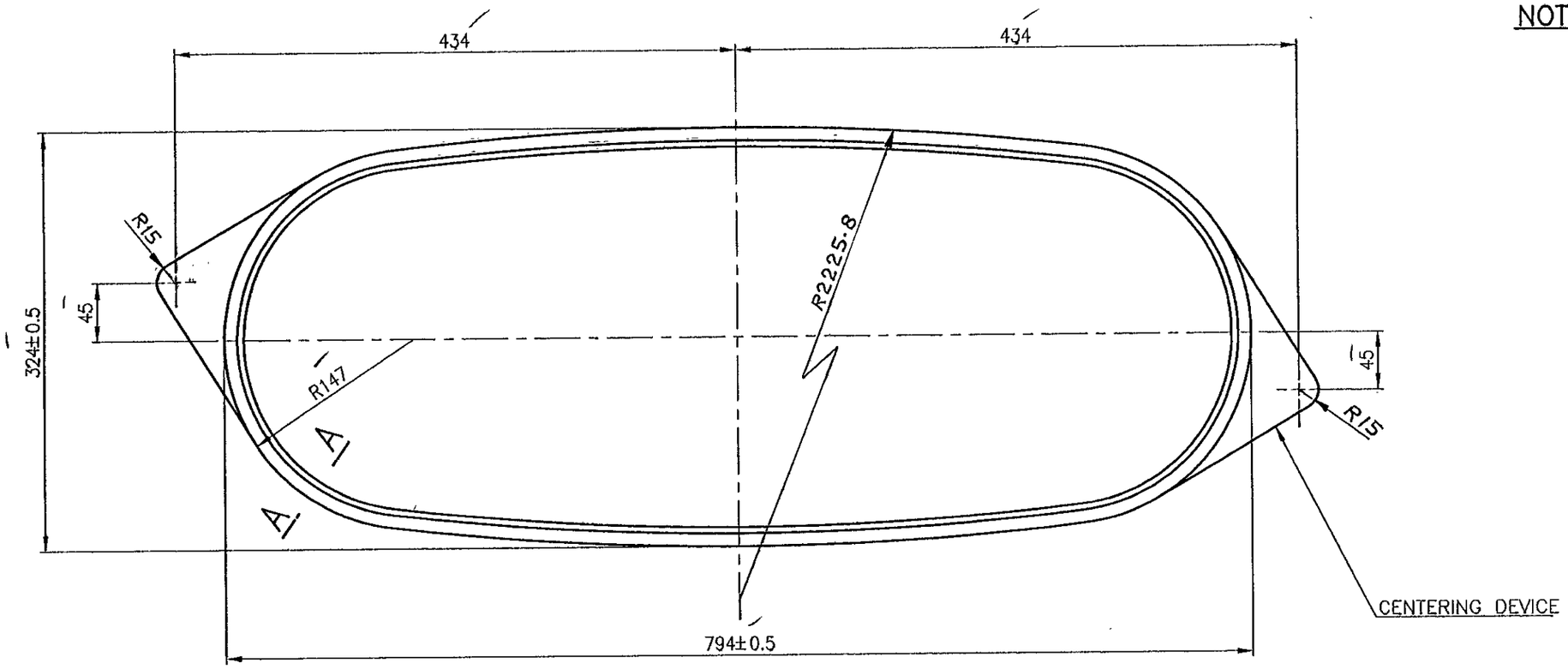

NOTES

1. SPIRAL WOUND GASKET SHALL WITHSTAND A SERVICE PRESSURE 30Kg/cm^2 AND SERVICE TEMP. RANGE – 45°C TO 427°C
2. FOR PURCHASE SPECN. OF THIS GASKET REFER LATEST APPLICABLE QUALITY PROCEDURE
3. MATERIAL: SPIRAL WOUND GRAFOIL FILLED WITH AISI 316.
4. INNER RING OF 316 STAINLESS STEEL SHALL BE PROVIDED.

SECTION AA

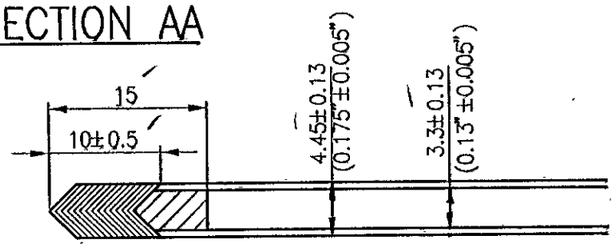

NO OFF	DESCRIPTION	MATL CODE	MATL SPECN	HEAT TREATMENT	SCRAP SORT	NET WT (kg)	GROSS WT (kg)	DRAWING No	ITEM No
	-	96453653				0.46			

TYPE OF PRODUCT
OR NAME OF
CUSTOMER/PROJECT

BHARAT HEAVY ELECTRICALS LTD.,
UNIT: HIGH PRESSURE BOILER PLANT.
TIRUCHIRAPALLI-620014.
365-121

	NAME	SIGN	DATE	NO.OF VAR.
DRN	V.BAIRAVAN		10/7/99	
CHD	R.L.NARAYANAN		12/7/99	
APPD	M.RAJAKUMAR		12/7/99	

DEPT	SCALE	WEIGHT (KG).	REFERENCE INFORMATIONS	NO. OF ITEMS
VL	NTS			
CODE 320				

TITLE: SPIRAL WOUND GASKET

CARD CODE: U 01

DRAWING NO. 3-V-5192-23485

REV 0

REV	DATE	ALTERED
		CHD & APPD

CAUTION: The information on this document is the property of BHARAT HEAVY ELECTRICALS LTD. It must not be used directly or indirectly in any way detrimental to the interest of the company.

Size A3

ALL DIMENSIONS ARE IN MILLIMETRES. FOR TOLERANCES OF UNTOLERANCED DIMENSIONS DURING MANUFACTURE REFER RELEVANT QCP / QP.

DRAWING NO. 3-V-NC06-23981

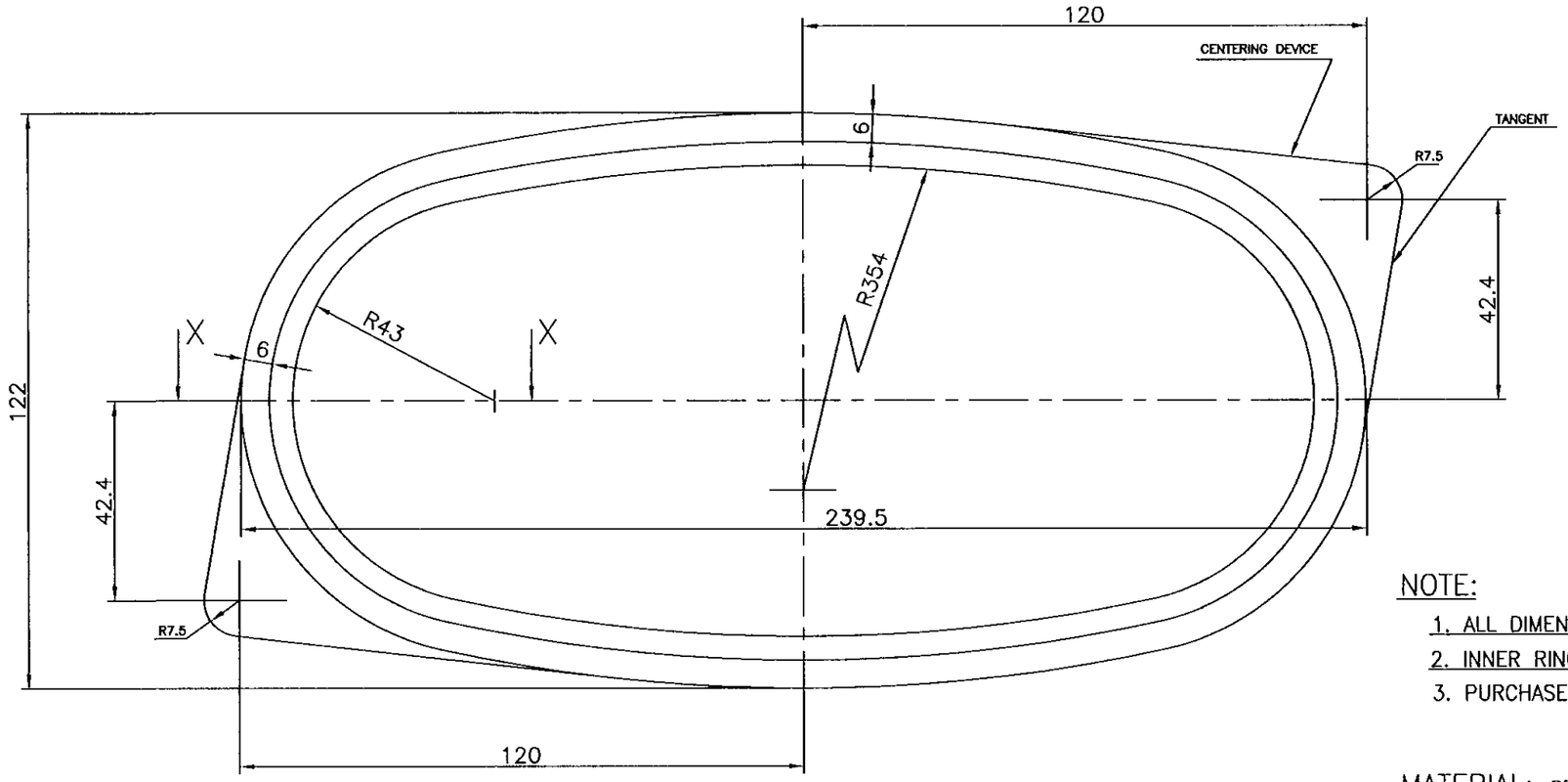

NOTE:

1. ALL DIMENSIONS ARE IN MM UNLESS OTHERWISE SPECIFIED.
2. INNER RING OF 316 STAINLESS STEEL SHALL BE PROVIDED.
3. PURCHASE SPECIFICATIONS SHALL BE AS PER APPLICABLE QUALITY PROCEDURE.

MATERIAL: SPIRAL WOUND AISI 316 FILLED WITH GRAFOIL.

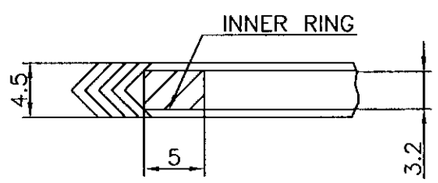

SECTION – XX

DIMENSIONAL TOLERANCES FOR GASKET

INSIDE DIMENSIONS ± 0.5
OUTSIDE DIMENSIONS ± 0.5
THICKNESS ± 0.13

WORKING CONDITIONS

PRESSURE – 30 KG/Sq.Cm. (524 PSI)
TEMPERATURE – 45°C TO 550°C
(–50°F TO 1025°F)

NO OFF	DESCRIPTION	MATL CODE	MATL SPECN	HEAT TREATMENT	SCRAP SORT	NET WT (kg)	GROSS WT (kg)	DRAWING No	ITEM No
–	–	–	–	–	–	–	–	–	–

REV	DATE	ALTERED
02	05.08.04	M.SRINIVASAN
		CHD & APPD K.S.RAMAN

DCP:800351

DIMENSIONS 42.4 & 120.0 WERE 40.8 & 116.8 RESPECTIVELY.

CAUTION: The information on this document is the property of BHARAT HEAVY ELECTRICALS LTD. It must not be used directly or indirectly in any way detrimental to the interest of the company.

TYPE OF PRODUCT
OR NAME OF
CUSTOMER/PROJECT

BHARAT HEAVY ELECTRICALS LTD.,
UNIT: HIGH PRESSURE BOILER PLANT.
TIRUCHIRAPALLI-620014.
365-121

	NAME	SIGN	DATE	NO.OF VAR.
DRN	M.SRINIVASAN		29.04.02	
CHD	P.BOOMINATHAN		29.04.02	
APPD	K.S.RAMAN		29.04.02	

DEPT	SCALE	WEIGHT (KG).	REFERENCE INFORMATIONS	NO. OF ITEMS
VL	N T S	0.20	COMPONENT CODE :964651430000	
CODE 320			CAD REF: C323981	

TITLE	CARD CODE	DRAWING NO.	REV
SPIRAL WOUND GASKET	U 01	3-V-NC06-23981	01

Size A3

ALL DIMENSIONS ARE IN MILLIMETRES. FOR TOLERANCES OF UNTOLERANCED DIMENSIONS DURING MANUFACTURE REFER RELEVANT QCP / QP.

DRAWING NO. 3-V-NC12-23999

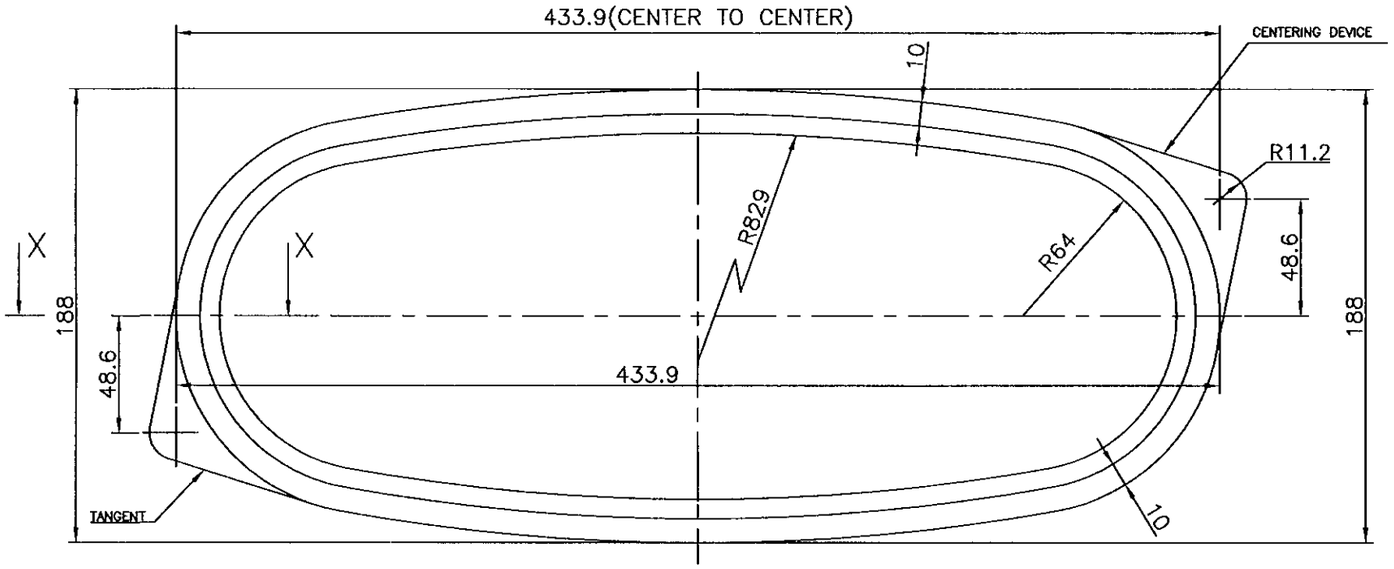

DIMENSIONAL TOLERANCES FOR GASKET

INSIDE DIMENSIONS ± 0.5
OUTSIDE DIMENSIONS ± 0.5
THICKNESS ± 0.13

WORKING CONDITIONS

PRESSURE – 30 KG/Sq.Cm. (524 PSI)
TEMPERATURE – 45°C TO 550°C
(–50°F TO 1025°F)

NOTE:

1. ALL DIMENSIONS ARE IN MM UNLESS OTHERWISE SPECIFIED.
2. INNER RING OF 316 STAINLESS STEEL SHALL BE PROVIDED.
3. PURCHASE SPECIFICATIONS SHALL BE AS PER APPLICABLE QUALITY PROCEDURE.

MATERIAL: SPIRAL WOUND AISI 316 FILLED WITH GRAFOIL.

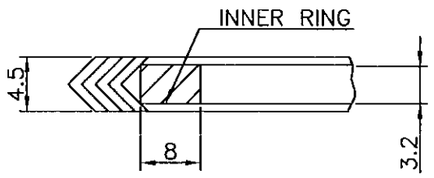

SECTION – XX

NO OFF	DESCRIPTION	MATL CODE	MATL SPECN	HEAT TREATMENT	SCRAP SORT	NET WT (kg)	GROSS WT (kg)	DRAWING No	ITEM No
–	–	–	–	–	–	–	–	–	–

TYPE OF PRODUCT
OR NAME OF
CUSTOMER/PROJECT

BHARAT HEAVY ELECTRICALS LTD.,
UNIT: HIGH PRESSURE BOILER PLANT.
TIRUCHIRAPALLI-620014.
365-121

	NAME	SIGN	DATE	NO.OF VAR.
DRN	M.SRINIVASAN		29.04.02	
CHD	P.BOOMINATHAN		29.04.02	
APPD	K.S.RAMAN		29.04.02	

REV	DATE	ALTERED
		CHD & APPD

CAUTION: The information on this document is the property of BHARAT HEAVY ELECTRICALS LTD. It must not be used directly or indirectly in any way detrimental to the interest of the company.

DEPT VL
CODE 320
SCALE N T S
WEIGHT (KG). 0.32
REFERENCE INFORMATIONS
COMPONENT CODE :964651450000
CAD REF: C323999
NO. OF ITEMS

TITLE SPIRAL WOUND GASKET
CARD CODE U 01
DRAWING NO. 3-V-NC12-23999
REV

Size A3

TDC FOR SUB-DELIVERY COMPONENTS (SWG)

1.	Item	: Spiral wound gaskets with grafoil filler.
2.	Application	: Body-Bonnet Sealing
3.	Material	:)) Refer Annexure
4.	Inspection	:)
5.	Packing	: Refer Annexure

PREPARED

CHECKED
(S. Chandra Shekar)

APPROVED

ANNEXURE

TECHNICAL DELIVERY CONDITION FOR METALLIC SPIRAL WOUND GASKETS - GRAFOIL FILLER

1.0 SCOPE:

This technical delivery condition specifies the constructional, functional and qualitative requirements of metallic spiral wound gaskets with grafoil filler for use in valves at different pressure and temperatures.

2.0 MANUFACTURE AND WORKMANSHIP :

2.1 These spiral wound gaskets shall be made of alternate plies of performed metal winding and filler tightly wound spirally.

2.2 The filler shall protrude above the metal strip by a maximum extent of 0.125mm on either face of the gasket.

2.3 At the start and conclusion of the spiral form a number of metal plies can be provided without any filler material; however, the number of such plies shall not exceed 5 at each end.

2.4 The metal winding around the entire inside circumference of the gasket shall be suitably spot welded in equal spacing not exceeding 25mm with a minimum of 3 welds.

2.5 The metal winding on the outside shall be welded with a minimum of three welds out of which one weld shall be at the terminal point.

2.6 Gaskets are to be compression tested in a compression testing machine with a suitable load to produce a unit pressure of 10000 to 15000 psi on the gasket. The compression shall not exceed the values specified in Table-1

... 3

TABLE-1

Gasket thickness before compression	Gasket thickness after compression
3.2 mm (1.125")	2.29 to 2.54 mm (0.09" to 0.1")
4.4 mm (1.175")	3.18 to 3.43 mm (0.125" to 0.135")

2.7 GASKET DENSITY :

The ratio of the number of metal windings to the number of filler windings, winding tension etc. which govern the gasket density shall be suitably selected by the supplier such that when the gaskets are compressed as described in Para 2.6, the thickness of the gasket lie within the limits specified in Table-1.

3.0 DIMENSION :

3.1 All dimensions and style shall be in accordance with the relevant drawing. Where tolerances are not specified in the drawing, the following deviations can be allowed:

Gasket diameter ID ± 0.4 mm OD + 0.5 mm − 0.0

Gasket thickness ± 0.13 mm

3.2 The thickness of the metal strip shall be between 0.18 mm and 0.23 mm.

3.3 The thickness of the grafoil used as filler shall not exceed 0.6 mm.

4.0 MATERIAL

4.1 Unless otherwise specified the material used for the metal winding shall be AISI 304 stainless steel.

4.2 The filler material shall be grafoil tapes.

... 4

4.3 If gaskets are required with centering rings the material shall conform to the drawing requirement.

5.0 PACKING :

Spiral wound gaskets shall be packed in Nos. of 10 in suitable card-board containers to avoid damage during transit. It should carry proper identification giving the size, type, drawing number and supplier's name.

6.0 RECEIPT INSPECTION & TESTING :

6.1 Visual Inspection :

The gasket shall be undamaged and the windings shall be intact.

6.2 At random few samples shall be selected and subjected to dimensional inspection. Dimensions shall conform to those given in the drawing.

6.3.1 The metal strip used shall be analysed for its chemical composition and it shall conform to the specification.

6.3.2 The filler material shall be analysed for material conformance.

6.4 Compression test :

6.4.1 The test shall consist of subjecting the gaskets to predetermined loads in a compression testing machine and measuring the thickness of the gaskets under the applied loads and after removal of loads.

6.4.2 The gasket shall be subjected to a uniform unit compressive load as described in Para 2.6

6.4.3 The thickness of the gasket shall be measured using dial indicators; with the applied load on the gasket, the thickness shall be within the limits specified in Table-1 under 2.6

6.4.4 After the load is removed the gasket shall recover atleast 0.25 mm over the compressed thickness obtained in the compression test.

6.4.6 The gasket shall be visually examined after the compression test.

No buckling on the inner edge of the gasket shall be allowed. The spot welds should not foil and the windings should be intact.

6.5 Hydrostatic test and steam test :

6.5.1 The gasket shall be assembled in the actual valve or an equivalent flange.

6.5.2 The bolts shall be tightened with a torque wrench and the torques applied or compressed height shall not exceed those indicated in the drawing.

6.5.3 Normal sequencing of bolt tightening for flanges shall be followed.

6.5.4 Hydrostatic test and steam test shall be carried out at the parameters mentioned in the drawing. There shall be no leakage through the gasketed joint.

7.0 Test certificates :

Supplier shall give the following Test Certificates for each item for each lot and should contain all details of the following tests.

a. Compression Test Certificate

b. Material Test Certificate

c. Visual inspection and dimensional inspection