FIRST ANGLE PROJECTION

(ALL DIMENSIONS ARE IN mm)

DRG. NO. 1-163-11-11360 SH OF

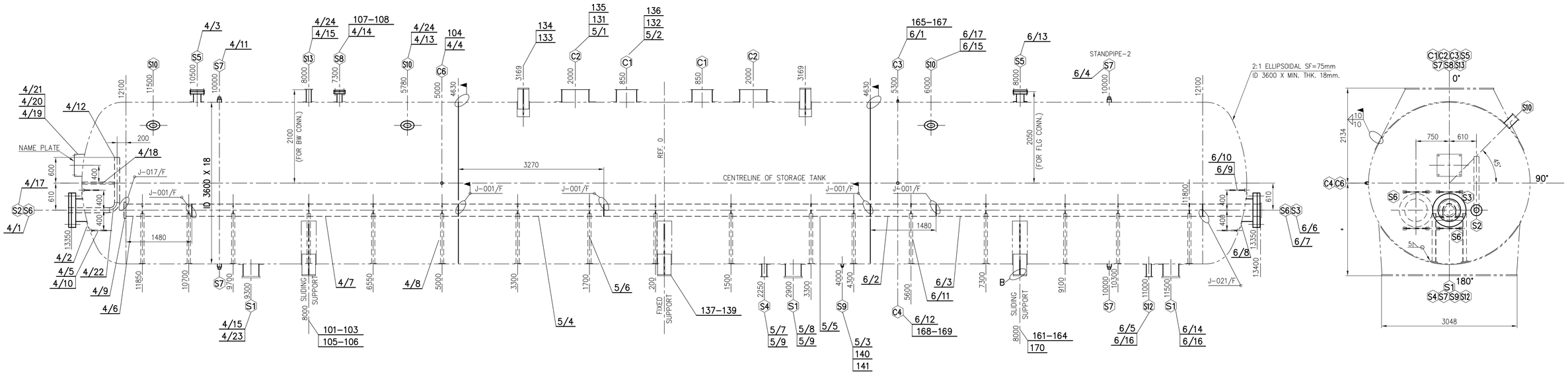


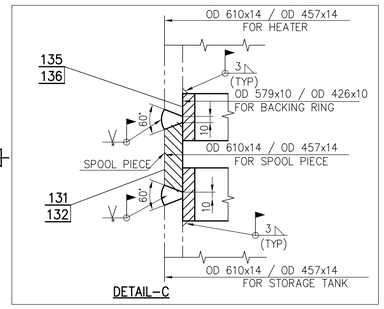


DETAIL-C

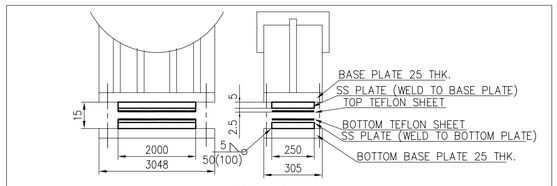


DETAIL-B

TEFLON SHEET ASSLY BELOW SLIDING SUPPORT

PREFIX 1/, 2/ & 3/ FOR POS. NOs. FOR SEC-I, II & III RESPECTIVELY, EXCEPT POS. NOs. 101-108, 131-141, 161-170.

# 2082 FOR FIXED SUPPORT & 2067 FOR SLIDING SUPPORT, 15mm DIFFERENCE IS COMPENSATED BY TEFLON SHEET ASSLY. (REFER DET-B)

IMPORTANT:-
SUBCONTRACTOR SHALL TAKE CONCURRENCE FROM ENGINEERING DEPT.
BEFORE MAKING ANY OPENINGS FOR NOZZLES ON THE SHELL & DISHED ENDS

NOTES:-

1. ALL NOZZLE BOLT HOLES SHALL STRADDLE NORMAL CENTRE LINES OF VESSEL.
2. ALL FABRICATED NOZZLES TO BE FULLY RADIOGRAPHED.
3. BUTT WELD CONNECTIONS TO HAVE HYDROTEST BLANK - OFF PLATES LEFT
4. IN PLACE (TO BE REMOVED AFTER HYDRAULIC TEST AT SITE)
5. WPS FOR FILLET WELDS ON SHELL ARE AS PER J-002/F & FILLET DIMENSION SHOWN SHOWN IS THROAT DIMENSION
6. ALL LONGITUDINAL AND CIRCUMFERENTIAL WELDS ARE TO BE BACK-GOUGED TO SOUND METAL.
7. M.P TEST REQUIRED ONLY AT NOZZLE TO HEAD WELDS AND NOZZLE TO SHELL WELDS
8. TANK WILL BE DESPATCHED IN THREE SECTIONS.
9. INSIDE EDGES OF ALL PROJECTED NOZZLES SHALL BE ROUNDED OFF.
10. NOZZLES WHICH OVERLAP C-SEAMS SHALL MEET THE REQUIREMENTS OF UW-14
11. FOUNDATION BOLTS: M42x300 STUD WITH TWO NUTS 16 No'S PER SET ALONG WITH WASHER SHALL BE SUPPLIED.
12. HYDROSTATIC TEST AS PER HY0852061
13. SPOOL PIECE CONSTRUCTED OF SA 516/70 WILL BE SUPPLIED TO AID IN PROPER FIT UP OF THE DOWN COMMERS AND EQUALIZERS. TWO BACKING RINGS WILL BE SUPPLIED WITH EACH SPOOL PIECE (REFER DET-C).
14. STORAGE TANK TO HEADER CONNECTION SHALL BE AS PER DET-C AT SITE. (DOWN COMMERS & EQUALISERS)
15. VENTILATOR IS A FLANGED CONN. BLANKED WITH A BLIND FLANGE. THIS CAN BE USED FOR VENTILATION INSIDE THE STORAGE TANK DURING ANY MAINTAINANCE OPERATION. THIS IS POSSIBLE BY OPENING THE BLIND FLANGE OF THE VENTILATOR NOZZLE.
16. SPOOL PIECE ARE EDGE PREPARED ONLY ON ONE SIDE AT WORKS. CUTTING SPOOL PIECE TO EXACT LENGTH AS PER SITE REQUIREMENT AND EDGE PREPARATION ON THE OTHER SIDE IS IN SITE SCOPE OF WORK.
17. BOLTING TO SECURE HEATER TO STORAGE TANK IS OF M27x120 IN SIZE AND 8 No'S IN QTY.
18. SYMBOL ⚑ INDICATES SITE WELDING
19. SADDLE SUPPORTS FOR SUPPORTING DEAERATOR HEATER SHALL BE DESPATCHED IN TACK WELDED CONDITION FROM WORKS. FINAL WELDIND SHALL BE AT SITE.
20. FOR NAME PLATE (POS. NO. 4/20) DRG. NO. REFER ST.TANK ASSLY. DRG.

* SPHERICAL DISH ARE ALREADY PRESSED TO REQ. RADIUS AT SUPPLIERS WORK & NO FUTHUR PRESSING IS REQUIRED.

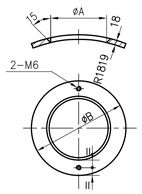


* NOTES FOR LIST OF NOZZLE CONN.

1) FOR DETAILS J-001/F, J-002/F, J-007/F, J-015/F, J-017/F, J-021/F REFER DRG. NO. 2-163-10-00014.
2) FOR DETAILS D1 TO D32 REFER DRG. NO. 1-163-10-11267
3) FOR DETAIL-B & C REFER THIS DRG.

** SW PIPE TO COUPLING AFTER REMOVING PLUG
*** SCREW PLUG WITH WASHER

LIST OF NOZZLE CONNECTIONS

| REF. | DESCRIPTION | SIZE | OD X THK | QTY | TYPE | WELDING DETAILS: SHELL TO * NOZZLE | NOZZLE END CONNECTION * AT WORKS | * AT SITE | REMARKS | ØA | ØB | REF. | VAR. |
|---|---|---|---|---|---|---|---|---|---|---|---|---|---|
| S1 | FEED WATER OUTLET | 14" | 355.6 x 12.7 | 3 | BW | DET-D32 | DET-D32 | DET-D5 | WITH VORTEX BREAKER | 372 | 550 | S1 | 01 |
| S2 | OVER FLOW CONN. | 4" | 114.3 X 11.13 | 1 | BW | DET-D1 | DET-D1 | DET-D5 | | 130 | 250 | S2 | 02 |
| S3 | INITIAL HEATING STEAM CONN. | 10" | 273.1 X 12.7 | 1 | BW | DET-D1 | DET-D1 | DET-D5 | | 289 | 500 | S3 | 03 |
| S4 | DRAIN CONN. TO FLASH TANK | 4" | 114.3 X 11.13 | 1 | BW | DET-D2 | DET-D2 | DET-D5 | | 130 | 250 | S4 | 04 |
| S5 | VENTILATOR | 6" | 168.3 X 10.97 | 2 | FLG 300# RF | DET-D4 | DET-D4 | - | REFER NOTE-15 | 184 | 300 | S5 | 05 |
| S6 | MAN HOLES | 20" | 508 X 12.7 | 2 | FLG 300# RF | J-007/F | J-015/F | - | | 524 | 750 | S6 | 06 |
| S7 | STAND PIPE CONN. | 2" | COUPLING 6000# | 4 | SW | DET-D6 | DET-D6 | DET-D31 | ** | - | - | S7 | 07 |
| S8 | INITIAL FILLING CONN. | 4" | 114.3 X 11.13 | 1 | FLG 300# RF | DET-D3 | DET-D3 | DET-D3 | | 130 | 250 | S8 | 08 |
| S9 | SAMPLING CONN. | 1" | COUPLING 6000# | 1 | SW | DET-D6 | DET-D6 | DET-D31 | ** | - | - | S9 | 09 |
| S10 | BFP RECIRCULATION CONN. | 6" | 168.3 X 21.95 | 3 | BW | DET-D10 | DET-D10 | DET-D5 | WITH DISPERSER | 184 | 300 | S10 | 10 |
| S12 | SPARE CONN. | 4" | 114.3 X 11.13 | 1 | BW | DET-D2 | DET-D2 | - | BLANKED | 130 | 250 | S12 | 08 |
| S13 | SPARE CONN. | 4" | 114.3 X 11.13 | 1 | BW | DET-D1 | DET-D1 | - | BLANKED | 130 | 250 | S13 | 13 |
| C1 | EQUALISER CONN. | 18" | 457 X 14 | 2 | BW | DET-D1 | DET-D1 | DET-D5/ DET-C | | 473 | 650 | C1 | 21 |
| C2 | DOWNCOMMER CONN. | 24" | 610 X 14 | 2 | BW | DET-D1 | DET-D1 | DET-D5/ DET-C | | 626 | 850 | C2 | 22 |
| C3 | PRESSURE GAUGE CONN. | 1/2" | COUPLING 6000# | 1 | SW | DET-D6 | DET-D6 | DET-D31 | ** | - | - | C3 | 23 |
| C4 | THERMOWELL CONN. | M33X2 | COUPLING | 1 | SCREWED | J-008/F | *** | SCREW THERMOWELL | SPECIAL COUPLING | - | - | C4 | 24 |
| C6 | TEMPERATURE ELEMENT CONN. | M33X2 | COUPLING | 1 | SW | J-008/F | *** | SCREW THERMOWELL | SPECIAL COUPLING | - | - | C6 | 24 |

TYPE OF PRODUCT
OR
OF CUSTOMER/PROJECT

BHARAT HEAVY ELECTRICALS LTD.
HYDERABAD

| | NAME | SIGN. | DATE | NO.OF VAR. |
|---|---|---|---|---|
| DRN. | A.L RAJAM | | 01.04.10 | |
| CHD. | UMESH MENON | | 01.04.10 | N.A |
| APPD. | B SRINIVAS | | 01.04.10 | |

| DEPT. | GRADE OF TOL.DIM. C/M/F | SCALE | WEIGHT (KG) | REF. TO ASSY DRG. | ITEM NO. | NO.OF ITEMS |
|---|---|---|---|---|---|---|
| HEE | | NTS | NA | NA | N.A | N.A |
| CODE 405 | | | | | | |

TITLE: NOZZLE ASSLY (STORAGE TANK)

CARD CODE

DRAWING NO. 1-163-11-11360 REV. 00

SHEET No. 1 NO OF SHEETS 1

| REV. | DATE | ALTERED | CHECKED | APPD | ZONE |
|---|---|---|---|---|---|
| A | | | | | |

THE INFORMATION ON THIS DOCUMENT IS THE PROPERTY OF BHARAT HEAVY ELECTRICALS LIMITED. IT MUST NOT BE USED DIRECTLY OR INDIRECTLY IN ANY WAY DETRIMENTAL TO THE INTEREST OF THE COMPANY

GENERAL DIMENSIONAL LIMITS,FITS & TOLERANCES AS PER HY0230261

COMPUTER FILE NAME | REF. DRG. NO. | SIGN. AND DATE | INVENTORY NO

BHEL-HYD EDAS ESP RESTRICTED USE

This Drawing is printed from Engineering Digital Archive System (EDAS). Therefore signatures are not essentially required.

01-04-2010 16:03:28

FIRST ANGLE PROJECTION

(ALL DIMENSIONS ARE IN mm)

DRG. NO. 3-163-16-11681

NOTES:

1. POS. NO. 1/1 FOR SHELL ASSLY. REFER DRG NO. 3-163-16-11642
2. POS. NOS. 1/2, 51-64 FOR NOZZLE ASSLY. REFER DRG. NO. 1-163-16-11452
3. POS. NO. 1/3 FOR WATER BOX ASSLY. REFER DRG. NO. 1-163-16-11406
4. POS. NO. 1/4 FOR TRAY ASSLY. REFER DRG. NO. 1-163-16-11274

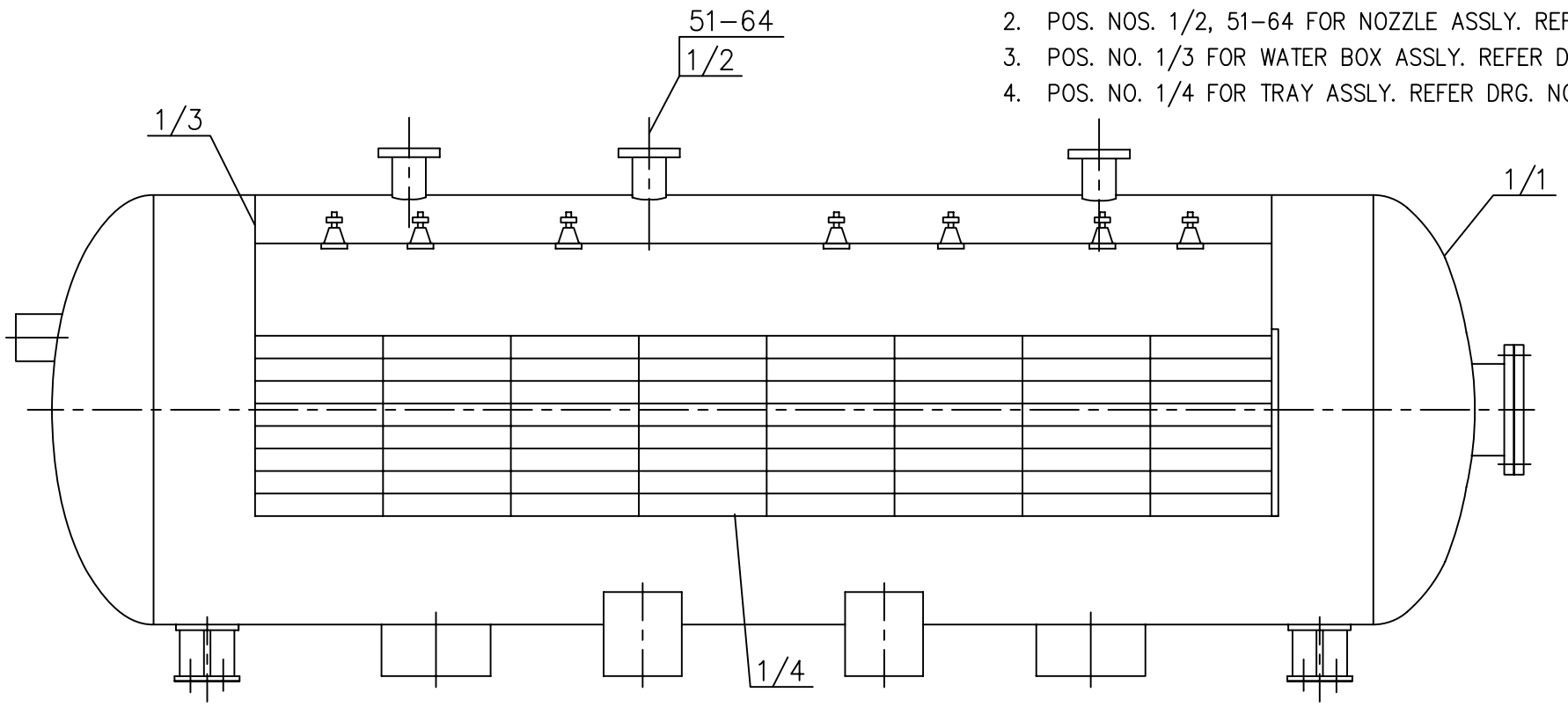


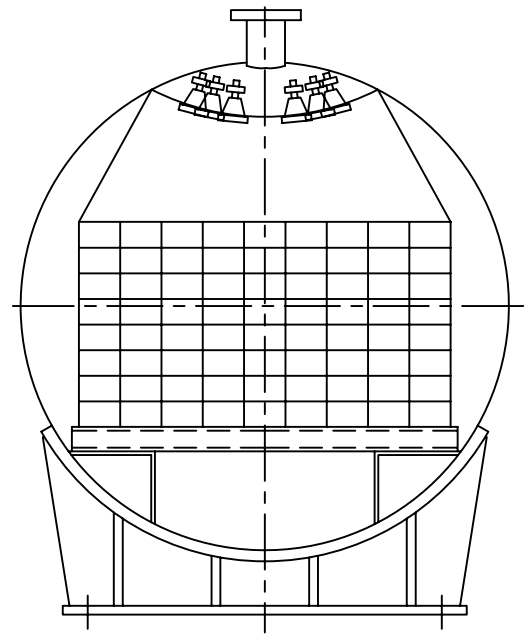

DESIGN DATA

| DESCRIPTION | | | |
|---|---|---|---|
| DESIGN PRESSURE | | Kg/sq.cm (g) | 8.5 & FULL VACUUM |
| TEST PRESSURE | | Kg/sq.cm (g) | 11.05 |
| DESIGN TEMP. MAX/MIN | | °C | 350/0 |
| TEST TEMP. MAX/MIN | | °C | AMBIENT/17 |
| CORROSION ALLOW. IN mm | SHELL/ HEADS | | 3.2 |
| | RF PADS/ NOZZLES/ FLANGES mm | | 1.6 |
| RADIO GRAPHY | | | 100% |
| JOINT EFFICIENCY | | | 1.0 |
| INSPECTION | | | BHEL & LLOYDS & * |
| DESPATCH WT. (A) | | KG | 15927 |
| LOOSE ITEMS WT. IN FABRICATOR SCOPE (B) | | KG | 229 |
| LOOSE ITEMS WT. IN BHEL SCOPE (C) | | KG | 483 |
| TOTAL WT. (A+B+C) | | KG | 16639 |
| PWHT | | | NOT REQUIRED |

* CUSTOMER APPOINTED TPI (OPTIONAL), FOR APPLICABILITY REFER QP.

| | |
|---|---|
| DESIGN, FABRICATION & TESTING CODE | ASME SEC VIII DIV.1, YEAR AND ADDENDA LATEST |
| WORK ORDER No. | REFER ANNEXURE TO P.O |
| VESSEL No. | REFER ANNEXURE TO P.O |
| WELD DET. & WPS DRG. No. | 2 163 10 00014 |
| NOZZLE DETAIL DRG. No. | 1 163 10 11267 |
| HEADER MATERIAL/ DRG. LIST. | T31631611681-00 |

TYPE OF PRODUCT OR NAME OF CUSTOMER/PROJECT: 270MW DEAERATOR

बीएचईएल BHEL BHARAT HEAVY ELECTRICALS LTD. HYDERABAD

| | NAME | SIGN. | DATE | NO.OF VAR. |
|---|---|---|---|---|
| DRN. | AL RAJAM | | 14.02.11 | NA |
| CHD. | UMESH MENON | | 14.02.11 | |
| APPD. | TSN BHARGAV | | 14.02.11 | |

NOTE:-

1) PAINTING INSIDE: NIL
   OUTSIDE: TWO COATS OF HEAT RESISTANT ALUMINIUM PAINT AS PER AA56134.
2) QUALITY PLAN No. IS INDICATED IN ANNEXURE TO P.O.

| REV. | DATE | ALTERED | CHECKED | APPD |
|---|---|---|---|---|
| | | | | |
| ZONE | | | | |

| DEPT. | GRADE OF TOL.DIM. C/M/F | SCALE | WEIGHT (KG) | REF. TO ASSY DRG. | ITEM NO. | NO.OF ITEMS |
|---|---|---|---|---|---|---|
| HEE CODE 405 | | NTS | NA | NA | NA | NA |

TITLE: HEATER ASSLY. (DEAERATOR)

CARD CODE

DRAWING NO. 3-163-16-11681 REV. 00

SHEET No. NO OF SHEETS

THE INFORMATION ON THIS DOCUMENT IS THE PROPERTY OF BHARAT HEAVY ELECTRICALS LIMITED. IT MUST NOT BE USED DIRECTLY OR INDIRECTLY IN ANY WAY DETRIMENTAL TO THE INTEREST OF THE COMPANY

INVENTORY NO | SIGN. AND DATE | REF. DRG. NO.

FIRST ANGLE PROJECTION

(ALL DIMENSIONS ARE IN mm)

DRG. NO. 3-163-16-11642

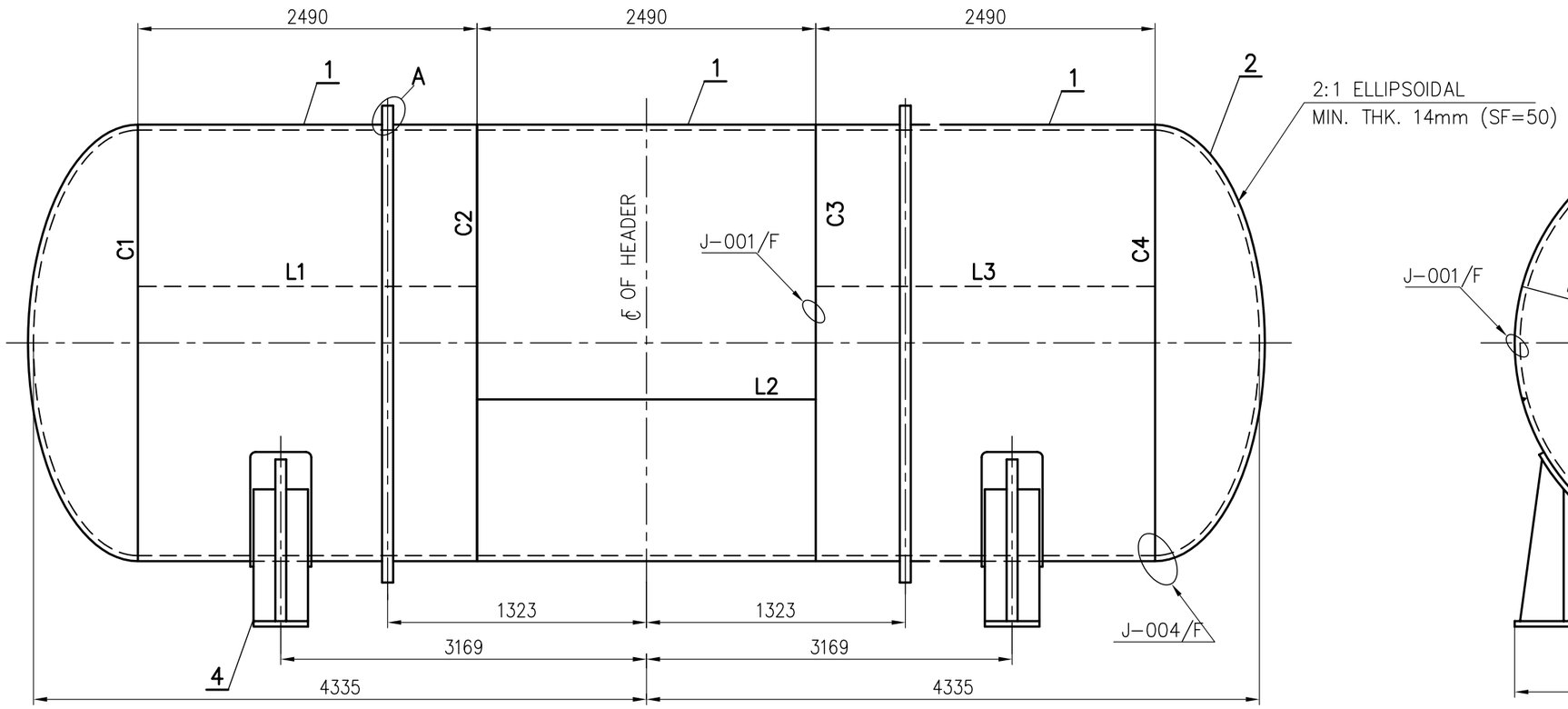


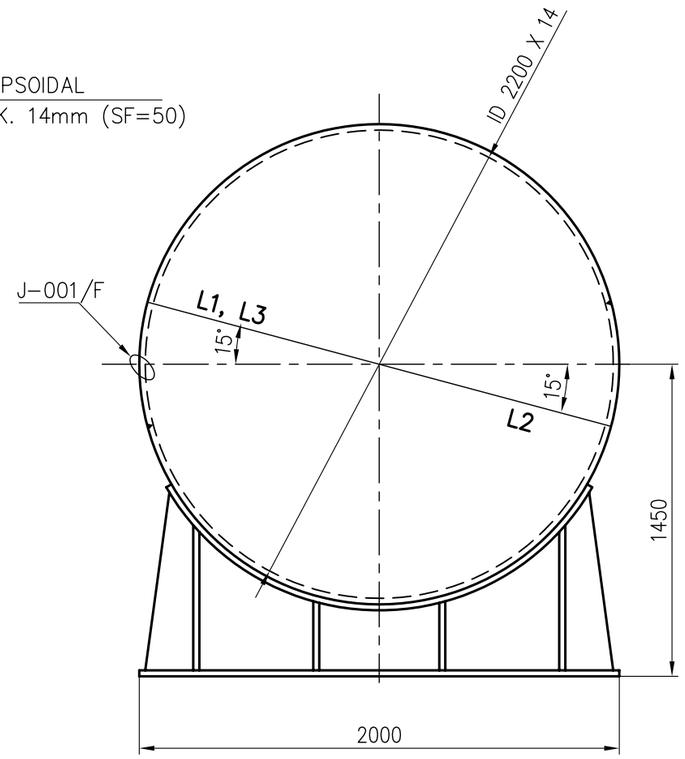


**NOTE:-**

1. DETAIL OF WELDS & WPS. NOS. REF. DRG. NO. 2-163-10-00014
2. RADIO GRAPHY -------- 100 %.
3. ALL LOGITUDINAL & CIRCUMFERENTIAL WELDS ARE TO BE BACK GOUGED TO SOUND METAL.
4. DURING THE FIT UP OF DISHED END TO SHELL A REFERENCE LINE SHALL BE MARKED ON THE SHELL AT A DISTANCE OF 100MM FROM THE END OF THE SHELL , WHICH SHALL BE TRANSFERED BACK AFTER WELDING, TO IDENTIFY WELD LINE.
5. DEVELOPED LENGTH OF POS. NO. 1= 6955.

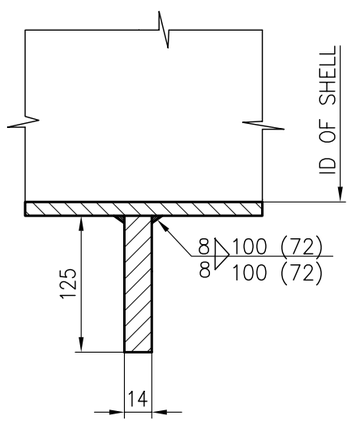


**DETAIL-A**

(POS. NO. 3)

THE INFORMATION ON THIS DOCUMENT IS THE PROPERTY OF BHARAT HEAVY ELECTRICALS LIMITED.
IT MUST NOT BE USED DIRECTLY OR INDIRECTLY IN ANY WAY DETRIMENTAL TO THE INTEREST OF THE COMPANY

INVENTORY NO | SIGN. AND DATE | REF. DRG. NO.

TYPE OF PRODUCT
OR
NAME OF CUSTOMER/PROJECT

BHEL-HYD EDAS ESA

BHARAT HEAVY ELECTRICALS LTD.
HYDERABAD

RESTRICTED USE

| | NAME | SIGN. | DATE | NO.OF VAR. |
|---|---|---|---|---|
| DRN. | A.L RAJAM | | 29.03.10 | NA |
| CHD. | UMESH MENON | | 29.03.10 | |
| APPD. | B SRINIVAS | | 29.03.10 | |

| REV. | DATE | ALTERED | CHECKED | APPD |
|---|---|---|---|---|
| | | | | |
| ZONE | | | | |

| DEPT. | GRADE OF TOL.DIM. C/M/F | SCALE | WEIGHT (KG) | REF. TO ASSY DRG. | ITEM NO. | NO.OF ITEMS |
|---|---|---|---|---|---|---|
| HEE | | NTS | NA | NA | NA | NA |
| CODE 405 | | | | | | |

TITLE
SHELL ASSLY.
(FOR DEAERATOR HEATER)

CARD CODE

DRAWING NO. 3-163-16-11642

REV. 00

SHEET No. 1 NO OF SHEETS 1

30-03-2010
09:48:58

This Drawing is printed from Engineering Digital Archive System (EDAS).
Therefore signatures are not essentially required.

FIRST ANGLE PROJECTION

(ALL DIMENSIONS ARE IN mm)

DRG. NO. 3-163-11-11959

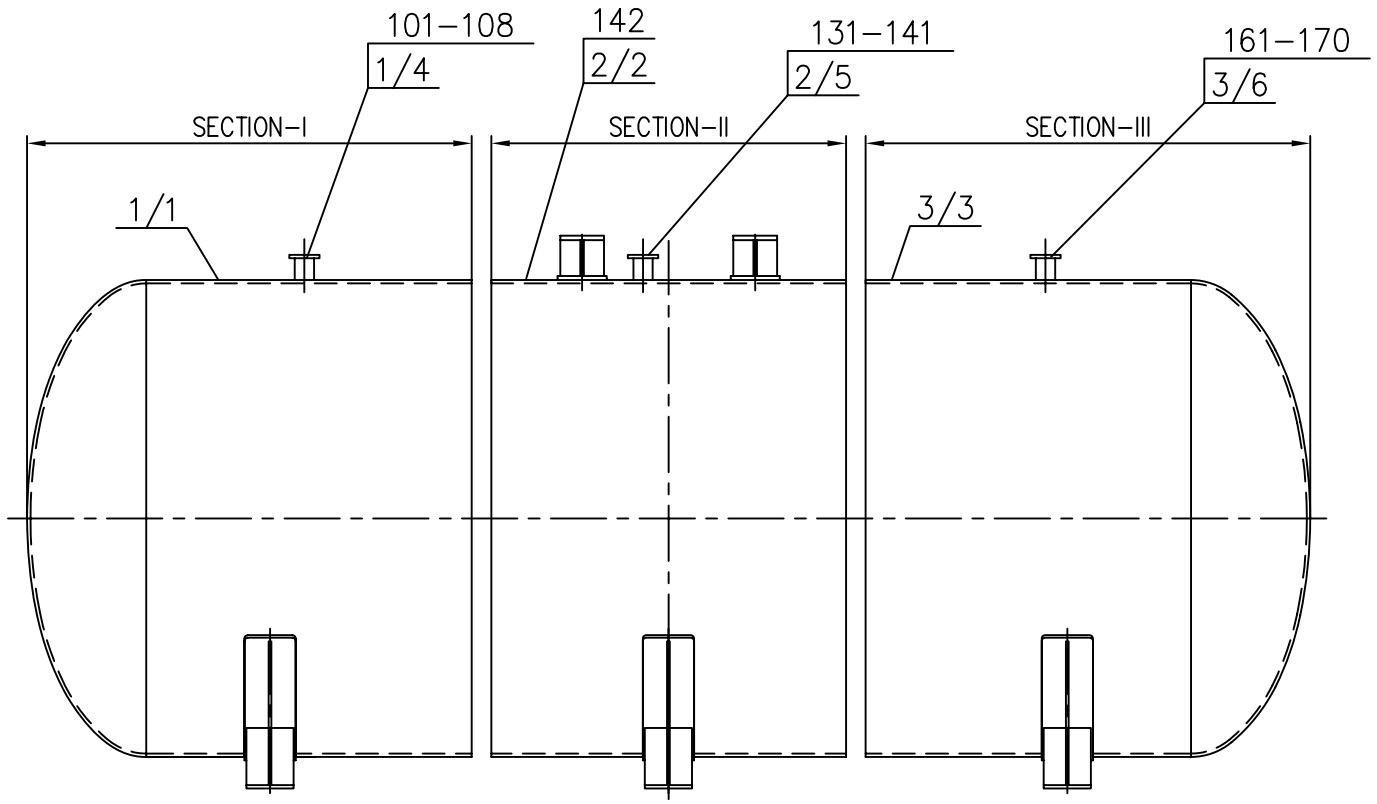


NOTES:

1. POS. NO. 1/1 FOR SHELL ASSLY. SEC-I, REFER DRG NO. 3-163-11-11917
2. POS. NOs. 2/2, 142 FOR SHELL ASSLY. SEC-II, REFER DRG NO. 3-163-11-11917
3. POS. NO. 3/3 FOR SHELL ASSLY. SEC-III, REFER DRG NO. 3-163-11-11917
4. POS. NOs. 1/4, 101-108 FOR NOZZLE ASSLY. SEC-I, REFER DRG NO. 1-163-11-11360
5. POS. NOs. 2/5, 131-141 FOR NOZZLE ASSLY. SEC-II, REFER DRG NO. 1-163-11-11360
6. POS. NOs. 3/6, 161-170 FOR NOZZLE ASSLY. SEC-III, REFER DRG NO. 1-163-11-11360

TABLE-I

| STORAGE TANK SECTION. NO. | DES. WT. IN (Kg) (A) | # IN (Kg) (B) | ## IN (Kg) (C) | TOTAL WT. IN (Kg) (A+B+C) | HEADER MATL. No./ DRG. LIST |
|---|---|---|---|---|---|
| SECTION-I | 18021 | 253 | 1 | 18275 | T31631111959-00A |
| SECTION-II | 19347 | 991 | 0 | 20338 | T31631111959-00B |
| SECTION-III | 17952 | 247 | 5 | 18204 | T31631111959-00C |

# LOOSE ITEMS WT. IN FABRICATOR SCOPE
## LOOSE ITEMS WT. IN BHEL SCOPE

DESIGN DATA

| DESCRIPTION | | | |
|---|---|---|---|
| DESIGN PRESSURE | | Kg/sq.cm (g) | 8.5 & FULL VACUUM |
| TEST PRESSURE | | Kg/sq.cm (g) | 11.05 |
| DESIGN TEMP. MAX/MIN | | °C | 250/0 |
| TEST TEMP. MAX/MIN | | °C | AMBIENT/17 |
| CORROSION ALLOW. IN mm | SHELL/ HEADS | | 3.2 |
| | RF PADS/ NOZZLES/ FLANGES mm | | 1.6 |
| RADIO GRAPHY | | | 100% |
| JOINT EFFICIENCY | | | 1.0 |
| INSPECTION | | | BHEL & LLOYDS & * |
| TOTAL WEIGHT OF ST.TANK | | KG | REFER TABLE-1 |
| DESPATCH WEIGHT | | KG | REFER TABLE-1 |
| PWHT | | | NOT REQUIRED |

* CUSTOMER APPOINTED TPI (OPTIONAL), FOR APPLICABILITY REFER QP.

| | |
|---|---|
| DESIGN, FABRICATION & TESTING CODE | ASME SEC VIII DIV.1, YEAR AND ADDENDA LATEST |
| WORK ORDER No. | REFER ANNEXURE TO P.O |
| VESSEL No. | REFER ANNEXURE TO P.O |
| WELD DET. & WPS DRG. No. | 2 163 10 00014 |
| NOZZLE DETAIL DRG. No. | 1 163 10 11267 |
| HEADER MATERIAL/ DRG. LIST. | REFER TABLE-1 |

TYPE OF PRODUCT OR NAME OF CUSTOMER/PROJECT: 270MW DEAERATOR

NOTE:-

1) PAINTING INSIDE: STEAM WASHABLE PAINT AS PER AA55151.
   OUTSIDE: TWO COATS OF HEAT RESISTANT ALUMINIUM PAINT AS PER AA56134.
2) FOR NAME PLATE DRG. NO. DETAILS, REFER ANNEXURE TO P.O.
3) QUALITY PLAN No. IS INDICATED IN ANNEXURE TO P.O.

| REV. | DATE | ALTERED | CHECKED | APPD |
|---|---|---|---|---|
| | | | | |
| ZONE | | | | |

BHARAT HEAVY ELECTRICALS LTD.
HYDERABAD

| | NAME | SIGN. | DATE | NO.OF VAR. |
|---|---|---|---|---|
| DRN. | AL RAJAM | | 14.02.11 | NA |
| CHD. | UMESH MENON | | 14.02.11 | |
| APPD. | TSN BHARGAV | | 14.02.11 | |

| DEPT. | GRADE OF TOL.DIM. C/M/F | SCALE | WEIGHT (KG) | REF. TO ASSY DRG. | ITEM NO. | NO.OF ITEMS |
|---|---|---|---|---|---|---|
| HEE / CODE 405 | | NTS | NA | NA | NA | NA |

TITLE: ST.TANK ASSLY. (DEAERATOR)

CARD CODE

DRAWING NO. 3-163-11-11959 REV. 00

SHEET No. NO OF SHEETS

THE INFORMATION ON THIS DOCUMENT IS THE PROPERTY OF BHARAT HEAVY ELECTRICALS LIMITED.
IT MUST NOT BE USED DIRECTLY OR INDIRECTLY IN ANY WAY DETRIMENTAL TO THE INTEREST OF THE COMPANY

INVENTORY NO | SIGN. AND DATE | REF. DRG. NO.

FIRST ANGLE PROJECTION

(ALL DIMENSIONS ARE IN mm)

DRG. NO. 3-163-11-11917

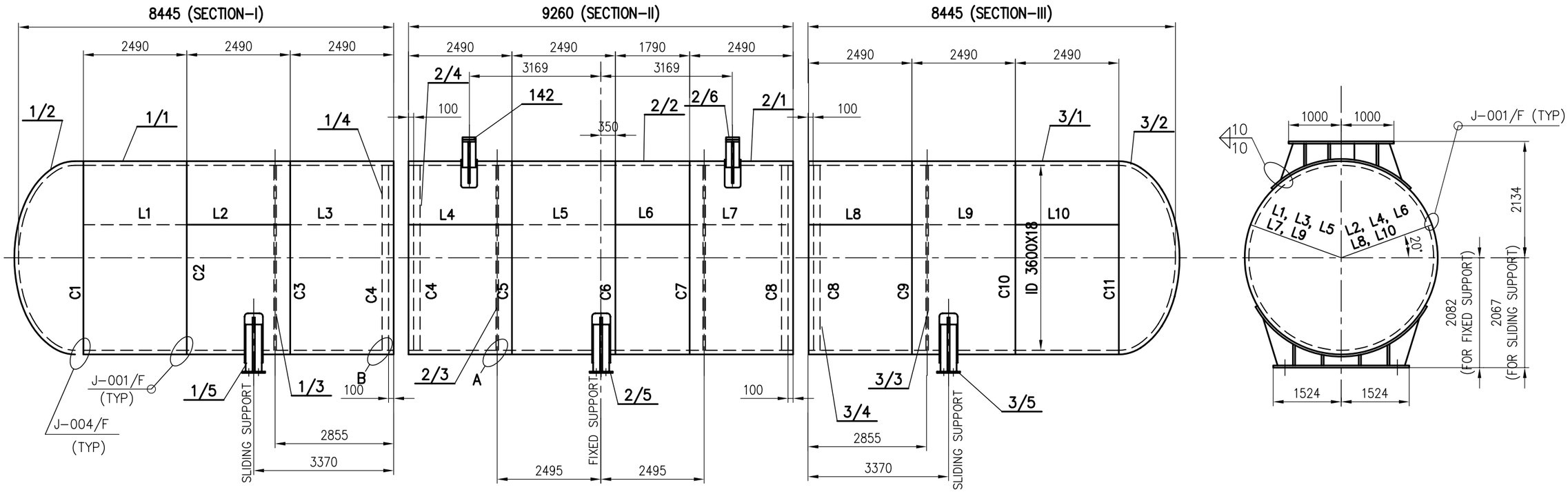


## NOTES: –

1. ALL LONGITUDINAL AND CIRCUMFERENTIAL WELDS ARE TO BACK GOUGED TO SOUND METAL
2. ALL BUTT WELD JOINTS TO BE 100 % RADIOGRAPHED.
3. FOR WELD DETAILS & WPS. NOS. REFER DRG. NO. 2-163-10-00014
4. POS. NOs. 1/4, 2/4 & 3/4 ARE REQUIRED TO PREVENT DISTORTION OF SHELL SEGMENTS DURING TRANSPORTATION, TO BE REMOVED AFTER WELDING THE SECTIONS AT SITE.
5. DURING THE FIT UP OF DISHED END TO SHELL A REFERENCE LINE SHALL BE MARKED ON THE SHELL AT A DISTANCE OF 100MM FROM THE END OF THE SHELL , WHICH SHALL BE TRANSFERED BACK AFTER WELDING, TO IDENTIFY WELD LINE.

PREFIX 1/, 2/ & 3/ FOR POS. NOs. FOR SEC-I, II & III RESPECTIVELY, EXCEPT POS. NO. 142.

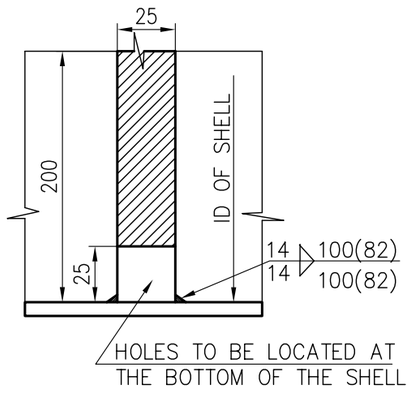


DETAIL-A (POS. NO. 1/3, 2/3, 3/3)

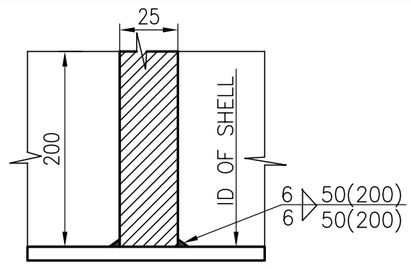


(POS. NO. 1/4, 2/4, 3/4)

DETAIL-B

TYPE OF PRODUCT
OR
NAME OF CUSTOMER/PROJECT

BHARAT HEAVY ELECTRICALS LTD.
HYDERABAD

| | NAME | SIGN | DATE | NO.OF VAR. |
|---|---|---|---|---|
| DRN. | A.L RAJAM | | 01.04.10 | NA |
| CHD. | UMESH MENON | | 01.04.10 | |
| APPD. | B SRINIVAS | | 01.04.10 | |

RESTRICTED USE

BHEL-HYD EDAS INFORMATICS CENTRE

| REV. | DATE | ALTERED | CHECKED | APPD |
|---|---|---|---|---|
| | | | | |
| ZONE | | | | |

| DEPT. | GRADE OF TOL.DIM. C/M/F | SCALE | WEIGHT (KG) | REF. TO ASSY DRG. | ITEM NO. | NO.OF ITEMS |
|---|---|---|---|---|---|---|
| HEE | | NTS | | NA | NA | NA |
| CODE 405 | | | | | | |

TITLE
SHELL ASSLY
(FOR STORAGE TANK SHELL)

CARD CODE

DRAWING NO. 3-163-11-11917

REV. 00

SHEET No. 1 NO OF SHEETS 1

THE INFORMATION ON THIS DOCUMENT IS THE PROPERTY OF BHARAT HEAVY ELECTRICALS LIMITED.
IT MUST NOT BE USED DIRECTLY OR INDIRECTLY IN ANY WAY DETRIMENTAL TO THE INTEREST OF THE COMPANY

INVENTORY NO | SIGN. AND DATE | REF. DRG. NO.

02-02-2011
14:11:17

This Drawing is printed from Engineering Digital Archive System (EDAS).
Therefore signatures are not essentially required.

FIRST ANGLE PROJECTION

(ALL DIMENSIONS ARE IN mm)

DRG. NO. 2-163-35-11514

SH. OF

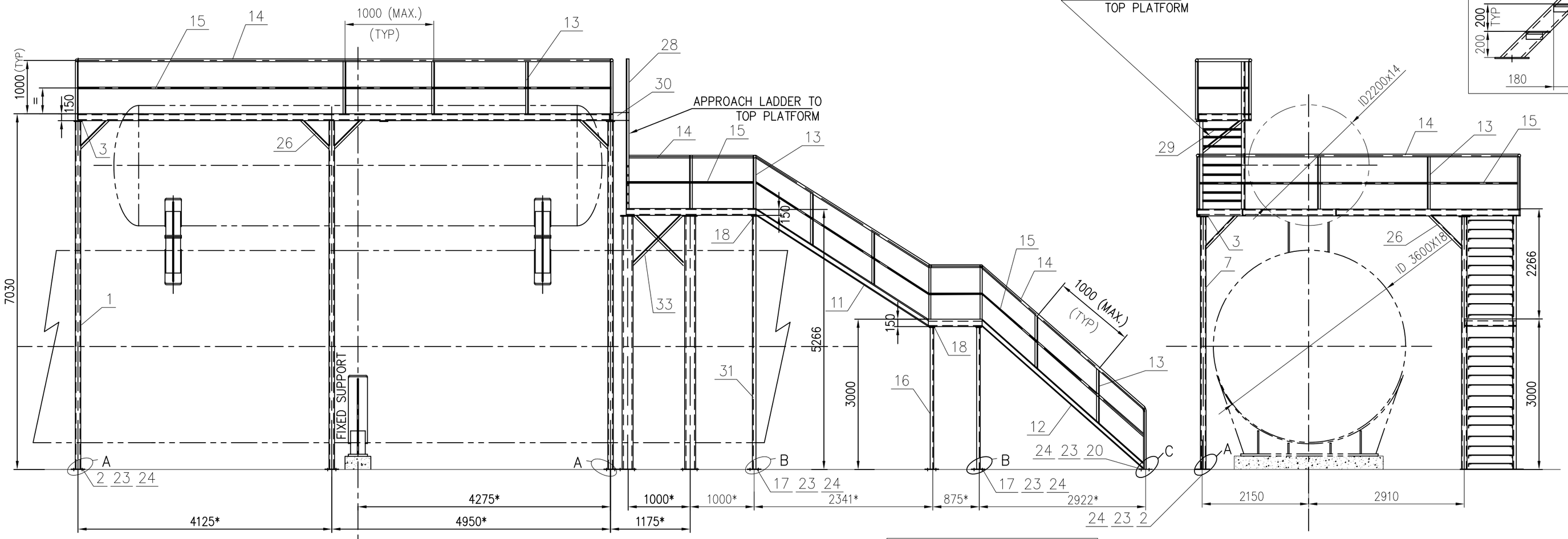


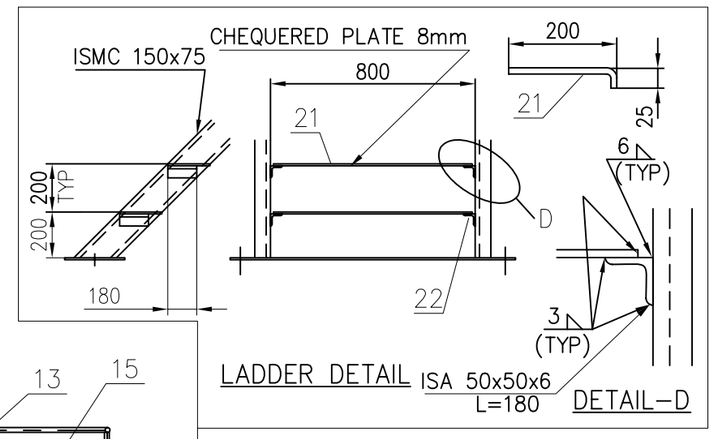


LADDER DETAIL

DETAIL-D

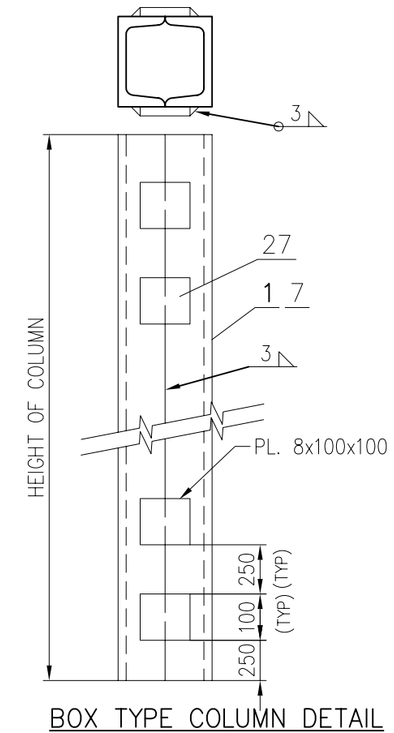


BOX TYPE COLUMN DETAIL

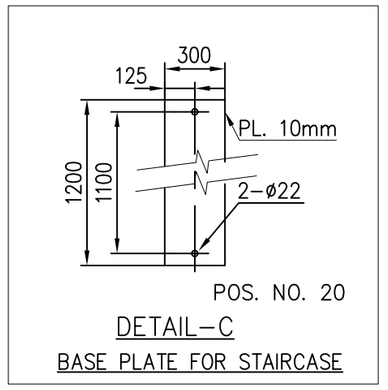


POS. NO. 20

DETAIL-C

BASE PLATE FOR STAIRCASE

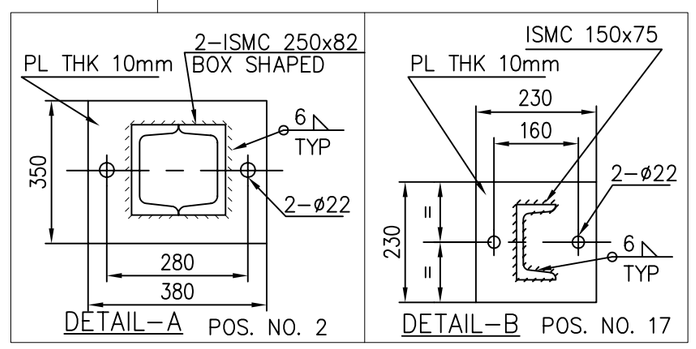


DETAIL-A POS. NO. 2

DETAIL-B POS. NO. 17

NOTE:-

1) CUTTING OF RAW MATERIAL AS INDICATED IN THE BOM AND DRILLING OF HOLES IN BASE PLATES IS IN VENDORS SCOPE.

5) HEADER MATERIAL: T21633511514-00.

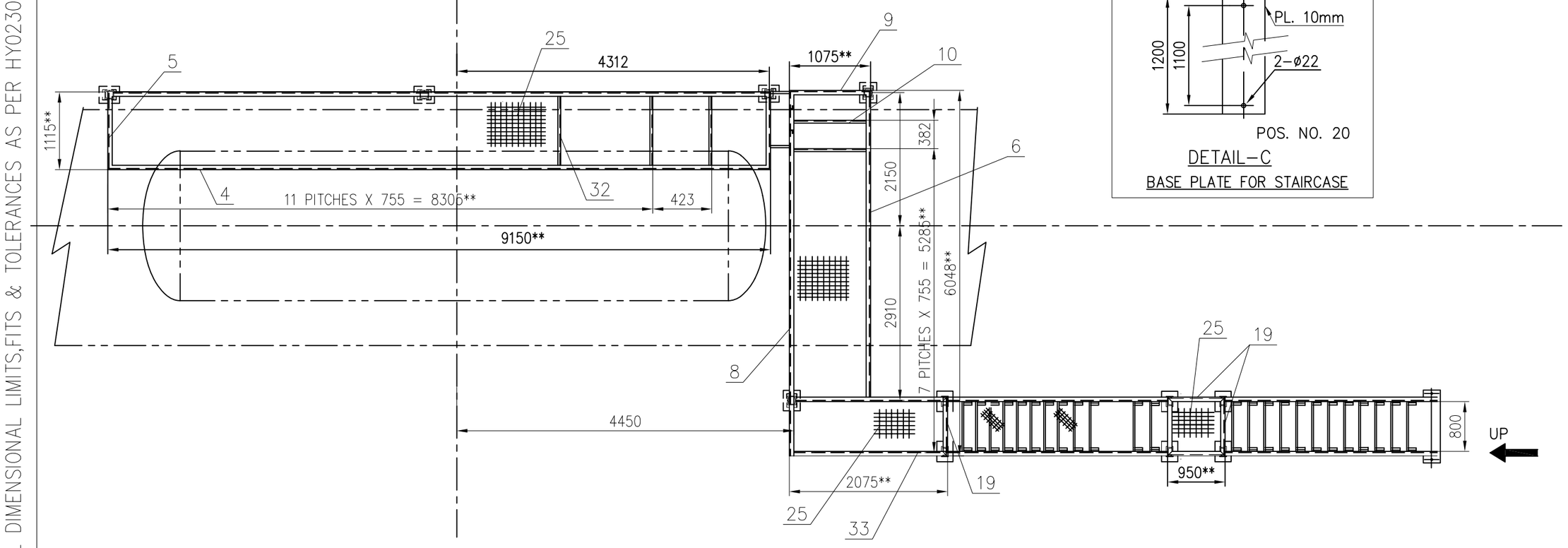


FLOOR LEVEL PLAN

THE INFORMATION ON THIS DOCUMENT IS THE PROPERTY OF BHARAT HEAVY ELECTRICALS LIMITED. IT MUST NOT BE USED DIRECTLY OR INDIRECTLY IN ANY DETRIMENTAL TO THE INTEREST OF THE COMPANY

GENERAL DIMENSIONAL LIMITS,FITS & TOLERANCES AS PER HY0230261

COMPUTER FILE NAME | REF. DRG. NO. | SIGN. AND DATE | INVENTORY NO

| REV. | DATE | ALTERED | CHECKED | APPD | REV. | DATE | ALTERED | CHECKED | APPD | REV. | DATE | ALTERED | CHECKED | APPD | REV. | DATE | ALTERED | CHECKED | APPD | REV. | DATE | ALTERED | CHECKED | APPD |
|---|---|---|---|---|---|---|---|---|---|---|---|---|---|---|---|---|---|---|---|---|---|---|---|---|
| ZONE | | | | | ZONE | | | | | ZONE | | | | | ZONE | | | | | ZONE | | | | |

TYPE OF PRODUCT OR NAME OF CUSTOMER/PROJECT: 270MW PROJECT

BHARAT HEAVY ELECTRICALS LTD. HYDERABAD

| | NAME | SIGN. | DATE | NO.OF VAR. |
|---|---|---|---|---|
| DRN. | A.L RAJAM | | 21.02.11 | NA |
| CHD. | UMESH MENON | | 21.02.11 | |
| APPD. | TSN BHARGAV | | 21.02.11 | |

| DEPT. | GRADE OF TOL.DIM. C/M/F | SCALE | WEIGHT (KG) | REF. TO ASSY DRG. | ITEM NO. | NO.OF ITEMS |
|---|---|---|---|---|---|---|
| HEE CODE 405 | | NTS | NA | NA | NA | NA |

TITLE: DEAERATOR PLATFORM ASSLY.

CARD CODE

DRAWING NO. 2-163-35-11514 REV. 00

SHEET No. 1 NO OF SHEETS 1

FIRST ANGLE PROJECTION

(ALL DIMENSIONS ARE IN mm)

DRG. NO. 2-163-19-11568

SH. OF

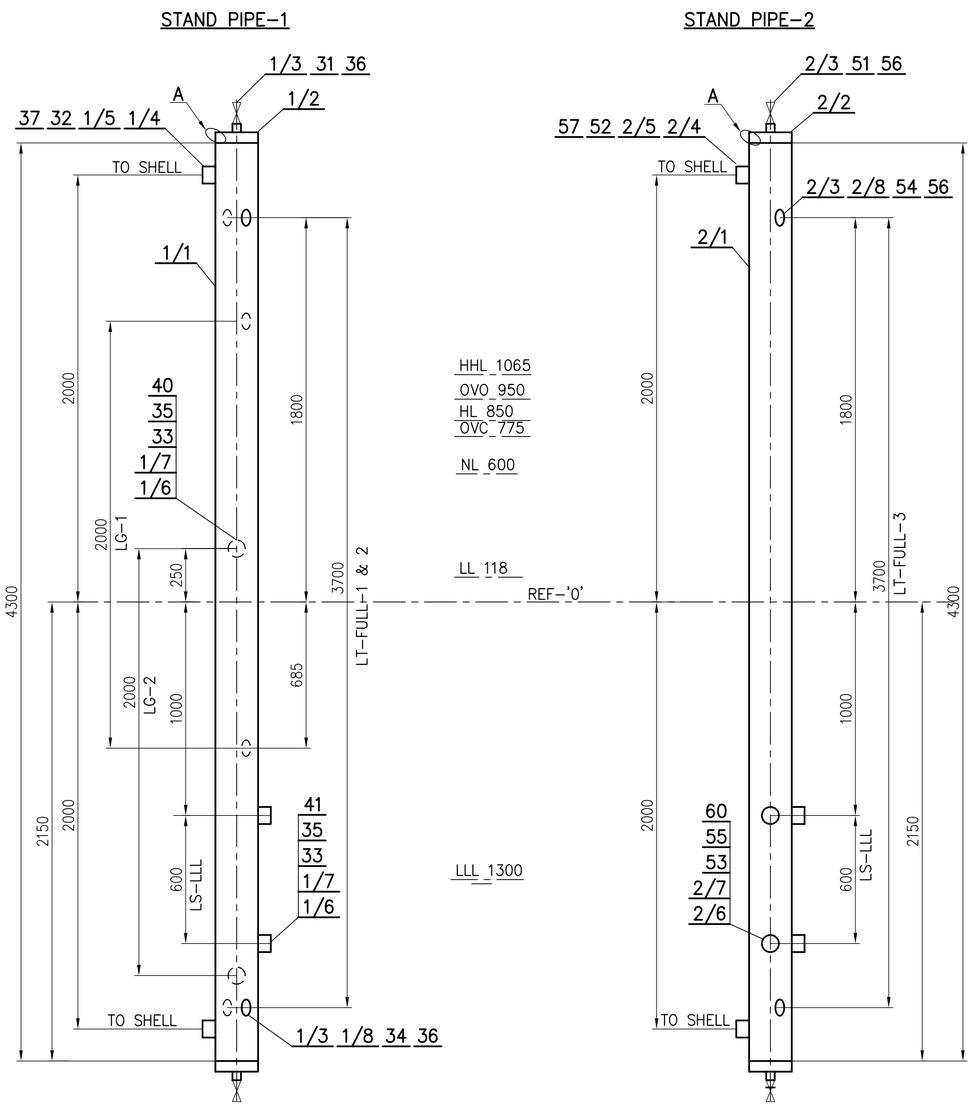


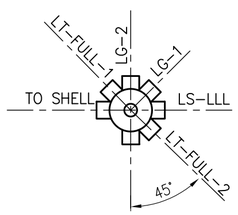


ORIENTATION OF CONN.

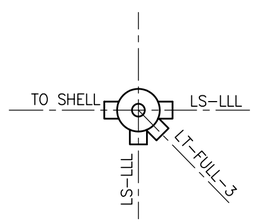


ORIENTATION OF CONN.

*=0.7 X CONNECTION PIPE THICKNESS.

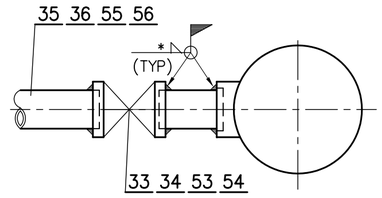


SW CONNECTION DETAIL
(FOR LS, LG & LT-FULL)

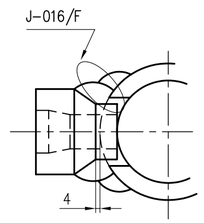


PIPE TO COUPLING WELDING

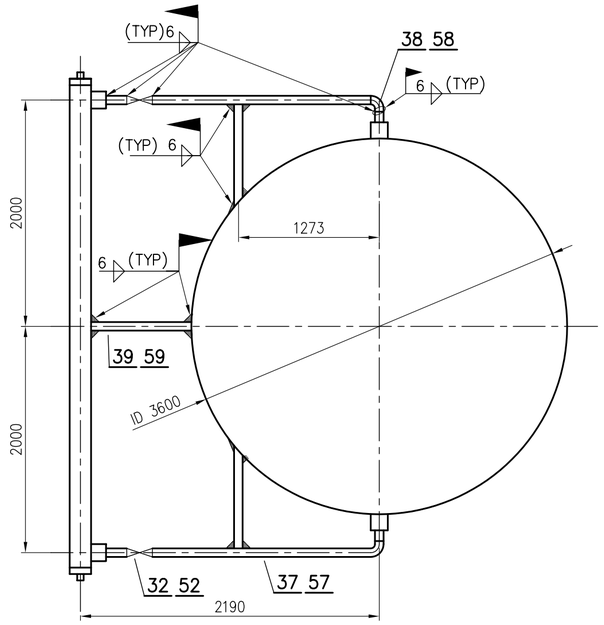


STAND PIPE TO SHELL CONNECTION DETAIL

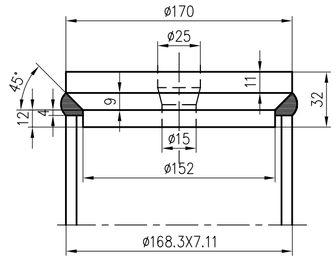


DETAIL-A

NOTES :-

1. HYDRAULIC TEST WILL BE DONE IN SHOP BEFORE DESPATCH AS PER HY0852061.
2. ⚑ REPRESENTS SITE WELDING

INSTRUMENT DETAILS

| SL.No. | DESCRIPTION | C/C | END CONN. | QTY on SP1 | QTY on SP2 |
|---|---|---|---|---|---|
| 1 | LS-LOW LOW LEVEL (BFP TRIP) | 600 | 1" SW | 1 | 2 |
| 2 | LEVEL TRANSMITTER | 3700 | 1/2" SW | 2 | 1 |
| 3 | LEVEL GAUGE | 2000 | 1" SW | 2 | – |
| | | | | | |

GENERAL DIMENSIONAL LIMITS,FITS & TOLERANCES AS PER HY0230261

THE INFORMATION ON THIS DOCUMENT IS THE PROPERTY OF BHARAT HEAVY ELECTRICALS LIMITED.
IT MUST NOT BE USED DIRECTLY OR INDIRECTLY IN ANY DETRIMENTAL TO THE INTEREST OF THE COMPANY

COMPUTER FILE NAME

REF. DRG. NO.

SIGN. AND DATE

INVENTORY NO

| REV. | DATE | ALTERED | CHECKED | APPD | REV. | DATE | ALTERED | CHECKED | APPD | REV. | DATE | ALTERED | CHECKED | APPD | REV. | DATE | ALTERED | CHECKED | APPD | REV. | DATE | ALTERED | CHECKED | APPD |
|---|---|---|---|---|---|---|---|---|---|---|---|---|---|---|---|---|---|---|---|---|---|---|---|---|
| | | | | | | | | | | | | | | | | | | | | | | | | |
| ZONE | | | | | ZONE | | | | | ZONE | | | | | ZONE | | | | | ZONE | | | | |

TYPE OF PRODUCT
OR
OF CUSTOMER/PROJECT

BHARAT HEAVY ELECTRICALS LTD.
HYDERABAD

| | NAME | SIGN. | DATE | NO.OF VAR. |
|---|---|---|---|---|
| DRN. | A.L.RAJAM | | 31.12.10 | NA |
| CHD. | UMESH MOHAN | | 31.12.10 | |
| APPD. | TSN BHARGAV | | 31.12.10 | |

| DEPT. | GRADE OF TOL.DIM. C/M/F | SCALE | WEIGHT (KG) | REF. TO ASSY DRG. | ITEM NO. | NO.OF ITEMS |
|---|---|---|---|---|---|---|
| HEE | | NTS | NA | NA | NA | NA |
| CODE 405 | | | | | | |

TITLE
DEAERATOR STANDPIPE ASSEMBLY.
(FOR STAND PIPE I & II)

CARD CODE N.A.

DRAWING NO. 2-163-19-11568

REV. 00

SHEET No. NO OF SHEETS

RESTRICTED USE
BHEL-HYD EDAS INFORMATICS CENTRE

18-01-2011
11:28:27

This Drawing is printed from Engineering Digital Archive System (EDAS).
Therefore signatures are not essentially required.

FIRST ANGLE PROJECTION

(ALL DIMENSIONS ARE IN mm)

DRG. NO. 1-163-16-11452 SH OF

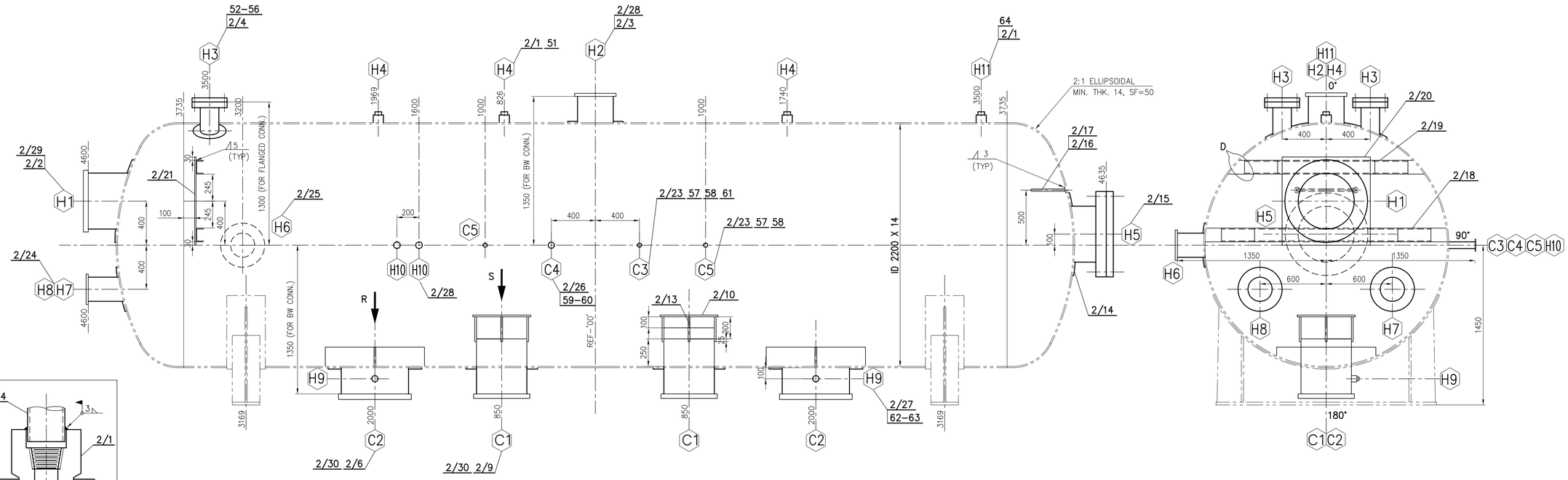


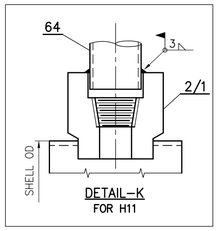


DETAIL-K
FOR H11

PREFIX 1/ TO ALL POS. NOs. EXCEPT POS. NO. 51 TO 64

IMPORTANT:-
SUBCONTRACTOR SHALL TAKE CONCURRENCE FROM ENGINEERING DEPT.
BEFORE MAKING ANY OPENINGS FOR NOZZLES ON THE SHELL & DISHED ENDS

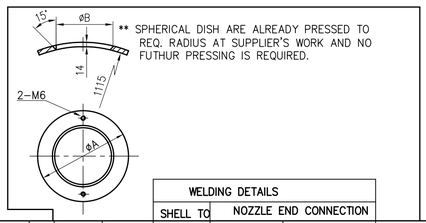


** SPHERICAL DISH ARE ALREADY PRESSED TO REQ. RADIUS AT SUPPLIER'S WORK AND NO FUTHUR PRESSING IS REQUIRED.

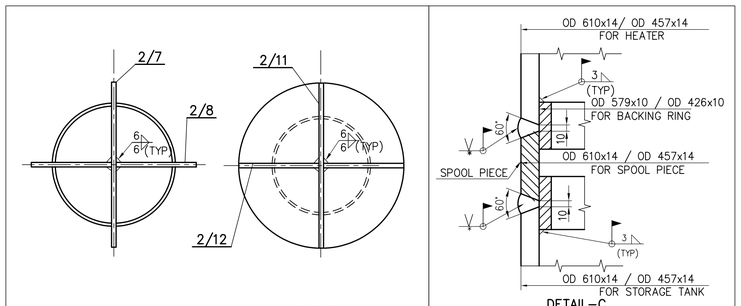


VIEW-R

VIEW-S

DETAIL-C
(FOR C1 & C2 NOZZLE END CONN. AT SITE)

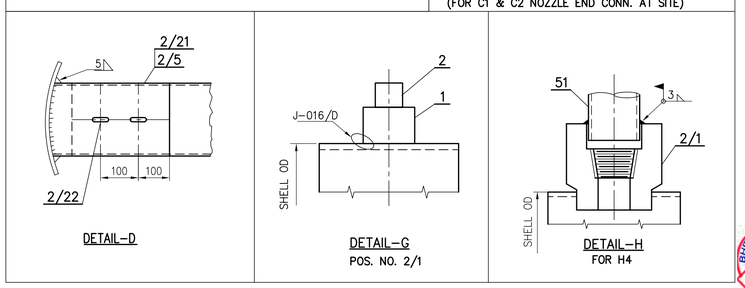


DETAIL-D

DETAIL-G
POS. NO. 2/1

DETAIL-H
FOR H4

LIST OF NOZZLE CONNECTIONS

| REF. | DESCRIPTION | SIZE | OD x THK | TYPE | QTY | øA | øB | WELDING DETAILS: SHELL TO NOZZLE END CONNECTION *NOZZLE | *AT WORKS | *AT SITE | REMARKS | REF. | VAR. |
|---|---|---|---|---|---|---|---|---|---|---|---|---|---|
| H1 | STEAM INLET CONN. | 20" | 508 x 12.7 | BW | 1 | 750 | 524 | DET-D1 | DET-D1 | DET-D5 | | H1 | 01 |
| H2 | CONDENSATE INLET CONN. | 12" | 323.9 x 12.7 | BW | 1 | 500 | 340 | DET-D1 | DET-D1 | DET-D5 | | H2 | 02 |
| H3 | SAFETY RELIEF VALVE CONN. | 6" | 168.3 x 10.97 | ANSI 300# RF | 2 | 300 | 184 | DET-D8 | DET-D8 | DET-D8 | | H3 | 03 |
| H4 | VENT CONN. | 2" | COUPLING 6000# | SW | 3 | | | DET-G | DET-G | DET-H | REFER NOTE 12 | H4 | 04 |
| H5 | TRAY REMOVAL OPENING CONN. | 20" | 508 x 12.7 | ANSI 300# RF | 1 | 750 | 524 | J-007/A | J-015/A | – | | H5 | 05 |
| H6 | CBD TANK VENT | 8" | 219.1 x 12.7 | BW | 1 | 400 | 235 | DET-D1 | DET-D1 | DET-D5 | | H6 | 06 |
| H7 | HPH-5 DRAIN | 8" | 219.1 x 12.7 | BW | 1 | 400 | 235 | DET-D10 | DET-D10 | DET-D5 | WITH DISPERSER | H7 | 07 |
| H8 | HPH-6 DRAIN | 8" | 219.1 x 12.7 | BW | 1 | 400 | 235 | DET-D10 | DET-D10 | DET-D5 | WITH DISPERSER | H8 | 07 |
| H9 | HYDRAZIN & AMMONIA DOSING | 1" | COUPLING 6000# | SW | 2 | | | DET-D6 | DET-D6 | DET-D31 | *** | H9 | 09 |
| H10 | SPARE CONN. | 2" | 60.3 x 8.74 | BW | 2 | | | DET-D17 | DET-D17 | | | H10 | 10 |
| H11 | START-UP VENT CONN. | 2" | COUPLING 6000# | SW | 1 | | | DET-G | DET-G | DET-K | REFER NOTE 15 | H11 | 04 |
| C1 | EQUALISER | 18" | 457 x 14 | BW | 2 | 650 | 473 | DET-D1 | DET-D1 | DET-D5 & C | | C1 | 21 |
| C2 | DOWN COMER | 24" | 610 x 14 | BW | 2 | 850 | 626 | DET-D2 | DET-D2 | DET-D5 & C | | C2 | 22 |
| C3 | PRESSURE GAUGE CONNECTION | 1/2" | COUPLING 6000# | SW | 1 | | | DET-D6 | DET-D6 | DET-D31 | *** | C3 | 23 |
| C4 | THERMOWELL CONN. | M33x2 | | SCREWED | 1 | | | J-008/A | **** | SCREW THERMOWELL | SPECIAL COUPLING | C4 | 24 |
| C5 | PRESSURE TRANSMITTER CONN. | 1/2" | COUPLING 6000# | SW | 2 | | | DET-D6 | DET-D6 | DET-D31 | *** | C5 | 23 |

* REFER NOTES (LIST OF NOZZLE CONNECTIONS).

NOTES (LIST OF NOZZLE CONN.):-

FOR DETAILS D1 TO D32 REFER DRG. 1-163-10-11267.

FOR DETAILS J-001/F, J-002/F, J-007/F, J-008/F, J-015/F, J-014/D REFER DRG. 2-163-10-00014.

FOR DET-C, D, F, G, H, K, R & S REFER THIS DRG.

*** SW PIPE TO COUPLING AFTER REMOVING PLUG.

**** SCREW PLUG WITH WASHER

NOTES:-

1) ALL FLANGE BOLT HOLES SHALL STRADDLE NORMAL CENTRE LINES OF VESSEL.
2) ALL FABRICATED NOZZLES TO BE FULLY RADIOGRAPHED.
3) HYDROTEST BLANKING PLATES SHALL BE REMOVED ONLY AT SITE.
4) WPS FOR FILLET WELDS ON SHELL SHALL BE AS PER J-002/F.
5) ALL LONGITUDINAL AND CIRCUMFERENTIAL WELDS ARE TO BE BACK-GOUGED TO SOUND METAL.
6) MAGNETIC PARTICLE TEST REQUIRED ONLY AT NOZZLE TO HEAD WELDS AND NOZZLE TO SHELL WELDS.
7) VESSEL WILL BE DESPATCHED IN SINGLE PIECE.
8) INSIDE EDGES OF ALL PROJECTED NOZZLES SHALL BE ROUNDED OFF.
9) NOZZLES WHICH OVERLAP C-SEAMS SHALL MEET THE REQUIREMENTS OF UW-14
10) BOLTING TO SECURE HEATER TO STORAGE TANK IS 8 No'S OF M27x120
11) HYDROSTATIC TEST AS PER HY0852061.
12) NOZZLE H4 SHALL BE PLUGED AT WORKS FOR HYDROTEST PURPOSE. WHICH SHALL THEN BE REMOVED AT SITE AND VENT ORIFICE ASSLY (POS. NO. 51) AS PER RELEVANT DRG. SHALL BE WELDED AS PER DET-G FOR H4.
13) ⚑ INDICATES SITE WELDING.
14) GLOBE VALVE FOR VENT ORIFICE NOZZLE (H4) SHALL BE KEPT FULLY OPEN DURING OPERATION.
15) NOZZLE H11 SHALL BE PLUGED AT WORKS FOR HYDROTEST PURPOSE. WHICH SHALL THEN BE REMOVED AT SITE AND 2" SS PIPE (POS. NO. 64) SHALL BE WELDED AS PER DET-K FOR H11.

IMPORTANT NOTES ON DEAERATOR VENT PIPING

1) NO SHARP BENDS AND TRAPS ARE ALLOWED IN VENT PIPING.
2) VENT PIPE SHALL RISE VERTICALLY FROM DEAERATOR HEATER IN A SHORT LENGTH OF PIPE
3) AVOIDE LONG LINES WITH GREAT NUMBERS OF TURNS
4) HORIZONTAL RUNS SHALL BE AVOIDED IN VENT PIPING.
5) DO'NT JOIN INDIVIDUAL VENT LINES WITH A COMMON HEADER.

GENERAL DIMENSIONAL LIMITS,FITS & TOLERANCES AS PER HY0230261

| REV. | DATE | ALTERED | CHECKED | APPD |
|---|---|---|---|---|
| ZONE | | | | |

TYPE OF PRODUCT
OR
OF CUSTOMER/PROJECT

BHARAT HEAVY ELECTRICALS LTD.
HYDERABAD

| | NAME | | DATE | NO.OF VAR. |
|---|---|---|---|---|
| DRN. | A.L.RAJAM | | 29.03.10 | N.A |
| CHD. | UMESH MENON | | 29.03.10 | |
| APPD. | B SRINIVAS | | 29.03.10 | |

DEPT. HEE | CODE 405 | GRADE OF TOL.DIM. C/M/F | SCALE N.T.S | WEIGHT (KG) N.A. | REF. TO ASSY DRG. N.A | ITEM NO. N.A | NO.OF ITEMS N.A

TITLE
NOZZLE DETAIL ASSLY.
(FOR DEAERATOR HEATER)

CARD CODE

DRAWING NO. 1-163-16-11452 | REV. 00

SHEET No. 1 | NO OF SHEETS 1

THE INFORMATION ON THIS DOCUMENT IS THE PROPERTY OF BHARAT HEAVY ELECTRICALS LIMITED.
IT MUST NOT BE USED DIRECTLY OR INDIRECTLY IN ANY WAY DETRIMENTAL TO THE INTEREST OF THE COMPANY

COMPUTER FILE NAME | REF. DRG. NO. | SIGN. AND DATE | INVENTORY NO

BHEL-HYD EDAS RESTRICTED USE
11-06-2010 09:10:51
This Drawing is printed from Engineering Digital Archive System (EDAS).
Therefore signatures are not essentially required.

FIRST ANGLE PROJECTION

(ALL DIMENSIONS ARE IN mm)

DRG. NO. 1-163-11-11364 SH OF

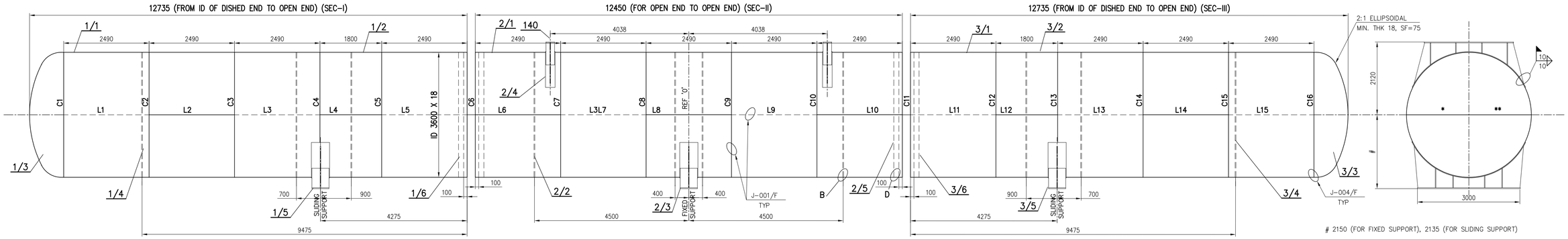


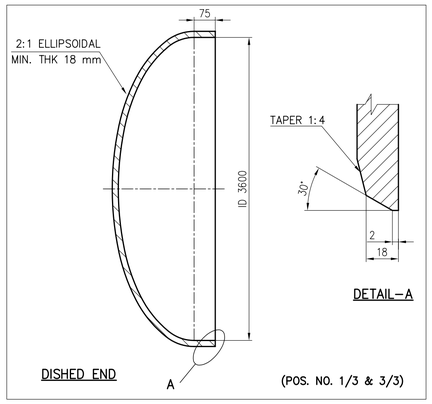


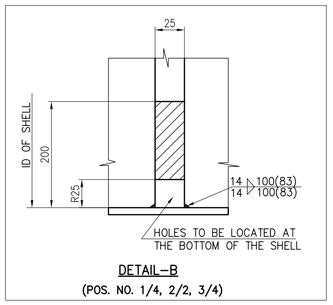


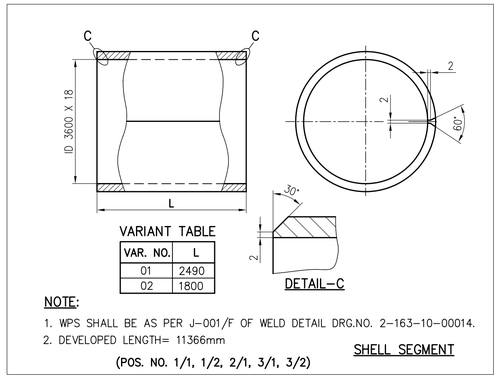


VARIANT TABLE

| VAR. NO. | L |
|---|---|
| 01 | 2490 |
| 02 | 1800 |

NOTE:

1. WPS SHALL BE AS PER J-001/F OF WELD DETAIL DRG.NO. 2-163-10-00014.
2. DEVELOPED LENGTH= 11366mm

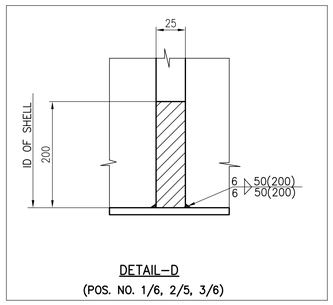


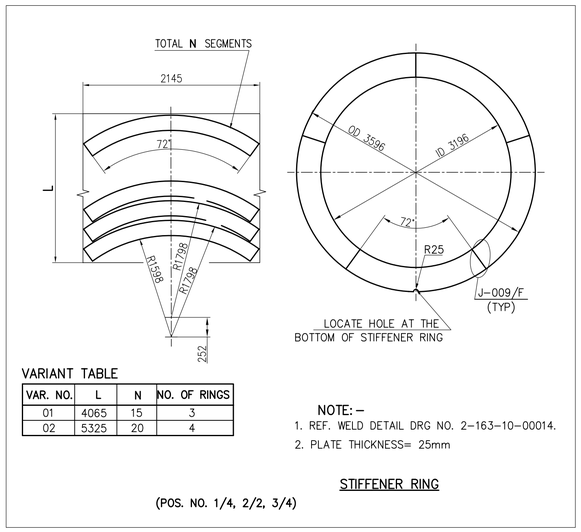


VARIANT TABLE

| VAR. NO. | L | N | NO. OF RINGS |
|---|---|---|---|
| 01 | 4065 | 15 | 3 |
| 02 | 5325 | 20 | 4 |

NOTE:-

1. REF. WELD DETAIL DRG NO. 2-163-10-00014.
2. PLATE THICKNESS= 25mm

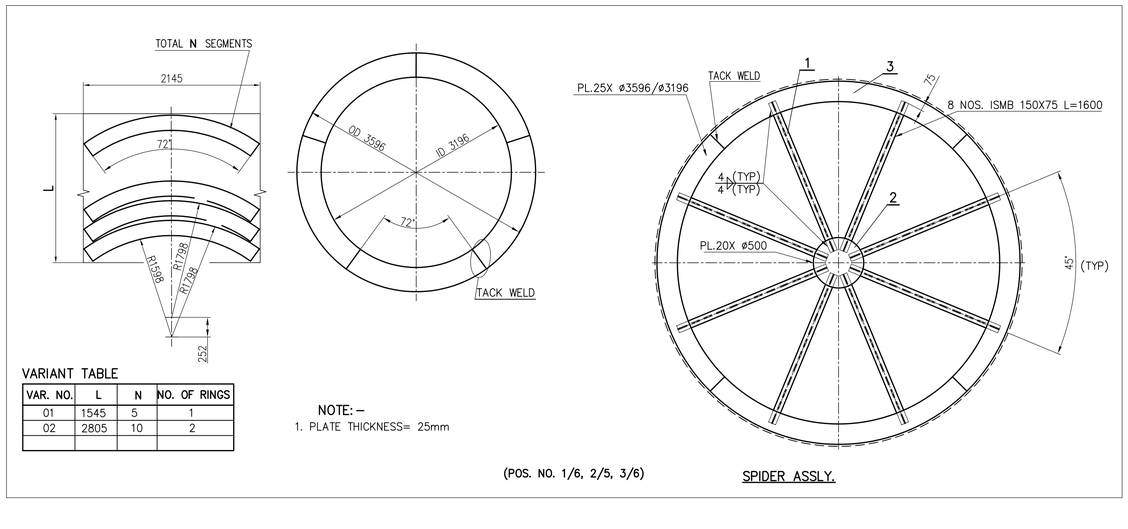


VARIANT TABLE

| VAR. NO. | L | N | NO. OF RINGS |
|---|---|---|---|
| 01 | 1545 | 5 | 1 |
| 02 | 2805 | 10 | 2 |
| | | | |

NOTE:-

1. PLATE THICKNESS= 25mm

NOTES:-

1. ALL LONGITUDINAL AND CIRCUMFERENTIAL WELDS ARE TO BACK GOUGED TO SOUND METAL
2. ALL BUTT WELD JOINTS TO BE 100 % RADIOGRAPHED.
3. FOR WELD DETAILS & WPS. NOS. REFER DRG. NO. 2-163-10-00014
4. POS. NOs. 1/6, 2/5 & 3/6 ARE REQUIRED TO PREVENT DISTORTION OF SHELL SEGMENTS DURING TRANSPORTATION, TO BE REMOVED AFTER WELDING THE SECTIONS AT SITE.
5. DURING THE FIT UP OF DISHED END TO SHELL A REFERENCE LINE SHALL BE MARKED ON THE SHELL AT A DISTANCE OF 100MM FROM THE END OF THE SHELL , WHICH SHALL BE TRANSFERED BACK AFTER WELDING, TO IDENTIFY WELD LINE.

PREFIX 1/, 2/ & 3/ FOR POS. NOs. FOR SEC-I, II & III RESPECTIVELY, EXCEPT POS. NO. 140.

THE INFORMATION ON THIS DOCUMENT IS THE PROPERTY OF BHARAT HEAVY ELECTRICALS LIMITED.
IT MUST NOT BE USED DIRECTLY OR INDIRECTLY IN ANY WAY DETRIMENTAL TO THE INTEREST OF THE COMPANY

GENERAL DIMENSIONAL LIMITS,FITS & TOLERANCES AS PER HY0230261

| REV. | DATE | ALTERED | CHECKED | APPD |
|---|---|---|---|---|
| ZONE | | | | |

TYPE OF PRODUCT
OR
OF CUSTOMER/PROJECT

BHARAT HEAVY ELECTRICALS LTD.
HYDERABAD

| | NAME | SIGN. | DATE | NO.OF VAR. |
|---|---|---|---|---|
| DRN. | A.L RAJAM | | 11.05.10 | |
| CHD. | UMESH MENON | | 11.05.10 | N.A |
| APPD. | B SRINIVAS | | 11.05.10 | |

| DEPT. | GRADE OF TOL.DIM. | SCALE | WEIGHT (KG) | REF. TO ASSY DRG. | ITEM NO. | NO.OF ITEMS |
|---|---|---|---|---|---|---|
| HEE CODE 405 | C/M/F | N.T.S | N.A | N.A | N.A | N.A |

TITLE
STORAGE TANK SHELL
(FOR DEAERATOR)

CARD CODE

DRAWING NO. 1-163-11-11364 REV. 00

SHEET No. NO OF SHEETS

BHEL-HYD EDAS RESTRICTED USE

12-05-2010
13:31:38

This Drawing is printed from Engineering Digital Archive System (EDAS).
Therefore signatures are not essentially required.

FIRST ANGLE PROJECTION

(ALL DIMENSIONS ARE IN mm)

DRG. NO. 3-163-16-11682

NOTES:

1. POS. NO. 1/1 FOR SHELL ASSLY. REFER DRG NO. 3-163-16-11659
2. POS. NOS. 1/2, 51-61 FOR NOZZLE ASSLY. REFER DRG. NO. 1-163-16-11459
3. POS. NO. 1/3 FOR WATER BOX ASSLY. REFER DRG. NO. 1-163-16-11282
4. POS. NO. 1/4 FOR TRAY ASSLY. REFER DRG. NO. 1-163-16-11283

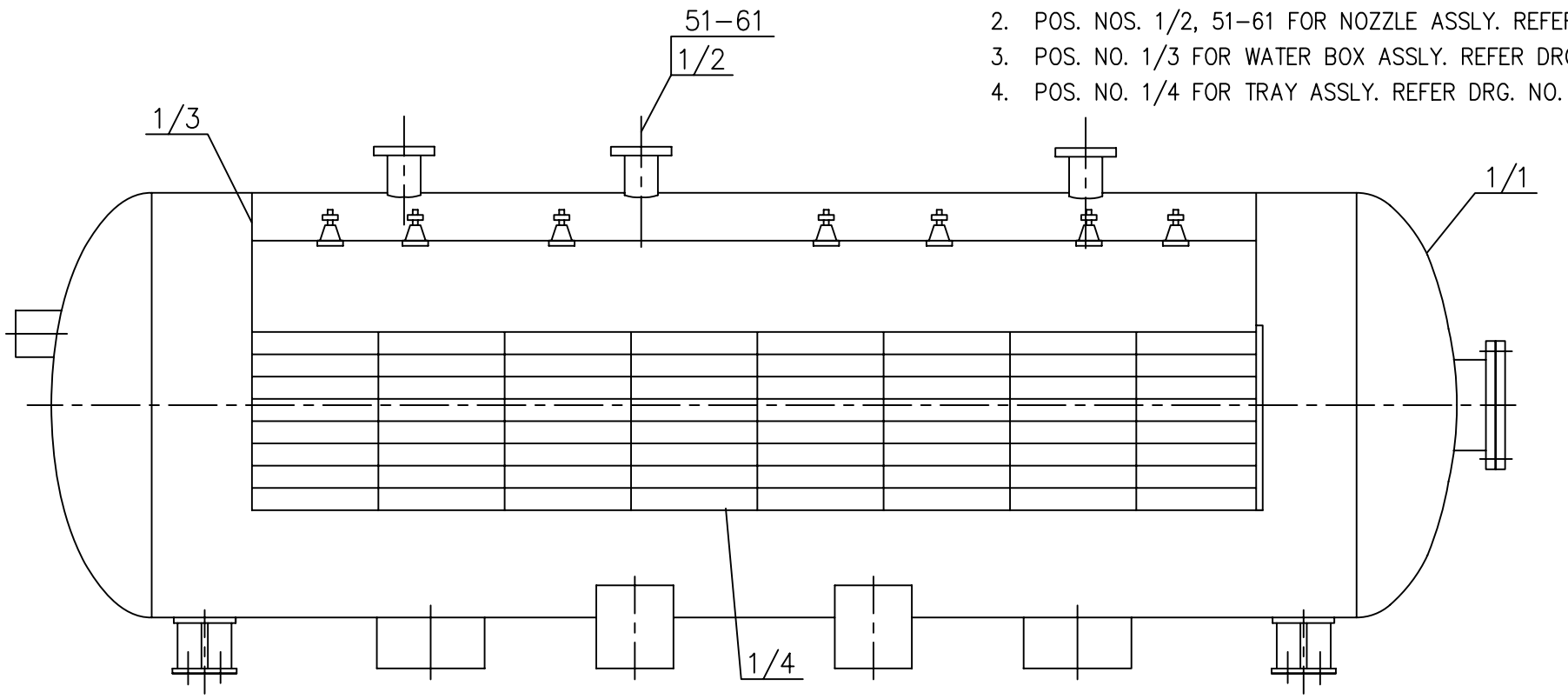


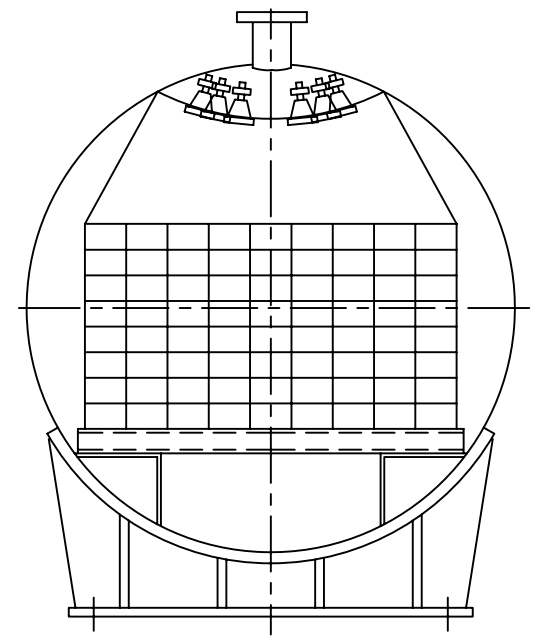

DESIGN DATA

| DESCRIPTION | | | |
|---|---|---|---|
| DESIGN PRESSURE | | Kg/sq.cm (g) | 9 & FULL VACUUM |
| TEST PRESSURE | | Kg/sq.cm (g) | 11.7 |
| DESIGN TEMP. MAX/MIN | | °C | 360/0 |
| TEST TEMP. MAX/MIN | | °C | AMBIENT/17 |
| CORROSION ALLOW. IN mm | SHELL/ HEADS | | 3.2 |
| | RF PADS/ NOZZLES/ FLANGES mm | | 1.6 |
| RADIO GRAPHY | | | 100% |
| JOINT EFFICIENCY | | | 1.0 |
| INSPECTION | | | BHEL & LLOYDS & * |
| DESPATCH WT. (A) | | KG | 29478 |
| LOOSE ITEMS WT. IN FABRICATOR SCOPE (B) | | KG | 256 |
| LOOSE ITEMS WT. IN BHEL SCOPE (C) | | KG | 574 |
| TOTAL WT. (A+B+C) | | KG | 30308 |
| PWHT | | | NOT REQUIRED |

* CUSTOMER APPOINTED TPI (OPTIONAL), FOR APPLICABILITY REFER QP.

| | |
|---|---|
| DESIGN, FABRICATION & TESTING CODE | ASME SEC VIII DIV.1, YEAR AND ADDENDA LATEST |
| WORK ORDER No. | REFER ANNEXURE TO P.O |
| VESSEL No. | REFER ANNEXURE TO P.O |
| WELD DET. & WPS DRG. No. | 2 163 10 00014 |
| NOZZLE DETAIL DRG. No. | 1 163 10 11267 |
| HEADER MATERIAL/ DRG. LIST. | T31631611682-00 |

TYPE OF PRODUCT OR NAME OF CUSTOMER/PROJECT: 600MW DEAERATOR

NOTE:-

1) PAINTING INSIDE: NIL
   OUTSIDE: TWO COATS OF HEAT RESISTANT ALUMINIUM PAINT AS PER AA56134.
2) QUALITY PLAN No. IS INDICATED IN ANNEXURE TO P.O.

| REV. | DATE | ALTERED | CHECKED | APPD |
|---|---|---|---|---|
| | | | | |
| ZONE | | | | |

बीएचईएल BHEL BHARAT HEAVY ELECTRICALS LTD. HYDERABAD

| | NAME | SIGN. | DATE | NO.OF VAR. |
|---|---|---|---|---|
| DRN. | AL RAJAM | | 14.02.11 | NA |
| CHD. | UMESH MENON | | 14.02.11 | |
| APPD. | TSN BHARGAV | | 14.02.11 | |

| DEPT. | GRADE OF TOL.DIM. C/M/F | SCALE | WEIGHT (KG) | REF. TO ASSY DRG. | ITEM NO. | NO.OF ITEMS |
|---|---|---|---|---|---|---|
| HEE CODE 405 | | NTS | NA | NA | NA | NA |

TITLE: HEATER ASSLY. (DEAERATOR)

CARD CODE

DRAWING NO. 3-163-16-11682 REV. 00

SHEET No. NO OF SHEETS

THE INFORMATION ON THIS DOCUMENT IS THE PROPERTY OF BHARAT HEAVY ELECTRICALS LIMITED. IT MUST NOT BE USED DIRECTLY OR INDIRECTLY IN ANY WAY DETRIMENTAL TO THE INTEREST OF THE COMPANY

INVENTORY NO SIGN. AND DATE REF. DRG. NO.

FIRST ANGLE PROJECTION

(ALL DIMENSIONS ARE IN mm)

DRG. NO. 3-163-16-11659

THE INFORMATION ON THIS DOCUMENT IS THE PROPERTY OF BHARAT HEAVY ELECTRICALS LIMITED.
IT MUST NOT BE USED DIRECTLY OR INDIRECTLY IN ANY WAY DETRIMENTAL TO THE INTEREST OF THE COMPANY

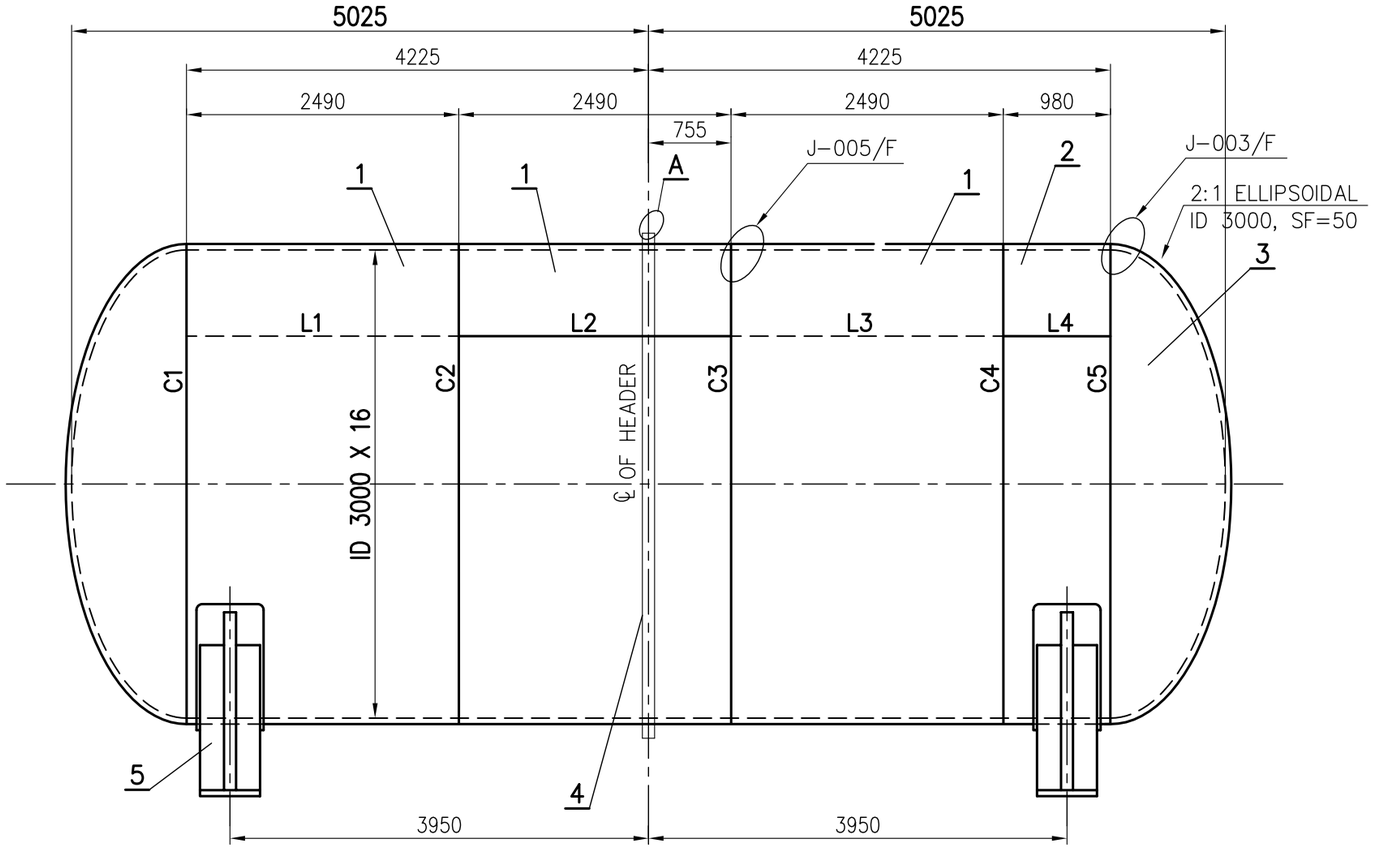


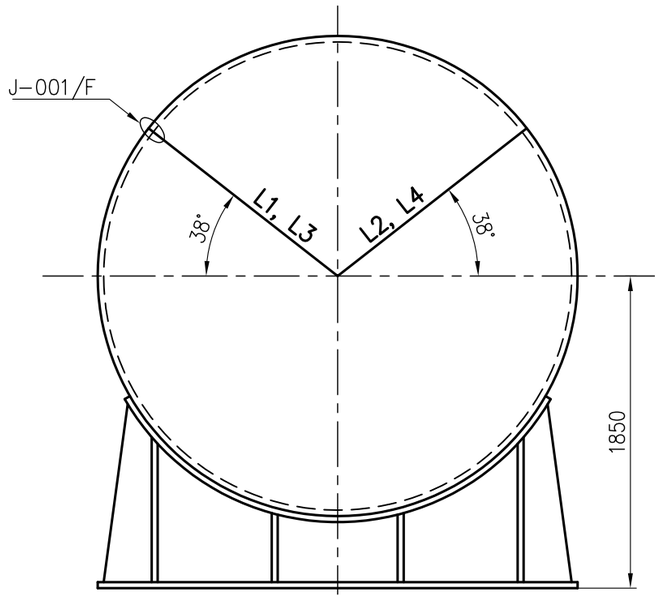


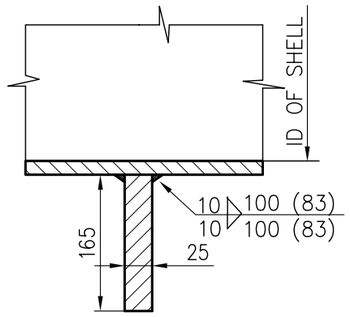


DETAIL-A (POS. NO. 4)

**NOTE:-**

1. DETAIL OF WELDS & WPS. NOS. REF. DRG. NO. 2-163-10-00014
2. RADIO GRAPHY -------- 100 %.
3. ALL LOGITUDINAL & CIRCUMFERENTIAL WELDS ARE TO BE BACK GOUGED TO SOUND METAL.
4. DURING THE FIT UP OF DISHED END TO SHELL A REFERENCE LINE SHALL BE MARKED ON THE SHELL AT A DISTANCE OF 100MM FROM THE END OF THE SHELL , WHICH SHALL BE TRANSFERED BACK AFTER WELDING, TO IDENTIFY WELD LINE.
5. DEVELOPED LENGTH OF POS. NO. 1, 2= 9475

TYPE OF PRODUCT
OR
NAME OF CUSTOMER/PROJECT

BHEL-HYD EDAS ESA

BHARAT HEAVY ELECTRICALS LTD.
HYDERABAD

RESTRICTED USE

| | NAME | SIGN. | DATE | NO.OF VAR. |
|---|---|---|---|---|
| DRN. | A.L.RAJAM | | 10.05.10 | NA |
| CHD. | UMESH MENON | | 10.05.10 | |
| APPD. | B SRINIVAS | | 10.05.10 | |

| REV. | DATE | ALTERED | CHECKED | APPD | REV. | DATE | ALTERED | CHECKED | APPD |
|---|---|---|---|---|---|---|---|---|---|
| | | | | | | | | | |
| ZONE | | | | | ZONE | | | | |

| DEPT. | GRADE OF TOL.DIM. C/M/F | SCALE | WEIGHT (KG) | REF. TO ASSY DRG. | ITEM NO. | NO.OF ITEMS |
|---|---|---|---|---|---|---|
| HEE | | NTS | NA | NA | NA | NA |
| CODE 405 | | | | | | |

TITLE
SHELL ASSLY.
(FOR DEAERATOR HEATER)

CARD CODE

DRAWING NO. 3-163-16-11659

REV. 00

SHEET No. 1 NO OF SHEETS 1

INVENTORY NO | SIGN. AND DATE | REF. DRG. NO.

11-05-2010
08:19:18

This Drawing is printed from Engineering Digital Archive System (EDAS).
Therefore signatures are not essentially required.

FIRST ANGLE PROJECTION

(ALL DIMENSIONS ARE IN mm)

DRG. NO. 3-163-11-11960

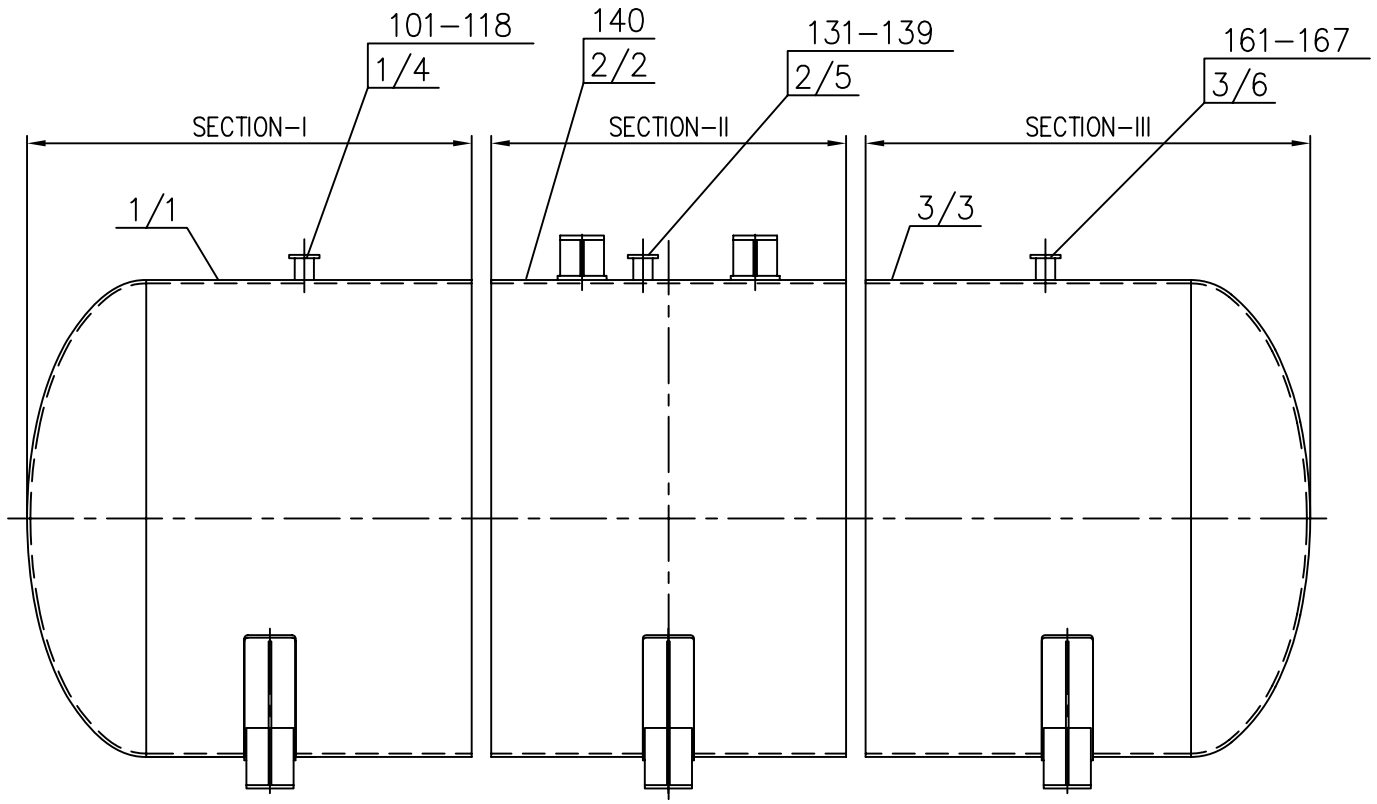


NOTES:

1. POS. NO. 1/1 FOR SHELL ASSLY. SEC-I, REFER DRG NO. 1-163-11-11364
2. POS. NOs. 2/2, 140 FOR SHELL ASSLY. SEC-II, REFER DRG NO. 1-163-11-11364
3. POS. NO. 3/3 FOR SHELL ASSLY. SEC-III, REFER DRG NO. 1-163-11-11364
4. POS. NOs. 1/4, 101-118 FOR NOZZLE ASSLY. SEC-I, REFER DRG NO. 1-163-11-11365
5. POS. NOs. 2/5, 131-139 FOR NOZZLE ASSLY. SEC-II, REFER DRG NO. 1-163-11-11365
6. POS. NOs. 3/6, 161-167 FOR NOZZLE ASSLY. SEC-III, REFER DRG NO. 1-163-11-11365

TABLE-I

| STORAGE TANK SECTION. NO. | DES. WT. IN (Kg) (A) | # IN (Kg) (B) | ## IN (Kg) (C) | TOTAL WT. IN (Kg) (A+B+C) | HEADER MATL. No./ DRG. LIST |
|---|---|---|---|---|---|
| SECTION-I | 26967 | 475 | 1169 | 28611 | T31631111960-00A |
| SECTION-II | 26570 | 1621 | 0 | 28191 | T31631111960-00B |
| SECTION-III | 26530 | 364 | 2 | 26896 | T31631111960-00C |

# LOOSE ITEMS WT. IN FABRICATOR SCOPE
## LOOSE ITEMS WT. IN BHEL SCOPE

DESIGN DATA

| DESCRIPTION | | | |
|---|---|---|---|
| DESIGN PRESSURE | | Kg/sq.cm (g) | 9 & FULL VACUUM |
| TEST PRESSURE | | Kg/sq.cm (g) | 11.7 |
| DESIGN TEMP. MAX/MIN | | °C | 360**/260/0 |
| TEST TEMP. MAX/MIN | | °C | AMBIENT/17 |
| CORROSION ALLOW. IN mm | SHELL/ HEADS | | 3.2 |
| | RF PADS/ NOZZLES/ FLANGES mm | | 1.6 |
| RADIO GRAPHY | | | 100% |
| JOINT EFFICIENCY | | | 1.0 |
| INSPECTION | | | BHEL & LLOYDS & * |
| TOTAL WEIGHT OF ST.TANK | | KG | REFER TABLE-1 |
| DESPATCH WEIGHT | | KG | REFER TABLE-1 |
| PWHT | | | NOT REQUIRED |

* CUSTOMER APPOINTED TPI (OPTIONAL), FOR APPLICABILITY REFER QP.
** 360° C TEMPERATURE APPLICABLE ONLY FOR AVANTA BHANDAR 600MW PROJECT.

| | |
|---|---|
| DESIGN, FABRICATION & TESTING CODE | ASME SEC VIII DIV.1, YEAR AND ADDENDA LATEST |
| WORK ORDER No. | REFER ANNEXURE TO P.O |
| VESSEL No. | REFER ANNEXURE TO P.O |
| WELD DET. & WPS DRG. No. | 2 163 10 00014 |
| NOZZLE DETAIL DRG. No. | 1 163 10 11267 |
| HEADER MATERIAL/ DRG. LIST. | REFER TABLE-1 |

TYPE OF PRODUCT OR NAME OF CUSTOMER/PROJECT: 600MW DEAERATOR

NOTE:-

1) PAINTING INSIDE: STEAM WASHABLE PAINT AS PER AA55151.
   OUTSIDE: TWO COATS OF HEAT RESISTANT ALUMINIUM PAINT AS PER AA56134.
2) FOR NAME PLATE DRG. NO. DETAILS, REFER ANNEXURE TO P.O.
3) QUALITY PLAN No. IS INDICATED IN ANNEXURE TO P.O.

| REV. | DATE | ALTERED | CHECKED | APPD |
|---|---|---|---|---|
| | | | | |
| ZONE | | | | |

BHARAT HEAVY ELECTRICALS LTD.
HYDERABAD

| | NAME | SIGN. | DATE | NO.OF VAR. |
|---|---|---|---|---|
| DRN. | AL RAJAM | | 14.02.11 | NA |
| CHD. | UMESH MENON | | 14.02.11 | |
| APPD. | TSN BHARGAV | | 14.02.11 | |

| DEPT. | GRADE OF TOL.DIM. C/M/F | SCALE | WEIGHT (KG) | REF. TO ASSY DRG. | ITEM NO. | NO.OF ITEMS |
|---|---|---|---|---|---|---|
| HEE / CODE 405 | | NTS | NA | NA | NA | NA |

TITLE: ST.TANK ASSLY. (DEAERATOR)

CARD CODE

DRAWING NO. 3-163-11-11960 REV. 00

SHEET No. NO OF SHEETS

THE INFORMATION ON THIS DOCUMENT IS THE PROPERTY OF BHARAT HEAVY ELECTRICALS LIMITED.
IT MUST NOT BE USED DIRECTLY OR INDIRECTLY IN ANY WAY DETRIMENTAL TO THE INTEREST OF THE COMPANY

INVENTORY NO | SIGN. AND DATE | REF. DRG. NO.