ALL DIMENSIONS ARE IN MILLIMETRES. FOR TOLERANCES OF UNTOLERANCED DIMENSIONS DURING MANUFACTURE REFER RELEVANT QCP / QP.

DRAWING NO. 3-V-0000-06556

SL. No.	DRG. No. / COMP. CODE	RAW MATERIAL: MATL. SPECN	SIZE	CODE	SCRAP SORT	WT. (kg)	HEAT TREATMENT	L	L1	L2	L3	L4	L5	L6	θ	θ1°	øD	T	R	FINISHED Wt.(kg)	APPLICABLE TYPE No.
01	3-V-C203-06556 / 931022580000	SA 106 Gr.B ATTEST	PIPE ø21.3x3.73-539	15 082 002	10	0.87	NORMALISED	175	40	114	134	76	400	41	38°	128°	21.3	4	60	0.87	C203
02	3-V-C201-06556 / 931022570000		PIPE ø21.3x3.73-579	15 082 002	10	0.94	NORMALISED	250	36	87	130	76	450	66	34°	124°	21.3	4	60	0.94	C201
03	3-V-C195-06556/04 / 931022590000		PIPE ø33.4x4.55-620	15 182 011	10	1.46	NORMALISED	120	60.7	137.2	221	71	450	61	34°	124°	33.4	4	102	1.46	C195
04	3-V-C243-06556 / 931028780000		PIPE ø33.4x3.38-563	15 082 010	10	1.41	NORMALISED	70	71.2	130	231.5	60	400	32	40°	130°	33.4	3.38	102	1.41	C243
05	3-V-C245-06556 / 931028790000		PIPE ø33.4x3.38-594	15 082 010	10	1.47	NORMALISED	70	48	207	208.3	60	450	46	27°	117°	33.4	3.38	102	1.47	C245
06	3-V-M306-06556/01 / 931031170000		PIPE ø48.3x5.08-619	15 082 021	10	3.35	NORMALISED	60	60.2	184.6	240.86	48	450	40	30°	120°	48.3	5.08	115	3.35	M306
07	3-V-M307-06556/01 / 931031180000		PIPE ø48.3x5.08-577	15 082 021	10	3.12	NORMALISED	60	50	257.7	190.7	35	450	129	5°	95°	48.3	5.08	115	3.12	M307
08	3-V-M308-06556/01 / 931031190000		PIPE ø48.3x5.08-544	15 082 021	10	2.94	NORMALISED	60	42	152.7	222.8	59	400	104	21°	111°	48.3	5.08	115	2.94	M308
09	3-V-M309-06556/01 / 931031200000		PIPE ø48.3x5.08-604	15 082 021	10	3.27	NORMALISED	60	42	152.7	222.8	119	400	164	21°	111°	48.3	5.08	115	3.27	M309
10	3-V-C258-06556/02 / 931031620000		PIPE ø33.4x4.55-624	15 182 011	10	1.56	NORMALISED	70	48	207	208.3	90	450	76	27°	117°	33.4	3.38	102	1.56	C258
11	3-V-NG52-06556 / 932022860000	SA312TP316 ATTEST	PIPE ø33.4x4.55-624	15 193 005	46	1.56	SH	70	48	207	208.3	90	450	76	27°	117°	33.4	3.38	102	1.56	NG52
12	3-V-NG69-06556/01 / 932024470000	SA335 P22 ATTEST	PIPE ø33.4x4.55-624	15 191 012	20	1.56	N & T	70	48	207	208.3	90	450	76	27°	117°	33.4	3.38	102	1.56	NG69

12.5

DETAIL-A

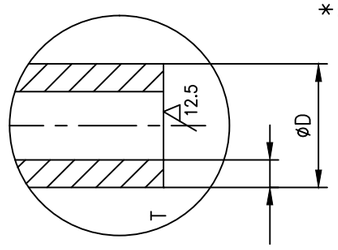

*CLEAN THIS SURFACE UPTO THIS LENGTH FOR WELDING

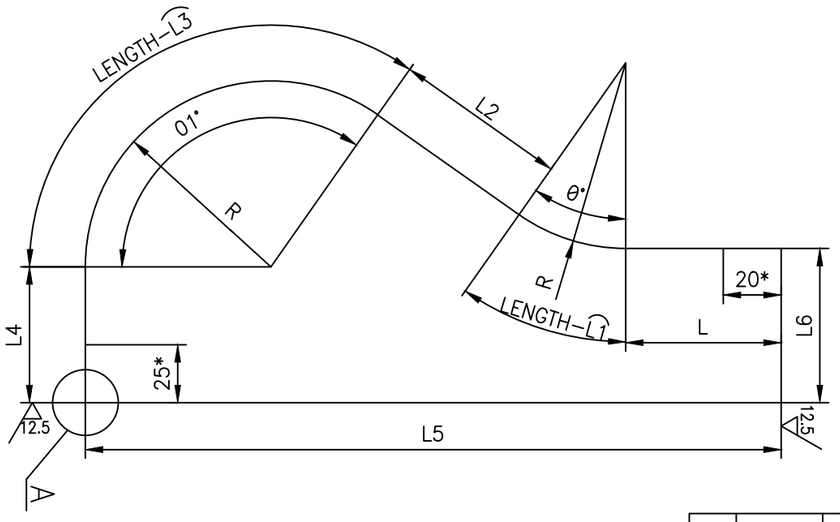

NO OFF	DESCRIPTION	MATL CODE	MATL SPECN	HEAT TREATMENT	SCRAP SORT	NET WT (kg)	GROSS WT (kg)	DRAWING No	ITEM No

TYPE OF PRODUCT OR NAME OF CUSTOMER/PROJECT: CS

DRAWING REDRAWN WITH REV.10 ON 26.04.2013

BHARAT HEAVY ELECTRICALS LTD.
UNIT: HIGH PRESSURE BOILER PLANT.
TIRUCHIRAPALLI 620014.
365-121

	NAME	SIGN	DATE	NO.OF VAR.
DRN	K.P.LEON		08.08.03	–
CHD	P.BOOMINATHAN		08.08.03	
APPD	K.S.RAMAN		08.08.03	

REV	DATE	ALTERED SSK
10	26.04.13	CHD & APPD SSK & KRS

SL.NO. 03 DIMENSIONS 120, 60.7,137.2 & 221 WERE 250, 36, 87 & 130.

DCP 801501

CAUTION: The information on this document is the property of BHARAT HEAVY ELECTRICALS LTD. It must not be used directly or indirectly in any way detrimental to the interest of the company.

DEPT: VL
CODE: 320
SCALE: NTS.
WEIGHT (KG): REF. TABLE
REFERENCE INFORMATIONS
NO. OF ITEMS: –

TITLE: TUBE OF BYPASS
CARD CODE: U 01
DRAWING NO. 3-V-0000-06556
REV 10

Size A3