FIRST ANGLE PROJECTION

(ALL DIMENSIONS ARE IN mm)

DRG. NO. 0-301-01-105980 SH. 01 OF 03

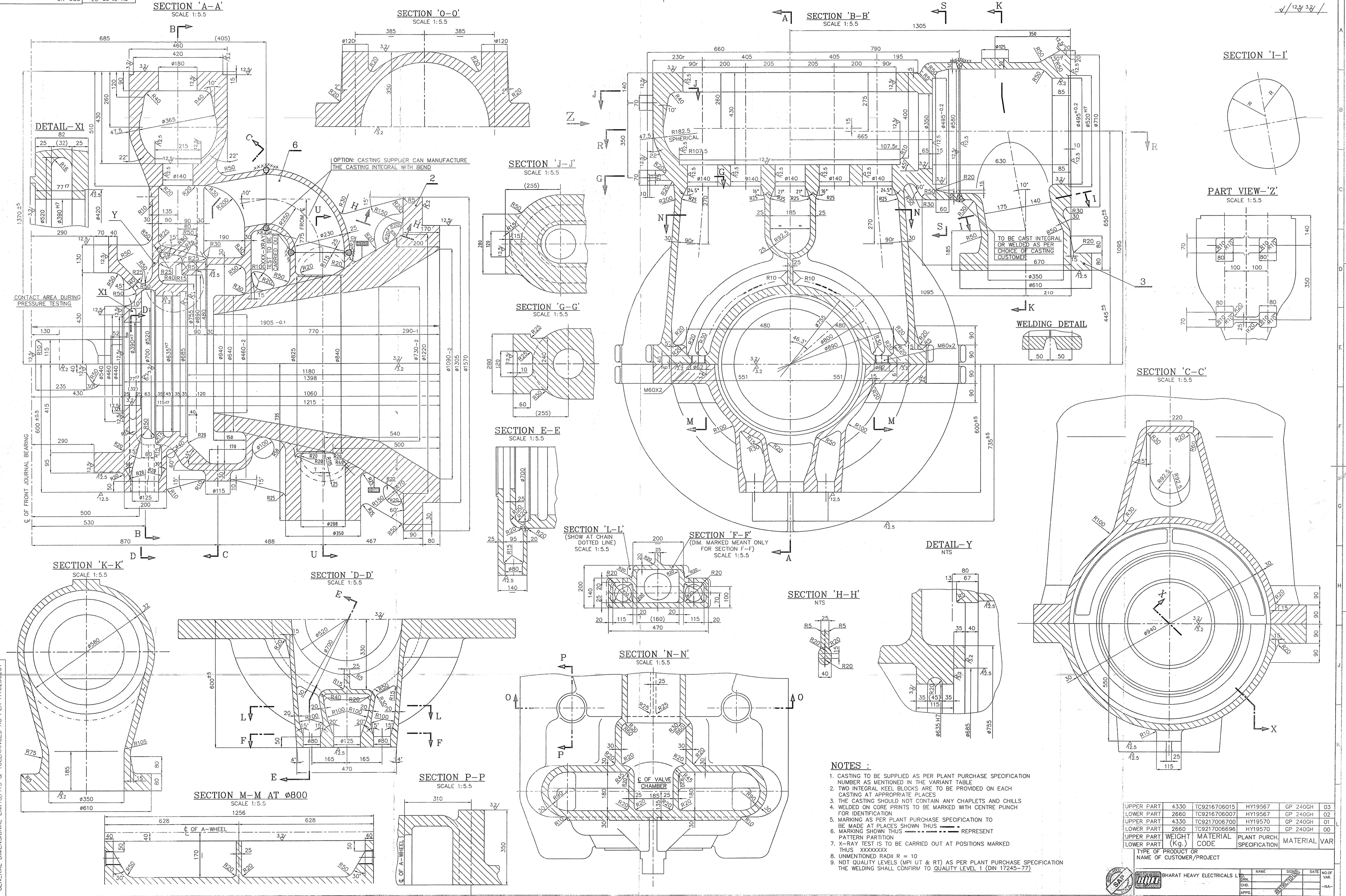

NOTES :

1. CASTING TO BE SUPPLIED AS PER PLANT PURCHASE SPECIFICATION NUMBER AS MENTIONED IN THE VARIANT TABLE
2. TWO INTEGRAL KEEL BLOCKS ARE TO BE PROVIDED ON EACH CASTING AT APPROPRIATE PLACES
3. THE CASTING SHOULD NOT CONTAIN ANY CHAPLETS AND CHILLS
4. WELDED ON CORE PRINTS TO BE MARKED WITH CENTRE PUNCH FOR IDENTIFICATION
5. MARKING AS PER PLANT PURCHASE SPECIFICATION TO BE MADE AT PLACES SHOWN THUS ——— REPRESENT
6. MARKING SHOWN THUS — · — · — PATTERN PARTITION
7. X-RAY TEST IS TO BE CARRIED OUT AT POSITIONS MARKED THUS XXXXXXXX
8. UNMENTIONED RADII R = 10
9. NDT QUALITY LEVELS (MPI UT & RT) AS PER PLANT PURCHASE SPECIFICATION THE WELDING SHALL CONFIRM TO QUALITY LEVEL 1 (DIN 17245-77)

UPPER PART	4330	TC9216706015	HY19567	GP 240GH	03
LOWER PART	2660	TC9216706007	HY19567	GP 240GH	02
UPPER PART	4330	TC9217006700	HY19570	GP 240GH	01
LOWER PART	2660	TC9217006696	HY19570	GP 240GH	00
UPPER PART	WEIGHT (Kg.)	MATERIAL CODE	PLANT PURCH. SPECIFICATION	MATERIAL	VAR
LOWER PART					

TYPE OF PRODUCT OR NAME OF CUSTOMER/PROJECT

BHARAT HEAVY ELECTRICALS LTD.

	NAME	SIGN.	DATE	NO. OF VAR.
DRN.				
CHD.				-NA-
APPD.				

DEPT. - I.T.D. DEPT. CODE 415 | UNTOL. DIMS. GR. C/M/F- | SCALE 1:5.5 NTS | WEIGHT (KG) -NA- | REF. TO ASSY. DRG. -N.A.- | ITEM NO. -NA.- | NO. OF ITEMS -N.A.-

TITLE OUTER CASING BZ (FOR BFPDT K1401-2)

CARD CODE -NA- | DRAWING NO. 0-301-01-105980 | REV. 00 | SHT. No 01 | NO. OF SHT. 03

REV.	DATE	ALTERED CHD/APPD	ZONE

THE INFORMATION ON THIS DOCUMENT IS THE PROPERTY OF BHARAT HEAVY ELECTRICALS LIMITED. IT MUST NOT BE USED DIRECTLY OR INDIRECTLY IN ANY WAY DETRIMENTAL TO THE INTEREST OF THE COMPANY.

GENERAL DIMENSIONAL LIMITS, FITS & TOLERANCES AS PER HY0230261

INVENTORY NO | SIGN. AND DATE | REF. DRG. NO. | COMPUTER FILE NAME

13-06-2009
11:42:34

This Drawing is printed from Engineering Digital Archive System (EDIAS). Therefore signatures are not essentially required.

FIRST ANGLE PROJECTION

(ALL DIMENSIONS ARE IN mm)

DRG. NO. 0-301-01-105985 SH. 02 OF 03

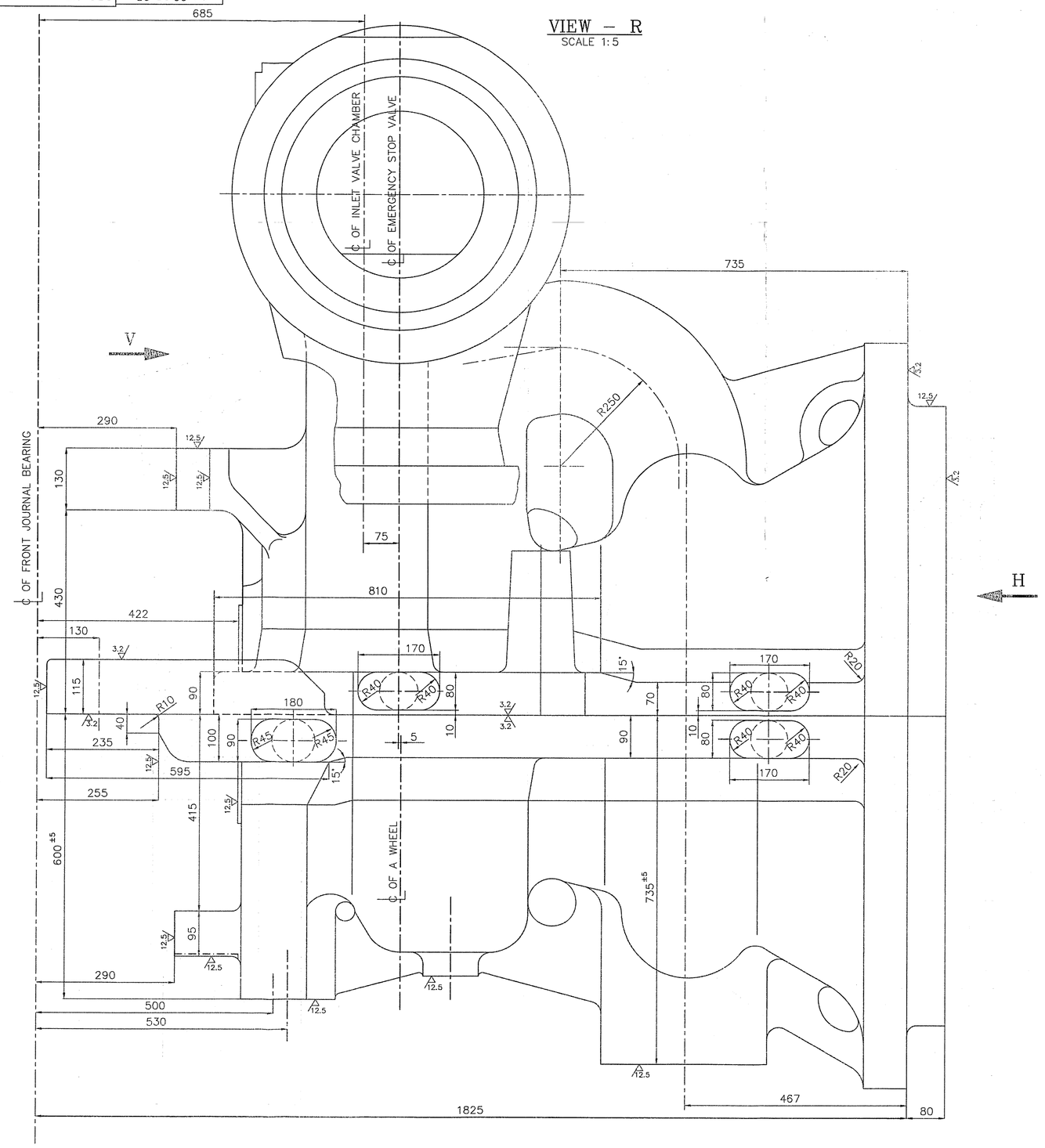

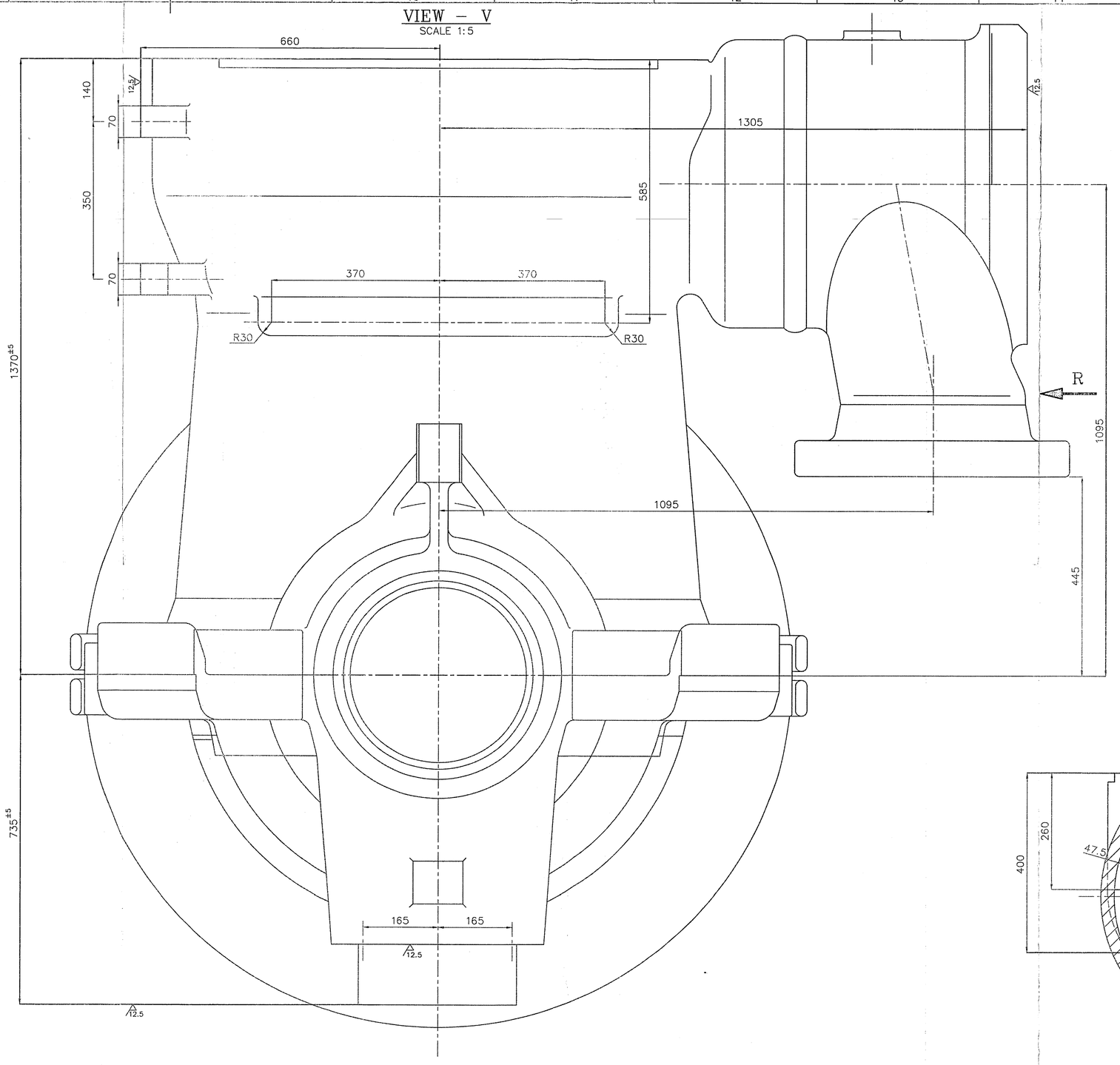

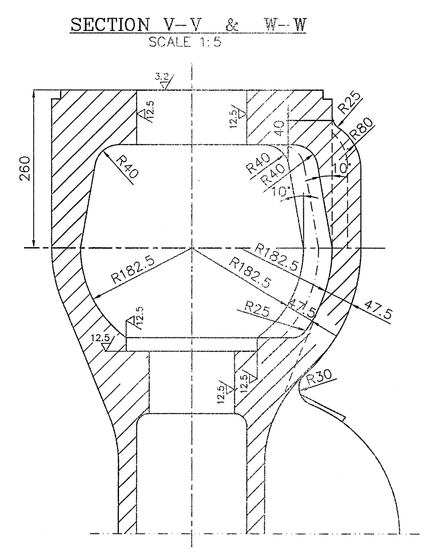

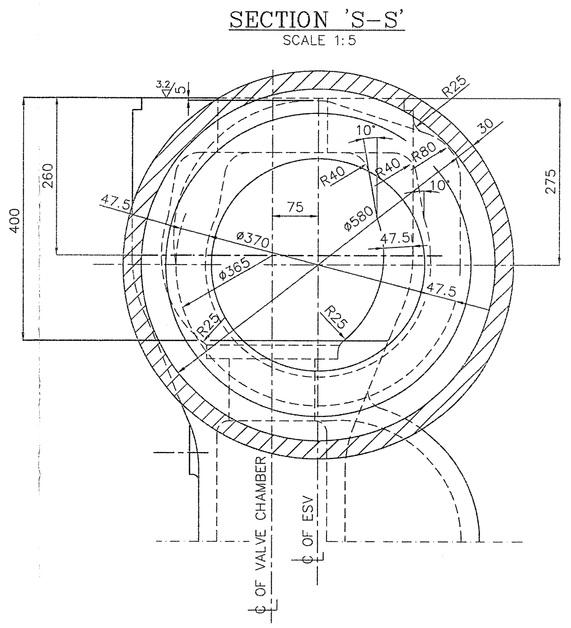

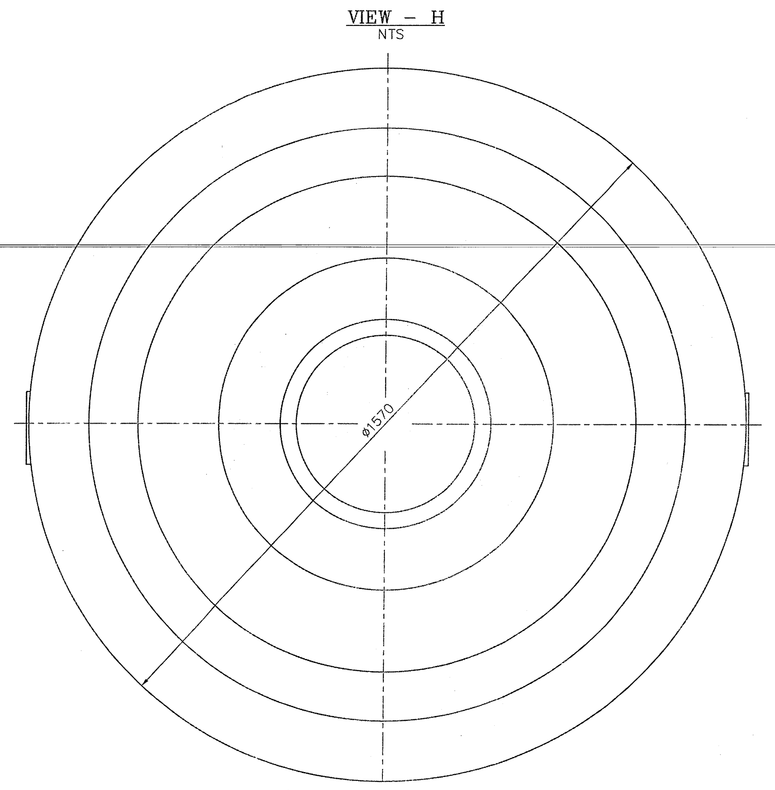

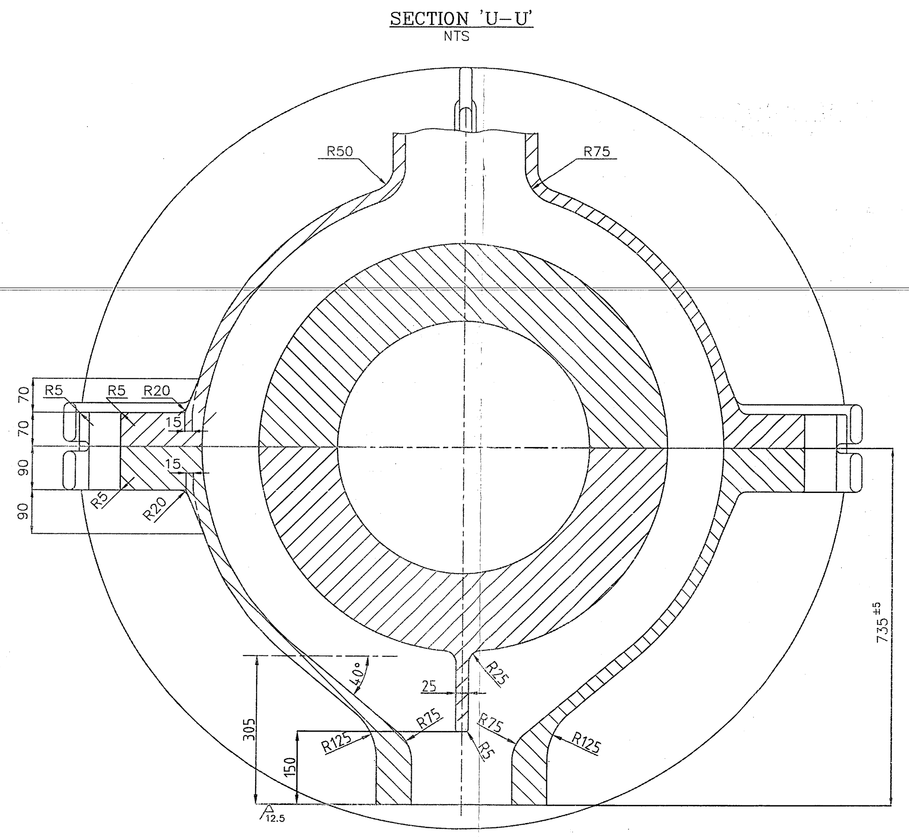

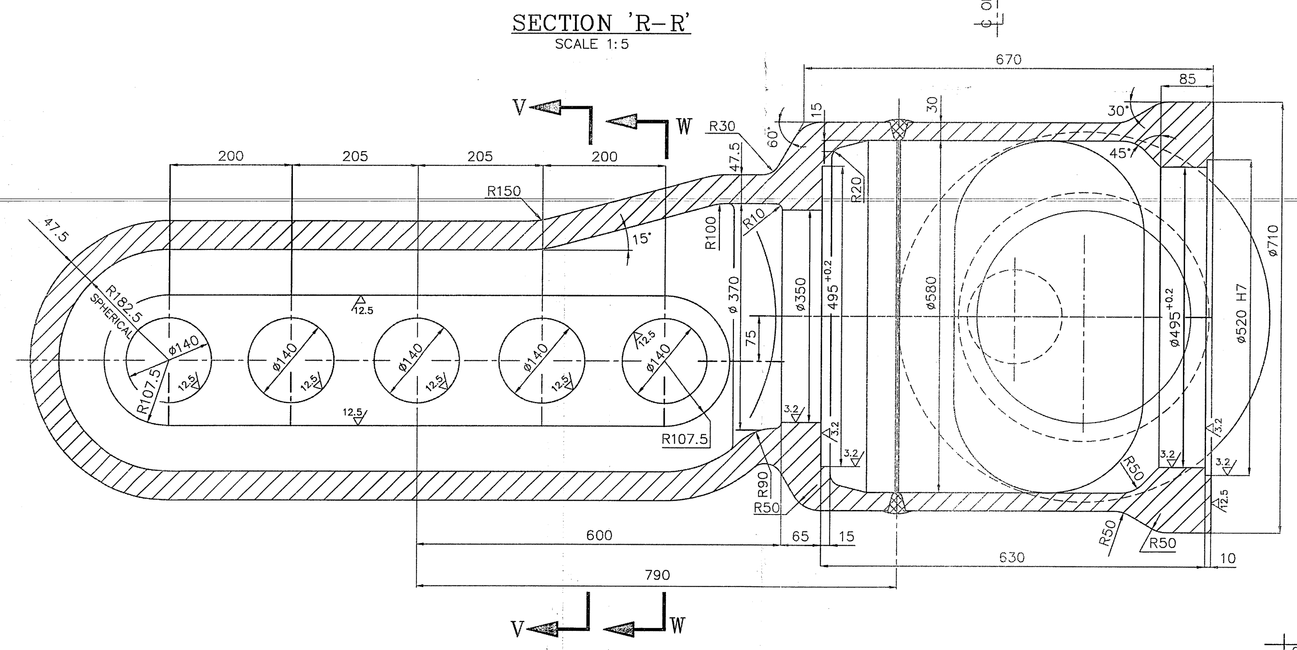

THE INFORMATION ON THIS DOCUMENT IS THE PROPERTY OF BHARAT HEAVY ELECTRICALS LIMITED. IT MUST NOT BE USED DIRECTLY OR INDIRECTLY IN ANY WAY DETRIMENTAL TO THE INTEREST OF THE COMPANY.

GENERAL DIMENSIONAL LIMITS,FITS & TOLERANCES AS PER HY023026I

COMPUTER FILE NAME | REF. DRG. NO. | SIGN. AND DATE | INVENTORY NO

REV.	DATE	ALTERED CHD/APPD	ZONE

TYPE OF PRODUCT OR NAME OF CUSTOMER/PROJECT

BHARAT HEAVY ELECTRICALS LTD.

	NAME	SIGNATURE	DATE	NO.OF VAR.
DRN.				
CHD.				–NA–
APPD.				

DEPT. LTD. DEPT. CODE:415	UNTOL. DIMS. GP.	SCALE 1:5 NTS	WEIGHT (KG) –NA–	REF. TO ASSY. DRG. –NA–	ITEM NO. –NA–	NO.OF ITEMS –NA–

TITLE: OUTER CASING BZ (FOR BFPDT K1401-2)

CARD CODE –NA–

DRAWING NO. 0-301-01-105985 REV. 00

SHT. No 02 NO. OF SHT. 03

00 VAR

13-06-2009 11:42:56

This Drawing is printed from Engineering Digital Archive System (EDAS). Therefore signatures are not essentially required.

FIRST ANGLE PROJECTION

(ALL DIMENSIONS ARE IN mm)

DRG. NO. 0-301-01-105983 SH. 03 OF 03

VIEW ON UPPER PART WITH LOWER PART IN POSITION
NTS

VIEW OF LOWER PART AT PARTING PLANE
NTS

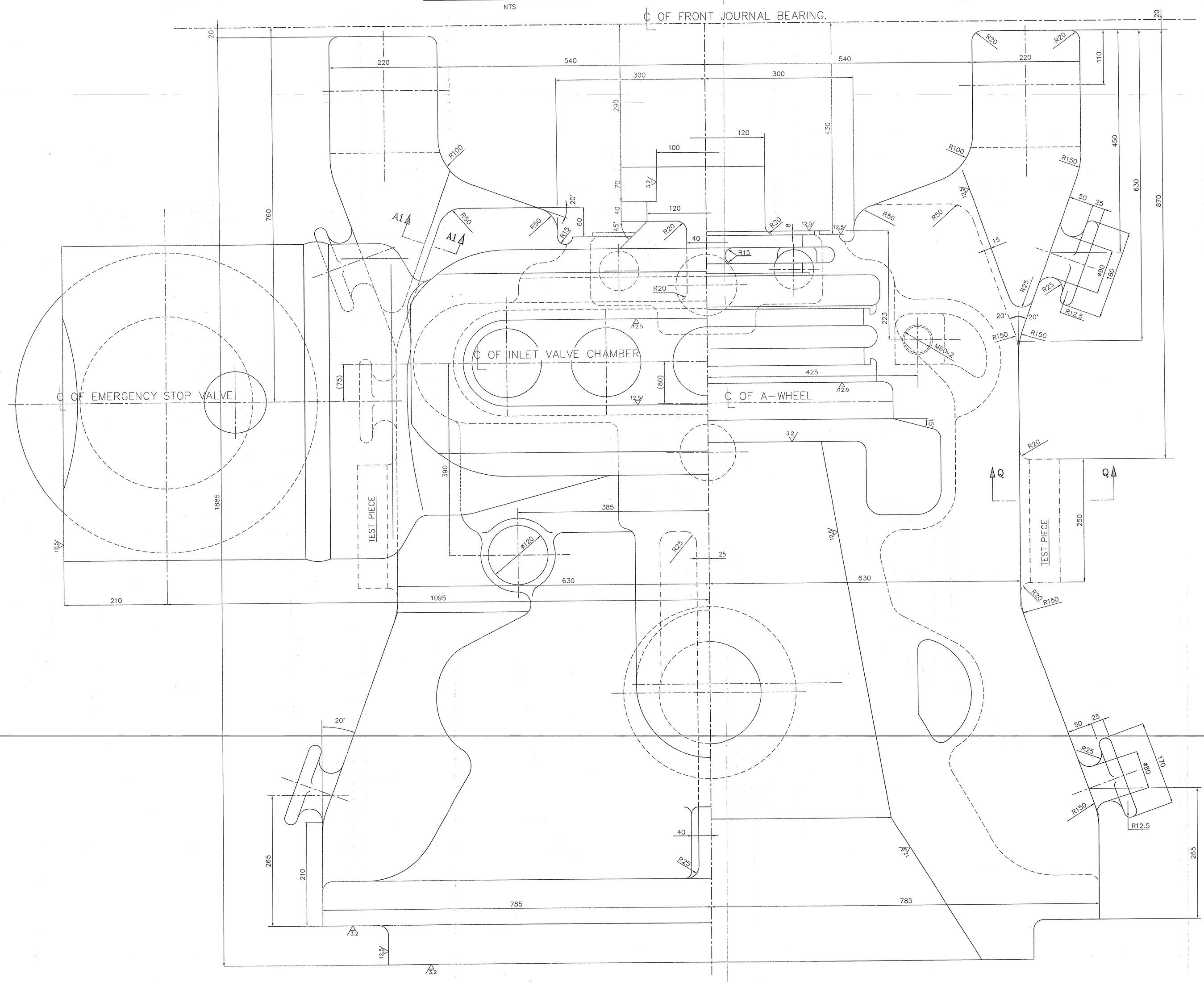

SECTION Q-Q
NTS

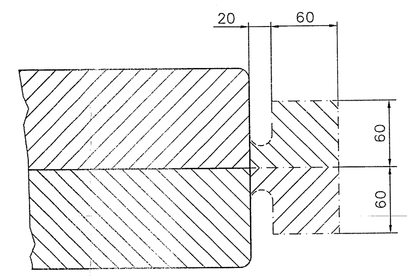

VIEW OF VALVE CHAMBER AT PARTING PLANE
NTS

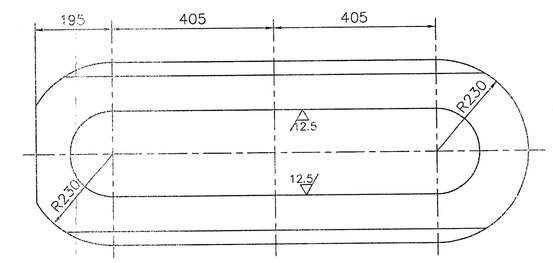

SECTION A1-A1
NTS

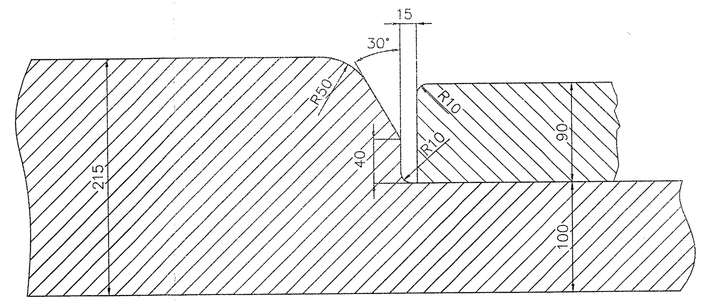

SECTION X-X
NTS

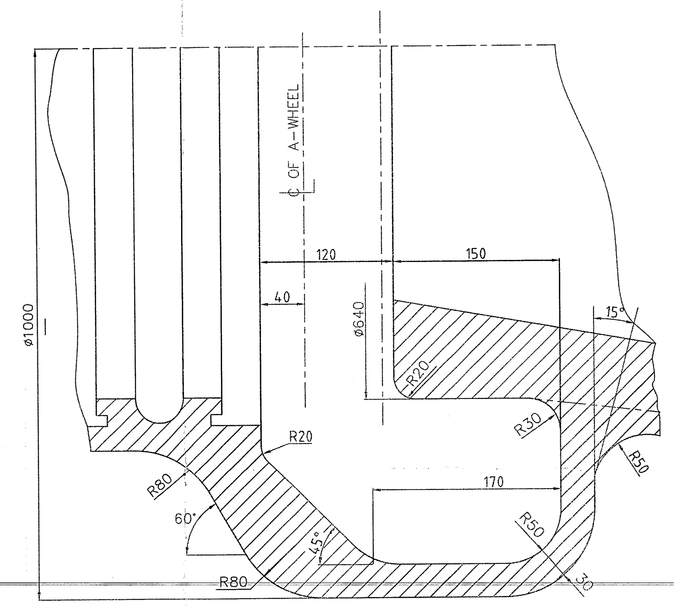

THE INFORMATION ON THIS DOCUMENT IS THE PROPERTY OF BHARAT HEAVY ELECTRICALS LIMITED. IT MUST NOT BE USED DIRECTLY OR INDIRECTLY IN ANY WAY DETRIMENTAL TO THE INTEREST OF THE COMPANY.

GENERAL DIMENSIONAL LIMITS,FITS & TOLERANCES AS PER HY0230261

COMPUTER FILE NAME

SIGN AND DATE | REF. DRG. NO.

INVENTORY NO

REV.	DATE	ALTERED	REV.	DATE	ALTERED	REV.	DATE	ALTERED	REV.	DATE	ALTERED	REV.	DATE	ALTERED	REV.	DATE	ALTERED	REV.	DATE	ALTERED	REV.	DATE	ALTERED	REV.	DATE	ALTERED	REV.	DATE	ALTERED	REV.	DATE	ALTERED
ZONE		CHD/APPD	ZONE		CHD/APPD	ZONE		CHD/APPD	ZONE		CHD/APPD	ZONE		CHD/APPD	ZONE		CHD/APPD	ZONE		CHD/APPD	ZONE		CHD/APPD	ZONE		CHD/APPD	ZONE		CHD/APPD	ZONE		CHD/APPD

TYPE OF PRODUCT OR NAME OF CUSTOMER/PROJECT

BHARAT HEAVY ELECTRICALS LTD. HYDERABAD

	NAME	SIGN	DATE
DRN.			
CHD.			
APPD.			

NO. OF VAR. -NA-

DEPT. & NO. DEPT. CODE 415	UNTOL. DIMS. CR. -NA-		SCALE NTS	WEIGHT (KG) -NA-	REF. TO ASSY. DRG. -NA-	ITEM NO. -NA-	NO. OF ITEMS -NA-

TITLE: OUTER CASING BZ (FOR BFPDT K1401-2)

CARD CODE -NA-

DRAWING NO. 0-301-01-105983 SHT. No 03 NO. OF SHT. 03

REV. 00

This Drawing is printed from Engineering Digital Archive System (EDAS). Therefore signatures are not essentially required.