DRAWING NO. 2-V-N108-08269

ALL DIMENSIONS ARE IN MILLIMETRES. FOR TOLERANCES OF UNTOLERANCED DIMENSIONS DURING MANUFACTURE REFER RELEVANT QCP / QP

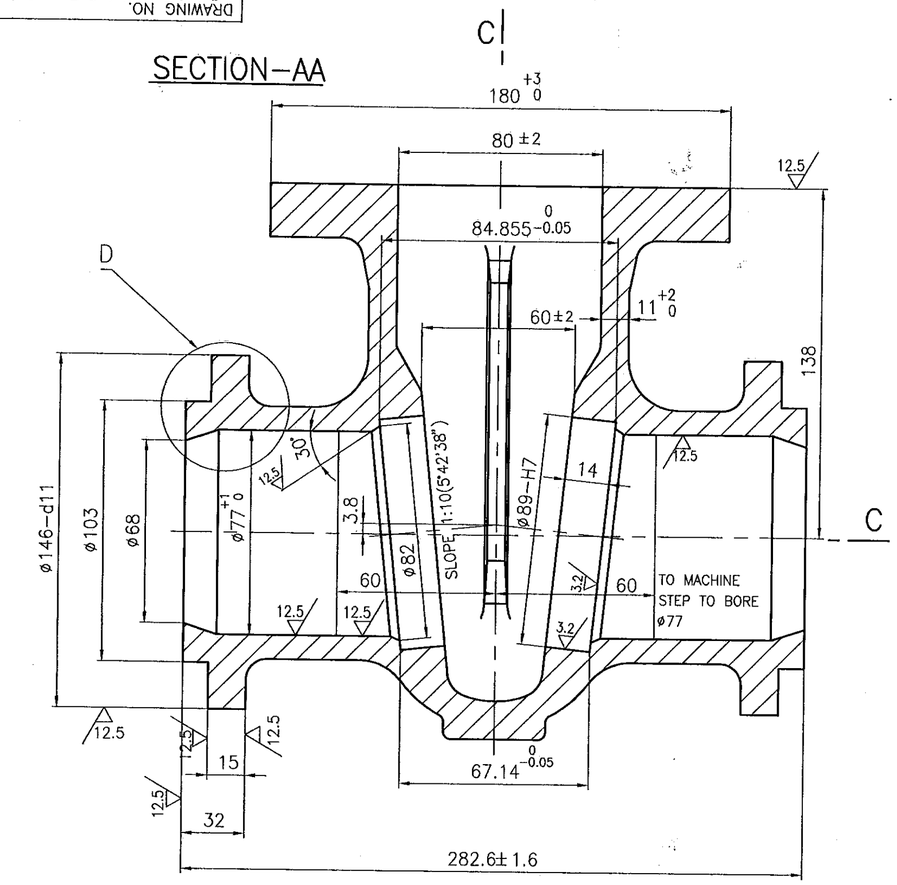

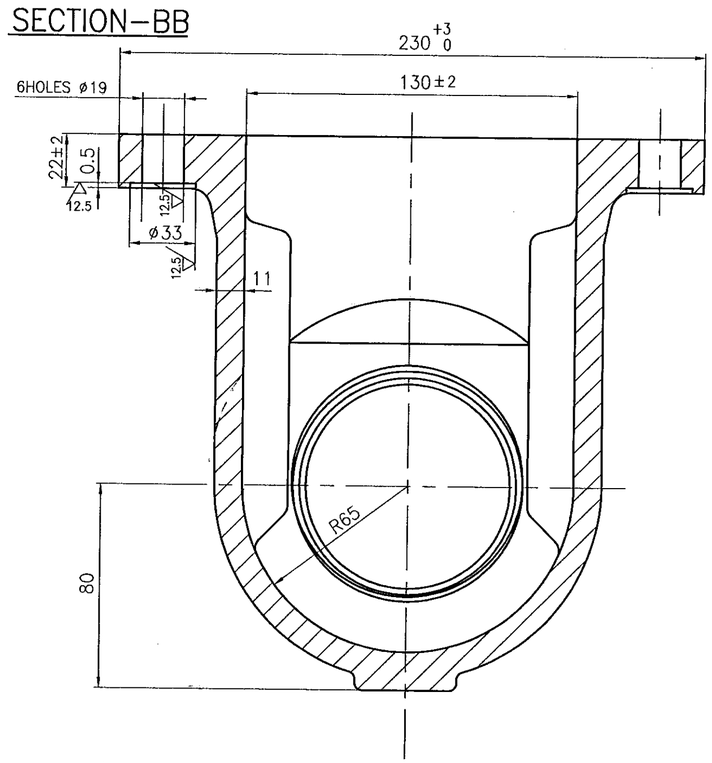

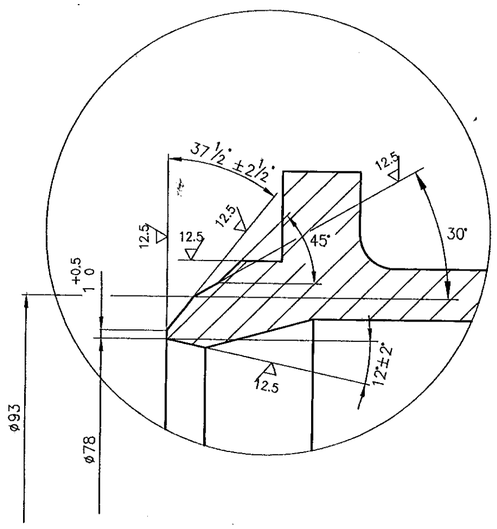

ø89–H7	+0.035 / 0
ø146–d11	−0.145 / −0.395

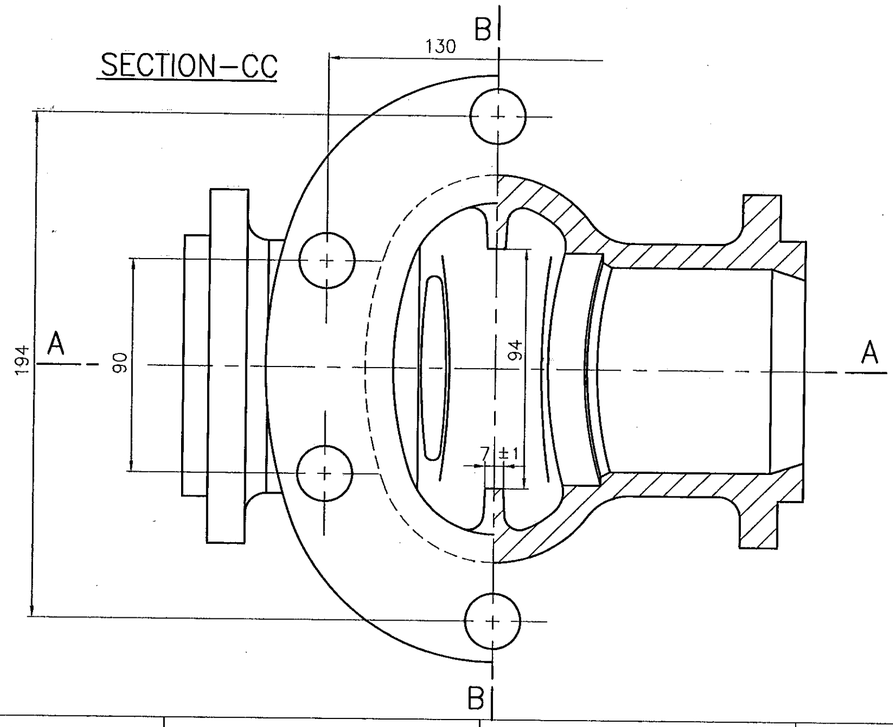

No OFF	DESCRIPTION	MATL CODE	MATL SPECN	HEAT TREATMENT	SCRAP CODE	NET WT (Kg)	GROSS WT (Kg)	DRAWING No	ITEM No
–	CASTING	92 201 210	A351 CF8M ATTEST	SH	46	14.5	18.5	----	01

TYPE OF PRODUCT OR NAME OF CUSTOMER/PROJECT: CS

BHARAT HEAVY ELECTRICALS LTD.
UNIT: HIGH PRESSURE BOILER PLANT.
TIRUCHIRAPALLI -620014.
365–120

	NAME	SIGN	DATE	NO.OF VAR.
DRN	K.P.LEON		23.09.2k	–
CHD	T.R.RAMAMURTHY		23.09.2k	
APPD	K.S.RAMAN		23.09.2k	

DEPT VL
CODE 320
SCALE NTS.
WEIGHT (KG). –
REFERENCE INFORMATIONS CAD:C208269 COMP. CODE: 931100630000
NO. OF ITEMS –

TITLE: BODY (3" C150 BW)
CARD CODE U 01
DRAWING NO. 2-V-N108-08269
REV 00

REV	DATE	ALTERED
ZONE		CHD & APPD

CAUTION: The information on this document is the property of BHARAT HEAVY ELECTRICALS LTD. It must not be used directly or indirectly in any way detrimental to the interest of the company.

Size A2