DRAWING NO. 2-V-0000-07530/02

ALL DIMENSIONS ARE IN MILLIMETRES. FOR TOLERANCES OF UNTOLERANCED DIMENSIONS DURING MANUFACTURE REFER RELEVANT QCP / QP

ø30–ø50 H11	+0.160
	0

SECTION–AA

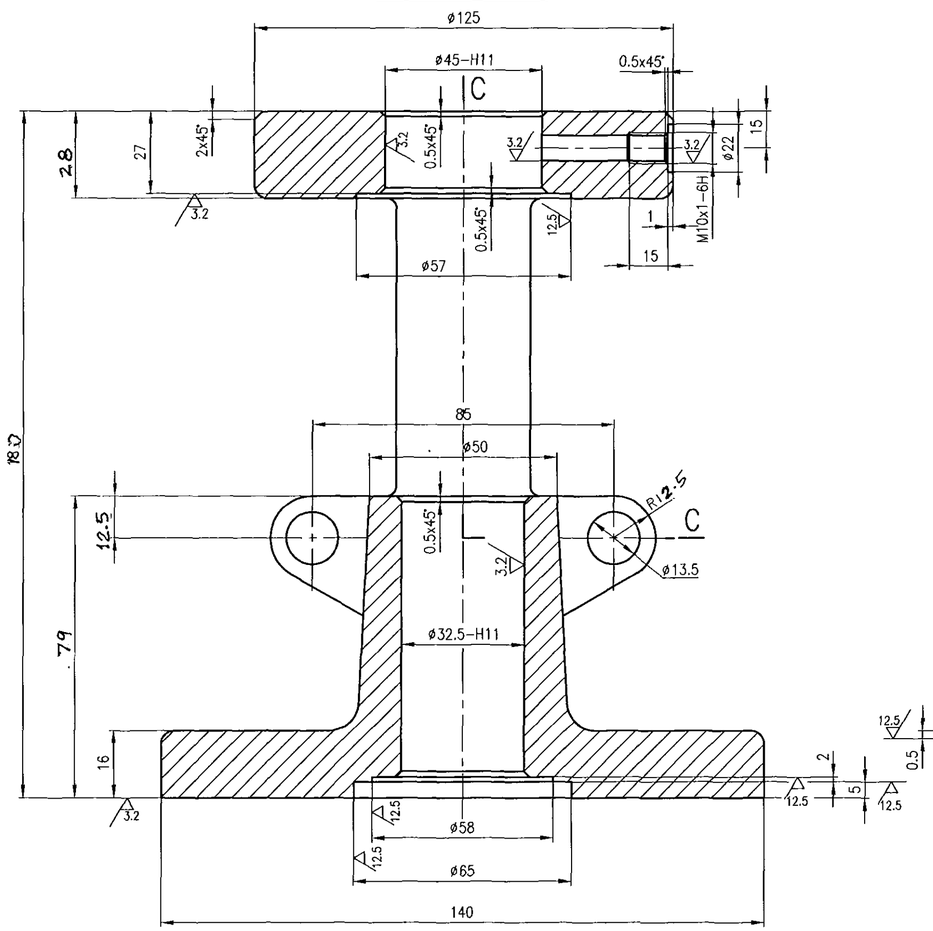

SECTION–BB

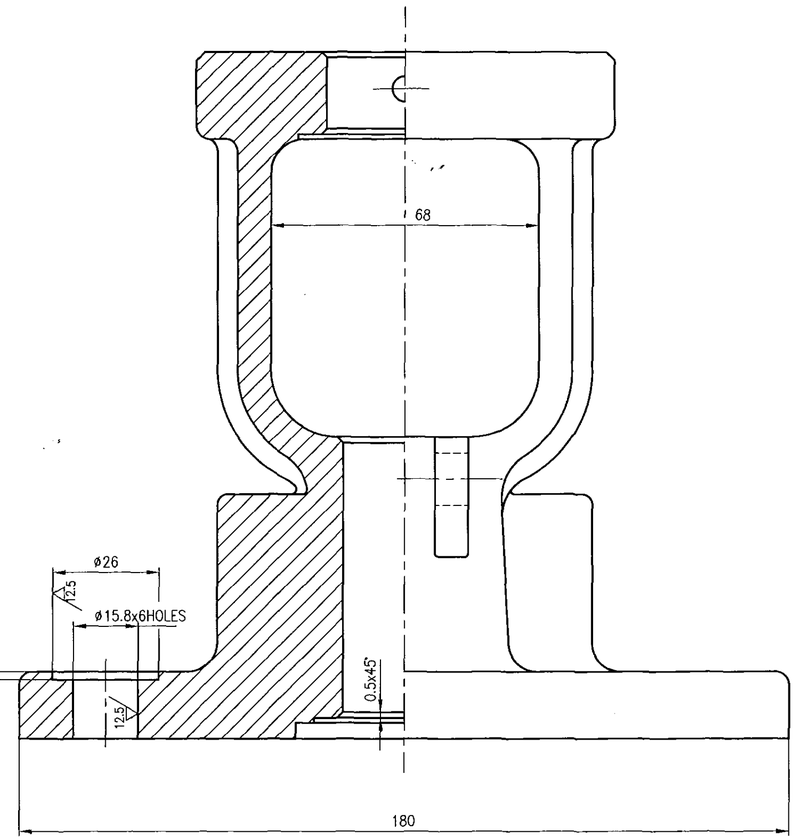

SECTION–CC

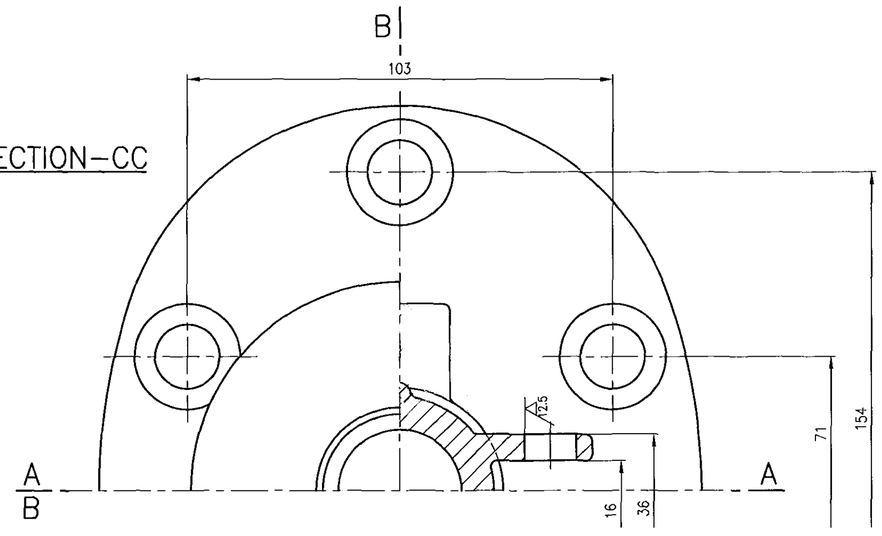

SL No.	DESCRIPTION	MATL CODE	MATL SPECN	HEAT TREATMENT	SCRAP SORT	NET WT (kg)	GROSS WT (kg)	DRAWING No / COMP. CODE	ITEM No
06	---	92 200 581	ASTM A351 CF8M–CERTIFY	SH	46	6.5	8.63	2.V.N472.07530/02 931078010000	06
05	---	92 200 580	ASTM A351 CF8–CERTIFY	SH	46	6.5	8.63	2.V.N277.07530/02 931078000000	06
04	---	92 200 509	ASTM A217 WC9–CERTIFY	N & T	20	6.5	8.63	2.V.N301.07530/02 931077990000	06
03	---	92 200 508	ASTM A217 WC6–CERTIFY	N & T	20	6.5	8.63	2.V.N300.07530/02 931077980000	06
02	---	92 200 507	ASTM A216 WCC–CERTIFY	NORMALISED	10	6.5	8.63	2.V.N299.07530/02 931077970000	06
01	---	92 200 506	ASTM A216 WCB–CERTIFY	NORMALISED	10	6.5	8.63	2.V.N298.07530/02 931077960000	06

REV.	DATE	ALTD:- T.C.L.
02	22.11.97	CHD & APPD:-

DIMNS. 183, 100, 15 & 31 REVISED TO 180, 79, 12.5 & 28 REFER DCN. CS:0795

REV	DATE	ALTERED : N.DHANAPAL
01	24.04.97	CHD & APPD

ZONE

DIMNS. 180, 79, 12.5 & 28 REVISED TO 183, 100, 15 & 31 RESPECTIVELY.

REF : DCN.NO: 0696

CAUTION: The information on this document is the property of BHARAT HEAVY ELECTRICALS LTD. It must not be used directly or indirectly in any way detrimental to the interest of the company.

TYPE OF PRODUCT OR NAME OF CUSTOMER/PROJECT

BHARAT HEAVY ELECTRICALS LTD.
UNIT: HIGH PRESSURE BOILER PLANT.
TIRUCHIRAPALLI -620014.
365–120

	NAME	SIGN	DATE	NO.OF VAR.
DRN	K.P.LEON		15.03.97	
CHD	N.DHANAPAL		24/03/97	
APPD	A.VISWANATHAN		24/3/97	

DEPT	CODE	SCALE	WEIGHT (KG).	REFERENCE INFORMATIONS	NO. OF ITEMS
VL	320	NTS	--	CAD REF: C207530 C206107R	

TITLE	CARD CODE	DRAWING NO.	REV
YOKE COVER (2"–150C GV NSG)	U 01	2–V–0000–07530	02

Size A2