DRAWING NO. 2-V-0000-07524/03

ALL DIMENSIONS ARE IN MILLIMETRES. FOR TOLERANCES OF UNTOLERANCED DIMENSIONS DURING MANUFACTURE REFER RELEVANT QCP / QP

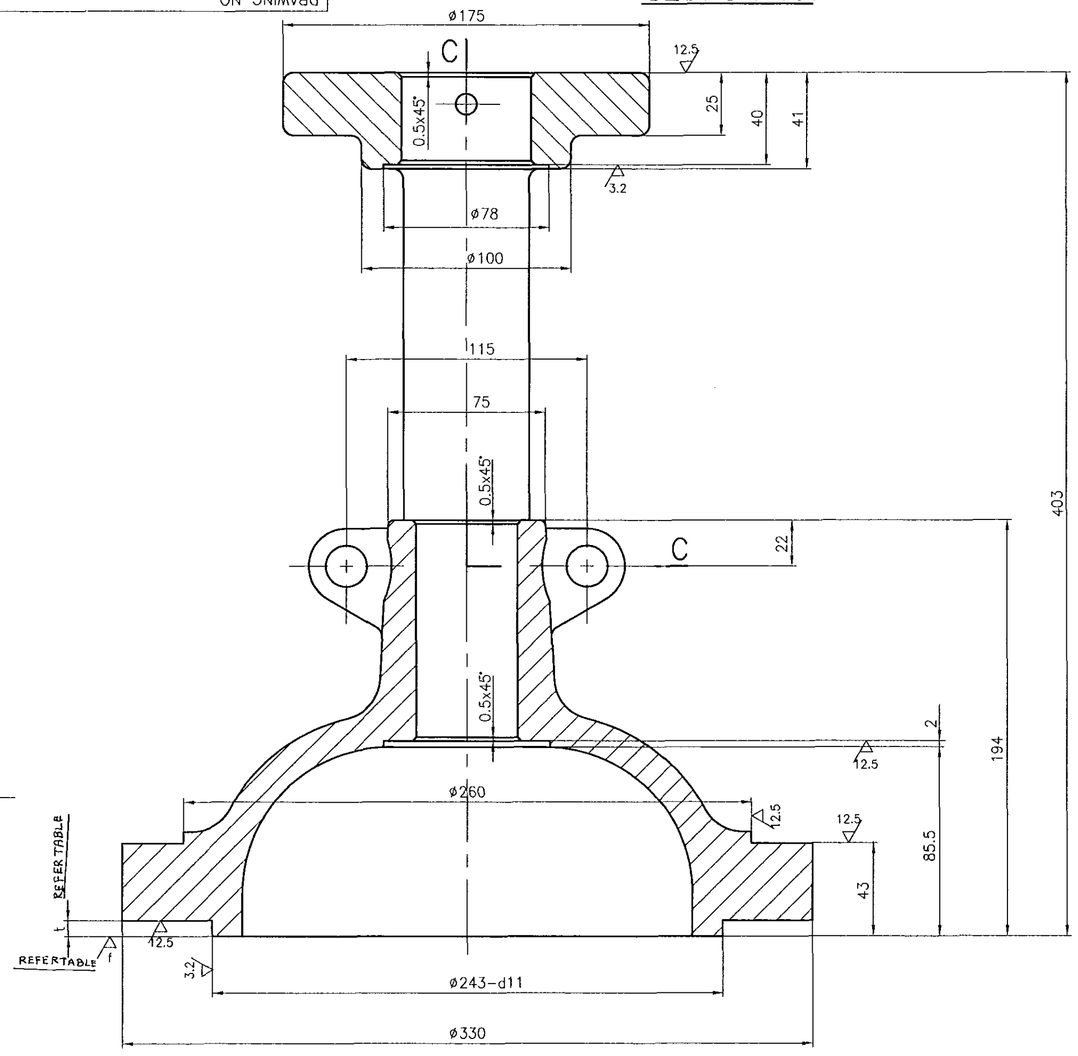

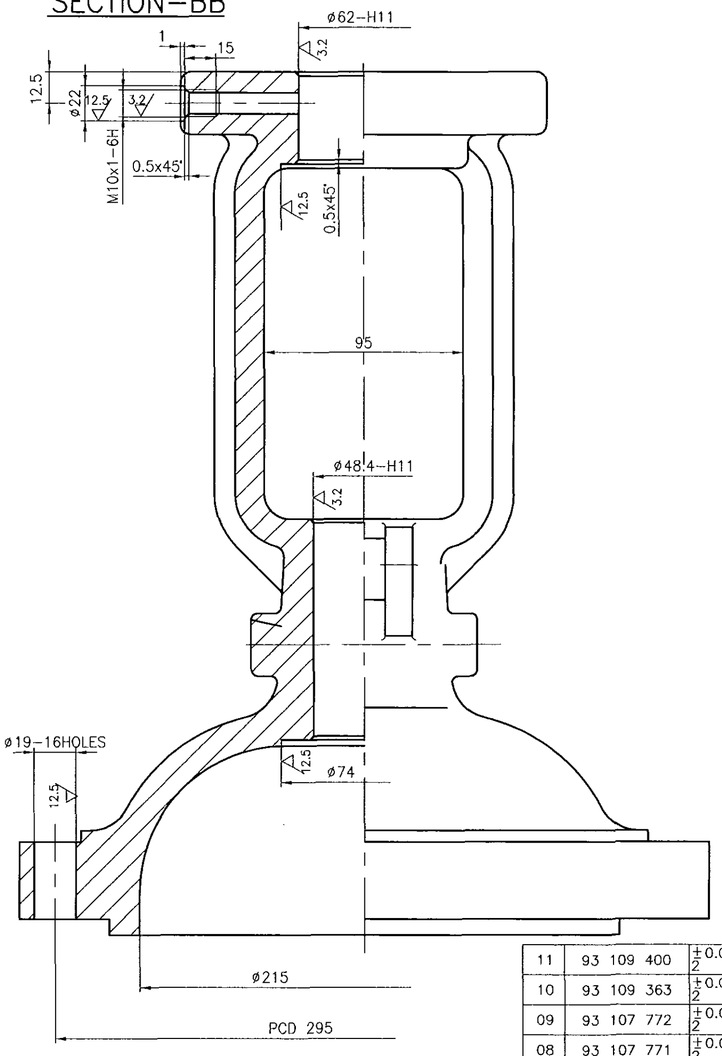

ø62-H11	+0.190 / 0
ø48.4-H11	+0.160 / 0
ø243-d11	-0.170 / -0.460

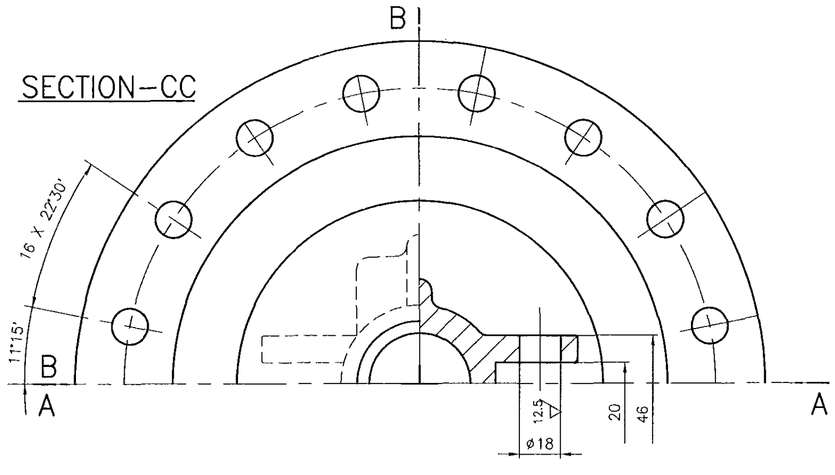

SL No.	COMP CODE	DIMENSIONS t	DIMENSIONS f	MATL SPECN	HEAT TREATMENT	SCRAP SORT	NET WT (kg)	GROSS WT (kg)	DRAWING No	ITEM No
11	93 109 400	±0.05/2	1.6	A216 WCB CERTIFY	NR	10	33.5	40.5	2VK98907524/00	06
10	93 109 363	±0.05/2	1.6	A216 WCC CERTIFY	NR	10	33.5	40.5	2VN80007524/00	06
09	93 107 772	±0.05/2	3.2	A351 CF8M CERTIFY	SH	46	33.5	40.5	2VN33607524/01	06
08	93 107 771	±0.05/2	3.2	A351 CF8 CERTIFY	SH	46	33.5	40.5	2VN33707524/01	06
07	93 107 770	±0.05/2	3.2	A352 LCB CERTIFY	NR	10	33.5	40.5	2VM35807524/01	06
06	93 107 769	±0.05/2	3.2	A217 WC9 CERTIFY	NT	20	33.5	40.5	2VN25007524/01	06
05	93 107 768	±0.05/2	3.2	A217 WC6 CERTIFY	NT	20	33.5	40.5	2VN23307524/01	06
04	93 107 767	±0.05/2	3.2	A216 WCC CERTIFY	NR	10	33.5	40.5	2VK77607524/01	06
03	93 107 766	5	12.5	A216 WCC CERTIFY	NR	10	33.5	40.5	2VN24907524/01	06
02	93 107 765	±0.05/2	3.2	A216 WCB CERTIFY	NR	10	33.5	40.5	2VK77507524/01	06
01	93 107 764	5	12.5	A216 WCB CERTIFY	NR	10	33.5	40.5	2VN24807524/01	06

REV	DATE	ALTERED
03	10.06.99	CHD & APPD

ZONE

SL. NUMBER 11 INCLUDED

CAUTION: The information on this document is the property of BHARAT HEAVY ELECTRICALS LTD. It must not be used directly or indirectly in any way detrimental to the interest of the company.

TYPE OF PRODUCT OR NAME OF CUSTOMER/PROJECT: CS

DRG. RETRACED WITH REV.03 ON 10.06.99 (REF.DCN:CS:0739)

BHARAT HEAVY ELECTRICALS LTD.
UNIT: HIGH PRESSURE BOILER PLANT.
TIRUCHIRAPALLI -620014.

	NAME	SIGN	DATE	NO.OF VAR.
DRN	K.P.LEON		10.06.99	
CHD	N.DHANAPAL		10.06.99	
APPD	R.VASANTH		10.06.99	

DEPT VL

CODE 320

SCALE 1:2

WEIGHT (KG). –

REFERENCE INFORMATIONS: CAD REF: C207524

NO. OF ITEMS

TITLE: YOKE CUM BONNET (6"-300C NSG HW)

CARD CODE: U 01

DRAWING NO. 2-V-0000-07524

REV 03

Size A2