DRAWING NO. 2-V-0000-06120/01

ALL DIMENSIONS ARE IN MILLIMETRES. FOR TOLERANCES OF UNTOLERANCED DIMENSIONS DURING MANUFACTURE REFER RELEVANT QCP / QP

SECTION-AA

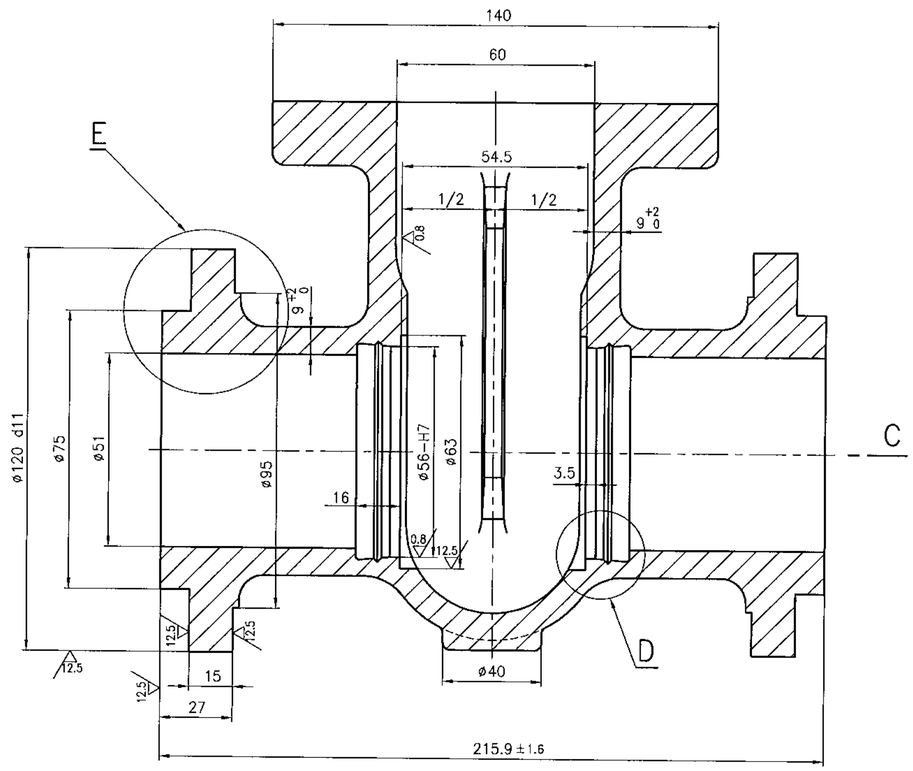

SECTION-BB

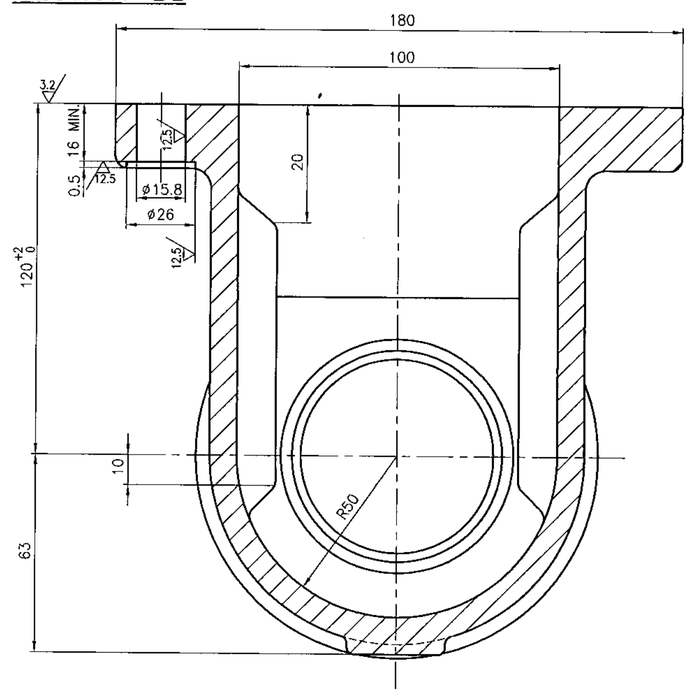

DETAIL-D

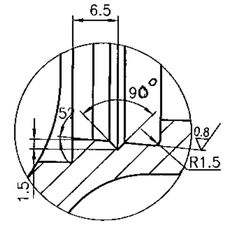

ø56 -H7	+0.030 / 0
ø120 -d11	-0.120 / -0.340

DETAIL-E

FOR STANDARD VALVE ONLY

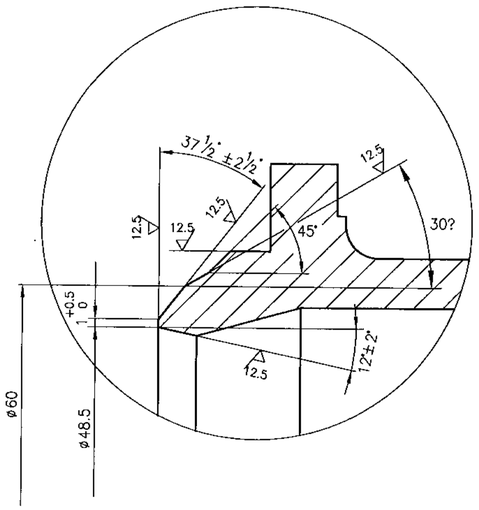

DETAIL-D

WELD DEPOSIT AFTER BODY ASSY. WITH SEAT RING

E7018(ATT.) FOR WCB & WCC

E9018(ATT.) FOR WC6 & WC9

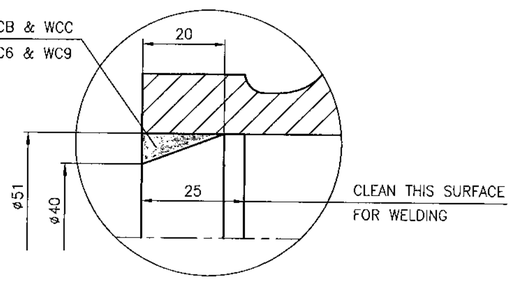

SECTION-CC

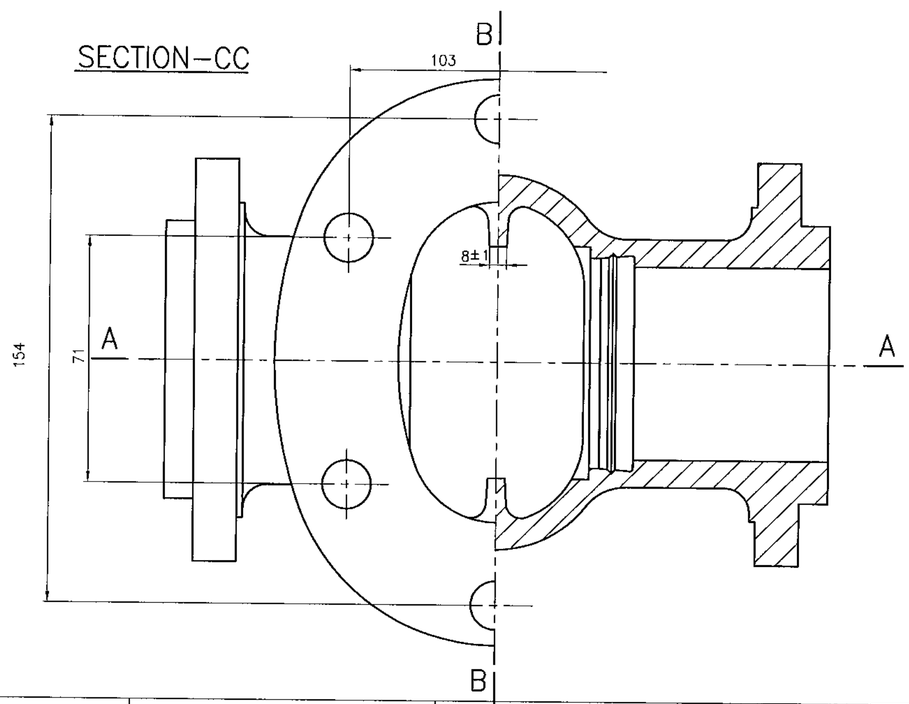

DRG. RETRACED WITH REVION 00 ON 11.07.97

No OFF	DESCRIPTION	MATL CODE	MATL SPECN	HEAT TREATMENT	SCRAP SORT	NET WT (kg)	GROSS WT (kg)	DRAWING	NO. OF ITEMS
04	CASTING DRG No. 2.V.N301.05885R/01	92 200 323	A217 WC9 ATTEST	NT	20	11.0	11.5	2.V.N301.06120/01 931064010000	01
03	CASTING DRG No. 2.V.N300.05885R/01	92 200 322	A217 WC6 ATTEST	NT	20	11.0	11.5	2.V.N300.06120/01 931064000000	01
02	CASTING DRG No. 2.V.N299.05885R/01	92 200 321	A216 WCC ATTEST	NR	10	11.0	11.5	2.V.N299.06120/01 931063990000	01
01	CASTING DRG No. 2.V.N298.05885R/01	92 200 320	A216 WCB ATTEST	NR	10	11.0	11.5	2.V.N298.06120/01 931063980000	01

REV	DATE	ALTERED
01	15.7.97	CHD & APPD

ZONE

TAPER PORTION OF ID IN INLET & OUTLET REMOVED

REFER DCN.CS: 0725

CAUTION: The information on this document is the property of BHARAT HEAVY ELECTRICALS LTD. it must not be used directly or indirectly in any way detrimental to the interest of the company.

TYPE OF PRODUCT OR NAME OF CUSTOMER/PROJECT: CS

BHARAT HEAVY ELECTRICALS LTD.,
UNIT: HIGH PRESSURE BOILER PLANT.
TIRUCHIRAPALLI-620014.
365-120

	NAME	SIGN	DATE	NO. OF VAR.
DRN	K.P.LEON		11.07.97	–
CHD	T.R.R.MURTHY		11.07.97	
APPD	A.VISWANATHAN		11.07.97	

DEPT	SCALE	WEIGHT (KG).	REFERENCE INFORMATIONS	NO. OF ITEMS
V L	NTS.	REF.TABLE	CAD:C206120	–
CODE 320				

TITLE: BODY (2" C150)

CARD CODE: U 01

DRAWING NO.: 2-V-0000-06120

REV: 01

Size A2