DRAWING NO. 2-V-0000-05969/02

ALL DIMENSIONS ARE IN MILLIMETRES. FOR TOLERANCES OF UNTOLERANCED DIMENSIONS DURING MANUFACTURE REFER RELEVANT QCP / QP

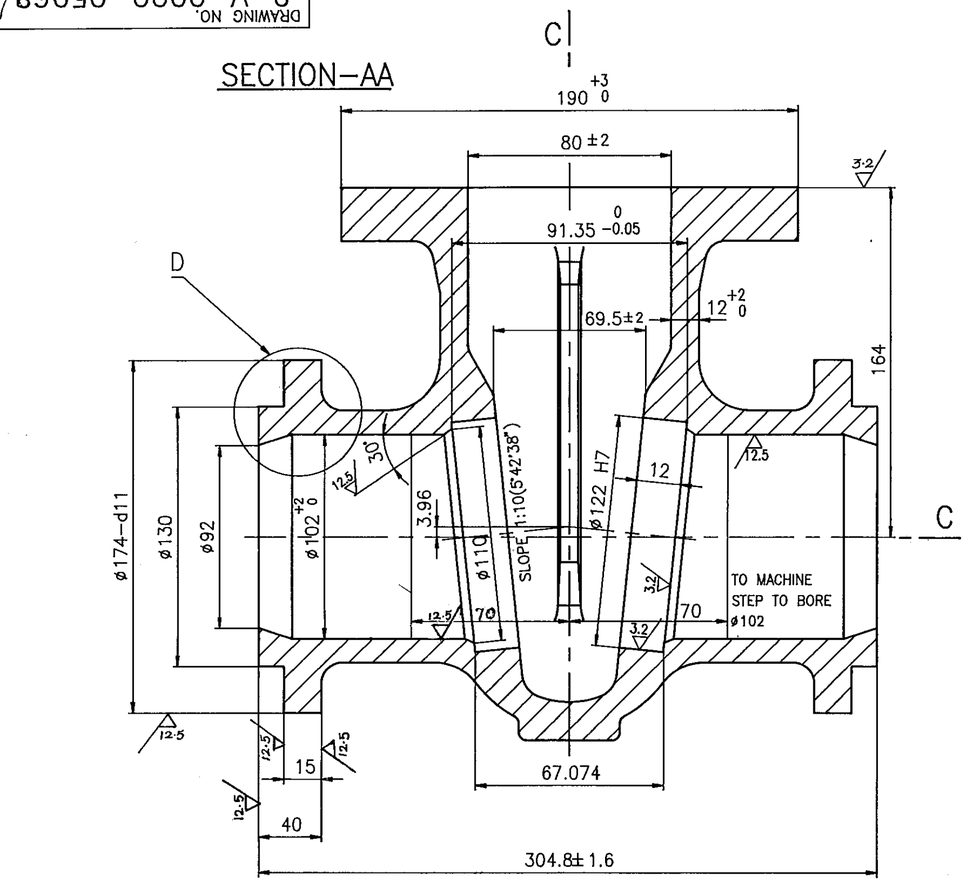

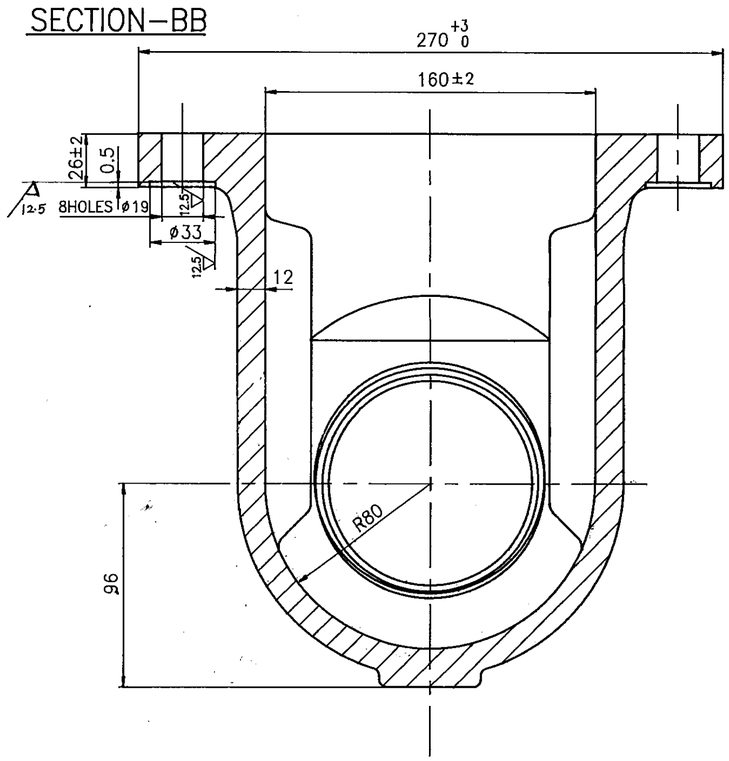

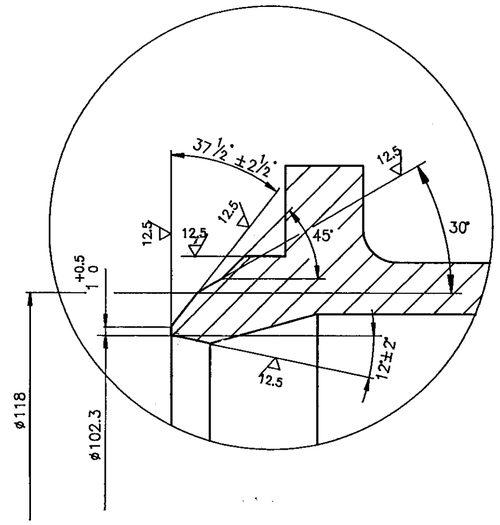

ø122–H7	+0.040 / 0
ø174–d11	−0.145 / −0.395

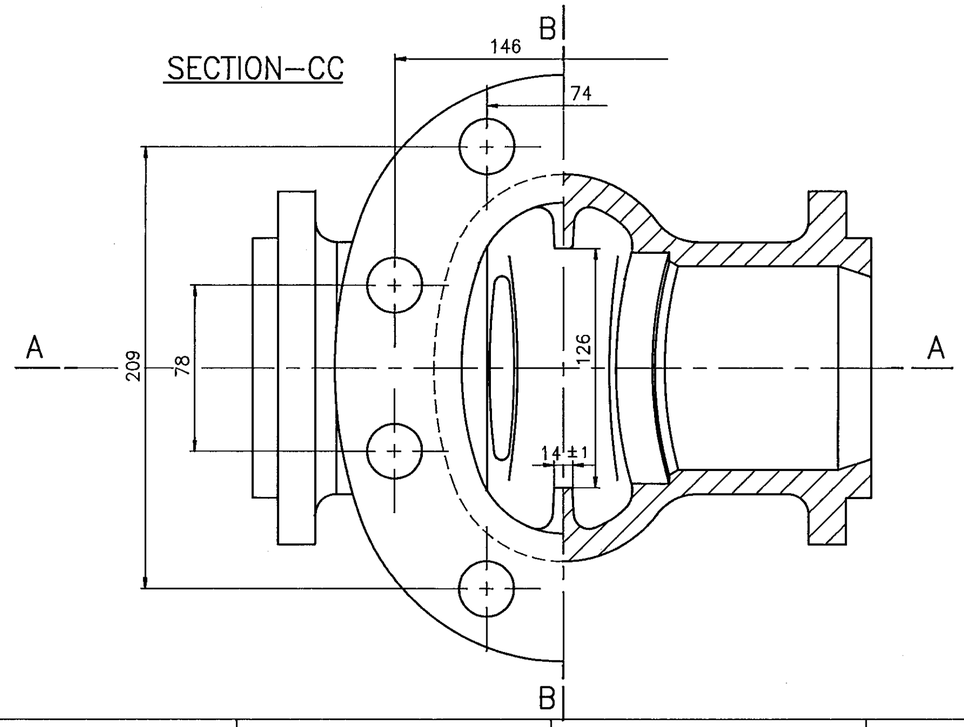

SL. No.	DESCRIPTION	MATL CODE	MATL SPECN	HEAT TREATMENT	SCRAP SORT	NET WT (kg)	GROSS WT (kg)	DRAWING No / COMP.CODE	ITEM No
~~5~~	~~CASTING DRG NO: 2-V-N680-05878R~~	~~92 200 934~~	~~A351CF8 (ATTEST)~~	~~SH~~	~~46~~	~~27~~	~~31~~	~~2-V-N680-05969~~ ~~931083140000~~	~~01~~
4	CASTING DRG.No. 2.V.N297.05878R	92 200 304	A217 WC9 (ATTEST)	N & T	20	27.0	31.0	2.V.N297.05969 / 931060090000	01
3	CASTING DRG.No. 2.V.N296.05878R	92 200 303	A217 WC6 (ATTEST)	N & T	20	27.0	31.0	2.V.N296.05969 / 931060080000	01
2	CASTING DRG.No. 2.V.N295.05878R	92 200 302	A216 WCC (ATTEST)	NORMALISED	10	27.0	31.0	2.V.N295.05969 / 931060070000	01
1	CASTING DRG.No. 2.V.N294.05878R	92 200 301	A216 WCB ATTEST	NORMALISED	10	27.0	31.0	2.V.N294.05969 / 931060060000	01

REV	DATE	ALTD:- T.L.
02	02.12.98	CHD & APPD:-

SL.No. 5 DELETED

REV	DATE	ALTERED: N.DHANAPAL
01	26.09.97	CHD & APPD

SL.No. 5 INCLUDED.

CAUTION: The information on this document is the property of BHARAT HEAVY ELECTRICALS LTD. It must not be used directly or indirectly in any way detrimental to the interest of the company.

TYPE OF PRODUCT
OR NAME OF
CUSTOMER/PROJECT

BHARAT HEAVY ELECTRICALS LTD.
UNIT: HIGH PRESSURE BOILER PLANT.
TIRUCHIRAPALLI -620014.

	NAME	SIGN	DATE	NO.OF VAR.
DRN	T.R.R.MURTHY		21.10.95	–
CHD	N.DHANAPAL		2-01-96	
APPD	A.VISWANATHAN		3.1.96	

DEPT	CODE	SCALE	WEIGHT (KG).	REFERENCE INFORMATIONS	NO. OF ITEMS
VL	320	NTS.	–	CAD:C205969	–

TITLE	CARD CODE	DRAWING NO.	REV
BODY (4" C150 BW)	U 01	2-V-0000-05969	02

Size A2