DRAWING NO. 2-V-0000-05894/01

ALL DIMENSIONS ARE IN MILLIMETRES. FOR TOLERANCES OF UNTOLERANCED DIMENSIONS DURING MANUFACTURE REFER RELEVANT QCP / QP

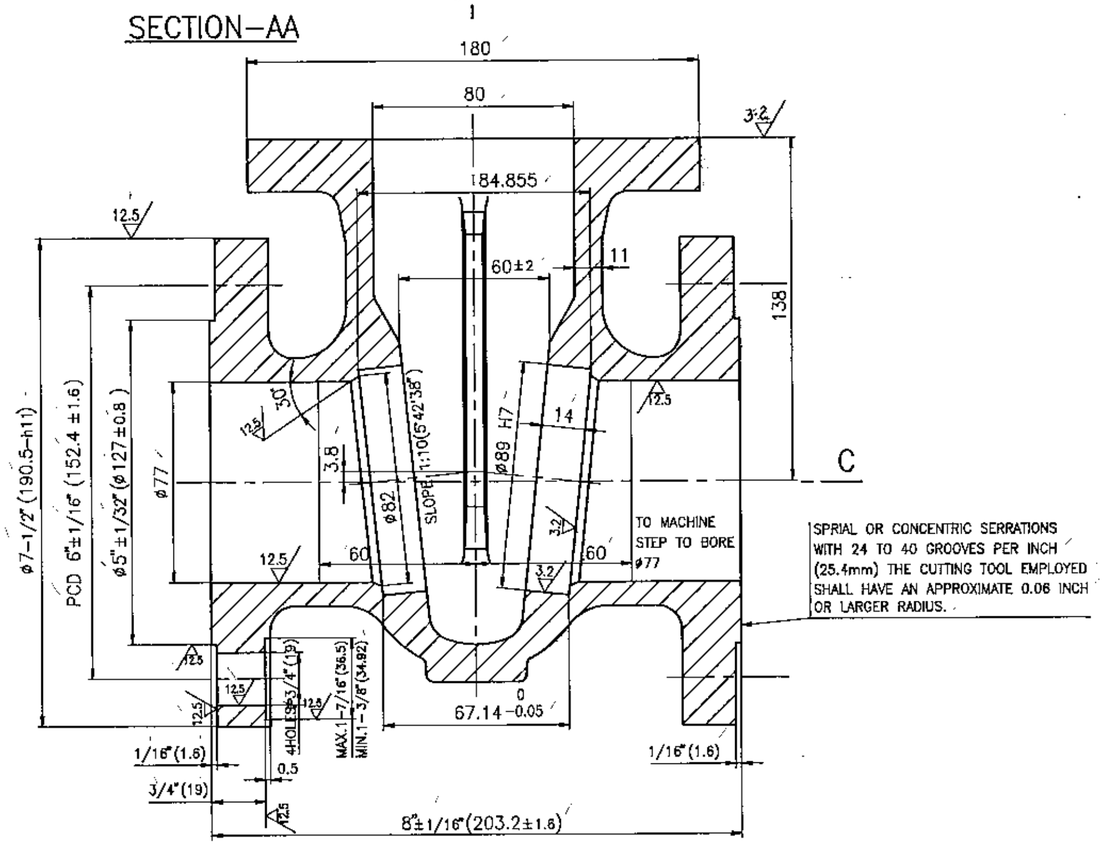

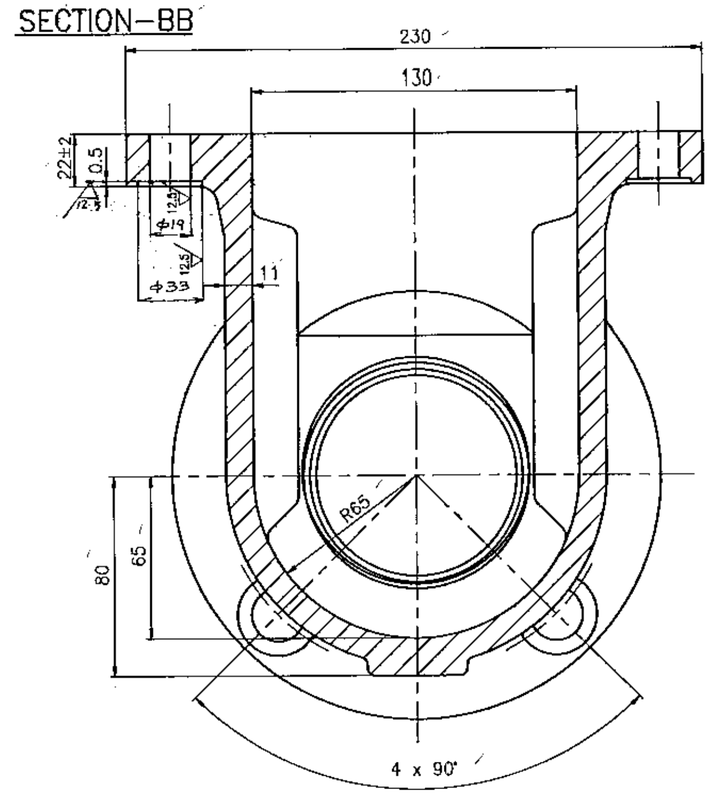

ø190.5 h11	0 / −0.290
ø89 H7	+0.035 / 0

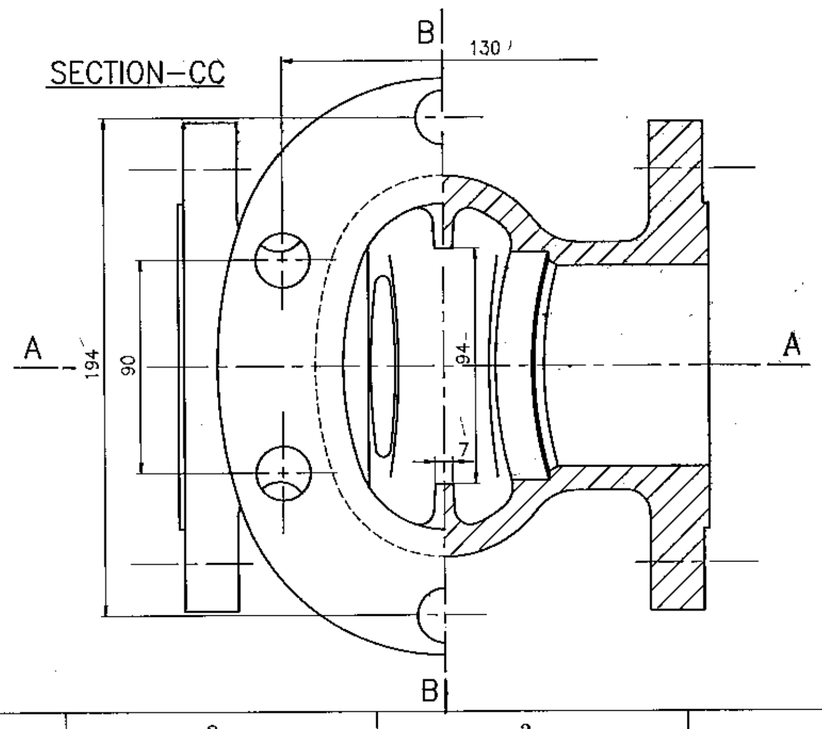

No SL	DESCRIPTION	MATL CODE	MATL SPECN	HEAT TREATMENT	SCRAP SORT	NET WT (kg)	GROSS WT (kg)	DRAWING No	ITEM No
02	2-VM76805872R	92200 886	A352 LCB ATTEST	N.T	10	16.63	21.00	93108191 0000 / 2-VM768-05894	01
01	CASTING DRG No 2VN28605872R	92 200 292	ASTM A351 CF8 ATTEST	SH	40	16.63	21.0	931057260000 / 2-VN286-05894	01

TYPE OF PRODUCT
OR NAME OF
CUSTOMER/PROJECT

BHARAT HEAVY ELECTRICALS LTD.,
UNIT: HIGH PRESSURE BOILER PLANT.
TIRUCHIRAPALLI-620014.

	NAME	SIGN	DATE	NO. OF VAR.
DRN	K.P.LEON		03.07.95	
CHD	N.DHANAPAL		12-07-95	–
APPD	A.VISWANATHAN		12-7-95	

DEPT	SCALE	WEIGHT (KG).	REFERENCE INFORMATIONS	NO. OF PIECES
VL / CODE 320	NTS	16.63	COMP.CODE : 931057260000 CAD:C205894	–

TITLE: BODY (3" C150)

CARD CODE: U 01

DRAWING NO. 2-V-0000-05894 REV 01

Size A2

REV	DATE	ALTERED : N.D.PAL	
01	14-07-97	CHD & APPD	
ZONE	1. SL.NO.2 INCLUDED. 2. DRAWING TABULATED.		

CAUTION: The information on this document is the property of BHARAT HEAVY ELECTRICALS LTD. It must not be used directly or indirectly in any way detrimental to the interest of the company.