BILL OF MATERIAL	DEP NO	NO OF IT	NO OF VAR	TYPE OF PRODUCT	WORKORDER	DRG NO	CORE CODE	REV
		181	1	765 KV 500 MVA MEGA	62007A51201	04987000002	65170259	01
					TITLE: CORE ENDFRAME ASSY. CORE LAYING ARI			SHT NO 1 OF 13

DU	VAR03	VAR02	VAR01	VAR00	REMARKS	IT NO	DESCRIPTION / MAT SIZE	DRAWING NO / DETAILS	IT. / VAR	MATCODE / MAT SPEC	A/C	UT	UNIT WT / QTY	G/S / ZONE
				00004	GTP.612001.2001-01	001	BAND TK WDT LEN ID OD DIM1	34987000077	00			KG	20.380	
				00004	GPT612001.2001-02	002	BAND TK WDT LEN ID OD DIM1	34987000077	01			KG	19.580	
				00001	GPT612001.2001-03	003	BAND TK WDT LEN ID OD DIM1	34987000077	02			KG	20.180	
				00005	GPT612001.2002-01	004	BAND TK WDT LEN ID OD DIM1	34987000078	00			KG	8.780	
				00007	GPT612001.2002-02	005	BAND TK WDT LEN ID OD DIM1	34987000078	01			KG	9.230	
				00002	GPT612001.2003	006	SIDE LOCK PLATE TK WDT LEN ID OD DIM1	24987000016	00			KG	160.400	
				00002	GPT612001.2004	007	SIDE LOCK PLATE TK WDT LEN ID OD DIM1	24987000017	00			KG	150.800	
				00002	GPT612001.2005	008	MAIN LOCK PLATE TK WDT LEN ID OD DIM1	24987000018	00			KG	197.300	
				00001	GPT612001.2006	009	BOTTOM SIDE BAND TK WDT LEN ID OD DIM1	24987000019	00			KG	131.930	
				00001	GPT612001.2007	010	TOP SIDE BAND TK WDT LEN ID OD DIM1	24987000020	00			KG	149.040	
				00006	GPT612001.2008	011	FOOT TK WDT LEN ID OD DIM1	34987000079	00			KG	146.300	
				00024	GPT612001.2010-01 ZPP AS PER TR10017P M30	012	WASHER TK WDT LEN ID OD DIM1	24987000021	00			KG	0.326	

DISTRIBUTION DETAILS					REV NO. 1	PREP BY	CKD BY	APPD BY	DATE 25 NOV 2014
TRE	TRM				PREP BY	CKD BY	APPD BY	DATE	
1	3				KVA	LK	AKP	24 APR 2014	DRG NO 04987000002 SHT 1 OF 13

BILL OF MATERIAL	DEP NO	NO OF IT	NO OF VAR	TYPE OF PRODUCT	WORKORDER	DRG NO	CORE CODE	REV
		181	1	765 KV 500 MVA MEGA	62007A51201	04987000002	65170259	01
					TITLE: CORE ENDFRAME ASSY. CORE LAYING ARI			SHT NO 2 OF 13

DU	VAR03	VAR02	VAR01	VAR00	REMARKS	IT NO	DESCRIPTION / MAT SIZE	DRAWING NO / DETAILS	IT.	MATCODE / MAT SPEC	A/C	UT	UNIT WT / QTY	G/S / ZONE
				00050	GPT612001.2010-02 M36 ZPP AS PER TR10017P	013	WASHER TK WDT LEN ID OD DIM1	24987000021	01			KG	0.343	
				00002	GPT612001.2011 B.O. P'BD	014	INSULATION TK WDT LEN ID OD DIM1	34987000080	00			KG	0.530	
				00004	GPT612001.2012 B.O.P'BD	015	INSULATION TK WDT LEN ID OD DIM1	44987000005	00			KG	0.330	
				00004	GPT612001.2013-01 B.O. P'BD	016	INSULATION TK WDT LEN ID OD DIM1	44987000006	00			KG	0.370	
				00002	GPT612001.2014 B.O. P'BD	017	INSULATION TK WDT LEN ID OD DIM1	34987000081	00			KG	0.680	
				00001	GPT612001.2015 B.O. P'BD	018	BOTTOM YOKE INSULATION TK WDT LEN ID OD DIM1	34987000082	00			KG	8.410	
				00001	GPT612001.2015-01 MIRROR IMAGE B.O. P'BD	019	BOTTOM YOKE INSULATION TK WDT LEN ID OD DIM1	34987000082	01			KG	8.410	
				00001	GPT612001.2016 B.O. P'BD	020	BOTTOM YOKE INSULATION TK WDT LEN ID OD DIM1	34987000083	00			KG	11.700	
				00001	GPT612001.2016-01 MIRROR IMAGE B.O. P'BD	021	BOTTOM YOKE INSULATION TK WDT LEN ID OD DIM1	34987000083	01			KG	11.700	
				00001	GPT612001.2017 B.O. P'BD	022	TOP YOKE INSULATION TK WDT LEN ID OD DIM1	34987000084	00			KG	21.300	
				00001	GPT612001.2017-01 MIRROR IMAGE B.O. P'BD	023	TOP YOKE INSULATION TK WDT LEN ID OD DIM1	34987000084	01			KG	21.300	
				00001	GPT612001.2018. B.O. P'BD	024	TOP YOKE INSULATION TK WDT LEN ID OD DIM1	34987000085	00			KG	28.000	

DISTRIBUTION DETAILS					REV NO. 1	PREP BY	CKD BY	APPD BY	DATE 25 NOV 2014
TRE	TRM				PREP BY	CKD BY	APPD BY	DATE	
1	3				KVA	LK	AKP	24 APR 2014	DRG NO 04987000002 SHT 2 OF 13

BILL OF MATERIAL	DEP NO	NO OF IT	NO OF VAR	TYPE OF PRODUCT	WORKORDER	DRG NO	CORE CODE	REV
		181	1	765 KV 500 MVA MEGA	62007A51201	04987000002	65170259	01
					TITLE: CORE ENDFRAME ASSY. CORE LAYING ARI			SHT NO 3 OF 13

DU	VAR03	VAR02	VAR01	VAR00	REMARKS	IT NO	DESCRIPTION / MAT SIZE	DRAWING NO / DETAILS	IT.	MATCODE / MAT SPEC	A/C	UT	UNIT WT / QTY	G/S / ZONE
				00001	GPT612001.2018-01 MIRROR IMAGE B.O. P'BD	025	TOP YOKE INSULATION TK WDT LEN ID OD DIM1	34987000085	01			KG	18.000	
				00004	GPT612001.2019 B.O. P'BD	026	LOCK PLATE INSULATION TK WDT LEN ID OD DIM1	44987000007	00			KG	6.650	
				00002	GPT612001.2035 B.O. P'BD	027	LOCK PLATE INSULATION TK WDT LEN ID OD DIM1	44987000008	00			KG	9.440	
				00001	GPT.612001.2036 B.O. P'BD	028	SIDE BEAM INSULATION TK WDT LEN ID OD DIM1	34987000086	00			KG	2.910	
				00001	GPT.612001.2037 B.O. P'BD	029	SIDE BEAM INSULATION TK WDT LEN ID OD DIM1	34987000087	00			KG	2.780	
				00001	GPT612001.2040	030	TOP SIDE BEAM TK WDT LEN ID OD DIM1	24987000022				KG	265.500	
				00001	GPT612001.2041	031	BOTTOM SIDE BEAM TK WDT LEN ID OD DIM1	24987000023	00			KG	452.500	
				00001	GPT612001.2050	032	BOTTOM HV YOKE BEAM TK WDT LEN ID OD DIM1	14987000018	00			KG	1082.000	
				00001	GPT.612001.2060	033	BOTTOM LV YOKE BEAM TK WDT LEN ID OD DIM1	14987000019	00			KG	1074.000	
				00001	GPT.612001.2080	034	UPPER HV YOKE BEAM TK WDT LEN ID OD DIM1	14987000020	00			KG	1063.000	
				00001	GPT.612001.2090	035	UPPER LV YOKE BEAM TK WDT LEN ID OD DIM1	14987000021	00			KG	1064.000	
				00001	GPT.612001.2038 B.O. EPOXY	037	SIDE BEAM INSULATION TK WDT LEN ID OD DIM1	44987000009	00			KG	1.370	

DISTRIBUTION DETAILS					REV NO. 1	PREP BY	CKD BY	APPD BY	DATE 25 NOV 2014
TRE	TRM				PREP BY	CKD BY	APPD BY	DATE	
1	3				KVA	LK	AKP	24 APR 2014	DRG NO 04987000002 SHT 3 OF 13

BILL OF MATERIAL	DEP NO	NO OF IT	NO OF VAR	TYPE OF PRODUCT	WORKORDER	DRG NO	CORE CODE	REV
		181	1	765 KV 500 MVA MEGA	62007A51201	04987000002	65170259	01
					TITLE: CORE ENDFRAME ASSY. CORE LAYING ARI			SHT NO 4 OF 13

DU	VAR03	VAR02	VAR01	VAR00	REMARKS	IT NO	DESCRIPTION / MAT SIZE	DRAWING NO / DETAILS	IT.	MATCODE / MAT SPEC	A/C	UT	UNIT WT / QTY	G/S / ZONE
				00001	GPT.612001.2039 B.O. EPOXY	038	SIDE BEAM INSULATION TK WDT LEN ID OD DIM1	44987000010	00			KG	1.330	
				00008	PART.-1 B.O. UDEL	040	STEP BLOCK TK WDT LEN ID OD DIM1	34987000088	001			KG	1.110	
				00002	PART.2-01 B.O.UDEL	041	STEP BLOCK TK WDT LEN ID OD DIM1	34987000089	001			KG	0.980	
				00004	PART.2-02 B.O.UDEL	042	STEP BLOCK TK WDT LEN ID OD DIM1	34987000089	002			KG	2.640	
				00002	PART.2-03 B.O. UDEL	043	STEP BLOCK TK WDT LEN ID OD DIM1	34987000089	003			KG	1.730	
				00002	PART.3-01 B.O. UDEL	044	STEP BLOCK TK WDT LEN ID OD DIM1	34987000090	001			KG	0.830	
				00006	PART.3-02 B.O. UDEL	045	STEP BLOCK TK WDT LEN ID OD DIM1	34987000090	002			KG	2.230	
				00008	PART.4 B.O. UDEL	046	STEP BLOCK TK WDT LEN ID OD DIM1	34987000091	001			KG	2.950	
				00004	PART.5 B.O. UDEL	047	STEP BLOCK TK WDT LEN ID OD DIM1	34987000092	001			KG	9.360	
				00004	PART.6 B.O. UDEL	048	STEP BLOCK TK WDT LEN ID OD DIM1	34987000093	001			KG	9.560	
				00002	PART.7 B.O. UDEL	049	STEP BLOCK TK WDT LEN ID OD DIM1	34987000094	001			KG	5.960	
				00002	PART.8 B.O. UDEL	050	STEP BLOCK TK WDT LEN ID OD DIM1	34987000095	001			KG	5.250	

DISTRIBUTION DETAILS					REV NO. 1	PREP BY	CKD BY	APPD BY	DATE 25 NOV 2014
TRE	TRM				PREP BY	CKD BY	APPD BY	DATE	
1	3				KVA	LK	AKP	24 APR 2014	DRG NO 04987000002 SHT 4 OF 13

BILL OF MATERIAL	DEP NO	NO OF IT	NO OF VAR	TYPE OF PRODUCT	WORKORDER	DRG NO	CORE CODE	REV
		181	1	765 KV 500 MVA MEGA	62007A51201	04987000002	65170259	01
					TITLE: CORE ENDFRAME ASSY. CORE LAYING ARI			SHT NO 5 OF 13

DU	VAR03	VAR02	VAR01	VAR00	REMARKS	IT NO	DESCRIPTION / MAT SIZE	DRAWING NO / DETAILS	IT.	MATCODE / MAT SPEC	A/C	UT	UNIT WT / QTY	G/S / ZONE
				00008	PART.9 B.O. P'BD	051	INSULATION (NOMEX) TK WDT LEN ID OD DIM1	44987000011	001			KG	0.260	
				00004	PART.10-01 B.O. P'BD	052	INSULATION (NOMEX) TK WDT LEN ID OD DIM1	34987000096	001			KG	0.010	
				00004	PART.10-02 B.O. P'BD	053	INSULATION (NOMEX) TK WDT LEN ID OD DIM1	34987000096	002			KG	0.011	
				00004	PART.10-03 B.O. P'BD	054	INSULATION (NOMEX) TK WDT LEN ID OD DIM1	34987000096	003			KG	0.012	
				00004	PART.10-04 B.O. P'BD	055	INSULATION (NOMEX) TK WDT LEN ID OD DIM1	34987000096	004			KG	0.013	
				00024	PART.11-01 B.O. EPOXY	056	TUBE (NOMEX) TK WDT LEN ID OD DIM1	34987000097	001			KG	0.003	
				00026	PART.11-02 B.O. EPOXY	057	TUBE (NOMEX) TK WDT LEN ID OD DIM1	34987000097	002			KG	0.012	
				00024	PART.11-03 B.O. EPOXY	058	TUBE (NOMEX) TK WDT LEN ID OD DIM1	34987000097	003			KG	0.030	
				00006	PART.11-04 B.O. EPOXY	059	TUBE (NOMEX) TK WDT LEN ID OD DIM1	34987000097	004			KG	0.020	
				00008	PART.11-05, B.O. EPOXY	060	TUBE (NOMEX) TK WDT LEN ID OD DIM1	34987000097	005			KG	0.042	
				00020	PART.12-01 B.O. P'BD	062	INSULATION TK WDT LEN ID OD DIM1	34987000098	001			KG	0.240	
				00024	PART.12-02 B.O. P'BD	063	INSULATION TK WDT LEN ID OD DIM1	34987000098	002			KG	0.050	

DISTRIBUTION DETAILS					REV NO. 1	PREP BY	CKD BY	APPD BY	DATE 25 NOV 2014
TRE	TRM				PREP BY	CKD BY	APPD BY	DATE	
1	3				KVA	LK	AKP	24 APR 2014	DRG NO 04987000002 SHT 5 OF 13

BILL OF MATERIAL	DEP NO	NO OF IT	NO OF VAR	TYPE OF PRODUCT	WORKORDER	DRG NO	CORE CODE	REV
		181	1	765 KV 500 MVA MEGA	62007A51201	04987000002	65170259	01
					TITLE: CORE ENDFRAME ASSY. CORE LAYING ARI			SHT NO 6 OF 13

DU	VAR03	VAR02	VAR01	VAR00	REMARKS	IT NO	DESCRIPTION / MAT SIZE	DRAWING NO / DETAILS	IT.	MATCODE / MAT SPEC	A/C	UT	UNIT WT / QTY	G/S / ZONE
				00004	PART.13-01 B.O. P'BD	064	CHANNEL (NOMEX) TK WDT LEN ID OD DIM1	34987000099	001			KG	0.370	
				00001	PART.13-02 B.O. P'BD	065	CHANNEL (NOMEX) TK WDT LEN ID OD DIM1	34987000099	002			KG	0.260	
				00002	PART 13-03 B.O. P'BD	066	CHANNEL (NOMEX) TK WDT LEN ID OD DIM1	34987000099	003			KG	0.560	
				00001	PART 13-04 B.O. P'BD	067	CHANNEL (NOMEX) TK WDT LEN ID OD DIM1	34987000099	004			KG	0.260	
				00003	PART.13-05 B.O. P'BD	068	CHANNEL (NOMEX) TK WDT LEN ID OD DIM1	34987000099	005			KG	0.590	
				00004	PART.13-06 B.O. P'BD	069	CHANNEL (NOMEX) TK WDT LEN ID OD DIM1	34987000099	006			KG	0.480	
				00001	PART.13-07 B.O. P'BD	070	CHANNEL (NOMEX) TK WDT LEN ID OD DIM1	34987000099	007			KG	0.390	
				00001	PART.13-08 B.O. P'BD	071	CHANNEL (NOMEX) TK WDT LEN ID OD DIM1	34987000099	008			KG	1.320	
				00001	PART.13-09 B.O. P'BD	072	CHANNEL (NOMEX) TK WDT LEN ID OD DIM1	34987000099	009			KG	1.130	
				00006	PART.14-01 B.O. P'BD	073	CHANNEL (NOMEX) TK WDT LEN ID OD DIM1	34987000100	001			KG	1.900	
				00006	PART.15 B.O. P'BD	074	INSULATION (PBD) TK WDT LEN ID OD DIM1	34987000101	001			KG	0.060	
				00012	PART.16-01 B.O. P'BD	075	INSULATION (PBD) TK WDT LEN ID OD DIM1	34987000102	001			KG	0.032	

DISTRIBUTION DETAILS					REV NO. 1	PREP BY	CKD BY	APPD BY	DATE 25 NOV 2014
TRE	TRM				PREP BY	CKD BY	APPD BY	DATE	
1	3				KVA	LK	AKP	24 APR 2014	DRG NO 04987000002 SHT 6 OF 13

BILL OF MATERIAL	DEP NO	NO OF IT	NO OF VAR	TYPE OF PRODUCT	WORKORDER	DRG NO	CORE CODE	REV
		181	1	765 KV 500 MVA MEGA	62007A51201	04987000002	65170259	01
					TITLE: CORE ENDFRAME ASSY. CORE LAYING ARI			SHT NO 7 OF 13

DU	VAR03	VAR02	VAR01	VAR00	REMARKS	IT NO	DESCRIPTION / MAT SIZE	DRAWING NO / DETAILS	IT.	MATCODE / MAT SPEC	A/C	UT	UNIT WT / QTY	G/S / ZONE
				00004	PART.16-02 B.O. P'BD	076	INSULATION (PBD) TK WDT LEN ID OD DIM1	34987000102	002			KG	0.280	
				00004	PART.16-03 B.O. P'BD	077	INSULATION (PBD) TK WDT LEN ID OD DIM1	34987000102	003			KG	0.430	
				00002	PART.16-04 B.O. P'BD	078	INSULATION (PBD) TK WDT LEN ID OD DIM1	34987000102	004			KG	0.560	
				00004	PART.16-05 B.O. P'BD	079	INSULATION (PBD) TK WDT LEN ID OD DIM1	34987000102	001			KG	0.510	
				00004	PART.16-06 B.O. P'BD	080	INSULATION (PBD) TK WDT LEN ID OD DIM1	34987000102	002			KG	0.580	
				00010	PART.17-01 B.O. P'BD	081	INSULATION (PBD) TK WDT LEN ID OD DIM1	34987000103	001			KG	0.460	
				00024	PART.18 B.O. P'BD	082	INSULATION (NOMEX) TK WDT LEN ID OD DIM1	34987000104	001			KG	0.260	
				00048	PART 21-01 B.O. EPOXY	086	FIBER GLASS TUBE TK WDT LEN ID OD DIM1	34987000105	001			KG	0.006	
				00124	PART 21-02 B.O. EPOXY	087	FIBER GLASS TUBE TK WDT LEN ID OD DIM1	34987000105	002			KG	0.008	
				00012	PART 21-03 B.O. EPOXY	088	FIBER GLASS TUBE TK WDT LEN ID OD DIM1	34987000105	003			KG	0.005	
				00003	PART 22 B.O. EPOXY	089	INSULATION (NOMEX) TK WDT LEN ID OD DIM1	34987000106	001			KG	0.740	
				00006	PART 23 B.O. EPOXY	090	INSULATION TK WDT LEN ID OD DIM1	34987000107	001			KG	1.210	

DISTRIBUTION DETAILS					REV NO. 1	PREP BY	CKD BY	APPD BY	DATE 25 NOV 2014
TRE	TRM				PREP BY	CKD BY	APPD BY	DATE	
1	3				KVA	LK	AKP	24 APR 2014	DRG NO 04987000002 SHT 7 OF 13

BILL OF MATERIAL	DEP NO	NO OF IT	NO OF VAR	TYPE OF PRODUCT	WORKORDER	DRG NO	CORE CODE	REV
		181	1	765 KV 500 MVA MEGA	62007A51201	04987000002	65170259	01
					TITLE: CORE ENDFRAME ASSY. CORE LAYING ARI			SHT NO 8 OF 13

DU	VAR03	VAR02	VAR01	VAR00	REMARKS	IT NO	DESCRIPTION / MAT SIZE	DRAWING NO / DETAILS	IT.	MATCODE / MAT SPEC	A/C	UT	UNIT WT / QTY	G/S / ZONE
				00026	PART.24-01 PC 8 IS:1367 PT.6	091	SPECIAL NUT TK WDT LEN ID OD DIM1	34987000108	001			KG	0.870	
				00024	PART.24-02 PC 8 IS:1367 PT.6	092	SPECIAL NUT TK WDT LEN ID OD DIM1	34987000108	002			KG	0.350	
				00004	PART.25	093	WEDGE TK WDT LEN ID OD DIM1	34987000109	001			KG	2.900	
				00002	PART.26	094	SEGMENT TK WDT LEN ID OD DIM1	34987000110	001			KG	3.350	
				00004	PART.27	095	BAR TK WDT LEN ID OD DIM1	34987000111	001			KG	0.750	
				00004	PART.28-01	096	LOCK PLATE TK WDT LEN ID OD DIM1	34987000112	001			KG	0.010	
				00008	PART.28-02	097	LOCK PLATE TK WDT LEN ID OD DIM1	34987000112	002			KG	0.009	
				00006	PART.29	098	WASHER TK WDT LEN ID OD DIM1	34987000113	001			KG	0.096	
				00006	PART.30 ZPP AS PER TR10017P PC 8.8 AS PER IS:1367 PT. 3	099	SCREW TK WDT LEN ID OD DIM1	34987000114	001			KG	2.100	
				00006	PART.31	100	DISK TK WDT LEN ID OD DIM1	34987000115	001			KG	1.340	
				00006	PART.32	101	LOCK PLATE TK WDT LEN ID OD DIM1	34987000116	001			KG	0.016	
				00002	PART.33-01	102	LOCK PLATE TK WDT LEN ID OD DIM1	34987000117	001			KG	0.210	

DISTRIBUTION DETAILS					REV NO. 1	PREP BY	CKD BY	APPD BY	DATE 25 NOV 2014
TRE	TRM				PREP BY	CKD BY	APPD BY	DATE	
1	3				KVA	LK	AKP	24 APR 2014	DRG NO 04987000002 SHT 8 OF 13

BILL OF MATERIAL	DEP NO	NO OF IT	NO OF VAR	TYPE OF PRODUCT	WORKORDER	DRG NO	CORE CODE	REV
		181	1	765 KV 500 MVA MEGA	62007A51201	04987000002	65170259	01
					TITLE: CORE ENDFRAME ASSY. CORE LAYING ARI			SHT NO 9 OF 13

DU	VAR03	VAR02	VAR01	VAR00	REMARKS	IT NO	DESCRIPTION / MAT SIZE	TK	WDT	LEN	ID	OD	DIM1	DRAWING NO / DETAILS	IT.	MATCODE / MAT SPEC	A/C	UT	UNIT WT / QTY	G/S / ZONE
				00002	PART.33-02	103	LOCK PLATE							34987000117	002			KG	0.240	
				00026	PART.34-01 PC 8.8 AS PER IS:1367 PT.3	104	STUD BOLT							34987000118	001			KG	1.600	
				00024	PART.34-02 PC 8.8 AS PER IS:1367 PT.3	105	STUD BOLT							34987000118	002			KG	0.940	
				00050	PART.35-01 PC 8 AS PER IS:1367 PT.6 ZPP AS PER TR10017P	106	SPECIAL NUT							34987000119	001			KG	0.877	
				00024	PART.35-02 PC 8 AS PER IS:1367 PT.6 ZPP AS PER TR10017P	107	SPECIAL NUT							34987000119	002			KG	0.577	
				00001	PART.36	108	PLATE							34987000120	001			KG	21.700	
				00004	PART.37-01 B.O. EPOXY	109	PLATE (NOMEX)							34987000121	001			KG	0.320	
				00004	PART.37-02 B.O. EPOXY	110	PLATE (NOMEX)							34987000121	002			KG	0.280	
				00024	PART-39	111	PLATE							44987000030	001	AA1011713110 AA10103		KG	0.450	
				00012	B.O. EPOXY	112	INSULATION (NOMEX)	3	28	240						AA22489		KG	0.020	
				00006	B.O. EPOXY	113	INSULATION (NOMEX)	2	30	360						AA22489		KG	0.026	
				00002	B.O. EPOXY	114	INSULATION (NOMEX)	1	30	360						AA22489		KG	0.013	

DISTRIBUTION DETAILS					REV NO. 1	PREP BY	CKD BY	APPD BY	DATE 25 NOV 2014
TRE	TRM				PREP BY	CKD BY	APPD BY	DATE	
1	3				KVA	LK	AKP	24 APR 2014	DRG NO 04987000002 SHT 9 OF 13

BILL OF MATERIAL	DEP NO	NO OF IT	NO OF VAR	TYPE OF PRODUCT	WORKORDER	DRG NO	CORE CODE	REV
		181	1	765 KV 500 MVA MEGA	62007A51201	04987000002	65170259	01
					TITLE: CORE ENDFRAME ASSY. CORE LAYING ARI			SHT NO 10 OF 13

DU	VAR03	VAR02	VAR01	VAR00	REMARKS	IT NO	DESCRIPTION / MAT SIZE	DRAWING NO / DETAILS	IT.	MATCODE / MAT SPEC	A/C	UT	UNIT WT / QTY	G/S / ZONE
				00004	GPT.612001.2020-01 B.O. EPOXY	117	BAND INSULATION TK WDT LEN ID OD DIM1	44987000012	00			KG	0.490	
				00001	GPT.612001.2020-02 B.O. EPOXY	118	BAND INSULATION TK WDT LEN ID OD DIM1	44987000012	01			KG	0.440	
				00004	GPT.612001.2020-03 B.O. EPOXY	119	BAND INSULATION TK WDT LEN ID OD DIM1	44987000012	02			KG	0.540	
				00001	GPT.612001.2021-01 B.O. EPOXY	120	BAND INSULATION TK WDT LEN ID OD DIM1	44987000013	00			KG	0.170	
				00001	GPT.612001.2021-02 B.O. EPOXY	121	BAND INSULATION TK WDT LEN ID OD DIM1	44987000013	01			KG	0.180	
				00002	GPT.612001.2022-01 B.O. EPOXY	122	BAND INSULATION TK WDT LEN ID OD DIM1	44987000014	00			KG	0.460	
				00003	GPT.612001.2022-02 B.O. EPOXY	123	BAND INSULATION TK WDT LEN ID OD DIM1	44987000014	01			KG	0.490	
				00001	GPT.612001.2023 B.O. EPOXY	124	BAND INSULATION TK WDT LEN ID OD DIM1	44987000015	00			KG	1.310	
				00001	GPT.612001.2024 B.O. EPOXY	125	BAND INSULATION TK WDT LEN ID OD DIM1	44987000016	00			KG	1.050	
				00004	GPT.612001.2025-01 B.O. EPOXY	126	FOOT INSULATION TK WDT LEN ID OD DIM1	44987000017	00			KG	1.920	
				00004	GPT.612001.2026 B.O. EPOXY	127	INSULATION TK WDT LEN ID OD DIM1	44987000018	00			KG	0.220	
				00002	GPT.612001.2027 B.O. EPOXY	128	INSULATION TK WDT LEN ID OD DIM1	44987000019	00			KG	0.310	

DISTRIBUTION DETAILS					REV NO. 1	PREP BY	CKD BY	APPD BY	DATE 25 NOV 2014
TRE	TRM				PREP BY	CKD BY	APPD BY	DATE	
1	3				KVA	LK	AKP	24 APR 2014	DRG NO 04987000002 SHT 10 OF 13

BILL OF MATERIAL	DEP NO	NO OF IT	NO OF VAR	TYPE OF PRODUCT	WORKORDER	DRG NO	CORE CODE	REV
		181	1	765 KV 500 MVA MEGA	62007A51201	04987000002	65170259	01
					TITLE: CORE ENDFRAME ASSY. CORE LAYING ARI			SHT NO 11 OF 13

DU	VAR03	VAR02	VAR01	VAR00	REMARKS	IT NO	DESCRIPTION / MAT SIZE	DRAWING NO / DETAILS	IT.	MATCODE / MAT SPEC	A/C	UT	UNIT WT / QTY	G/S / ZONE
				00002	GPT.612001.2028 B.O. EPOXY	129	SIDE BEAM INSULATION TK WDT LEN ID OD DIM1	44987000020	00			KG	0.930	
				00002	GPT.612001.2029 B.O. EPOXY	130	SIDE BEAM INSULATION TK WDT LEN ID OD DIM1	44987000021	00			KG	0.880	
				00010	ZPP ,COARSE PITCH PC 8.8 IS:1367 PT.-1	131	HEX BOLT M10 X 15 TK WDT LEN ID OD DIM1		002			KG	0.015	
				00004	ZPP ,COARSE PITCH PC 8.8 IS:1367 PT.-1	132	HEX BOLT M12 X 70 TK WDT LEN ID OD DIM1					KG	0.075	
				00008	M3, ZPP ,COARSE PITCH PC 8.8 IS:1367 PT.-1	133	HEX BOLT M16 X 70 TK WDT LEN ID OD DIM1					KG	0.138	
				00004	M3,ZPP ,COARSE PITCH PC 8.8 IS:1367 PT.-1	134	HEX BOLT M16 X 110 TK WDT LEN ID OD DIM1					KG	0.199	
				00024	M3,ZPP ,COARSE PITCH PC 8.8 IS:1367 PT.-1	135	HEX BOLT M16 X 55 TK WDT LEN ID OD DIM1					KG	0.120	
				00006	M3,ZPP ,COARSE PITCH PC 8.8 IS:1367 PT.-1	136	HEX BOLT M20 X 85 TK WDT LEN ID OD DIM1					KG	0.268	
				00008	M3,ZPP ,COARSE PITCH PC 8.8 IS:1367 PT.-1	137	HEX BOLT M20 X 100 TK WDT LEN ID OD DIM1					KG	0.304	
				00008	M3,ZPP ,COARSE PITCH PC 8.8 IS:1367 PT.-1	138	HEX BOLT M36X155 TK WDT LEN ID OD DIM1					KG	1.569	
				00004	ZPP ,COARSE PITCH PC 8 IS:1367 PT.-6	140	NUT M12 TK WDT LEN ID OD DIM1		003				0.017	
				00004	ZPP ,COARSE PITCH PC 8 IS:1367 PT.-6	141	THIN NUT M12 TK WDT LEN ID OD DIM1		003				0.010	

DISTRIBUTION DETAILS					REV NO. 1	PREP BY	CKD BY	APPD BY	DATE 25 NOV 2014
TRE	TRM				PREP BY	CKD BY	APPD BY	DATE	
1	3				KVA	LK	AKP	24 APR 2014	DRG NO 04987000002 SHT 11 OF 13

BILL OF MATERIAL	DEP NO	NO OF IT	NO OF VAR	TYPE OF PRODUCT	WORKORDER	DRG NO	CORE CODE	REV
		181	1	765 KV 500 MVA MEGA	62007A51201	04987000002	65170259	01
					TITLE: CORE ENDFRAME ASSY. CORE LAYING ARI			SHT NO 12 OF 13

DU	VAR03	VAR02	VAR01	VAR00	REMARKS	IT NO	DESCRIPTION / MAT SIZE	DRAWING NO / DETAILS	IT.	MATCODE / MAT SPEC	A/C	UT	UNIT WT / QTY	G/S / ZONE
				00004	ZPP ,COARSE PITCH PC 8 IS:1367 PT.-6	142	NUT M16 TK WDT LEN ID OD DIM1		009				0.038	
				00016	ZPP ,COARSE PITCH PC 8 IS:1367 PT.-6	143	NUT M20 TK WDT LEN ID OD DIM1		004			KG	0.051	
				00008	ZPP ,COARSE PITCH PC 8 IS:1367 PT.-6	144	NUT M36 TK WDT LEN ID OD DIM1					KG	0.080	
				00010	ZPP ,COARSE PITCH PC 8 IS:1367 PT.-6 T2xID11xOD21	145	PLANE WASHER M10 TK WDT LEN ID OD DIM1 2 11 21		005			KG	0.004	
				00008	ZPP ,COARSE PITCH PC 8 IS:1367 PT.-6 T2,5xID13xOD24	146	PLANE WASHER M12 TK WDT LEN ID OD DIM1 2.5 13 24			AA10112		KG	0.006	
				00016	ZPP ,COARSE PITCH PC 8 IS:1367 PT.-6 T3xID21xOD37	147	PLANE WASHER M20 TK WDT LEN ID OD DIM1 3 21 37			AA10112		KG	0.017	
				00016	PART.38 ZPP ,COARSE PITCH , PC 8 IS:1367 PT.-6 T9xID38xOD105	148	PLANE WASHER M36 TK WDT LEN ID OD DIM1 9 38 105			AA10112		KG	0.090	
				00010		150	SPRING WASHER M10 TK WDT LEN ID OD DIM1					KG	0.003	
				00024		151	SPRING WASHER M16 TK WDT LEN ID OD DIM1					KG	0.009	
				00002	GPT.612001.2030-01	160	LEAD TK WDT LEN ID OD DIM1	44987000022	00			KG	0.120	
				00001	GPT.612001.2030-02	161	LEAD TK WDT LEN ID OD DIM1	44987000022	01				0.130	
				00002	GPT.612001.2030-03	162	LEAD TK WDT LEN ID OD DIM1	44987000022	002			KG	0.160	

DISTRIBUTION DETAILS					REV NO. 1	PREP BY	CKD BY	APPD BY	DATE 25 NOV 2014
TRE	TRM				PREP BY	CKD BY	APPD BY	DATE	
1	3				KVA	LK	AKP	24 APR 2014	DRG NO 04987000002 SHT 12 OF 13

BILL OF MATERIAL	DEP NO	NO OF IT	NO OF VAR	TYPE OF PRODUCT	WORKORDER	DRG NO	CORE CODE	REV
		181	1	765 KV 500 MVA MEGA	62007A51201	04987000002	65170259	01
					TITLE: CORE ENDFRAME ASSY. CORE LAYING ARI			SHT NO 13 OF 13

DU	VAR03	VAR02	VAR01	VAR00	REMARKS	IT NO	DESCRIPTION / MAT SIZE	DRAWING NO / DETAILS	IT.	MATCODE / MAT SPEC	A/C	UT	UNIT WT / QTY	G/S / ZONE
				00004	GPT.612001.2031	164	BRACKET TK WDT LEN ID OD DIM1	34987000122	00			KG	72.960	
				00001	GPT.612001.2300 W=119885 KG	170	MAGNETIC SYSTEM(CORE ASSY.) TK WDT LEN ID OD DIM1	14987000022	00			KG	**********	
				00022	B.O. EPOXY	178	INSULATION TK WDT LEN ID OD DIM1 1 70 3470			BP22489		KG	0.230	
				00021	B.O. EPOXY	179	INSULATION TK WDT LEN ID OD DIM1 1 70 4420			BP22489		KG	0.470	
				00001	POLYGLASS BAND 0.40 X 40MM L=1400 MTR.	180	STRIP TK WDT LEN ID OD DIM1			AA25716		KG		
					INSTALLATION INSTRUCTION	181	YOKE BEAM INSTALLATION INSTRU. TK WDT LEN ID OD DIM1	34987000124	00			KG		

128374

DISTRIBUTION DETAILS					REV NO. 1	PREP BY	CKD BY	APPD BY	DATE 25 NOV 2014
TRE	TRM				PREP BY	CKD BY	APPD BY	DATE	
1	3				KVA	LK	AKP	24 APR 2014	DRG NO 04987000002 SHT 13 OF 13

FIRST ANGLE PROJECTION

(ALL DIMENSIONS ARE IN mm)

DRG. NO. 0 498 70 00002

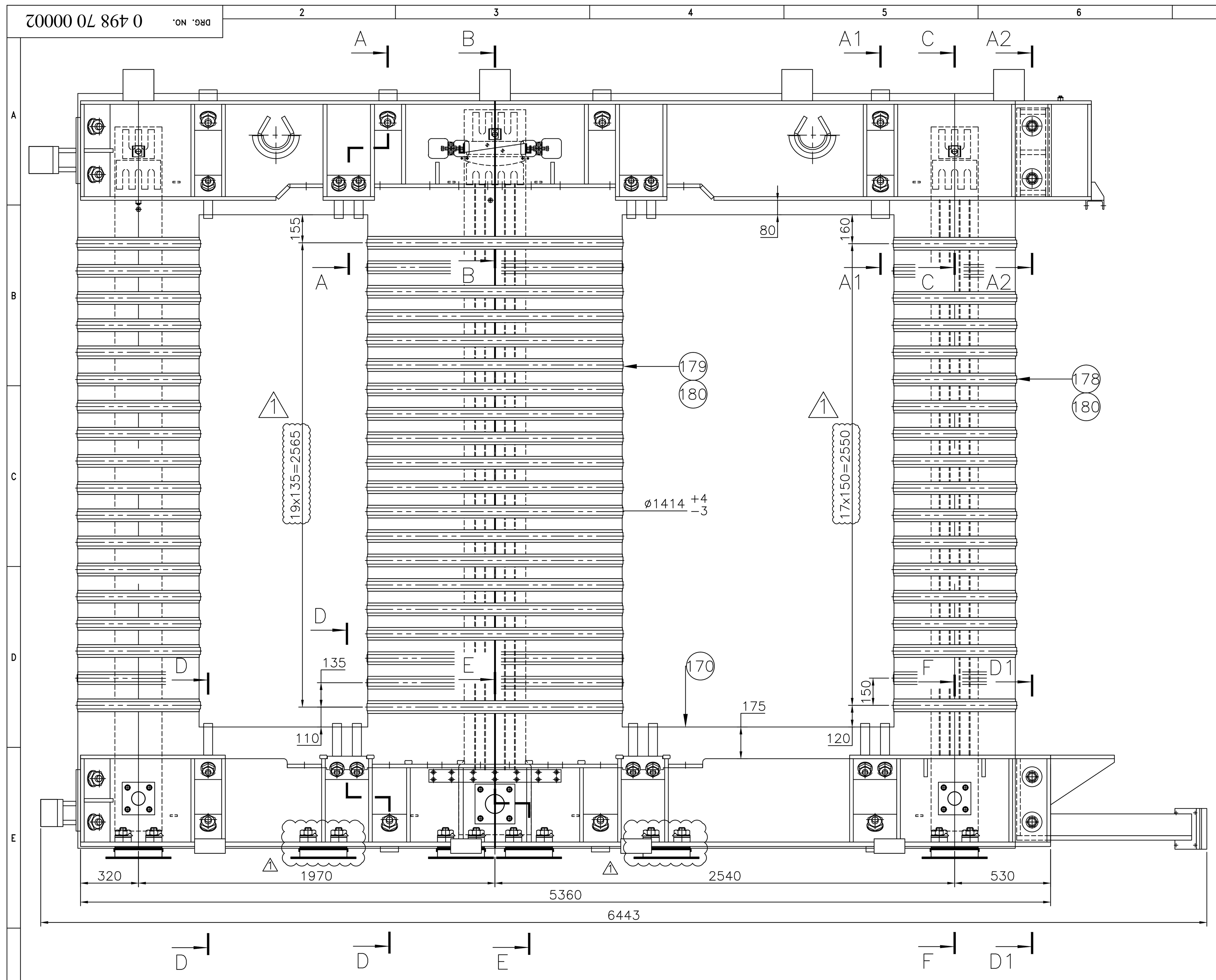

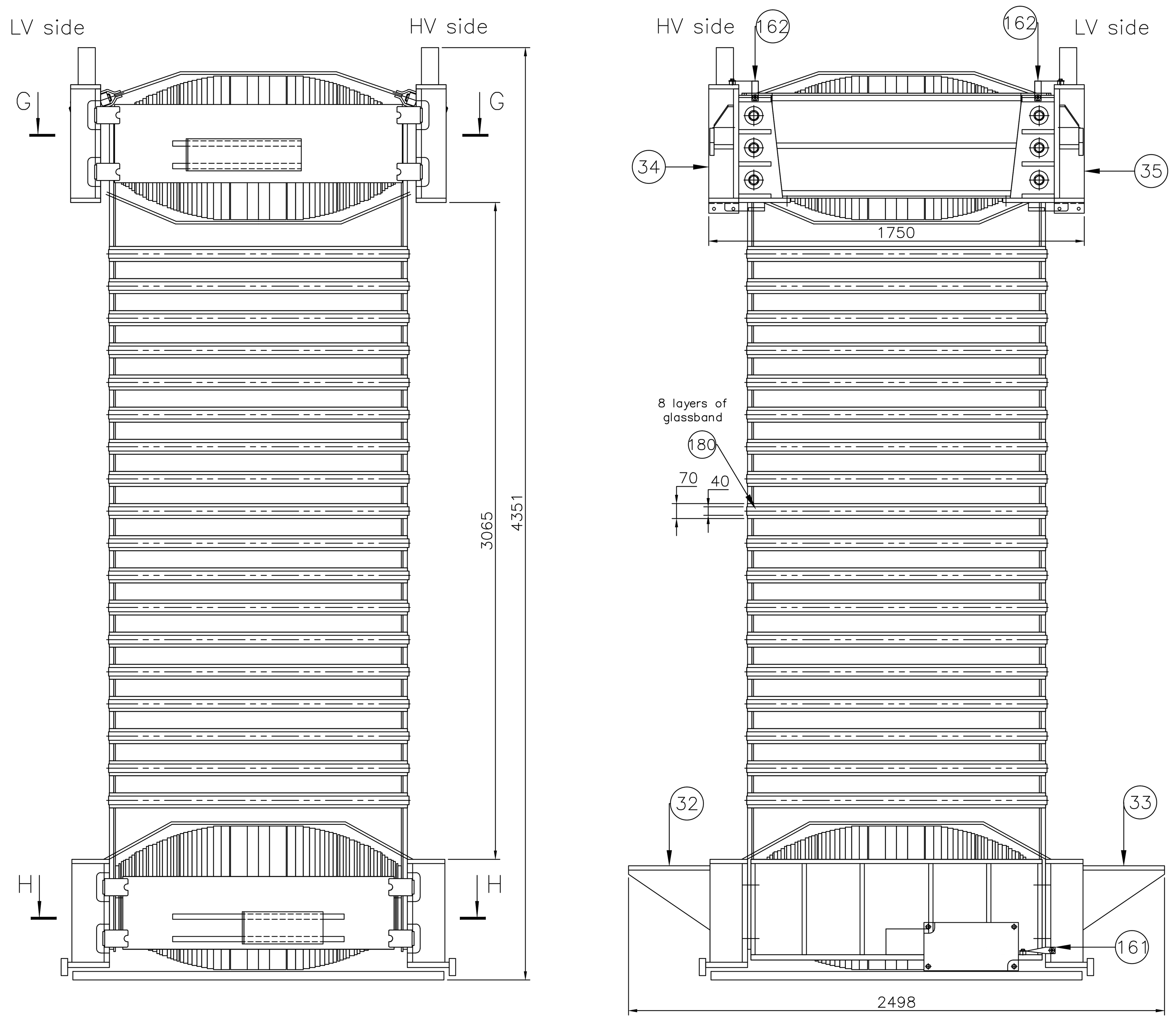

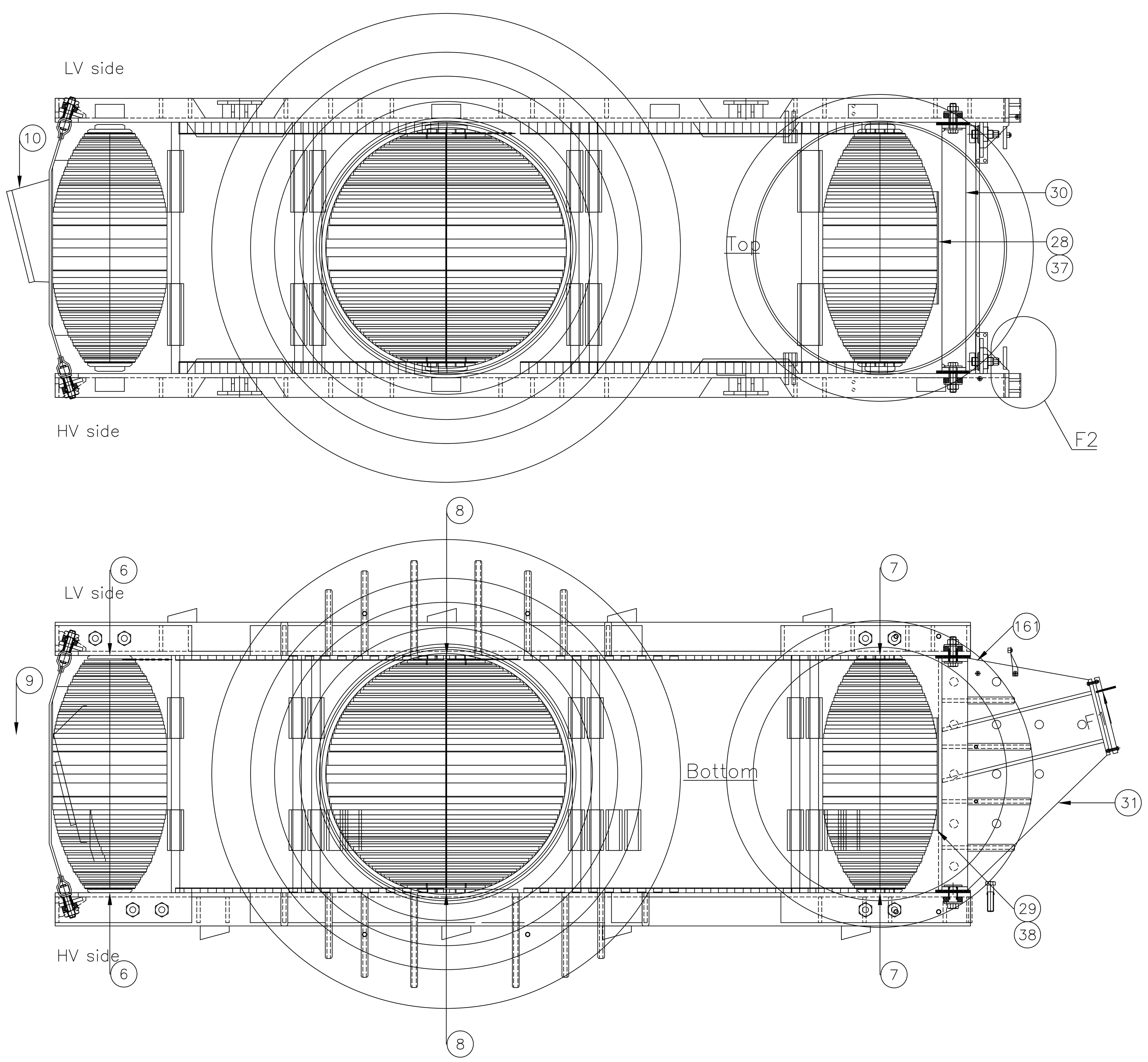

1. Insulation of the following gaps shall be subjected to 10.0 kV applied voltage test(customer requirement):
   Electric steel of magnetic system pos.170 and:
   – yoke beams pos.32,33,34,35;
   – lock plates pos.6,7,8;
   – bands pos.1,2,3,4,5,9,10;
   – feet pos.11;
   Yoke beams pos.32 and pos.33 – bands pos.2,5,9.
   Yoke beams pos.34 and pos.35 – bands pos.1,3,4,10.
   Yoke beams pos.32 and pos.33 – feet pos.11.
   Core plates pos.6,7,8 – Yoke beams pos.33 and pos.35 (LV side).
   Core plates pos.6,7,8 – Yoke beams pos.32 and pos.34 (HV side).
2. The insulation between the magnetic system pos.170 and yoke beams with core plates shall be done according to Fig. 2.
3. The clearance in the lifting unit of the main leg of the upper yoke (Detail of J) shall be set by bolts pos.134, and locked by angles pos.96 after assembly of the upper yoke.
4. The clearance in the lifting units of the upper yoke by section C–C, B–B shall be set by pressboard spacers, pos.112 and pos.113,114.
5. When assembly of the magnetic core on the table the feet shall be leveled as for vertical and along the single line between each other. If necessary use the plates pos.111. ⚠
6. Bands tighting forces and the place of installation are shown in Fig. 3.
7. Press magnetic system before taping of glass band.
8. Tape magnetic system legs by glass band pos.180. Tighting force of the glass bands pos.180 should be 700–1150 H/cm.
9. Limiting deviation for tighting force is +10 %. The magnetic system and core shall be pressed with bands (see Fig.3) in 3 stages:
   1 –st stage = 0.3 P nom.
   2 –d stage = 0.6 P nom.
   3 –d stage = 1.0 P nom.
   Where Pnom. is nominal tighting force (see Table 1).
10. Pressing with bands shall be begun from the middle part of the magnetic system.
11. The core shall be earthed in accordance with Fig.1.
12. Prior to mounting of the upper yoke beams, insulation pos.14,17,113,114 and segment pos.94 shall be tied to beams holes (see Detail of J). Disconnect prior to fastening by wedges pos.93.
13. Before mounting of the yoke beams the wedges pos.93 shall be attached to the beam by the temporary bolts pos.133. Disconnect prior to fastening by wedges pos.93.
14. Core threaded connections shall be locked, tightened after thermovacuum treatment of the active part.
15. The core without the upper yoke shall be lifted using a provisional bracket. (Fig.4)
16. Deviation of the core leg axis from the vertical of the transformer should not exceed 1mm per meter run of height. Measurement is done on the leg between upper and lower yokes of the core.
17. The rest technical requirements unspecified in the drawing shall be made in accordance with the customer normative documentation after agreement with the development contractor of design documentation.

Q'TY	NO.	NAME	MATERIAL	DWG. NO. & SPEC MATERIAL CODE	SIZE TxWxL	REMARK
1	120	Band insulation		GPT.612001.2021–01		
1	121	Band insulation		GPT.612001.2021–02		
2	122	Band insulation		GPT.612001.2022–01		
3	123	Band insulation		GPT.612001.2022–02		
1	124	Band insulation		GPT.612001.2023		
1	125	Band insulation		GPT.612001.2024		
⚠ 6	126	Foot insulation		GPT.612001.2025–01		
4	127	Insulation		GPT.612001.2026		
2	128	Insulation		GPT.612001.2027		
2	129	Side beam insulation		GPT.612001.2028		
2	130	Side beam insulation		GPT.612001.2029		
10	131	Hex bolt	MS AA10112	M10x15		
4	132	Hex bolt	MS AA10112	M12x70		
8	133	Hex bolt	MS AA10112	M16x70		
4	134	Hex bolt	MS AA10112	M16x110		
24	135	Hex bolt	MS AA10112	M16x55		
6	136	Hex bolt	MS AA10112	M20x85		
8	137	Hex bolt	MS AA10112	M20x100		
8	138	Hex bolt	MS AA10112	M36x155		
4	140	Nut	MS AA10112	M12		
4	141	Thin nut	MS AA10112	M12		
4	142	Nut	MS AA10112	M16		
16	143	Nut	MS AA10112	M20		
8	144	Nut	MS AA10112	M36		
10	145	Plane washer	MS AA10112	M10	T2xID11xOD21	
8	146	Plane washer	MS AA10112	M12	T2,5xID13xOD24	
16	147	Plane washer	MS AA10112	M20	T3xID21xOD37	
16	148	Plane washer	MS AA10112	Part.38	T9xID38xOD105	M36
10	150	Spring washer		M10		
24	151	Spring washer		M16		
2	160	Lead		GPT.612001.2030–01		
1	161	Lead		GPT.612001.2030–02		
2	162	Lead		GPT.612001.2030–03		
4	164	Bracket		GPT.612001.2031		
1	170	Magnetic system		GPT.612001.2300		
36	178	Insulation	BP 22489		1x70x3470	0,38kg
20	179	Insulation	BP 22489		1x70x4420	0,47kg
1	180	Strip	AA 25716	Polyglass band 0,4x40 mm		1700m
	181	Yoke beam installation Instruction				

Q'TY	NO.	NAME	MATERIAL	DWG. NO. & SPEC MATERIAL CODE	SIZE TxWxL	REMARK
4	1	Band		GPT.612001.2001–01		
4	2	Band		GPT.612001.2001–02		
1	3	Band		GPT.612001.2001–03		
5	4	Band		GPT.612001.2002–01		
7	5	Band		GPT.612001.2002–02		
2	6	Side lock plate		GPT.612001.2003		
2	7	Side lock plate		GPT.612001.2004		
2	8	Main lock plate		GPT.612001.2005		
1	9	Bottom side band		GPT.612001.2006		
1	10	Top side band		GPT.612001.2007		
⚠ 6	11	Foot		GPT.612001.2008		
24	12	Washer		GPT.612001.2010–01		M30
⚠ 50	13	Washer		GPT.612001.2010–02		M36
2	14	Insulation		GPT.612001.2011		
4	15	Insulation		GPT.612001.2012		
4	16	Insulation		GPT.612001.2013–01		
2	17	Insulation		GPT.612001.2014		
1	18	Bottom yoke insulation		GPT.612001.2015		
1	19	Bottom yoke insulation		GPT.612001.2015–01		
1	20	Bottom yoke insulation		GPT.612001.2016		
1	21	Bottom yoke insulation		GPT.612001.2016–01		
1	22	Top yoke insulation		GPT.612001.2017		
1	23	Top yoke insulation		GPT.612001.2017–01		
1	24	Top yoke insulation		GPT.612001.2018		
1	25	Top yoke insulation		GPT.612001.2018–01		
4	26	Lock plate insulation		GPT.612001.2019		
2	27	Lock plate insulation		GPT.612001.2035		
1	28	Side beam insulation		GPT.612001.2036		
1	29	Side beam insulation		GPT.612001.2037		
1	30	Top side beam		GPT.612001.2040		
1	31	Bottom side beam		GPT.612001.2041		
1	32	Bottom HV yoke beam		GPT.612001.2050		
1	33	Bottom LV yoke beam		GPT.612001.2060		
1	34	Upper HV yoke beam		GPT.612001.2080		
1	35	Upper LV yoke beam		GPT.612001.2090		
1	37	Side beam insulation		GPT.612001.2038		
1	38	Side beam insulation		GPT.612001.2039		
8	40	Step block	LW AA22002	Part.1		
2	41	Step block	LW AA22002	Part.2–01		
4	42	Step block	LW AA22002	Part.2–02		
2	43	Step block	LW AA22002	Part.2–03		
2	44	Step block	LW AA22002	Part.3–01		
6	45	Step block	LW AA22002	Part.3–02		
8	46	Step block	LW AA22002	Part.4		
4	47	Step block	LW AA22002	Part.5		
⚠ 8	48	Step block	LW AA22002	Part.6		
2	49	Step block	LW AA22002	Part.7		
2	50	Step block	LW AA22002	Part.8		
8	51	Insulation	LPB AA21109	Part.9		
4	52	Insulation	Nomex	Part.10–01		
4	53	Insulation	Nomex	Part.10–02		
4	54	Insulation	Nomex	Part.10–03		
4	55	Insulation	Nomex	Part.10–04		
⚠ 24	56	Tube	Nomex	Part.11–01		
26	57	Tube	Nomex	Part.11–02		
24	58	Tube	Nomex	Part.11–03		
6	59	Tube	Nomex	Part.11–04		
8	60	Tube	Nomex	Part.11–05		
⚠ 20	62	Insulation	PB AA21108	Part.12–01		
24	63	Insulation	PB AA21108	Part.12–02		
4	64	Channel	Nomex	Part.13–01		
1	65	Channel	Nomex	Part.13–02		
2	66	Channel	Nomex	Part.13–03		
1	67	Channel	Nomex	Part.13–04		
3	68	Channel	Nomex	Part.13–05		
4	69	Channel	Nomex	Part.13–06		
1	70	Channel	Nomex	Part.13–07		
1	71	Channel	Nomex	Part.13–08		
1	72	Channel	Nomex	Part.13–09		
⚠ 6	73	Channel	Nomex	Part.14–01		
6	74	Insulation	LPB AA21109	Part.15		
12	75	Insulation	LPB AA21109	Part.16–01		
4	76	Insulation	LPB AA21109	Part.16–02		
4	77	Insulation	LPB AA21109	Part.16–03		
2	78	Insulation	LPB AA21109	Part.16–04		
4	79	Insulation	LPB AA21109	Part.16–05		
4	80	Insulation	LPB AA21109	Part.16–06		
10	81	Insulation	LPB AA21109	Part.17–01		
⚠ 24	82	Insulation	LPB AA21109	Part.18		
48	86	Fiber glass tube	BP22497	Part.21–01		
⚠ 124	87	Fiber glass tube	BP22497	Part.21–02		
12	88	Fiber glass tube	BP22497	Part.21–03		
3	89	Insulation	Nomex	Part.22		
6	90	Insulation	PB AA21108	Part.23		
26	91	Special nut	HTS AA10122	Part.24–01		M36
24	92	Special nut	HTS AA10122	Part.24–02		M30
4	93	Wedge	HTS AA10122	Part.25		
2	94	Segment	HTS AA10122	Part.26		
4	95	Bar	MS AA10108	Part.27		
4	96	Lock plate	MS AA10115	Part.28–01		
8	97	Lock plate	MS AA10115	Part.28–02		
6	98	Washer	MS AA10108	Part.29		
6	99	Screw	HTS AA10501	Part.30		
6	100	Disk	MS AA10108	Part.31		
6	101	Lock plate	MS AA10115	Part.32		
2	102	Lock plate	MS AA10115	Part.33–01		
2	103	Lock plate	MS AA10115	Part.33–02		
26	104	Stud bolt	HTS AA10501	Part.34–01		
24	105	Stud bolt	HTS AA10501	Part.34–02		
⚠ 50	106	Special nut	HTS AA10122	Part.35–01		
24	107	Special nut	HTS AA10122	Part.35–02		
1	108	Plate	MS AA10108	Part.36		
4	109	Plate	Nomex	Part.37–01		
4	110	Plate	Nomex	Part.37–02		
⚠ 24	111	Plate	MS AA 10113	Part.39		
12	112	Insulation	Nomex		3x28x240	0,02kg
6	113	Insulation	Nomex		2x30x360	0,026kg
2	114	Insulation	Nomex		1x30x360	0,013kg
4	117	Band insulation		GPT.612001.2020–01		
1	118	Band insulation		GPT.612001.2020–02		
4	119	Band insulation		GPT.612001.2020–03		

Fig.1 Earthing diagram of core

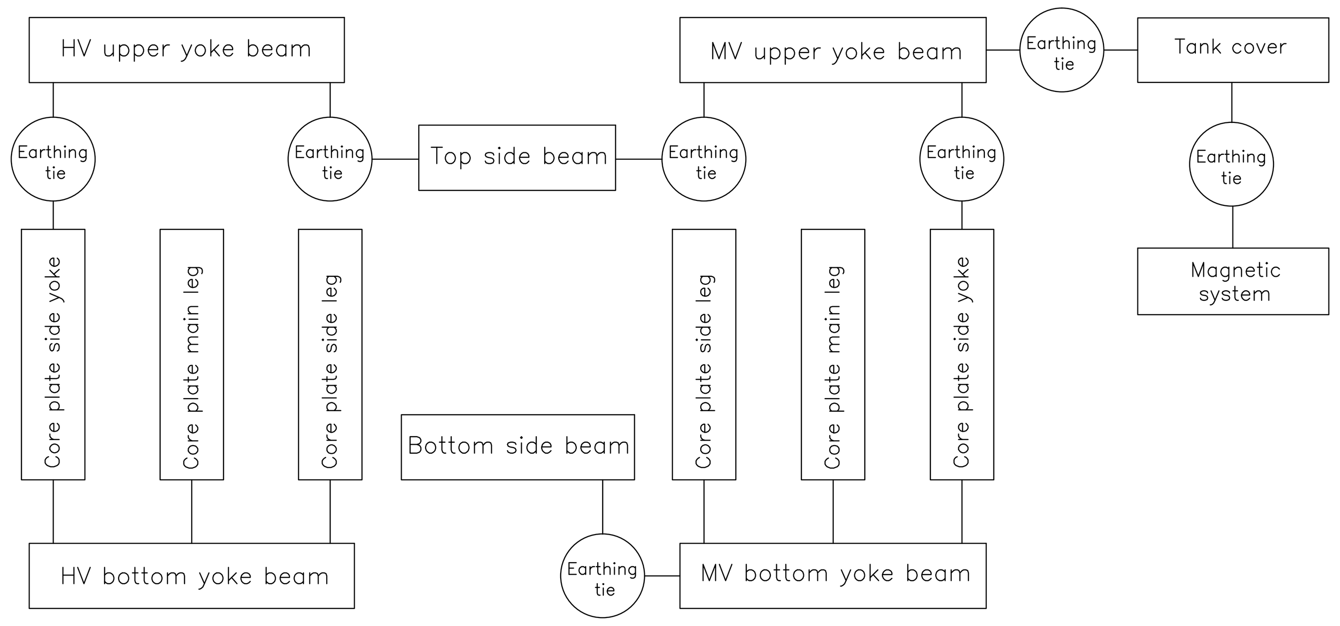

GPT ASSY. DRG. NO. GPT612001.2000 | ITEM NO. | GPT DRG. NO. 0 498 70 00002

ADDITIONAL INFORMATION
WO. NO.- 62007-A-512-01

STATUS OF DRAWING
U

DISTRIBUTION OF PRINTS
TRE-1, TRM-3
FTM-8

उत्पाद का प्रकार या ग्राहक /परियोजना का नाम
TYPE OF PRODUCT OR NAME OF CUSTOMER/PROJECT
500 MVA, 765/400/33 KV 1 PHASE, AUTO TRANSFORMER
MEGHA ENGG. & INFRA LTD.
TRFR & REACTOR PKG FOR WUPPTCL

भारत हेवी इलेक्ट्रिकल्स लिमिटेड भोपाल
BHARAT HEAVY ELECTRICALS LTD. BHOPAL

	नाम/ NAME	हस्ता./ SIGN	दिनांक/DATE
बनाया DRN	SKC	[signature]	30.04.14
जाँचा CKD	LALIT	[signature]	05.05.14
स्वीकृत APPD	AKP	[signature]	08.05.14

वे.रि. की संख्या NO. OF VAR

REV.	DATE		
01	24.11.14	ALTERED	SKC
		CHECKED	LK
		APPROVED	AKP

ITEM NO. 11,13,48,56,62,73 82,87,106,112 QTY. CHANGED. ITEM NO. 111 ADDED. AND SHEET REVISED.

विभाग DEPT TRE | उन. टल. नाप की श्रेणी UNTOL.DIMS. GR. – | अनुपात SCALE | भार कि.ग्रा. WEIGHT (K.G.) 127700 | असे. ड्रॉइंग का संदर्भ REF. TO ASSY. DRG. | मद क्र. ITEM NO. | मद संख्या NO. OF ITEM

कोड CODE 406

शीर्षक/ TITLE
CORE ASSEMBLY DRG.

ड्रॉइंग क्र./DRAWING NO. 0 498 70 00002
पुन./REV 01
पृष्ठ क्र./SHT. No. 01 | पृष्ठों की संख्या/NO. OF SHT. 03

A0

THE INFORMATION ON THIS DOCUMENT IS THE PROPERTY OF BHARAT HEAVY ELECTRICALS LIMITED
IT MUST NOT BE USED DIRECTLY OR INDIRECTLY IN ANY WAY DETRIMENTAL TO THE INTEREST OF THE COMPANY

INVENTORY NO. | SIGN. & DATE | REF. DRG. NO.

FIRST ANGLE PROJECTION

(ALL DIMENSIONS ARE IN mm)

DRG. NO. 0 498 70 00002

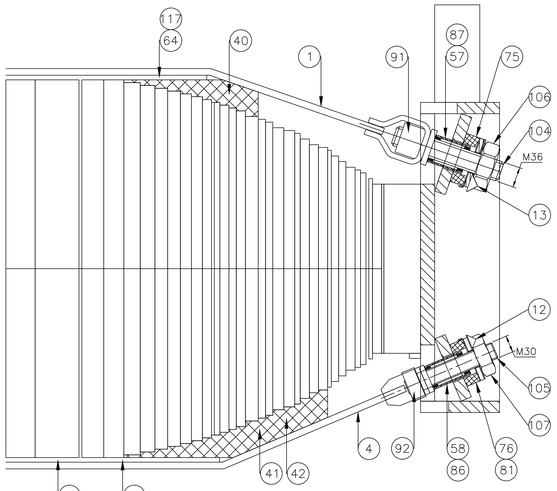

View of A–A(4:1)

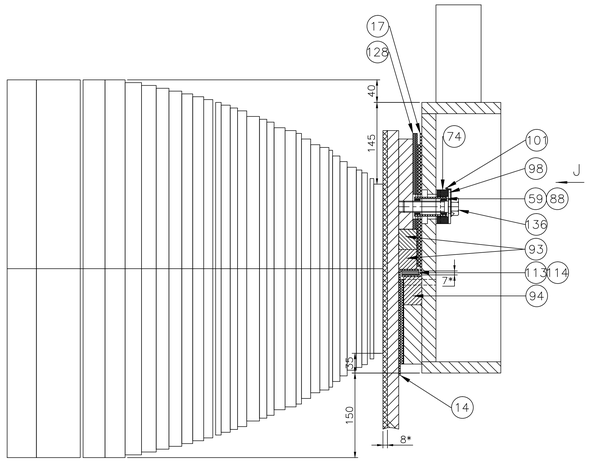

View of B–B(4:1)

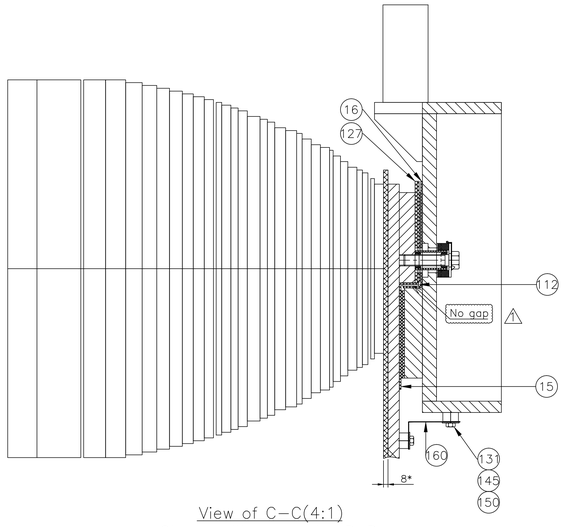

View of C–C(4:1)
Other positions see view B–B

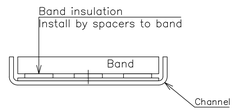

Installation scheme of the band insulation (10:1)

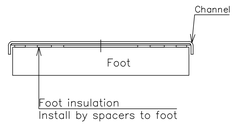

View of E1–E1(5:1)

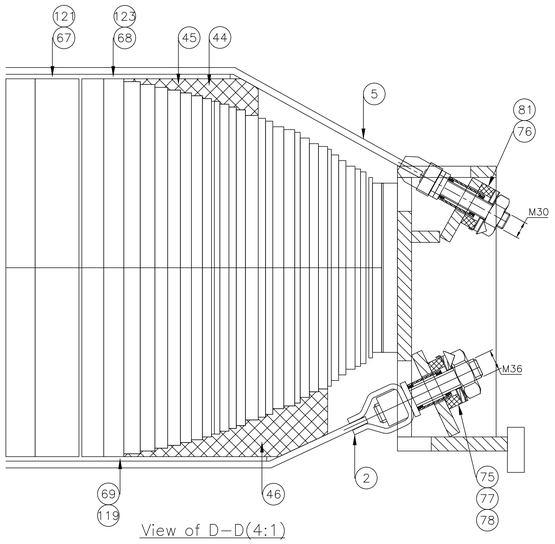

View of D–D(4:1)
Other positions see view A–A

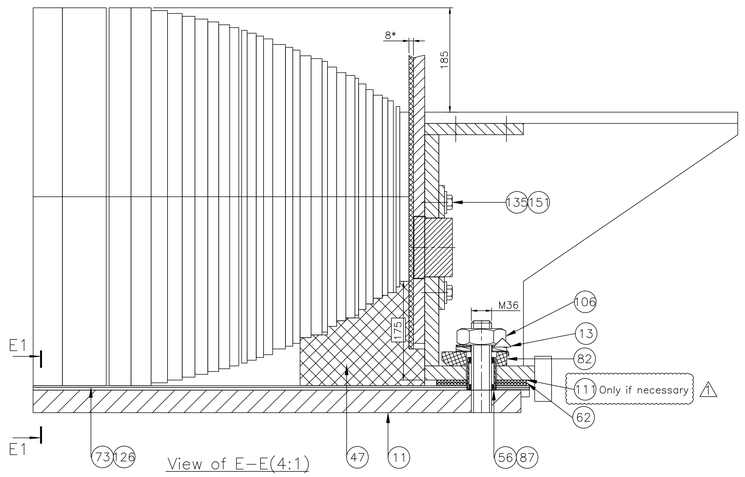

View of E–E(4:1)

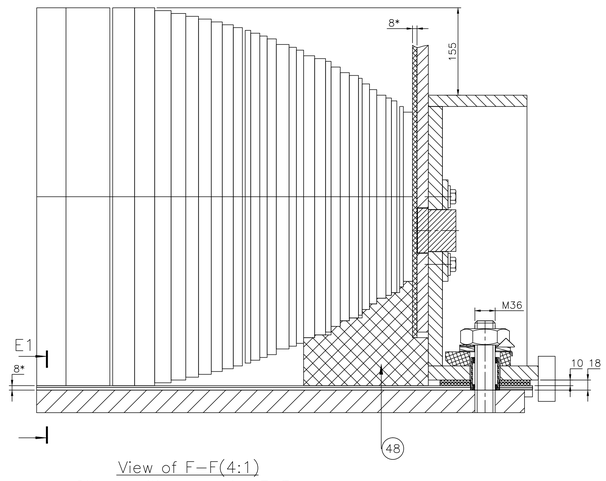

View of F–F(4:1)
Other positions see view E–E

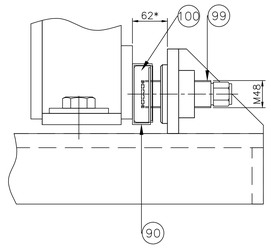

Detail of F2(4:1)

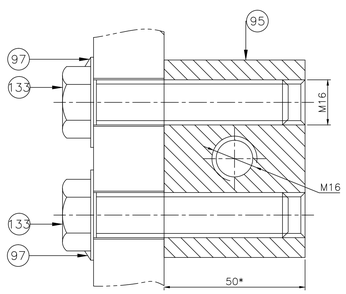

Detail of H(20:1)

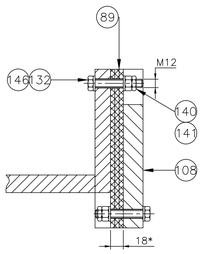

View of F1–F1(5:1)

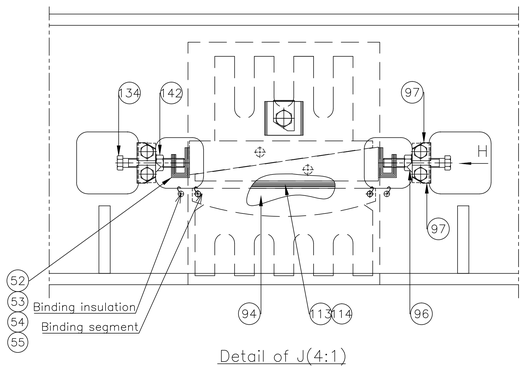

Detail of J(4:1)

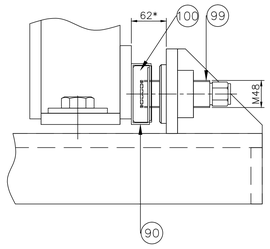

Detail of F2(4:1)

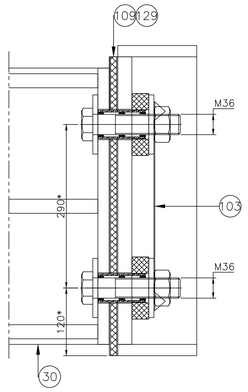

View of A2–A2(4:1)
Other positions see view D1–D1

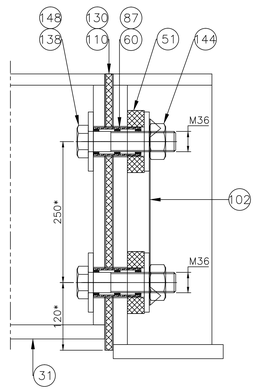

View of D1–D1(4:1)

GPT ASSY. DRG. NO. GPT62005.2000 | ITEM NO. | GPT DRG. NO. 0 498 70 00002

ADDITIONAL INFORMATION
W.O. NO.- 62007-A-512-01

STATUS OF DRAWING
U

DISTRIBUTION OF PRINTS
TRE-1, TRM-3
FTM-8

REV.	DATE	ALTERED	SKC	
01	24.11.14	CHECKED	LK	
		APPROVED	AKP	

SHEET REVISED.

उत्पाद का प्रकार या ग्राहक / परियोजना का नाम
TYPE OF PRODUCT OR NAME OF CUSTOMER/PROJECT: 500 MVA, 765/400/33 KV I PHASE, AUTO TRANSFORMER MEGHA ENGG. & INFRA LTD. TRFR & REACTOR PKG FOR WUPPTCL

भारत हेवी इलेक्ट्रिकल्स लिमिटेड भोपाल
BHARAT HEAVY ELECTRICALS LTD. BHOPAL

	नाम/ NAME	हस्ताक्षर/ SIGN	दिनांक/DATE	पी.ए. की सं./ NO. OF SHT.
तैयार/ DRN.	SKC		30.04.14	
जाँचा/ CHD.	LALIT		05.05.14	
स्वीकृत/ APPD.	AKP		08.05.14	

विभाग/ DEPT. TRE | जाँच, दृष्टि, आदि की कैटगरी/ UNTOL.DIMS. CR. | अनुपात/ SCALE | भार/ WEIGHT (KG) 127700 | आइटम/ REF. TO ASSY. DRG. | आइ. सं./ ITEM NO.
शाखा/ CODE 406 | –

शीर्षक/ TITLE
CORE ASSEMBLY DRG.

ड्राईंग सं./DRAWING NO. 0 498 70 00002 | पुनरीक्षण/REV 01

पृष्ठ सं./SHT. No. 02 | पृष्ठों की संख्या/NO. OF SHT. 03

A0

THE INFORMATION ON THIS DOCUMENT IS THE PROPERTY OF BHARAT HEAVY ELECTRICALS LIMITED
IT MUST NOT BE USED DIRECTLY OR INDIRECTLY IN ANY WAY DETRIMENTAL TO THE INTEREST OF THE COMPANY

INVENTORY NO. | SIGN. & DATE | REF. DRG. NO.

FIRST ANGLE PROJECTION

(ALL DIMENSIONS ARE IN mm)

DRG. NO. 0 498 70 00002

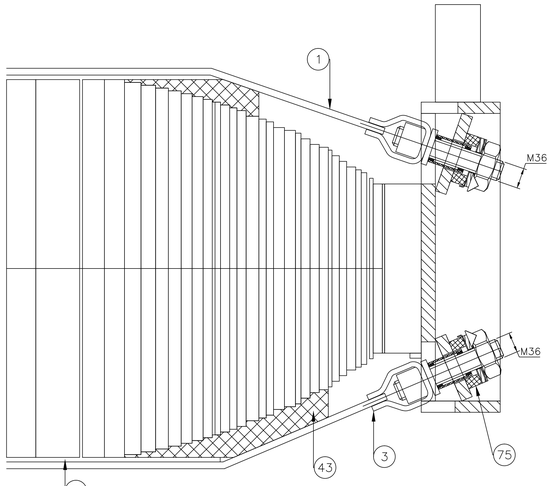

View of A1–A1(5:1)
Other positions see view A–A

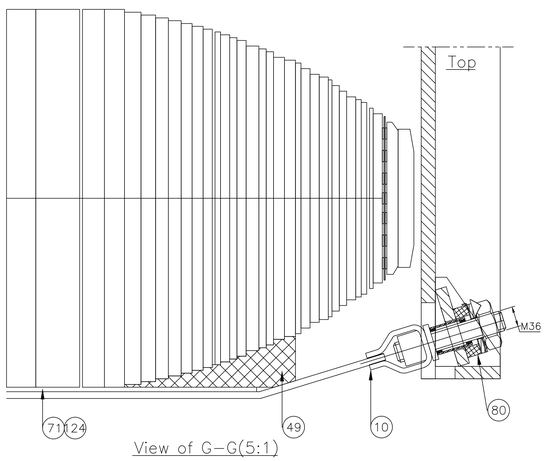

View of G–G(5:1)
Other positions see view A–A

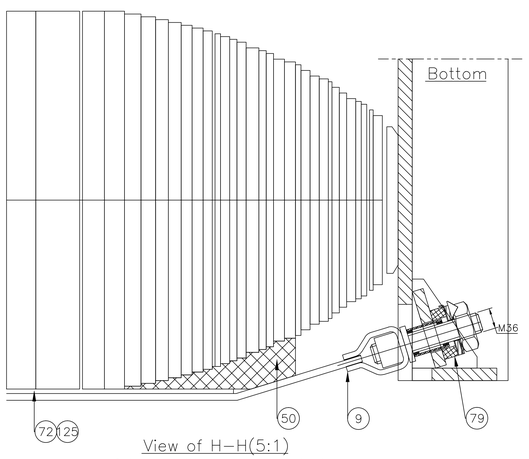

View of H–H(5:1)
Other positions see view A–A

Fig.2 Insulation between magnetic system and yoke beams with core plates.

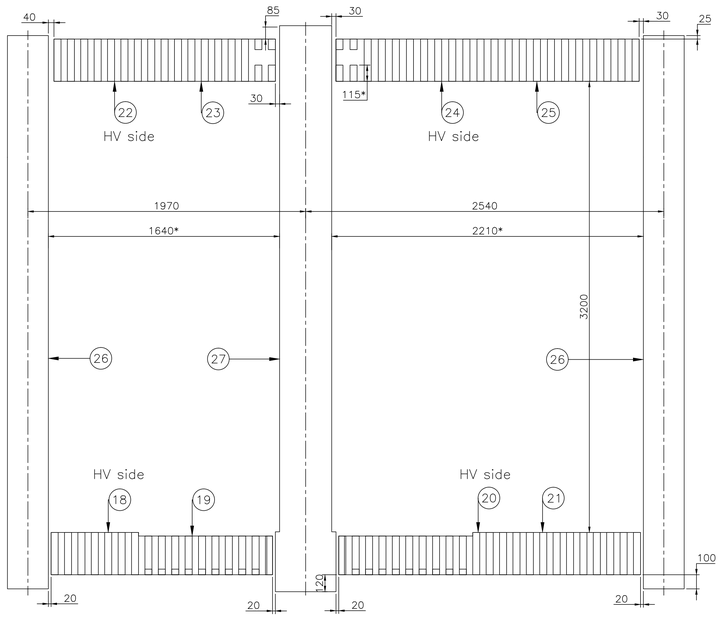

Fig.3 Tightening forces and installation places of the bands (See table 1).

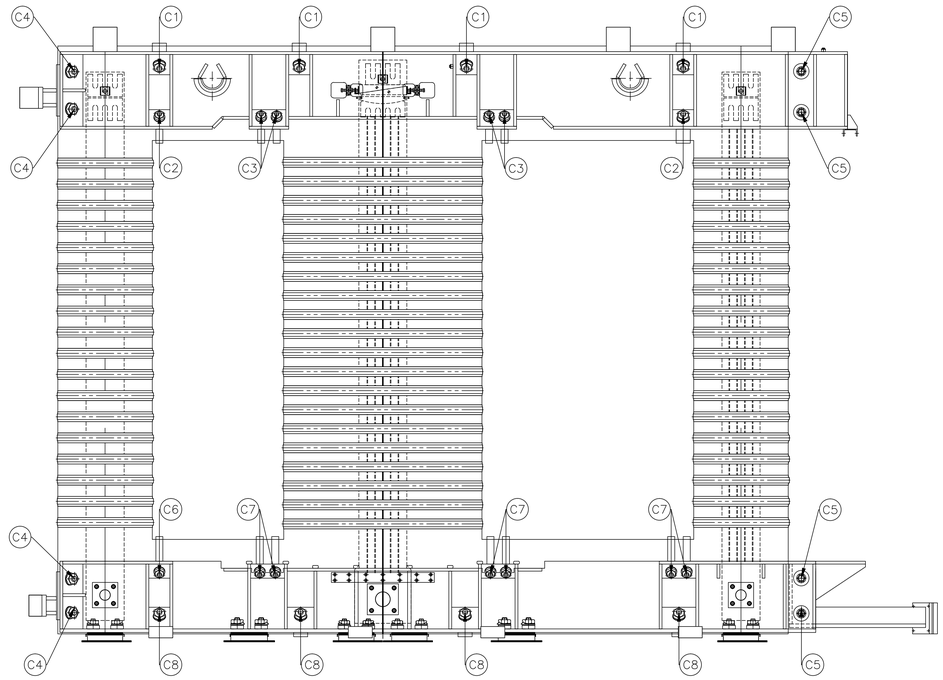

Fig.4 The core without of the upper yoke. Lifting using the provisional brackets.

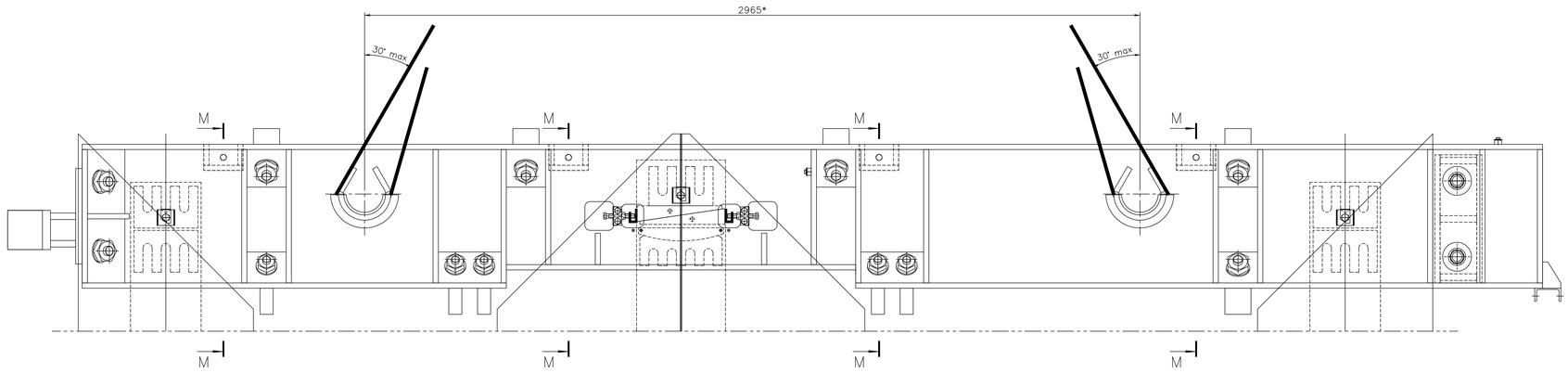

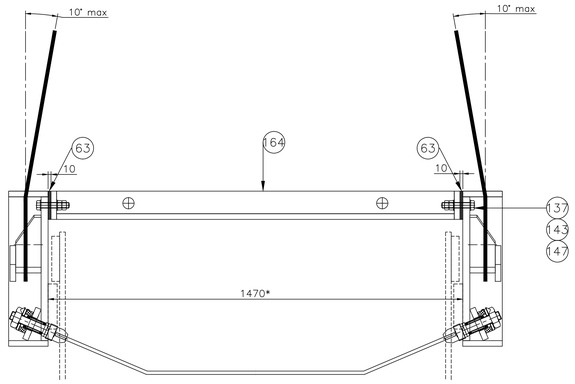

View of M–M(2:1)

Table 1. Installation places and tighting forces of the bands

N of installation place	Tighting force, kN	Torque, Nm
C1 (M36)	91,8	997
C2 (M30)	94,3	859
C3 (M30)	47,2	430
C4 (M36)	90,7	985
C5 (M36)	86,8	943
C6 (M30)	99,2	903
C7 (M30)	49,6	452
C8 (M36)	95,7	1040

1. The core assembling shall be made on a horizontal table. (GPT.612001.2000). Assembling without apper yoke.
2. Set ap the provisional brackets pos.164 with spasers pos.63. Tighten by hex bolt pos.137 (View of M–M).
3. Tighten the all fasteners and bands after the core will be assembled.
4. Turn over the core from horizontal to vertical position according to customer technology. Install the core on a horizontal area.
5. Lifting up the core according to Fig.4.

GPT ASSY. DRG. NO. GPT612001.2000 | ITEM NO. | GPT DRG. NO. 0 498 70 00002

ADDITIONAL INFORMATION
WO. NO.- 62007-A-512-01

STATUS OF DRAWING
U

DISTRIBUTION OF PRINTS
TRE-1, TRM-3
FTM-8

REV.	DATE	ALTERED	SKC	
01	24.11.14	CHECKED	LK	
		APPROVED	AKP	

SHEET REVISED.

उत्पाद का प्रकार या ग्राहक / परियोजना का नाम
TYPE OF PRODUCT OR NAME OF CUSTOMER/PROJECT: 500 MVA, 765/400/33 KV I PHASE, AUTO TRANSFORMER MEGHA ENGG. & INFRA LTD. TRFR & REACTOR PKG FOR WUPPTCL

भारत हेवी इलेक्ट्रिकल्स लिमिटेड भोपाल
BHARAT HEAVY ELECTRICALS LTD. BHOPAL

	NAME	SIGN	DATE
DRN	SKC		30.04.14
CHD	LALIT		05.05.14
APPD	AKP		08.05.14

विभाग DEPT. TRE | कोड CODE 406 | उत्पाद, इकाई, ग्राहक का नाम UNITS, DIMS. OR – | अनुपात SCALE | भार WEIGHT (KG) 127700 | संदर्भ REF. TO ASSY. DRG. | भाग सं. ITEM NO. | भाग क्रमांक NO. OF ITEM

शीर्षक TITLE: CORE ASSEMBLY DRG.

ड्राईंग सं./DRAWING NO. 0 498 70 00002 | पुनरीक्षण/REV. 01

पृष्ठ सं./SHT. No. 03 | पृष्ठों की संख्या/NO. OF SHT. 03

A0

THE INFORMATION ON THIS DOCUMENT IS THE PROPERTY OF BHARAT HEAVY ELECTRICALS LIMITED
IT MUST NOT BE USED DIRECTLY OR INDIRECTLY IN ANY WAY DETRIMENTAL TO THE INTEREST OF THE COMPANY

INVENTORY NO. | SIGN. & DATE | REF. DRG. NO.

BILL OF MATERIAL	DEP NO	NO OF IT	NO OF VAR	TYPE OF PRODUCT	WORKORDER	DRG NO	CORE CODE	REV
		49	1	500MVA,765KV,1PH. MEGA	62007A51201	14987000018	65170702	02
					TITLE: BOTTOM END FRAME H.V.SIDE BOTTOM END FRA			SHT NO 1 OF 4

DU	VAR03	VAR02	VAR01	VAR00	REMARKS	IT NO	DESCRIPTION / MAT SIZE	TK	WDT	LEN	ID	OD	DIM1	DRAWING NO / DETAILS	IT. VAR	MATCODE / MAT SPEC	A/C	UT	UNIT WT / QTY	G/S / ZONE
				00005	PART 1 TO DETAIL	001	RIB	20	150	460						AA10740		KG	10.900	
				00001	PART 2 TO DETAIL	002	RIB	20	150	460						AA10108		KG	9.400	
				00002	PART 3-01 TO DETAIL	003	RIB	20	100	150						AA10740		KG	1.540	
				00001	PART 3-02 TO DETAIL	004	RIB	20	160	115						AA10108		KG	1.850	
				00002	PART 4-01 TO DETAIL	006	RIB	20	430	465						AA10740		KG	16.900	
				00002	PART 29 TO DETAIL	007	RIB	25	430	530						AA10740		KG	23.300	
				00002	PART 5 TO DETAIL	008	RIB	20	380	460						AA10740		KG	16.200	
				00002	PART 6 TO DETAIL	009	RIB	20	175	460						AA10740		KG	11.100	
				00001	PART 7 TO DETAIL	010	PLATE	25	460	5360						AA10108		KG	431.000	
				00001	PART 8 TO DETAIL	011	PLATE	20	175	1356						AA10740		KG	37.100	
				00001	PART 9 TO DETAIL	012	PLATE	20	175	800						AA10108		KG	19.300	
				00001	PART 10 TO DETAIL	013	PLATE	20	175	1110						AA10740		KG	26.000	

DISTRIBUTION DETAILS					REV NO. 2	PREP BY	CKD BY	APPD BY	DATE 03 APR 2015
TRE	TRM				PREP BY	CKD BY	APPD BY	DATE	
1	3				RT	LK	AKP	24 APR 2014	DRG NO 14987000018 SHT 1 OF 4

BILL OF MATERIAL	DEP NO	NO OF IT	NO OF VAR	TYPE OF PRODUCT	WORKORDER	DRG NO	CORE CODE	REV
		49	1	500MVA,765KV,1PH. MEGA	62007A51201	14987000018	65170702	02
					TITLE: BOTTOM END FRAME H.V.SIDE BOTTOM END FRA			SHT NO 2 OF 4

DU	VAR03	VAR02	VAR01	VAR00	REMARKS	IT NO	DESCRIPTION / MAT SIZE	DRAWING NO / DETAILS	IT.	MATCODE / MAT SPEC	A/C	UT	UNIT WT / QTY	G/S / ZONE
				00001	PART 11 TO DETAIL	014	PLATE TK 25, WDT 195, LEN 5360, ID, OD, DIM1			AA10108		KG	196.000	
				00001	PART 12-01 TO DETAIL	015	PLATE TK 20, WDT 160, LEN 150, ID, OD, DIM1			AA10108		KG	3.420	
				00002	PART 12-02 TO DETAIL	016	PLATE TK 20, WDT 160, LEN 190, ID, OD, DIM1			AA10108		KG	4.420	
				00001	PART 12-03 TO DETAIL	017	PLATE TK 20, WDT 160, LEN 240, ID, OD, DIM1			AA10108		KG	5.680	
				00001	PART 12-04 TO DETAIL	018	PLATE TK 20, WDT 120, LEN 150, ID, OD, DIM1			AA10108		KG	2.470	
				00002	PART 12-05 TO DETAIL	019	PLATE TK 20, WDT 144, LEN 220, ID, OD, DIM1			AA10108		KG	4.260	
				00002	PART 13 TO DETAIL	020	PLATE TK 20, WDT 140, LEN 240, ID, OD, DIM1			AA10740		KG	4.560	
				00001	PART 14 TO DETAIL	021	PLATE TK 20, WDT 120, LEN 240, ID, OD, DIM1			AA10740		KG	3.810	
				00002	PART 15 TO DETAIL	022	PLATE TK 10, WDT 180, LEN 180, ID, OD, DIM1			AA10108		KG	2.100	
				00001	PART 16 TO DETAIL	023	PLATE TK 10, WDT 220, LEN 220, ID, OD, DIM1			AA10108		KG	3.020	
				00001	PART-17 TO DETAIL	024	LOCK PIN TK, WDT, LEN, ID, OD, DIM1			AA10501		KG		
				00002	PART-18 TO DETAIL	025	LOCK PIN TK, WDT, LEN, ID, OD, DIM1			AA10501		KG		

DISTRIBUTION DETAILS					REV NO. 2	PREP BY	CKD BY	APPD BY	DATE 03 APR 2015
TRE	TRM				PREP BY	CKD BY	APPD BY	DATE	
1	3				RT	LK	AKP	24 APR 2014	DRG NO 14987000018 SHT 2 OF 4

BILL OF MATERIAL	DEP NO	NO OF IT	NO OF VAR	TYPE OF PRODUCT	WORKORDER	DRG NO	CORE CODE	REV
		49	1	500MVA,765KV,1PH. MEGA	62007A51201	14987000018	65170702	02
					TITLE: BOTTOM END FRAME H.V.SIDE BOTTOM END FRA			SHT NO 3 OF 4

DU	VAR03	VAR02	VAR01	VAR00	REMARKS	IT NO	DESCRIPTION / MAT SIZE	TK	WDT	LEN	ID	OD	DIM1	DRAWING NO / DETAILS	IT.	MATCODE / MAT SPEC	A/C	UT	UNIT WT / QTY	G/S / ZONE
				00002	PART 19-01 TO DETAIL	026	PLATE	20	40	195						AA10740		KG	1.220	
				00002	PART 19-02 TO DETAIL	027	PLATE	20	40	380						AA10740		KG	2.420	
				00002	PART 19-03 TO DETAIL	028	PLATE	20	40	490						AA10740		KG	3.110	
				00002	PART 19-04 TO DETAIL	029	PLATE	20	40	555						AA10740		KG	3.490	
				00004	PART 20 TO DETAIL	030	PLATE	80	80	170						AA10108		KG	6.300	
				00004	PART 21 DIA. 20X10 THIKNESS	031	FIXING PIN	10			14	20				AA10112		KG	0.010	
				00004	PART 22 TO DETAIL	032	PLATE	8	20	40						AA10108		KG	0.056	
				00002	PART 23 TO DETAIL	033	PLATE	20	175	189						AA10740		KG	5.200	
				00001	PART 24 TO DETAIL	034	ANGLE									AA10108		KG		
				00001	PART 24-01 TO DETAIL	035	ANGLE									AA10108		KG	3.390	
				00002	PART 25 TO DETAIL	036	PLATE	16	90	150						AA10108		KG	1.690	
				00001	PART 26 TO DETAIL	037	PLATE	16	70	125						AA10108		KG		

DISTRIBUTION DETAILS					REV NO. 2	PREP BY	CKD BY	APPD BY	DATE 03 APR 2015
TRE	TRM				PREP BY	CKD BY	APPD BY	DATE	
1	3				RT	LK	AKP	24 APR 2014	DRG NO 14987000018 SHT 3 OF 4

BILL OF MATERIAL	DEP NO	NO OF IT	NO OF VAR	TYPE OF PRODUCT	WORKORDER	DRG NO	CORE CODE	REV
		49	1	500MVA,765KV,1PH. MEGA	62007A51201	14987000018	65170702	02
					TITLE: BOTTOM END FRAME H.V.SIDE BOTTOM END FRA			SHT NO 4 OF 4

DU	VAR03	VAR02	VAR01	VAR00	REMARKS	IT NO	DESCRIPTION / MAT SIZE	TK	WDT	LEN	ID	OD	DIM1	DRAWING NO / DETAILS	IT.	MATCODE / MAT SPEC	A/C	UT	UNIT WT / QTY	G/S / ZONE
				00001	PART 27 TO DETAIL	038	PLATE	20	150	170						AA10108		KG	4.010	
				00001	PART 28 TO DETAIL	039	RIB	20	150	460						AA10740		KG	10.900	
				00003	GPT.612001.2009	040	GROUNDIN BAR							44987000029		AA10740		KG	0.050	
				00001	PART 31 TO DETAIL	043	COPPER PLATE	4	230	905						AA12003		KG	7.100	
				00001	PART 32 TO DETAIL	044	COPPER PLATE	4	230	905						AA12003		KG	7.100	
				00001	PART 33 TO DETAIL	045	COPPER PLATE	4	70	730						AA12003		KG	1.700	
				00038	DIA. 8X11(+0,5)	046	PIN									AA10112		KG	0.004	
				00038	PART 34 TO DETAIL	047	WASHER									AA10113		KG	0.004	
				00001		048	PLATE	20	50	150						AA10740		KG	1.180	
				00003		049	PLATE	20	50	240						AA10740		KG	1.880	

1063.5

DISTRIBUTION DETAILS					REV NO. 2	PREP BY	CKD BY	APPD BY	DATE 03 APR 2015
TRE	TRM				PREP BY	CKD BY	APPD BY	DATE	
1	3				RT	LK	AKP	24 APR 2014	DRG NO 14987000018 SHT 4 OF 4

FIRST ANGLE PROJECTION

(ALL DIMENSIONS ARE IN mm)

DRG. NO. 1 498 70 00018

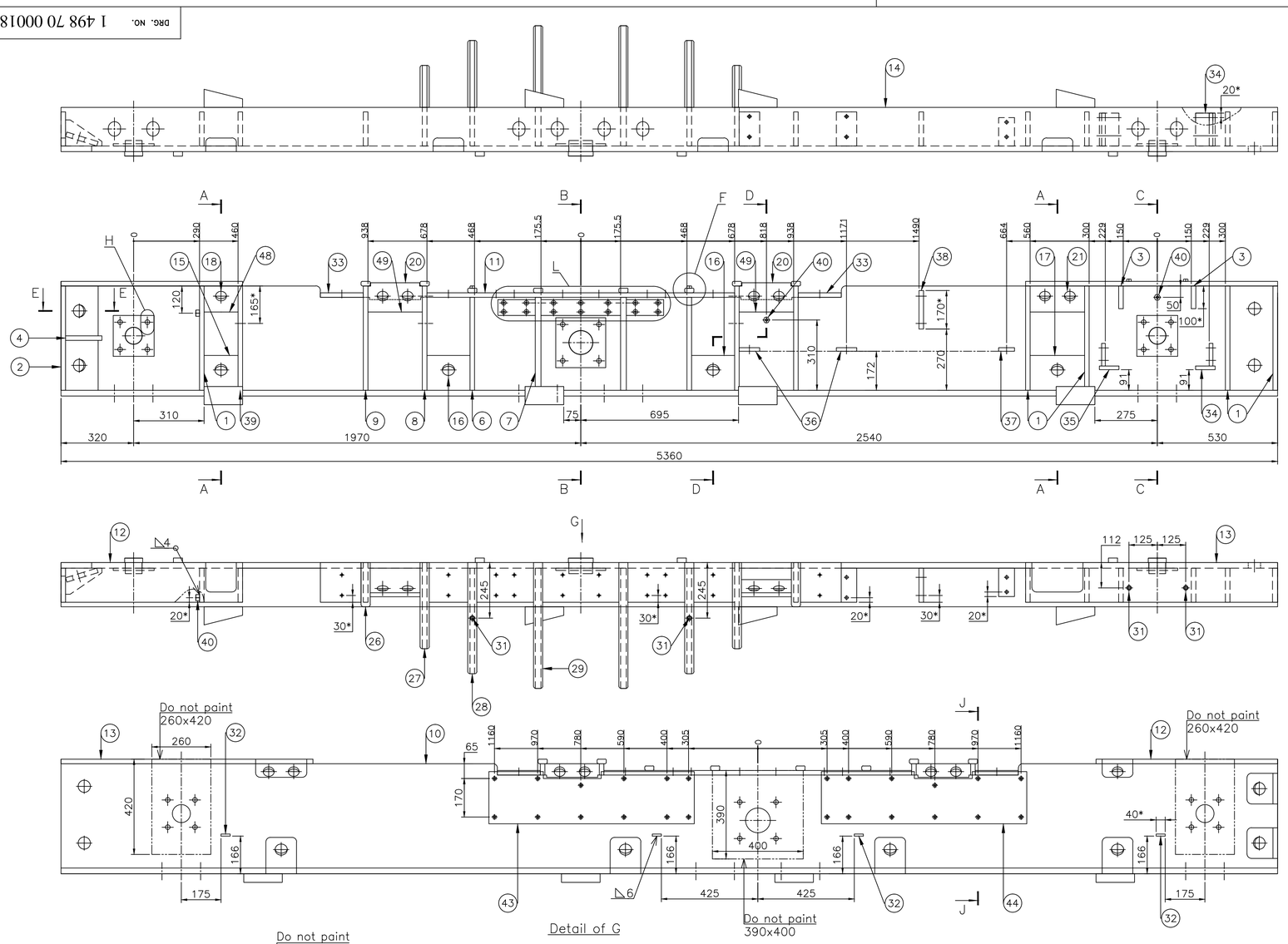

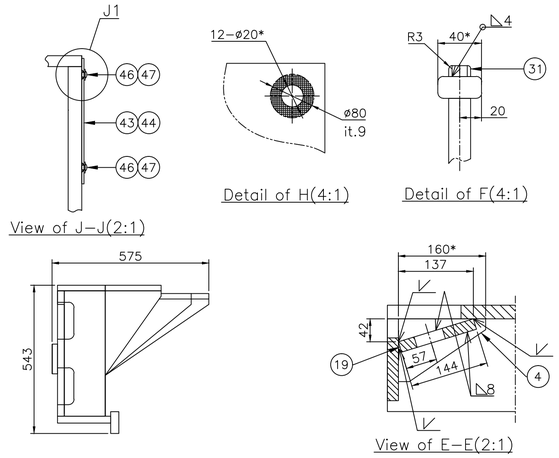

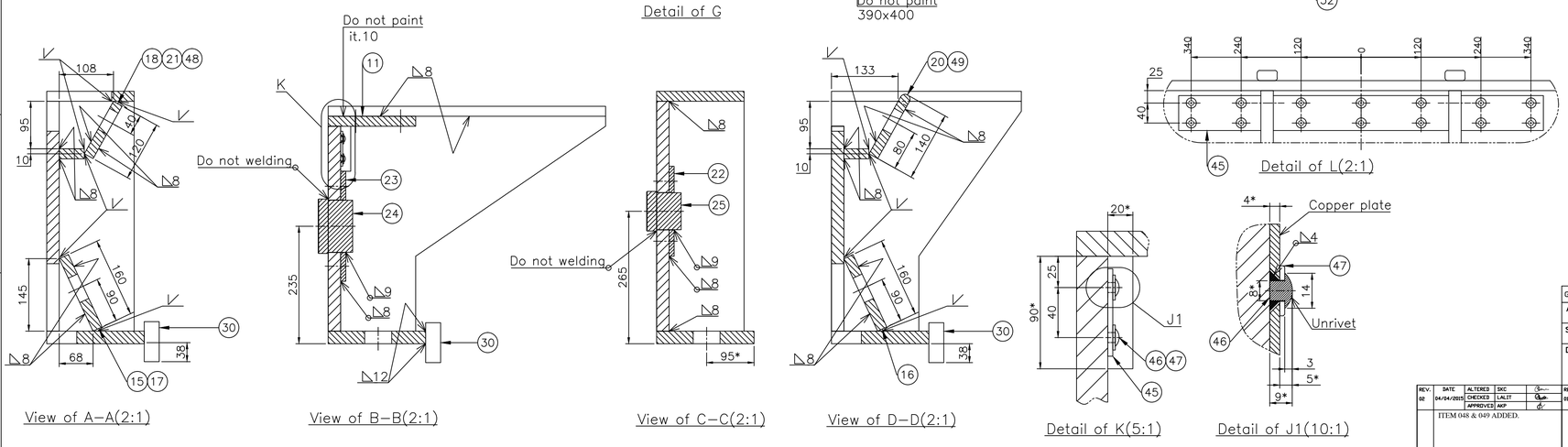

NOTES:-

1. FOR DELINKED BOM REFER COMPUTER BOM NO. 24987000022.
2. *REFERENCE DIMENSIONS.
3. ALL SHARP EDGES OF THE YOKE BEAM MAST BE ROUNDED.
4. WELDING OF LOW-MAGNETIC STEEL SHALL BE MADE BY STAINLESS ELECTRODE.
5. SURFACE COATING SHELL BE UNDER CUSTOMER TECHNOLOGICAL INSTRUCTION - OIL PROOF.
6. THE FACE SIDE OF THE GROUNDING PAD DO NOT PAINT.
7. ALL THE RIBS SHALL BE WELDED BY Δ 8.
8. ALL THE ANGLES SHALL BE WELDED BY Δ6.
9. ALL WELD SEAMS, WHICH ARE NOT SPECIFIED, SHALL BE WELDED BY Δ 8.
10. DO NOT PAINT AROUND THE HOLE WITH DIA.-20MM (12 HOLES). (DETAIL OF H)
11. DO NOT PAINT THE TOP FACE OF THE PLATE POS.11 AND POS.33.
12. DO NOT PAINT THE AREA ACCORDING TO (DETAIL OF G).
13. THE COPPER PLATES POS.43,44,45 SHALL BE UNRIVETED BY PIN POS.46. (SEE DETAIL OF J1).
14. INSTALLATION ORDER OF THE COPPER PLATE POS.45:
    -WELDING THE PINS POS.46 ON THE PLATE POS.10;
    -INSTALL THE COPPER PLATE TOGETHER WITH THE RIBS POS.7;
    -UNRIVET THE COPPER PLATE BY THE PINS POS.46 AFTER THE YOKE BEAM WILL BE WELDED.
15. THE REST OF UNSPECIFIED TECHNICAL REQUIREMENTS SHALL BE IN ACCORDANCE WITH NORMATIVE DOCUMENTS OF CUSTOMER.
16. ALL DIM. ARE **CRITICIAL** UNLESS OTHERWISE STATED.

QTY	NO.	NAME	MATERIAL	DWG. NO. & SPEC MATERIAL CODE	SIZE TxWxL	REMARK
3	49	plate	MS AA10740		20x50x240	
1	48	plate	MS AA10740		20x50x150	
38	47	Washer	MS AA10113	Part 34		
38	46	Pin	MS AA10112		ø8x11(+0,5)	
1	45	Plate	Copper	Part 33	4x70x730	
1	44	Plate	Copper	Part 32	4x230x905	
1	43	Plate	Copper	Part 31	4x230x905	
3	40	Grounding pad	SS AA10740	GPT.612001.2009		
1	39	Rib	SS AA10740	Part 28	20x150x460	
1	38	Plate	MS AA10108	Part 27	20x150x170	
1	37	Plate	MS AA10108	Part 26	16x70x125	
2	36	Plate	MS AA10108	Part 25	16x90x150	
1	35	Angle	MS AA10108	Part 24–01		
1	34	Angle	MS AA10108	Part 24		
2	33	Plate	SS AA10740	Part 23	20x175x189	
4	32	Plate	MS AA10108	Part 22	8x20x40	
4	31	Fixing pin	MS AA10112	Part 21	ø20x10	
4	30	Plate	MS AA10108	Part 20	80x80x170	
2	29	Plate	SS AA10740	Part 19–04	20x40xA	
2	28	Plate	SS AA10740	Part 19–03	20x40xA	
2	27	Plate	SS AA10740	Part 19–02	20x40xA	
2	26	Plate	SS AA10740	Part 19–01	20x40xA	
2	25	Lock pin	HTS AA10501	Part 18		
1	24	Lock pin	HTS AA10501	Part 17		
1	23	Plate	MS AA10108	Part 16	10x220x220	
2	22	Plate	MS AA10108	Part 15	10x180x180	
1	21	Plate	SS AA10740	Part 14	20x120x240	
2	20	Plate	SS AA10740	Part 13	20x140x240	
2	19	Plate	MS AA10108	Part 12–05	20xAxC	
1	18	Plate	MS AA10108	Part 12–04	20xAxC	
1	17	Plate	MS AA10108	Part 12–03	20xAxC	
2	16	Plate	MS AA10108	Part 12–02	20xAxC	
1	15	Plate	MS AA10108	Part 12–01	20xAxC	
1	14	Plate	MS AA10108	Part 11	25x195x5360	
1	13	Plate	SS AA10740	Part 10	20x175x1110	
1	12	Plate	MS AA10108	Part 9	20x175x800	
1	11	Plate	SS AA10740	Part 8	20x175x1356	
1	10	Plate	MS AA10108	Part 7	25x480x5360	
2	9	Rib	SS AA10740	Part 6	20x175x460	
2	8	Rib	SS AA10740	Part 5	20x380x460	
2	7	Rib	SS AA10740	Part 29	25x430x530	
2	6	Rib	SS AA10740	Part 4–01	TxAxB	
1	4	Rib	MS AA10108	Part 3–02	20xAxB	
2	3	Rib	SS AA10740	Part 3–01	20xAxB	
1	2	Rib	MS AA10108	Part 2	20x150x460	
5	1	Rib	SS AA10740	Part 1	20x150x460	

GPT ASSY. DRG. NO. GPT 612001.2000 | ITEM NO. 32 | GPT DRG. NO. GPT 612001.2050

ADDITIONAL INFORMATION: WO. NO.- 62007-A-512-01

STATUS OF DRAWING: U

DISTRIBUTION OF PRINTS: TRE-1, TRM-3, FTM-8

TYPE OF PRODUCT OR NAME OF CUSTOMER/PROJECT: 500 MVA, 765/400/33 KV 1 PHASE, AUTO TRANSFORMER MEGHA ENGG. & INFRA LTD. TRFR & REACTOR PKG FOR WUPPTCL

भारत हेवी इलेक्ट्रिकल्स लिमिटेड भोपल — BHARAT HEAVY ELECTRICALS LTD. BHOPAL

	ASSY. NAME	SIGN/DATE	दिनांक/DATE
तैयार किया PREPARED	SKC		30.04.14
जाँचा CHECKED	LALIT		05.05.14
स्वीकृत APPD	AKP		08.05.14

REV.	DATE	ALTERED	SKC
02	04/04/2015	CHECKED	LALIT
		APPROVED	AKP

ITEM 048 & 049 ADDED.

REV.	DATE	ALTERED	SKC
01	31/10/2014	CHECKED	LALIT
		APPROVED	AKP

DRG TITLE CHANGED. IT. 033 SIZE WAS 8X20X40 IN BOM. ON SHEET 2 IT. 014 UPDATED.

रिफरेंस DEPT. TRE | कोड CODE 406 | ऑर्डर/ TITLE: BOTTOM HV YOKE BEAM | SCALE | WEIGHT (KG) 1082 | REF. TO ASSY. DRG. 0 498 70 00002 | ITEM NO. 32 | ड्रॉइंग सं./DRAWING NO. 1 498 70 00018 | REV. 02 | पृष्ठ सं./SHT. No. 01 | पृष्ठों की संख्या/NO. OF SHT. 04

THE INFORMATION ON THIS DOCUMENT IS THE PROPERTY OF BHARAT HEAVY ELECTRICALS LIMITED
IT MUST NOT BE USED DIRECTLY OR INDIRECTLY IN ANY WAY DETRIMENTAL TO THE INTEREST OF THE COMPANY

INVENTORY NO. | SIGN. & DATE | REF. DRG. NO.

A3

FIRST ANGLE PROJECTION

(ALL DIMENSIONS ARE IN mm)

DRG. NO. 1 498 70 00018

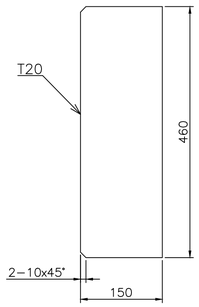

ITEM 01
10.9 KG

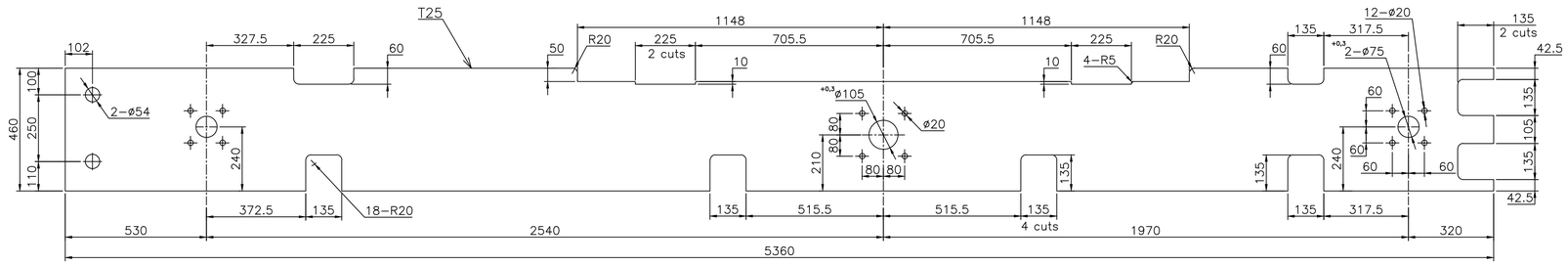

ITEM 10
431 KG

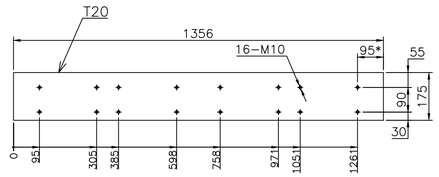

ITEM 11
37.1 KG

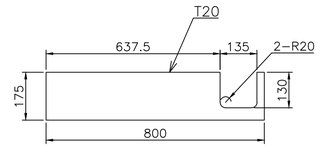

ITEM 12
19.3 KG

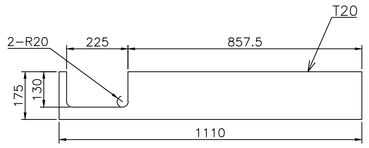

ITEM 13
26 KG

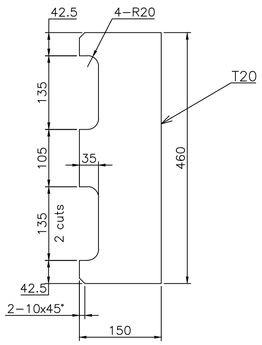

ITEM 02
9.4 KG

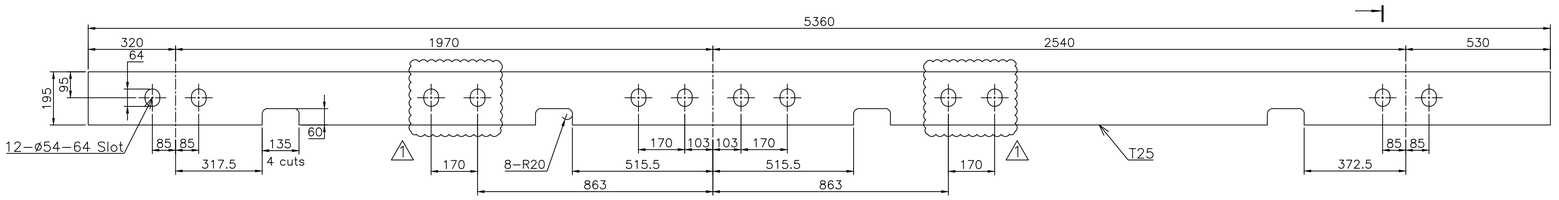

ITEM 14
196 KG

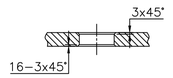

View of A–A(2:1)

A

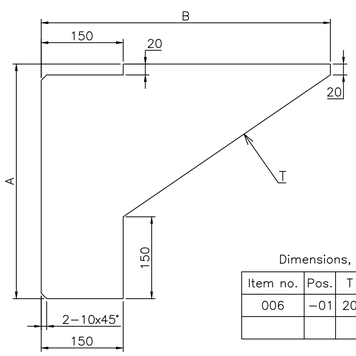

ITEM 06

Dimensions, mm

Item no.	Pos.	T	A	B	Mass,kg
006	–01	20	430	465	16,9

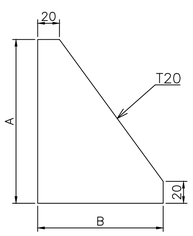

ITEM 03/04

Dimensions, mm

Item no	Pos.	A	B	Material	Mass,kg
003	–01	100	150	SS AA10740	1.54
004	–02	160	115	MS AA10108	1.85

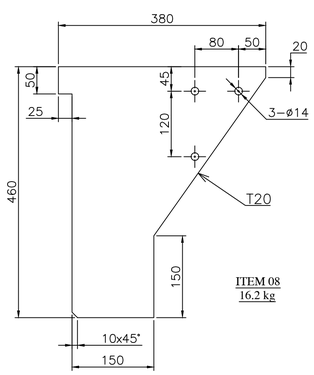

ITEM 08
16.2 kg

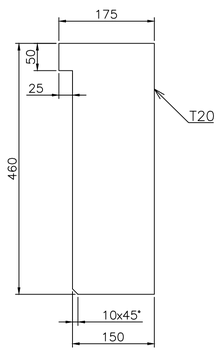

ITEM 9
11.1 kg

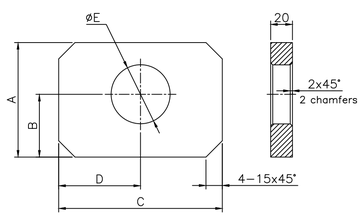

ITEM 15/16 /17/18 /19

Dimensions, mm

Item no.	Pos.	A	B	C	D	E	Mass,kg
015	–01	160	90	150	75	54	3.42
016	–02	160	90	190	95	54	4.42
017	–03	160	90	240	120	54	5.68
018	–04	120	40	150	75	48	2.47
019	–05	144	57	220	110	54	4.26

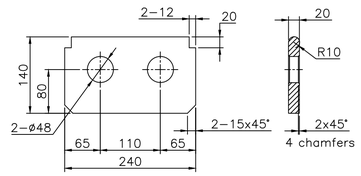

ITEM 20
4.56 KG

1. REMOVE ALL SHARP EDGES OF THE CUTS.

GPT ASSY. DRG. NO.	GPT 612001.2000	ITEM NO.	32	GPT DRG. NO.	GPT 612001.2050

ADDITIONAL INFORMATION
WO. NO.- 62007-A-512-01

STATUS OF DRAWING U

DISTRIBUTION OF PRINTS
TRE-1, TRM-3
FTM-8

उत्पाद का प्रकार या ग्राहक / परियोजना का नाम
TYPE OF PRODUCT OR NAME OF CUSTOMER/PROJECT

500 MVA, 765/400/33 KV 1 PHASE, AUTO TRANSFORMER
MEGHA ENGG. & INFRA LTD.
TRFR & REACTOR PKG FOR WUPPTCL

भारत हेवी इलेक्ट्रिकल्स लिमिटेड
भोपाल
BHARAT HEAVY ELECTRICALS LTD.
BHOPAL

	नाम/ NAME	हस्ताक्षर/ SIGN	दिनांक/DATE	ड्रा. की संख्या NO. OF DWG
अंकित/ DRN	SKC		30.04.14	
जाँचा/ CHK	LALIT		05.05.14	
स्वीकृत/ APPD	AKP		08.05.14	–

REV.	DATE	ALTERED SKC	
02	04/04/2015	CHECKED LALIT	
		APPROVED AKP	

SHEET NO. 01 REVISED.

REV.	DATE	ALTERED SKC	
01	21/10/2014	CHECKED LALIT	
		APPROVED AKP	

DRG TITLE CHANGED.
IT. 033 SIZE WAS 8X20X40 IN BOM.
IT. 014 UPDATED.

विभाग/ DEPT. TRE
कोड/ CODE 406
अनु./ UNTOL. DIMS. GR. –
SCALE
भार/ WEIGHT KGS. 1082
ड्रा./ दृष्टांत का हैडर्स REF. TO ASSY. DRG. 0 498 70 00002
मद सं. ITEM NO. 32
मद कैसा NO. OF ITEM –

शीर्षक/ TITLE
BOTTOM HV YOKE BEAM

ड्रा./ DRAWING NO. 1 498 70 00018
पुनः/REV. 02
पृष्ठ सं./SHT. No. 02 पृष्ठों की संख्या/NO. OF SHT. 04

THE INFORMATION ON THIS DOCUMENT IS THE PROPERTY OF BHARAT HEAVY ELECTRICALS LIMITED
IT MUST NOT BE USED DIRECTLY OR INDIRECTLY IN ANY WAY DETRIMENTAL TO THE INTEREST OF THE COMPANY

INVENTORY NO. | SIGN. & DATE | REF. DRG. NO.

FIRST ANGLE PROJECTION

(ALL DIMENSIONS ARE IN mm)

DRG. NO. 1 498 70 00018

THE INFORMATION ON THIS DOCUMENT IS THE PROPERTY OF BHARAT HEAVY ELECTRICALS LIMITED
IT MUST NOT BE USED DIRECTLY OR INDIRECTLY IN ANY WAY DETRIMENTAL TO THE INTEREST OF THE COMPANY

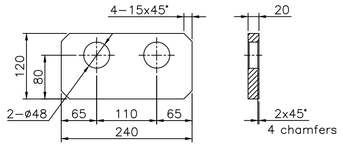

ITEM 21
3.81 kg

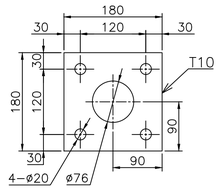

ITEM 22
2.1 KG

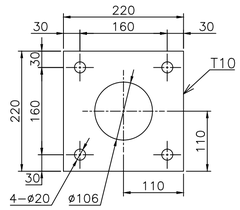

ITEM 23
3.02 KG

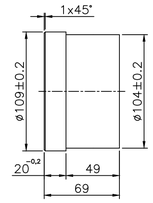

ITEM 24
4.74 KG

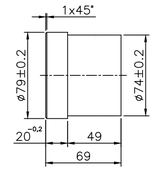

ITEM 25
2.43 KG

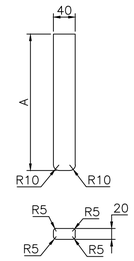

ITEM 26/27/28/29

Dimensions, mm

Item no.	Pos.	A	Mass,kg
026	–01	195	1.22
027	–02	380	2.42
028	–03	490	3.11
029	–04	555	3.49

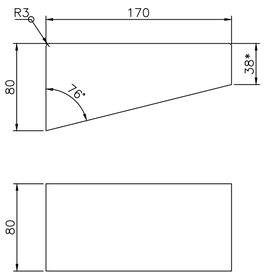

ITEM 30
6.3 kg

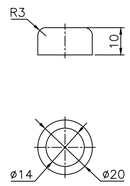

ITEM 31
0.01 kg

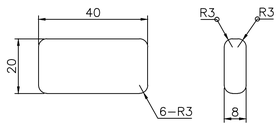

ITEM 32
0.56 kg

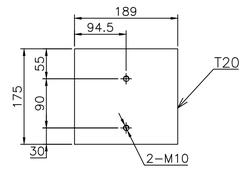

ITEM 33
5.2 kg

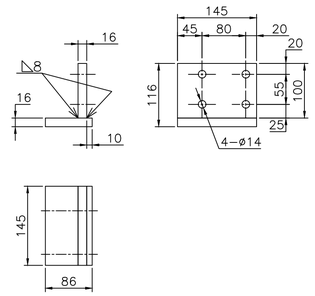

ITEM 34
3.39 kg

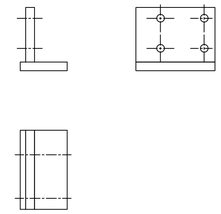

ITEM 35
3.39 kg

Mirror reflection of Part.24

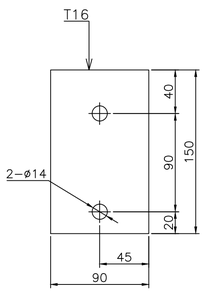

ITEM 36
1.69 kg

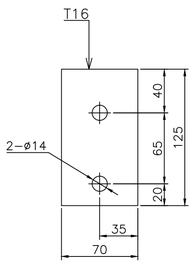

ITEM 37
1.10 kg

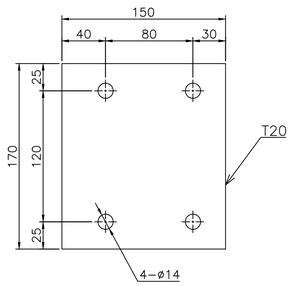

ITEM 38
4.01 kg

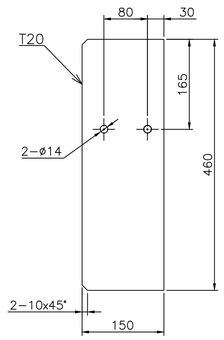

ITEM 39
10.9 kg

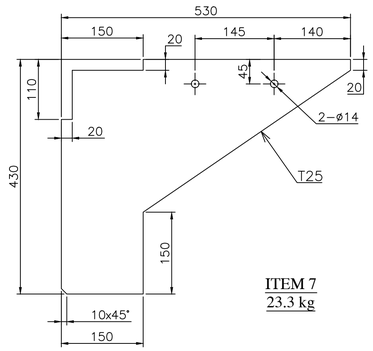

ITEM 7
23.3 kg

GPT ASSY. DRG. NO.	GPT 612001.2000	ITEM NO.	32	GPT DRG. NO.	GPT 612001.2050

ADDITIONAL INFORMATION
WO. NO.- 62007-A-512-01

STATUS OF DRAWING U

DISTRIBUTION OF PRINTS
TRE-1, TRM-3
FTM-8

उत्पाद का प्रकार या ग्राहक /परियोजना का नाम
TYPE OF PRODUCT OR NAME OF CUSTOMER/PROJECT
500 MVA, 765/400/33 KV 1 PHASE, AUTO TRANSFORMER
MEGHA ENGG. & INFRA LTD.
TRFR & REACTOR PKG FOR WUPPTCL

भारत हेवी इलेक्ट्रिकल्स लिमिटेड भोपाल
BHARAT HEAVY ELECTRICALS LTD. BHOPAL

	नाम/ NAME	हस्ताक्षर/ SIGN.	दिनांक/DATE	ड्रा. की डिजाइन NO. OF VAR
डिज़ाइन DSN	SKC		30.04.14	
जांचा CHK	LALIT		05.05.14	
स्वीकृत APPD	AKP		08.05.14	–

REV.	DATE	ALTERED	SKC	
02	04/04/2015	CHECKED	LALIT	
		APPROVED	AKP	

SHEET NO. REVISED

REV.	DATE	ALTERED	SKC	
01	31/10/09	CHECKED	LALIT	
		APPROVED	AKP	

DRG TITLE CHANGED.
IT. 033 SIZE WAS 8X20X40 IN BOM.
ON SHEET 2 IT. 014 UPDATED

विभाग DEPT. TRE | उप. इंजि. कार्य की देखरेख UNTDL. DWG. SR. | SCALE | अनुपात | मात्र. शीट.SHT. WEIGHT SCAL. 1082

कोड CODE 406 | –

शीर्षक/ TITLE
BOTTOM HV YOKE BEAM

ड्राईंग सं./DRAWING NO.
1 498 70 00018

उच्च स्तर ड्राईंग सं. REF. TO ASSY. DRG.
0 498 70 00002

मद सं. ITEM NO. 32 | मद सं. कुल NO. OF ITEM –

पृष्ठ/REV. 02

पृष्ठ सं./SHT. No. 03 पृष्ठों की संख्या/NO. OF SHT. 04

INVENTORY NO. | SIGN. & DATE | REF. DRG. NO.

FIRST ANGLE PROJECTION

(ALL DIMENSIONS ARE IN mm)

DRG. NO. 1 498 70 00018

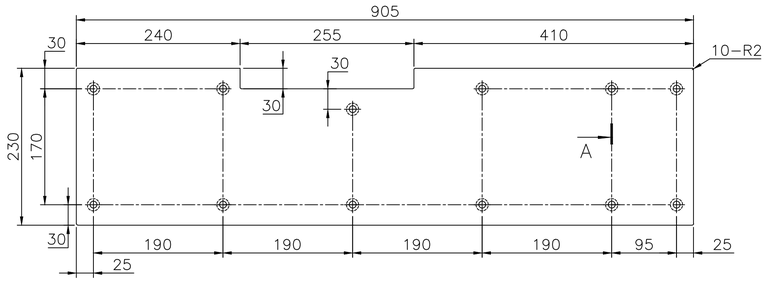

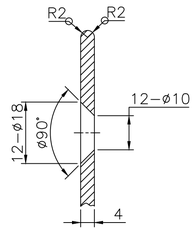

View of A–A(10:1)

ITEM 43
7.1 kg
1.Round with 2mm radius

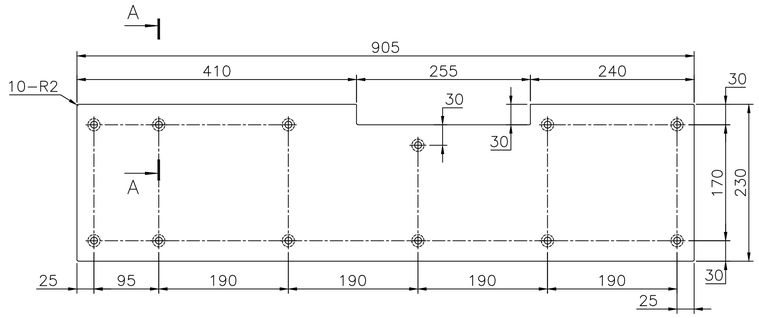

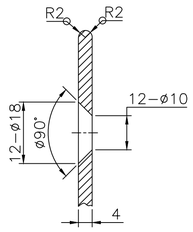

View of A–A(10:1)

ITEM 44
7.1 kg
1.Round with 2mm radius

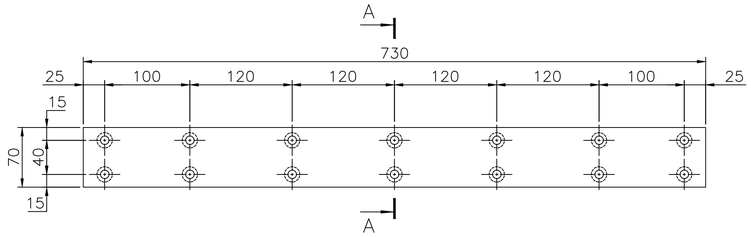

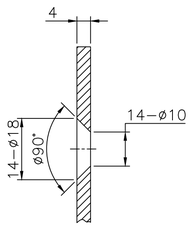

View of A–A(10:1)

ITEM 45
1.7 kg

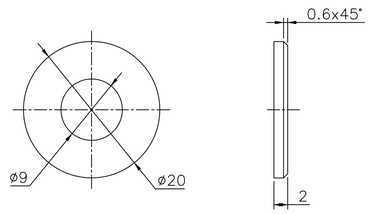

ITEM 47
.004 kg

THE INFORMATION ON THIS DOCUMENT IS THE PROPERTY OF BHARAT HEAVY ELECTRICALS LIMITED
IT MUST NOT BE USED DIRECTLY OR INDIRECTLY IN ANY WAY DETRIMENTAL TO THE INTEREST OF THE COMPANY

INVENTORY NO. | SIGN. & DATE | REF. DRG. NO.

GPT ASSY. DRG. NO.	GPT 612001.2000	ITEM NO.	32	GPT DRG. NO.	GPT 612001.2050

ADDITIONAL INFORMATION
WO. NO.- 62007-A-512-01

STATUS OF DRAWING U

DISTRIBUTION OF PRINTS
TRE-1, TRM-3
FTM-8

उत्पाद का प्रकार या ग्राहक / परियोजना का नाम
TYPE OF PRODUCT OR NAME OF CUSTOMER/PROJECT
500 MVA, 765/400/33 KV 1 PHASE, AUTO TRANSFORMER
MEGHA ENGG. & INFRA LTD.
TRFR & REACTOR PKG FOR WUPPTCL

भारत हेवी इलेक्ट्रिकल्स लिमिटेड भोपाल
BHARAT HEAVY ELECTRICALS LTD. BHOPAL

	नाम/ NAME	हस्ताक्षर/ SIGN	दिनांक/DATE	ड्रै. सं. की वैधता NO. OF VAR
बनाया DRN	SKC		30.04.14	
जाँचा CHK	LALIT		05.05.14	
स्वीकृत APPD	AKP		08.05.14	–

विभाग DEPT. TRE
ग्रुप GROUP 406
उप. एवं. सम्प. की वेबसाइट UNITD. DWG. GR. –
अनुपात SCALE
भार WEIGHT (KG) 1082
उप. दृष्टि सं. का संदर्भ REF. TO ASSY. DWG. 0 498 70 00002
मद सं. ITEM NO. 32
मद वैधता NO. OF ITEM –

REV.	DATE	ALTERED	SKC
02	04/04/2015	CHECKED	LALIT
		APPROVED	AKP

SHEET NO. 01 REVISED

REV.	DATE	ALTERED	SKC
01	31/10/2014	CHECKED	LALIT
		APPROVED	AKP

DRG TITLE CHANGED.
IT. 033 SIZE WAS 8X20X40 IN BOM.
ON SHEET 2 IT. 014 UPDATED

शीर्षक/ TITLE
BOTTOM HV YOKE BEAM

दृष्टि सं./DRAWING NO. 1 498 70 00018

पृष्ठ/REV. 02

पृष्ठ सं./SHT. No. 04 पृष्ठों की संख्या/NO. OF SHT. 04

BILL OF MATERIAL	DEP NO	NO OF IT	NO OF VAR	TYPE OF PRODUCT	WORKORDER	DRG NO	CORE CODE	REV
		50	1	500MVA,765KV,1PH. MEGA	62007A51201	14987000019	65170703	02
					TITLE: BOTTOM END FRAME L.V.SIDE BOTTOM END FRA			SHT NO 1 OF 4

DU	VAR03	VAR02	VAR01	VAR00	REMARKS	IT NO	DESCRIPTION / MAT SIZE	TK	WDT	LEN	ID	OD	DIM1	DRAWING NO / DETAILS	IT. VAR	MATCODE / MAT SPEC	A/C	UT	UNIT WT / QTY	G/S / ZONE
				00004	PART 1 TO DETAIL	001	RIB	20	150	460						AA10740		KG	10.900	
				00001	PART 2 TO DETAIL	002	RIB	20	150	460						AA10108		KG	9.400	
				00002	PART 3-01 TO DETAIL	003	RIB	20	100	150						AA10740		KG	1.540	
				00002	PART 3-02 TO DETAIL	004	RIB	20	160	115						AA10108		KG	1.850	
				00001	PART 3-03 TO DETAIL	005	RIB	20	180	70						AA10108		KG	1.350	
				00002	PART 4-01 TO DETAIL	006	RIB	20	430	465						AA10740		KG	16.900	
				00002	PART 5 TO DETAIL	008	RIB	20	380	460						AA10740		KG	16.200	
				00002	PART 6 TO DETAIL	009	RIB	20	175	460						AA10740		KG	11.100	
				00001	PART 7 TO DETAIL	010	PLATE	25	460	5360						AA10108		KG	431.000	
				00001	PART 8 TO DETAIL	011	PLATE	20	175	1356						AA10740		KG	37.100	
				00001	PART 9 TO DETAIL	012	PLATE	20	175	800						AA10108		KG	19.300	
				00001	PART 10 TO DETAIL	013	PLATE	20	175	1110						AA10740		KG	26.000	

DISTRIBUTION DETAILS					REV NO. 2	PREP BY	CKD BY	APPD BY	DATE 03 APR 2015
TRE	TRM				PREP BY	CKD BY	APPD BY	DATE	
1	3				KVA	LK	AKP	24 APR 2014	DRG NO 14987000019 SHT 1 OF 4

BILL OF MATERIAL	DEP NO	NO OF IT	NO OF VAR	TYPE OF PRODUCT	WORKORDER	DRG NO	CORE CODE	REV
		50	1	500MVA,765KV,1PH. MEGA	62007A51201	14987000019	65170703	02
					TITLE: BOTTOM END FRAME L.V.SIDE BOTTOM END FRA			SHT NO 2 OF 4

DU	VAR03	VAR02	VAR01	VAR00	REMARKS	IT NO	DESCRIPTION / MAT SIZE	TK	WDT	LEN	ID	OD	DIM1	DRAWING NO / DETAILS	IT.	MATCODE / MAT SPEC	A/C	UT	UNIT WT / QTY	G/S / ZONE
				00001	PART 11 TO DETAIL	014	PLATE	25	195	5360						AA10108		KG	196.000	
				00001	PART 12-01 TO DETAIL	015	PLATE	20	160	150						AA10108		KG	3.420	
				00002	PART 12-02 TO DETAIL	016	PLATE	20	160	190						AA10108		KG	4.420	
				00001	PART 12-03 TO DETAIL	017	PLATE	20	160	240						AA10108		KG	5.680	
				00001	PART 12-04 TO DETAIL	018	PLATE	20	120	150						AA10108		KG	2.470	
				00002	PART 12-05 TO DETAIL	019	PLATE	20	144	220						AA10108		KG	4.260	
				00002	PART.13 TO DETAIL	020	PLATE	20	140	240						AA10740		KG	4.560	
				00001	PART.14 TO DETAIL	021	PLATE	20	120	240						AA10740		KG	3.810	
				00002	PART.15 TO DETAIL	022	PLATE	10	180	180						AA10108		KG	2.100	
				00001	PART 16 TO DETAIL	023	PLATE	10	220	220						AA10108		KG	3.020	
				00001	PART 17	024	LOCK PIN									AA10501		KG	4.740	
				00002	PART 18 TO DETAIL	025	LOCK PIN									AA10501		KG	2.430	

DISTRIBUTION DETAILS					REV NO. 2	PREP BY	CKD BY	APPD BY	DATE 03 APR 2015
TRE	TRM				PREP BY	CKD BY	APPD BY	DATE	
1	3				KVA	LK	AKP	24 APR 2014	DRG NO 14987000019 SHT 2 OF 4

BILL OF MATERIAL	DEP NO	NO OF IT	NO OF VAR	TYPE OF PRODUCT	WORKORDER	DRG NO	CORE CODE	REV
		50	1	500MVA,765KV,1PH. MEGA	62007A51201	14987000019	65170703	02
					TITLE: BOTTOM END FRAME L.V.SIDE BOTTOM END FRA			SHT NO 3 OF 4

DU	VAR03	VAR02	VAR01	VAR00	REMARKS	IT NO	DESCRIPTION / MAT SIZE	TK	WDT	LEN	ID	OD	DIM1	DRAWING NO / DETAILS	IT.	MATCODE / MAT SPEC	A/C	UT	UNIT WT / QTY	G/S / ZONE
				00002	PART 19-01 TO DETAIL	026	PLATE	20	40	195						AA10740		KG	1.220	
				00002	PART 19-02 TO DETAIL	027	PLATE	20	40	380						AA10740		KG	2.420	
				00002	PART.9-03 TO DETAIL	028	PLATE	20	40	490						AA10740		KG	3.110	
				00002	PART 19-04 TO DETAIL	029	PLATE	20	40	555						AA10740		KG	3.490	
				00004	PART 20 TO DETAIL	030	PLATE	80	80	170						AA10108		KG	6.300	
				00004	PART 21 DIA 20x10	031	FIXING PIN	10								AA10112		KG	0.010	
				00004	PART 22 TO DETAIL	032	PLATE	8	20	40						AA10108		KG	0.056	
				00002	PART 23 TO DETAIL	033	PLATE	20	175	189						AA10740		KG	5.200	
				00002	GPT.612001.2009 TO DETAIL	034	GROUNDING PAD							44987000029		AA10740		KG		
				00002	PART.24 TO DETAIL	035	ANGLE									AA10108		KG	3.490	
				00001	PART 25	036	PLATE	16	100	150						AA10108		KG	1.890	
				00001		037	PLATE	16	150	280						AA10108		KG	3.390	

DISTRIBUTION DETAILS					REV NO. 2	PREP BY	CKD BY	APPD BY	DATE 03 APR 2015
TRE	TRM				PREP BY	CKD BY	APPD BY	DATE	
1	3				KVA	LK	AKP	24 APR 2014	DRG NO 14987000019 SHT 3 OF 4

BILL OF MATERIAL	DEP NO	NO OF IT	NO OF VAR	TYPE OF PRODUCT	WORKORDER	DRG NO	CORE CODE	REV
		50	1	500MVA,765KV,1PH. MEGA	62007A51201	14987000019	65170703	02
					TITLE: BOTTOM END FRAME L.V.SIDE BOTTOM END FRA			SHT NO 4 OF 4

DU	VAR03	VAR02	VAR01	VAR00	REMARKS	IT NO	DESCRIPTION / MAT SIZE	TK	WDT	LEN	ID	OD	DIM1	DRAWING NO / DETAILS	IT.	MATCODE / MAT SPEC	A/C	UT	UNIT WT / QTY	G/S / ZONE
				00001	PART 26	038	RIB	20	150	460						AA10740		KG	10.900	
				00002	PART 27	039	RIB	25	430	530						AA10740		KG	23.300	
				00001	PART 28	040	RIB	20	150	170						AA10108		KG	4.010	
				00001	PART 29	041	RIB	20	150	460						AA10740		KG	10.900	
				00001	PART 30	042	PLATE	16	60	115						AA10108		KG	0.860	
				00001	PART 32	044	COPPER PLATE	4	230	905						AA12003		KG	7.100	
				00001	PART 33	045	COPPER PLATE	4	230	905						AA12003		KG	1.700	
				00001	PART 35	046	COPPER PLATE	4	70	730						AA12003		KG	7.100	
				00038	DIA. 8x11(+0,5)	047	PIN									AA10112		KG	0.004	
				00038	PART 34	048	WASHER									AA10113		KG	0.004	
				00001		049	PLATE	20	50	150						AA10740		KG	1.180	
				00003		050	PLATE	20	50	240						AA10740		KG	1.880	

1082.5

DISTRIBUTION DETAILS					REV NO. 2	PREP BY	CKD BY	APPD BY	DATE 03 APR 2015
TRE	TRM				PREP BY	CKD BY	APPD BY	DATE	
1	3				KVA	LK	AKP	24 APR 2014	DRG NO 14987000019 SHT 4 OF 4

FIRST ANGLE PROJECTION

(ALL DIMENSIONS ARE IN mm)

DRG. NO. 1 498 70 00019

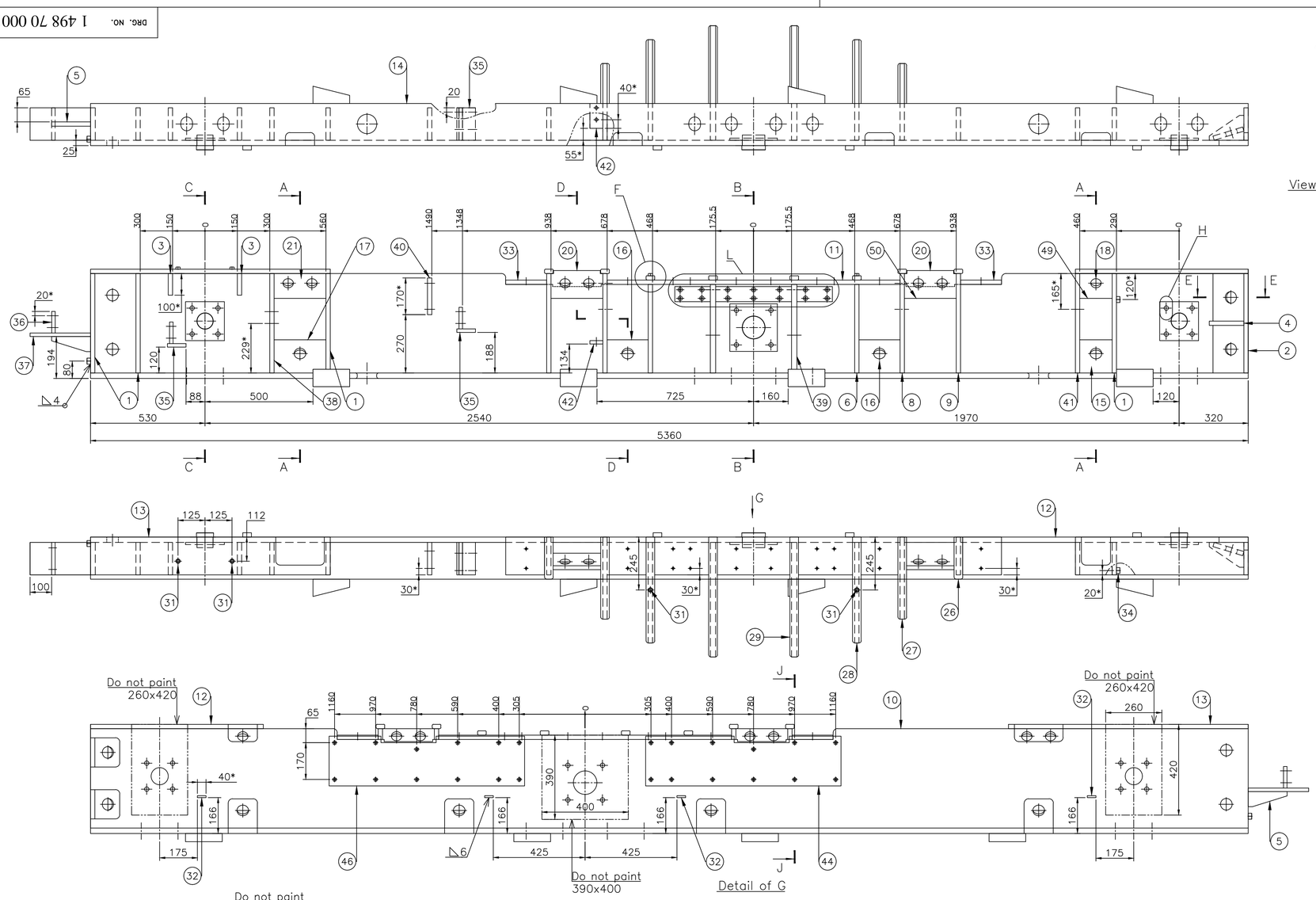

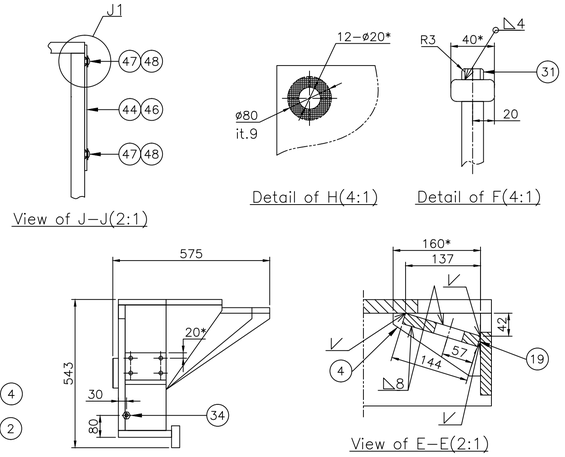

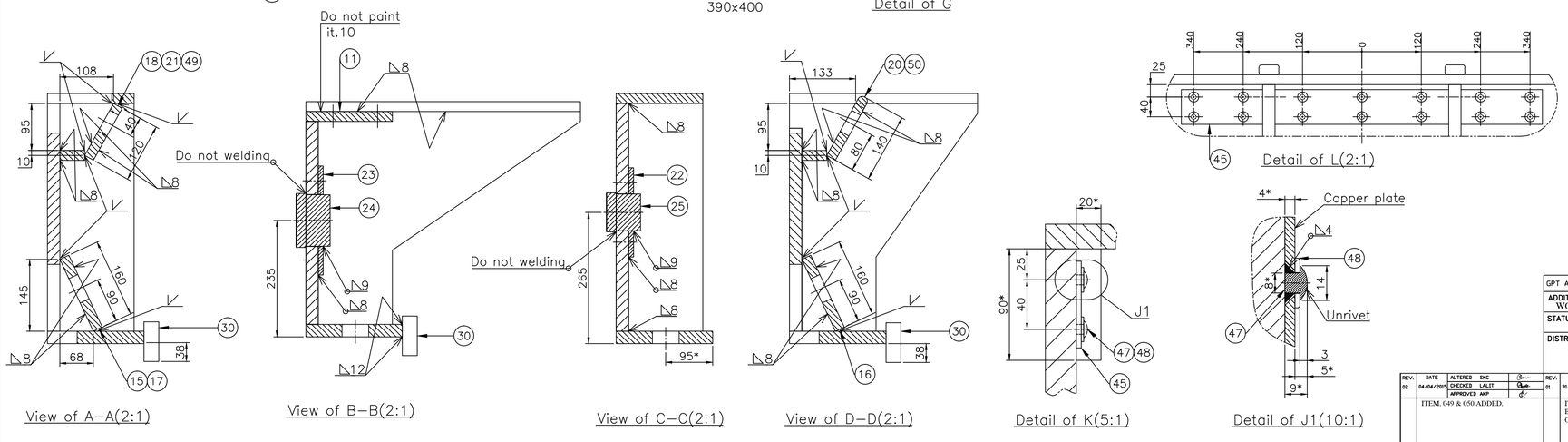

NOTES:-

1. FOR DELINKED BOM REFER COMPUTER BOM NO. 14987000019.
2. *REFERENCE DIMENSIONS.
3. ALL SHARP EDGES OF THE YOKE BEAM MAST BE ROUNDED.
4. WELDING OF LOW-MAGNETIC STEEL SHALL BE MADE BY STAINLESS ELECTRODE.
5. SURFACE COATING SHELL BE UNDER CUSTOMER TECHNOLOGICAL INSTRUCTION - OIL PROOF.
6. THE FACE SIDE OF THE GROUNDING PAD DO NOT PAINT.
7. ALL THE RIBS SHALL BE WELDED BY Δ 8.
8. ALL THE ANGLES SHALL BE WELDED BY ⌒6.
9. ALL WELD SEAMS, WHICH ARE NOT SPECIFIED, SHALL BE WELDED BY Δ 8.
10. DO NOT PAINT AROUND THE HOLE WITH DIA.-20MM (12 HOLES). (DETAIL OF H)
11. DO NOT PAINT THE TOP FACE OF THE PLATE POS.11 AND POS.33.
12. DO NOT PAINT THE AREA ACCORDING TO (DETAIL OF G).
13. THE COPPER PLATES POS.44,45,46 SHALL BE UNRIVETED BY PIN POS.47. (SEE DETAIL OF J1).
14. INSTALLATION ORDER OF THE COPPER PLATE POS.45:
    -WELDING THE PINS POS.47 ON THE PLATE POS.10;
    -INSTALL THE COPPER PLATE TOGETHER WITH THE RIBS POS.39;
    -UNRIVET THE COPPER PLATE BY THE PINS POS.47 AFTER THE YOKE BEAM WILL BE WELDED.
15. THE REST OF UNSPECIFIED TECHNICAL REQUIREMENTS SHALL BE IN ACCORDANCE WITH NORMATIVE DOCUMENTS OF CUSTOMER.

QTY	NO.	NAME	MATERIAL	DWG. NO. & SPEC MATERIAL CODE	SIZE TxWxL	REMARK
3	50	plate	MS AA10740		20x50x240	
	49	plate	MS AA10740		20x50x150	
38	48	Washer	MS AA10113	Part 34		
38	47	Pin	MS AA10112		ø8x11(+0,5)	
1	46	Plate	Copper	Part 35	4x70x730	
1	45	Plate	Copper	Part 33	4x230x905	
1	44	Plate	Copper	Part 32	4x230x905	
1	42	Plate	MS AA10108	Part 30	16x60x115	
1	41	Rib	SS AA10740	Part 29	20x150x460	
1	40	Rib	MS AA10108	Part 28	20x150x170	
2	39	Rib	SS AA10740	Part 27	25x430x530	
1	38	Rib	SS AA10740	Part 26	20x150x460	
1	37	Plate	MS AA10108		16x150x280	3,39kg
1	36	Plate	MS AA10108	Part 25	16x100x150	
2	35	Angle	MS AA10108	Part 24		
2	34	Grounding pad	SS AA10740	GPT.612001.2009		
2	33	Plate	SS AA10740	Part 23	20x175x189	
4	32	Plate	MS AA10108	Part 22	8x20x40	
4	31	Fixing pin	MS AA10112	Part 21	ø20x10	
4	30	Plate	MS AA10108	Part 20	80x80x170	
2	29	Plate	SS AA10740	Part 19–04	20x40xA	
2	28	Plate	SS AA10740	Part 19–03	20x40xA	
2	27	Plate	SS AA10740	Part 19–02	20x40xA	
2	26	Plate	SS AA10740	Part 19–01	20x40xA	
2	25	Lock pin	HTS AA10501	Part 18		
1	24	Lock pin	HTS AA10501	Part 17		
1	23	Plate	MS AA10108	Part 16	10x220x220	
2	22	Plate	MS AA10108	Part 15	10x180x180	
1	21	Plate	SS AA10740	Part 14	20x120x240	
2	20	Plate	SS AA10740	Part 13	20x140x240	
2	19	Plate	MS AA10108	Part 12–05	20xAxC	
1	18	Plate	MS AA10108	Part 12–04	20xAxC	
1	17	Plate	MS AA10108	Part 12–03	20xAxC	
2	16	Plate	MS AA10108	Part 12–02	20xAxC	
1	15	Plate	MS AA10108	Part 12–01	20xAxC	
1	14	Plate	MS AA10108	Part 11	25x195x5360	
1	13	Plate	SS AA10740	Part 10	20x175x1110	
1	12	Plate	MS AA10108	Part 9	20x175x800	
1	11	Plate	SS AA10740	Part 8	20x175x1356	
1	10	Plate	MS AA10108	Part 7	25x430x5360	
2	9	Rib	SS AA10740	Part 6	20x175x460	
2	8	Rib	SS AA10740	Part 5	20x380x460	
2	6	Rib	SS AA10740	Part 4–01	TxAxB	
1	5	Rib	MS AA10108	Part 3–03	20xAxB	
1	4	Rib	MS AA10108	Part 3–02	20xAxB	
2	3	Rib	SS AA10740	Part 3–01	20xAxB	
1	2	Rib	MS AA10108	Part 2	20x150x460	
4	1	Rib	SS AA10740	Part 1	20x150x460	

GPT ASSY. DRG. NO.	GPT 612001.2000	ITEM NO. 33	GPT DRG. NO. GPT 612001.2060

ADDITIONAL INFORMATION
WO. NO.- 62007-A-512-01

STATUS OF DRAWING U

DISTRIBUTION OF PRINTS
TRE-1, TRM-3
FTM-8

उत्पाद का प्रकार या ग्राहक / परियोजना का नाम
TYPE OF PRODUCT OR NAME OF CUSTOMER/PROJECT

500 MVA, 765/400/33 KV 1 PHASE, AUTO TRANSFORMER
MEGHA ENGG. & INFRA LTD.
TRFR & REACTOR PKG FOR WUPPTCL

भारत हेवी इलेक्ट्रिकल्स लिमिटेड
भोपाल
BHARAT HEAVY ELECTRICALS LTD.
BHOPAL

	नाम/ NAME	हस्ताक्षर/ SIGN	दिनांक/DATE
बनाया/ DRAWN	SKC		30.04.14
देखा/ CHKD.	LALIT		05.05.14
स्वीकृत अप्रवे/ APPD.	AKP		08.05.14

REV.	DATE	ALTERED	CHECKED	APPROVED
02	04/04/2015	SKC	LALIT	AKP
01	21/10/2014	SKC	LALIT	AKP

ITEM. 049 & 050 ADDED.

IT. 033 SIZE WAS 8X20X40 IN BOM. IT. 014 TK WAS 20 IN BOM. ON SHEET 2 IT. 014 UPDATED.

विभाग/ DEPT. TRE	अंक, दृश्य, मापा की तेरहों UNTOL. DIMS. OK.			
शीट/ SHEET 406	–			
CODE				

अनुपात SCALE	भार/ वैइट WEIGHT KGS. 1074	उत्पाद, दृश्य का संदर्भ REF. TO ASSY. DRG. 0 498 70 00002	मद सं. ITEM NO. 33
			कुल मदों NO. OF ITEM –

शीर्षक/ TITLE
BOTTOM LV YOKE BEAM

दृश्य सं./DRAWING NO.
1 498 70 00019

पुनः/REV 02

पृष्ठ सं./SHT. No. 01 पृष्ठों की संख्या/NO. OF SHT. 04

THE INFORMATION ON THIS DOCUMENT IS THE PROPERTY OF BHARAT HEAVY ELECTRICALS LIMITED
IT MUST NOT BE USED DIRECTLY OR INDIRECTLY IN ANY WAY DETRIMENTAL TO THE INTEREST OF THE COMPANY

REF. DRG. NO.

SIGN. & DATE

INVENTORY NO.

FIRST ANGLE PROJECTION

(ALL DIMENSIONS ARE IN mm)

DRG. NO. 1 498 70 00019

THE INFORMATION ON THIS DOCUMENT IS THE PROPERTY OF BHARAT HEAVY ELECTRICALS LIMITED
IT MUST NOT BE USED DIRECTLY OR INDIRECTLY IN ANY WAY DETRIMENTAL TO THE INTEREST OF THE COMPANY

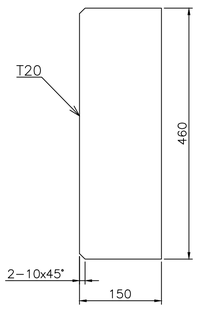

ITEM 01
10.9 KG

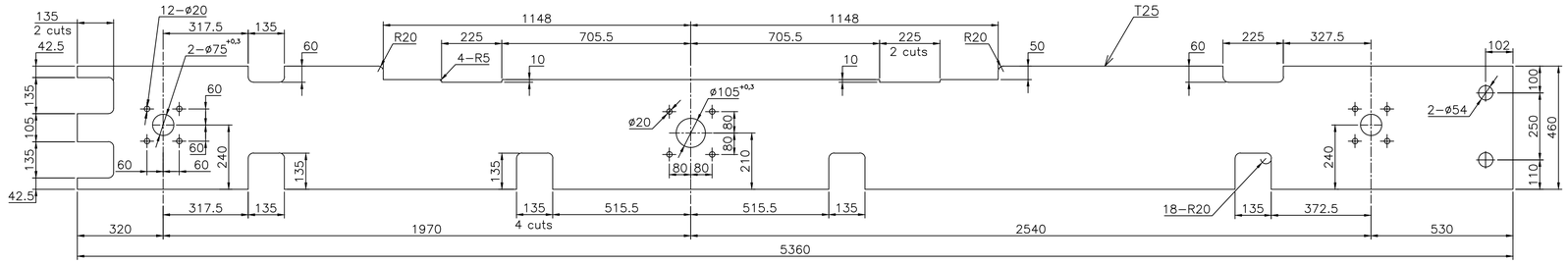

ITEM 10
431 KG

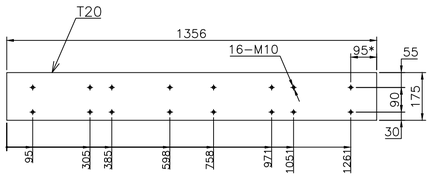

ITEM 11
37.1 KG

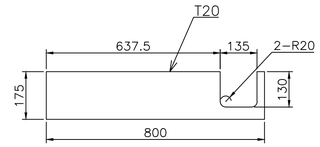

1.Remove all sharp edges of the cuts.

ITEM 14
19.3 KG

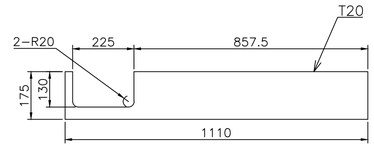

1.Remove all sharp edges of the cuts.

ITEM 13
26 KG

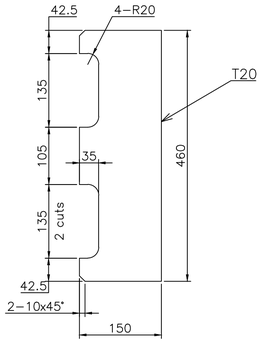

ITEM 02
9.4 KG

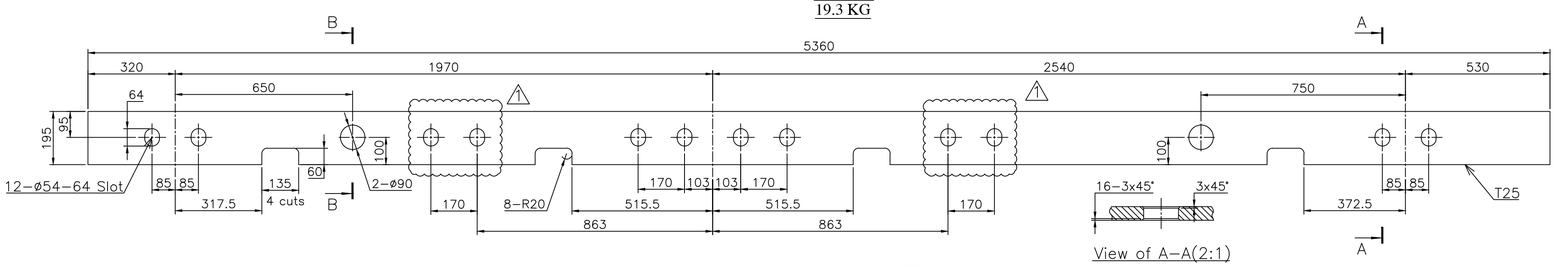

ITEM 14
196 KG

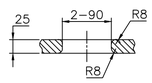

View of B–B

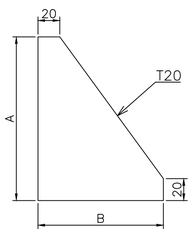

ITEM 03/04 /05

Dimensions, mm

Item no.	Pos.	A	B	Material	Mass,kg
003	–01	100	150	SS AA10740	1.54
004	–02	160	115	MS AA10108	1.85
005	–03	180	70	MS AA10108	1.35

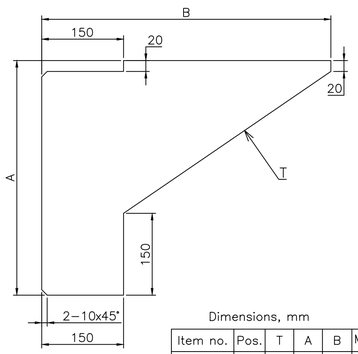

Dimensions, mm

Item no.	Pos.	T	A	B	Mass,kg
001	–01	20	430	465	16,9

ITEM 6
37.1 KG

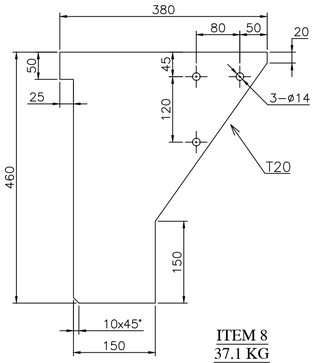

ITEM 8
37.1 KG

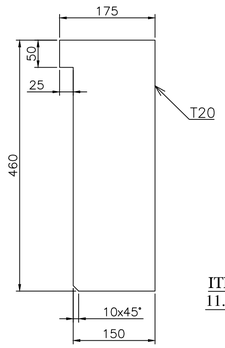

ITEM 9
11.1 KG

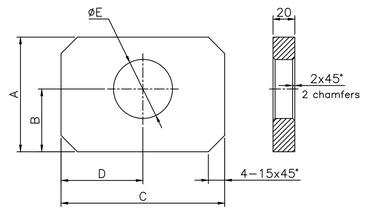

ITEM 15/16 /17/18 /19

Dimensions, mm

Item no.	Pos.	A	B	C	D	E	Mass,kg
015	–01	160	90	150	75	54	3.42
016	–02	160	90	190	95	54	4.42
017	–03	160	90	240	120	54	5.68
018	–04	120	40	150	75	48	2.47
019	–05	144	57	220	110	54	4.26

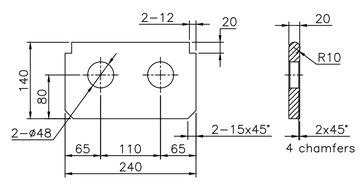

ITEM 20
4.56 KG

GPT ASSY. DRG. NO. GPT 612001.2000	ITEM NO. 33		GPT DRG. NO. GPT 612001.2060
ADDITIONAL INFORMATION WO. NO.- 62007-A-512-01		500 MVA, 765/400/33 KV 1 PHASE, AUTO TRANSFORMER MEGHA ENGG. & INFRA LTD. TRFR & REACTOR PKG FOR WUPPTCL	
STATUS OF DRAWING U			
DISTRIBUTION OF PRINTS TRE-1, TRM-3 FTM-8	भारत हेवी इलेक्ट्रिकल्स लिमिटेड भोपाल BHARAT HEAVY ELECTRICALS LTD. BHOPAL		

REV.	DATE	ALTERED	CHECKED	APPROVED
02	04/04/2005	SKC	LALIT	AKP
		SHEET NO. 01 REVISED		
01	30/10/2014	SKC	LALIT	AKP
		IT. 033 SIZE WAS 8X20X40 IN BOM. IT. 014 TK WAS 20 IN BOM. ITEM 014 UPDATED.		

	नाम/ NAME	हस्ताक्षर/ SIGN	दिनांक/DATE	पृ.सं. की संख्या NO. OF SHEET
जारी उपा	SKC		30.04.14	
डिजा	LALIT		05.05.14	
अनु.	AKP		08.05.14	–

शिल्प SCFT	TRE
कोड CODE	406
अनुपात SCALE	–
भा. हे.इ.लि. WEIGHT KGS	1074
उत्पा. दृष्टांत का नंबर REF. TO ASSY. DRG.	0 498 70 00002
मद सं. ITEM NO.	33
मद संख्या NO. OF ITEM	–

शीर्षक/ TITLE: BOTTOM LV YOKE BEAM

ड्राई. सं./DRAWING NO.: 1 498 70 00019

पुन/REV: 02

पृष्ठ सं./SHT. No. 02 पृष्ठों की संख्या/NO. OF SHT. 04

REF. DRG. NO. | SIGN. & DATE | INVENTORY NO.

FIRST ANGLE PROJECTION

(ALL DIMENSIONS ARE IN mm)

DRG. NO. 1 498 70 00019

THE INFORMATION ON THIS DOCUMENT IS THE PROPERTY OF BHARAT HEAVY ELECTRICALS LIMITED
IT MUST NOT BE USED DIRECTLY OR INDIRECTLY IN ANY WAY DETRIMENTAL TO THE INTEREST OF THE COMPANY

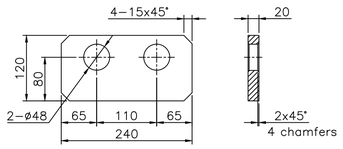

ITEM 21
3.81 kg

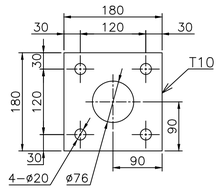

ITEM 22
2.1 KG

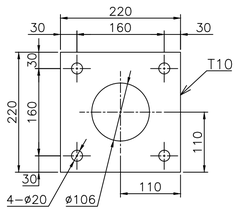

ITEM 23
3.02 KG

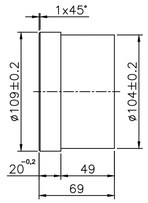

ITEM 24
4.74 KG

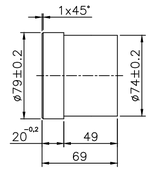

ITEM 25
2.43 KG

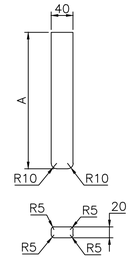

ITEM 26/27/28/29

Dimensions, mm

Item no.	Pos.	A	Mass,kg
026	−01	195	1.22
027	−02	380	2.42
028	−03	490	3.11
029	−04	555	3.49

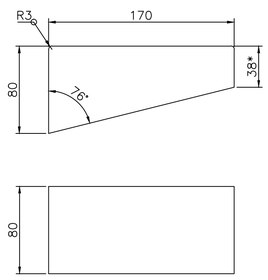

ITEM 30
6.3 kg

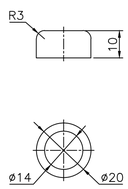

ITEM 31
0.01 kg

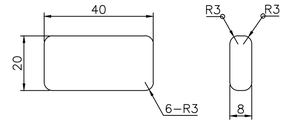

ITEM 32
0.56 kg

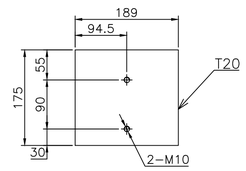

ITEM 33
5.2 kg

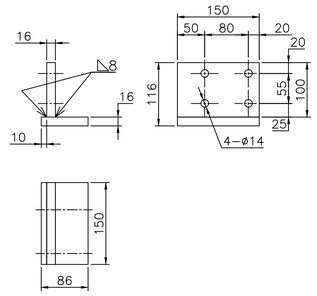

ITEM 35
3.49 kg

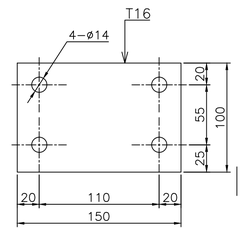

ITEM 36
1.89 kg

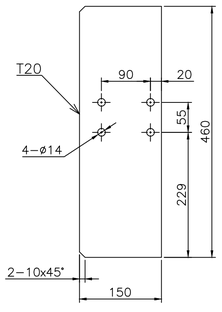

ITEM 38
10.9 kg

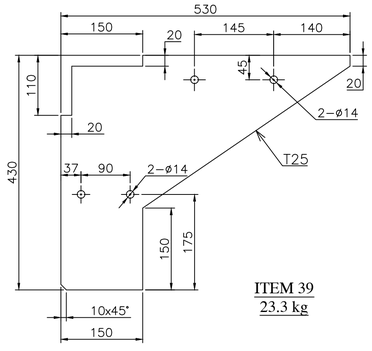

ITEM 39
23.3 kg

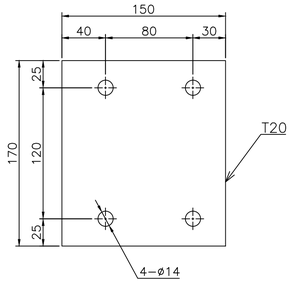

ITEM 40
4.01 kg

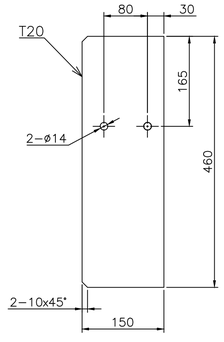

ITEM 41
10.9 kg

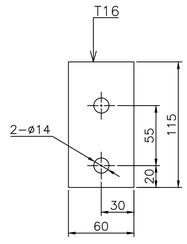

ITEM 42
0.86 kg

GPT ASSY. DRG. NO. GPT 612001.2000	ITEM NO. 33		GPT DRG. NO. GPT 612001.2060
ADDITIONAL INFORMATION WO. NO.- 62007-A-512-01	उत्पाद का प्रकार या ग्राहक / परियोजना का नाम TYPE OF PRODUCT OR NAME OF CUSTOMER/PROJECT	500 MVA, 765/400/33 KV 1 PHASE, AUTO TRANSFORMER MEGHA ENGG. & INFRA LTD. TRFR & REACTOR PKG FOR WUPPTCL	
STATUS OF DRAWING U			
DISTRIBUTION OF PRINTS TRE-1, TRM-3 FTM-8	भारत हेवी इलेक्ट्रिकल्स लिमिटेड भोपाल BHARAT HEAVY ELECTRICALS LTD. BHOPAL		

	नाम/ NAME	हस्ताक्षर/ SIGN	दिनांक/DATE	ड्रा. की संख्या NO. OF DWG
बनाया DRN	SKC		30.04.14	
जाँचा CHK	LALIT		05.05.14	
स्वीकृत APPD	AKP		08.05.14	–

REV.	DATE	ALTERED	SKC	
		CHECKED	LALIT	
		APPROVED	AKP	
02	04/04/2015	SHEET NO. 01 REVISED		

REV.	DATE	ALTERED	SKC	
		CHECKED	LALIT	
		APPROVED	AKP	
01	31/10/2014	IT. 033 SIZE WAS 8X20X40 IN BOM. IT. 014 TK WAS 20 IN BOM. ON SHEET 2 IT. 014 UPDATED.		

विभाग DEPT. TRE	डीम, टोल, माप की बेसे UNTOL. DIMS. GR. –		अनुपात SCALE	भार कि.ग्रा. WEIGHT KGS. 1074
कोड CODE 406				

शीर्षक/ TITLE	BOTTOM LV YOKE BEAM
क्रमांक/ REF. TO ASSY. DRG.	0 498 70 00002
मद सं. ITEM NO.	33
मद संख्या NO. OF ITEM	–
ड्रा. सं./DRAWING NO.	1 498 70 00019
पुनर्/REV.	02
पृष्ठ सं./SHT. No. 03	पृष्ठों की संख्या/NO. OF SHT. 04

INVENTORY NO. | SIGN. & DATE | REF. DRG. NO.

FIRST ANGLE PROJECTION

(ALL DIMENSIONS ARE IN mm)

DRG. NO. 1 498 70 00019

J1

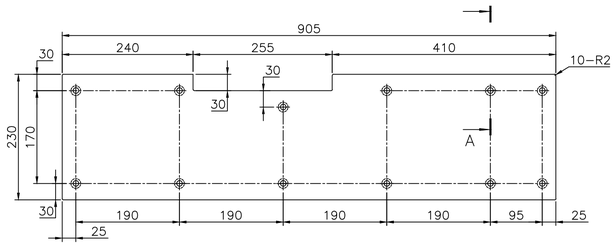

ITEM 46
7.1 kg
1.Round with 2mm radius

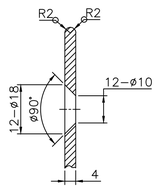

View of A–A(10:1)

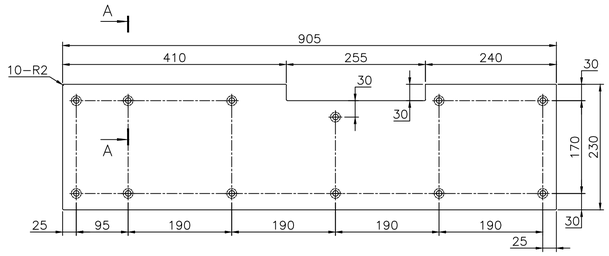

ITEM 44
7.1 kg
1.Round with 2mm radius

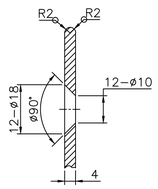

View of A–A(10:1)

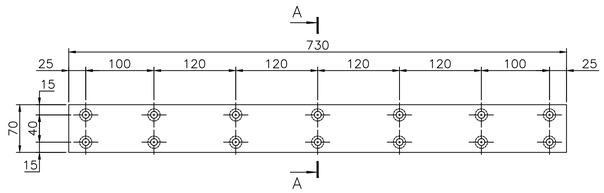

ITEM 45
1.7 kg

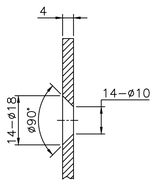

View of A–A(10:1)

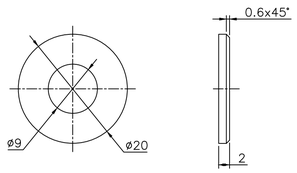

ITEM 48
.004 kg

GPT ASSY. DRG. NO.	GPT 612001.2000	ITEM NO.	33	GPT DRG. NO.	GPT 612001.2060

ADDITIONAL INFORMATION
WO. NO.- 62007-A-512-01

STATUS OF DRAWING U

DISTRIBUTION OF PRINTS
TRE-1, TRM-3
FTM-8

उत्पाद का प्रकार या ग्राहक / परियोजना का नाम
TYPE OF PRODUCT OR NAME OF CUSTOMER/PROJECT
500 MVA, 765/400/33 KV 1 PHASE, AUTO TRANSFORMER
MEGHA ENGG. & INFRA LTD.
TRFR & REACTOR PKG FOR WUPPTCL

भारत हेवी इलेक्ट्रिकल्स लिमिटेड
भोपाल
BHARAT HEAVY ELECTRICALS LTD.
BHOPAL

	नाम/ NAME	हस्ताक्षर/ SIGN	दिनांक/DATE	ड्रा. की संख्या NO. OF DWG
बनाया / DRAWN	SKC		30.04.14	
जाँचा / CHECKED	LALIT		05.05.14	
स्वीकृत / APPD	AKP		08.05.14	–

REV.	DATE	ALTERED SKC	
02	04/04/2015	CHECKED LALIT	
		APPROVED AKP	

SHEET NO. 01 REVISED

REV.	DATE	ALTERED SKC	
01	20/10/2014	CHECKED LALIT	
		APPROVED AKP	

IT. 033 SIZE WAS 8X20X40 IN BOM. IT. 014 TK WAS 20 IN BOM. ON SHEET 2 IT. 014 UPDATED.

विभाग DEPT TRE
कोड CODE 406
जेन. इंजी. सहा की वेबसाईट UNITAL DWG. GR. –
SCALE
WEIGHT KGS. 1074
जेन. ड्रॉइंग का वेबसाईट REF. TO ASSY. DRG. 0 498 70 00002
मद सं. ITEM NO. 33
मद सैंकड़ा NO. OF ITEM –

शीर्षक/ TITLE
BOTTOM LV YOKE BEAM

ड्रॉइंग सं./DRAWING NO. 1 498 70 00019
पुनः/REV 02
पृष्ठ सं./SHT. No. 04 पृष्ठों की संख्या/NO. OF SHT. 04

THE INFORMATION ON THIS DOCUMENT IS THE PROPERTY OF BHARAT HEAVY ELECTRICALS LIMITED
IT MUST NOT BE USED DIRECTLY OR INDIRECTLY IN ANY WAY DETRIMENTAL TO THE INTEREST OF THE COMPANY

INVENTORY NO. | SIGN. & DATE | REF. DRG. NO.

BILL OF MATERIAL	DEP NO	NO OF IT	NO OF VAR	TYPE OF PRODUCT	WORKORDER	DRG NO	CORE CODE	REV
		38	1	500MVA,765KV,1PH. MEGA	62007A51201	14987000020	65170700	03
					TITLE: TOP END FRAME H.V.SIDE TOP END FRAME H			SHT NO 1 OF 3

DU	VAR03	VAR02	VAR01	VAR00	REMARKS	IT NO	DESCRIPTION / MAT SIZE	TK	WDT	LEN	ID	OD	DIM1	DRAWING NO / DETAILS	IT. VAR	MATCODE / MAT SPEC	A/C	UT	UNIT WT / QTY	G/S / ZONE
				00002	PART 23 TO DETAIL	001	RIB	22	140	510						AA10740		KG	10.400	
				00007	PART 1-02 TO DETAIL	002	RIB	20	115	510						AA10108		KG	9.200	
				00001	PART 1-03 TO DETAIL	003	RIB	22	115	440						AA10740		KG	8.700	
				00001	PART 2 TO DETAIL `	004	RIB	20	115	510						AA10108		KG	7.700	
				00002	PART 3-01 TO DETAIL	005	RIB	20	120	115						AA10740		KG	1.420	
				00001	PART 3-03	007	RIB	20	160	115						AA10108		KG	1.850	
				00002	PART 3-04	008	RIB	20	70	100						AA10108		KG	0.790	
				00003	PART 4	010	PLATE									AA10113		KG	0.040	
				00005	PART 5	011	RIB	20	85	85						AA10108		KG	0.810	
				00004	PART 6	012	BAR	60	150	173						AA10108		KG	18.500	
				00001	PART 7 TO DETAIL	013	PLATE	25	510	5585						AA10108		KG	490.000	
				00001	PART 8	014	PLATE	20	225	5585						AA10108		KG	115.000	

DISTRIBUTION DETAILS					REV NO. 3	PREP BY	CKD BY	APPD BY	DATE 05 FEB 2016
TRE	TRM				PREP BY	CKD BY	APPD BY	DATE	
1	3				KVA	LK	AKP	24 APR 2014	DRG NO 14987000020 SHT 1 OF 3

BILL OF MATERIAL	DEP NO	NO OF IT	NO OF VAR	TYPE OF PRODUCT	WORKORDER	DRG NO	CORE CODE	REV
		38	1	500MVA,765KV,1PH. MEGA	62007A51201	14987000020	65170700	03
					TITLE: TOP END FRAME H.V.SIDE TOP END FRAME H			SHT NO 2 OF 3

DU	VAR03	VAR02	VAR01	VAR00	REMARKS	IT NO	DESCRIPTION / MAT SIZE	TK	WDT	LEN	ID	OD	DIM1	DRAWING NO / DETAILS	IT.	MATCODE / MAT SPEC	A/C	UT	UNIT WT / QTY	G/S / ZONE
				00001	PART 9	015	PLATE	20	140	1622						AA10740		KG	22.700	
				00001	PART 10 TO DETAIL	016	PLATE	20	140	1332						AA10740		KG	29.400	
				00001	PART 11 TO DETAIL	017	PLATE	20	140	2627						AA10740		KG	44.700	
				00004	PART 12-01 TO DETAIL	018	PLATE	20	145	150						AA10108		KG	3.060	
				00001	PART 12-02 TO DETAIL	019	PLATE	20	120	150						AA10108		KG	2.490	
				00001	PART 12-03 TO DETAIL	020	PLATE	20	120	150						AA10108		KG	2.470	
				00002	PART 12-04 TO DETAIL	021	PLATE	20	144	245						AA10108		KG	5.110	
				00002	PART 13 TO DETAIL	022	PLATE	20	120	240						AA10740		KG	3.850	
				00002	PART 14	023	PLATE	32	160	245						AA10122		KG	6.620	
				00001	PART 15	024	PLATE	32	126	315						AA10122		KG	6.400	
				00004	PART 16 TO DETAIL	025	PLATE	8	20	40						AA10108		KG	0.056	
				00001	PART 17 TO DETAIL	026	CHANNEL	50	100	140						AA10108		KG	1.280	

DISTRIBUTION DETAILS					REV NO. 3	PREP BY	CKD BY	APPD BY	DATE 05 FEB 2016
TRE	TRM				PREP BY	CKD BY	APPD BY	DATE	
1	3				KVA	LK	AKP	24 APR 2014	DRG NO 14987000020 SHT 2 OF 3

BILL OF MATERIAL	DEP NO	NO OF IT	NO OF VAR	TYPE OF PRODUCT	WORKORDER	DRG NO	CORE CODE	REV
		38	1	500MVA,765KV,1PH. MEGA	62007A51201	14987000020	65170700	03
					TITLE: TOP END FRAME H.V.SIDE TOP END FRAME H			SHT NO 3 OF 3

DU	VAR03	VAR02	VAR01	VAR00	REMARKS	IT NO	DESCRIPTION / MAT SIZE	TK	WDT	LEN	ID	OD	DIM1	DRAWING NO / DETAILS	IT.	MATCODE / MAT SPEC	A/C	UT	UNIT WT / QTY	G/S / ZONE
				00001	PART 18 TO DETAIL	027	PLATE	16	75	80						AA10740		KG	0.760	
				00002	PART 19 TO DETAIL	028	PLATE	20	110	185						AA10108		KG	1.910	
				00002	PART 20 TO DETAIL	029	PLATE	20	88	140						AA10740		KG	1.940	
				00002	PART 21 TO DETAIL	030	PLATE	20	140	284						AA10740		KG	4.500	
				00002	PART 22 TO DETAIL	031	PLATE	20	140	183						AA10740		KG	4.000	
				00002	GPT.612001.2009	033	GROUNDING PAD							44987000029		AA10740				
				00002	GPT.612001.2081-09	034	BRACKET							44987000028	09			KG	9.700	
				00001	GPT.612001.2082-01	035	BRACKET							34987000123	00					
				00004	PART 24	036	PLATE	16	70	115						AA10108		KG	1.010	
				00001	PART 25	037	PLATE	22	115	440						AA10740		KG	8.700	
				00002	PART 26	038	RIB	22	140	510						AA10740		KG	10.400	

1022.5

DISTRIBUTION DETAILS					REV NO. 3	PREP BY	CKD BY	APPD BY	DATE 05 FEB 2016
TRE	TRM				PREP BY	CKD BY	APPD BY	DATE	
1	3				KVA	LK	AKP	24 APR 2014	DRG NO 14987000020 SHT 3 OF 3

FIRST ANGLE PROJECTION

(ALL DIMENSIONS ARE IN mm)

DRG. NO. 1 498 70 00020

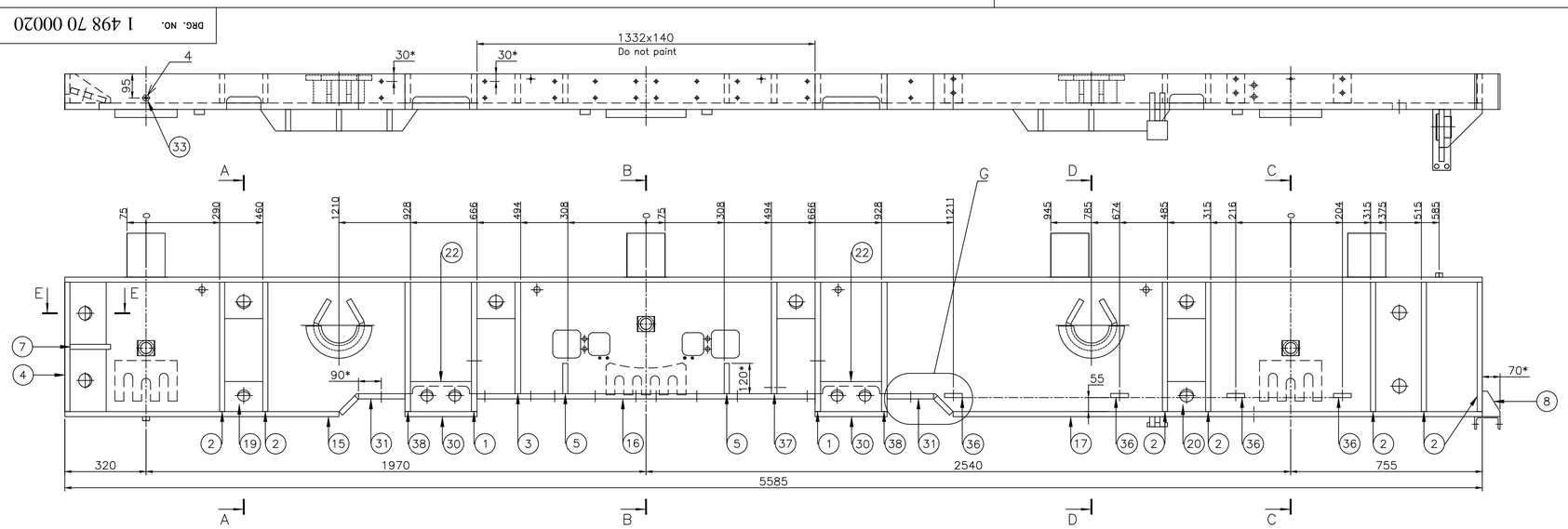

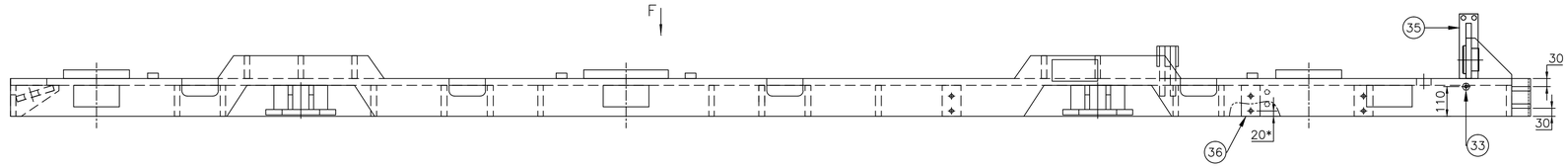

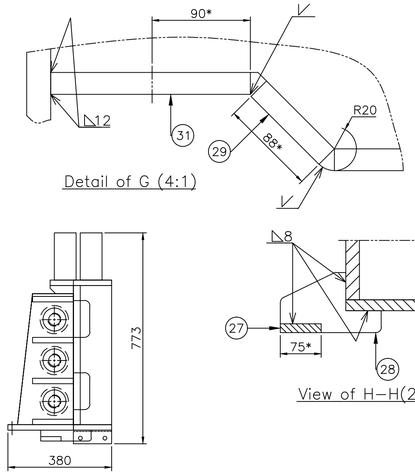

NOTES:-

1. FOR DELINKED BOM REFER COMPUTER BOM NO. 14987000020.
2. *REFERENCE DIMENSIONS.
3. ALL SHARP EDGES OF THE YOKE BEAM MAST BE ROUNDED.
4. WELDING OF LOW-MAGNETIC STEEL SHALL BE MADE BY STAINLESS ELECTRODE.
5. SURFACE COATING SHELL BE UNDER CUSTOMER TECHNOLOGICAL INSTRUCTION - OIL PROOF.
6. THE FACE SIDE OF THE GROUNDING PAD DO NOT PAINT.
7. ALL THE RIBS SHALL BE WELDED BY Δ 8.
8. ALL THE ANGLES SHALL BE WELDED BY Δ6.
9. ALL WELD SEAMS, WHICH ARE NOT SPECIFIED, SHALL BE WELDED BY Δ 8.
10. DO NOT PAINT THE BOTTOM FACE OF THE PLATE POS.16 ON THE AREA 140X1332 MM.
11. THE REST OF UNSPECIFIED TECHNICAL REQUIREMENTS SHALL BE IN ACCORDANCE WITH NORMATIVE DOCUMENTS OF CUSTOMER.

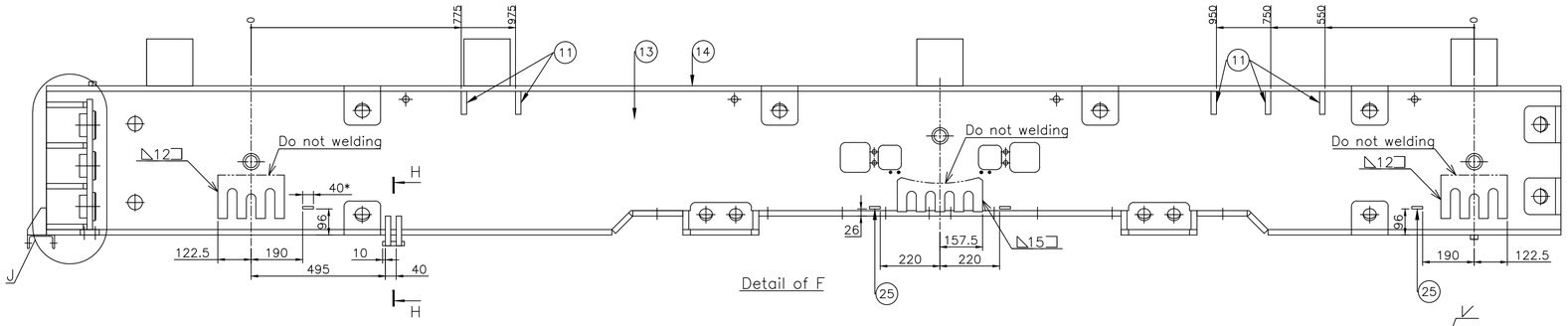

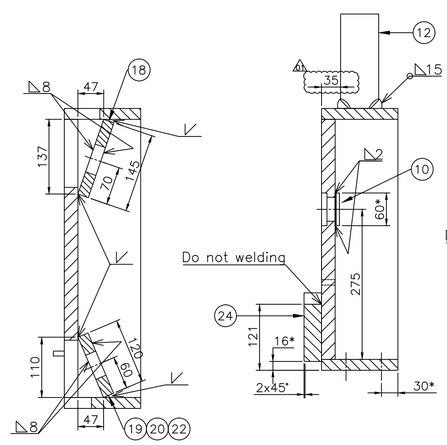

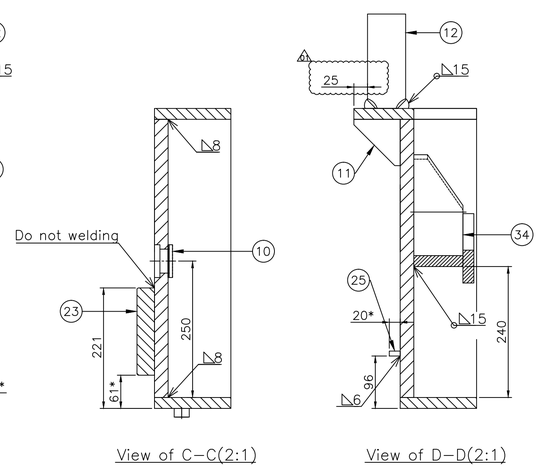

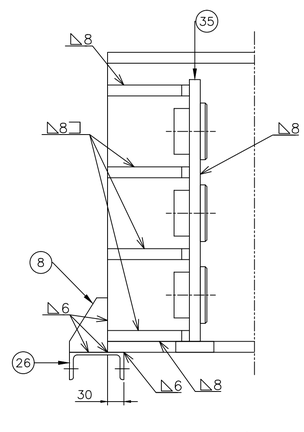

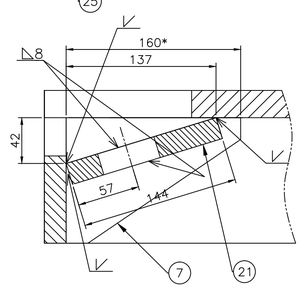

QTY	NO.	NAME	MATERIAL	DWG. NO. & SPEC MATERIAL CODE	SIZE TxWxL	REMARK
2	38	Rib	SS AA10740	Part 26	22x140x510	
1	37	Plate	SS AA10740	Part 25	22x115x440	
4	36	Plate	MS AA10108	Part 24	16x70x115	
1	35	Bracket		GPT.612001.2082–01		
2	34	Bracket		GPT.612001.2081–09		9,7kg
2	33	Grounding pad	SS AA10740	GPT.612001.2009		
2	31	Plate	SS AA10740	Part 22	20x140x183	
2	30	Plate	SS AA10740	Part 21	20x140x284	
2	29	Plate	SS AA10740	Part 20	20x88x140	
2	28	Plate	MS AA10108	Part 19	20x110x185	
1	27	Plate	SS AA10740	Part 18	16x75x80	
1	26	Channel	MS AA10108	Part 17	50x100x140	
4	25	Plate	MS AA10108	Part 16	8x20x40	
1	24	Plate	HTS AA10122	Part 15	32x126x315	
2	23	Plate	HTS AA10122	Part 14	32x160x245	
2	22	Plate	SS AA10740	Part 13	20x120x240	
2	21	Plate	MS AA10108	Part 12–04	20xAxC	
1	20	Plate	MS AA10108	Part 12–03	20xAxC	
1	19	Plate	MS AA10108	Part 12–02	20xAxC	
4	18	Plate	MS AA10108	Part 12–01	20xAxC	
1	17	Plate	SS AA10740	Part 11	20x140x2627	
1	16	Plate	SS AA10740	Part 10	20x140x1332	
1	15	Plate	SS AA10740	Part 9	20x140x1622	
1	14	Plate	MS AA10108	Part 8	20x225x5585	
1	13	Plate	MS AA10108	Part 7	25x510x5585	
4	12	Bar	MS AA10108	Part 6	60x150x173	
5	11	Rib	MS AA10108	Part 5	20x85x85	
3	10	Plate	MS AA10113	Part 4		
2	8	Rib	MS AA10108	Part 3–04	20xAxB	
1	7	Rib	MS AA10108	Part 3–03	20xAxB	
2	5	Rib	SS AA10740	Part 3–01	20xAxB	
1	4	Rib	MS AA10108	Part 2	20x115x510	
1	3	Rib	SS AA10740	Part 1–03	Tx115xA	
7	2	Rib	MS AA10108	Part 1–02	Tx115xA	
2	1	Rib	SS AA10740	Part 23	22x140x510	

GPT ASSY. DRG. NO. GPT 612001.2000 | ITEM NO. 34 | GPT DRG. NO. GPT 612001.2080

ADDITIONAL INFORMATION
WO. NO.- 62007-A-512-01
STATUS OF DRAWING U

DISTRIBUTION OF PRINTS
TRE-1, TRM-3
FTM-8

उत्पाद का प्रकार या ग्राहक / परियोजना का नाम
TYPE OF PRODUCT OR NAME OF CUSTOMER/PROJECT

500 MVA, 765/400/33 KV 1 PHASE, AUTO TRANSFORMER
MEGHA ENGG. & INFRA LTD.
TRFR & REACTOR PKG FOR WUPPTCL

भारत हेवी इलेक्ट्रिकल्स लिमिटेड भोपाल
BHARAT HEAVY ELECTRICALS LTD. BHOPAL

	नाम/ NAME	हस्ता/ SIGN	दिनांक/DATE
जारी कर्ता CRD	SKC		30.04.14
चेक्ड CKD	LALIT		05.05.14
स्वीकृत APRD	AKP		08.05.14

REV.	DATE	ALTERED	CHECKED	APPROVED
03	05.02.16	SKC	LK	A.K.P.
02	10.11.15	SKC	LK	A.K.P.
01	16.10.14	SKC	LK	A.K.P.

REV. IT.012 DIM. UPDATED.
REV. SHEET NO. 03 REVISED.
ZONE IT,– 12 SIZE CHANGED FROM 80x156x173 TO 60x150x173

विभाग DEPT. TRE | कोड CODE 406 | जब तक अन्यथा नहीं कहा UNTOL. DIMS. GR. – | स्केल SCALE | भार WEIGHT (KG) 1063 | ड्रा. सं./REF. TO ASSY. DRG. 0 498 70 00002 | मद सं. ITEM NO. 34 | मद संख्या NO. OF ITEM –

शीर्षक/ TITLE
UPPER HV YOKE BEAM

ड्रा. सं./DRAWING NO. 1 498 70 00020 | पुनः/REV 03

पृष्ठ सं./SHT. No. 01 पृष्ठों की संख्या/NO. OF SHT. 03

THE INFORMATION ON THIS DOCUMENT IS THE PROPERTY OF BHARAT HEAVY ELECTRICALS LIMITED
IT MUST NOT BE USED DIRECTLY OR INDIRECTLY IN ANY WAY DETRIMENTAL TO THE INTEREST OF THE COMPANY

INVENTORY NO. | SIGN. & DATE | REF. DRG. NO.

FIRST ANGLE PROJECTION

(ALL DIMENSIONS ARE IN mm)

DRG. NO. 1 498 70 00020

Part.7

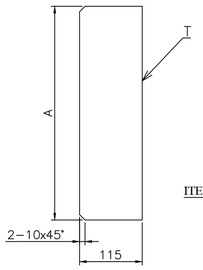

ITEM 02/03

Dimensions, mm

Item no.	Pos.	A	T	Material	Mass,kg
2	–02	510	20	MS AA10108	9,2
003	–03	440	22	SS AA10740	8.7

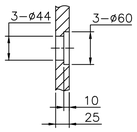

View of A–A

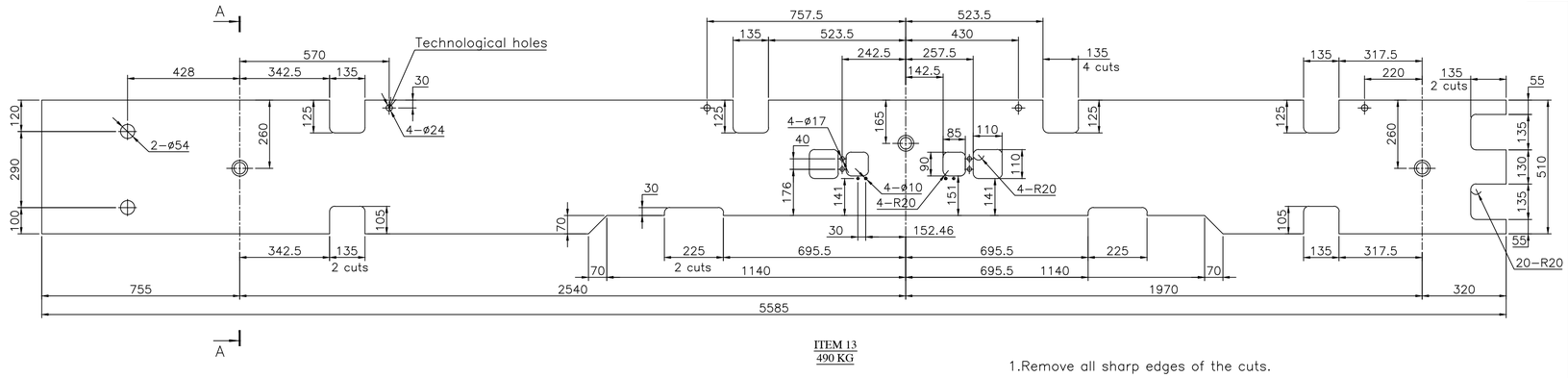

ITEM 13
490 KG

1.Remove all sharp edges of the cuts.

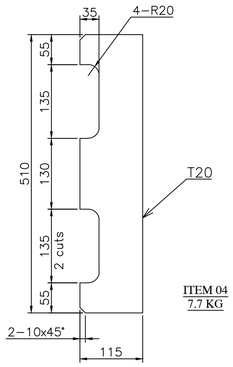

ITEM 04
7.7 KG

1.Remove all sharp edges of the cuts.

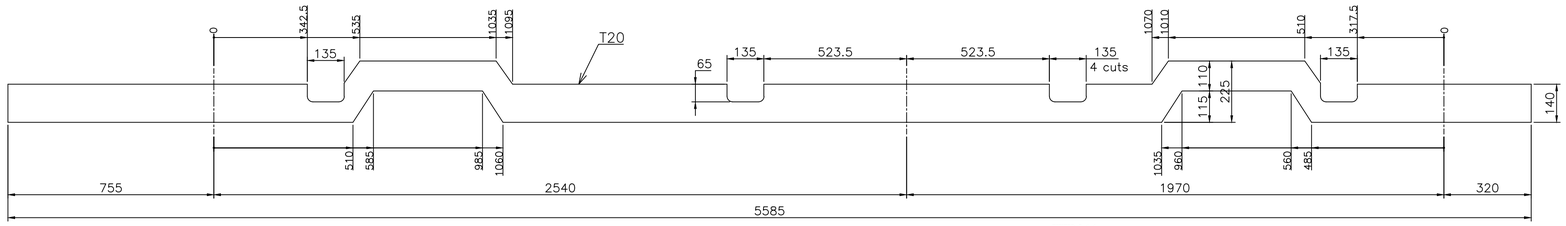

1.Remove all sharp edges of the cuts.

ITEM 14
115 KG

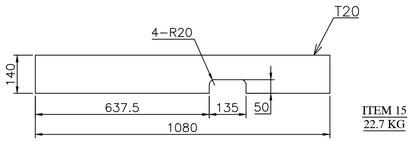

ITEM 15
22.7 KG

1.Remove all sharp edges of the cuts.

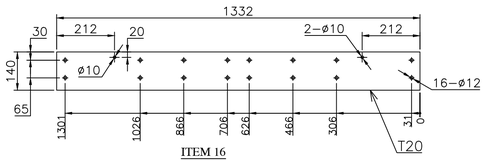

ITEM 16
29.4 KG

1.Remove all sharp edges of the cuts.

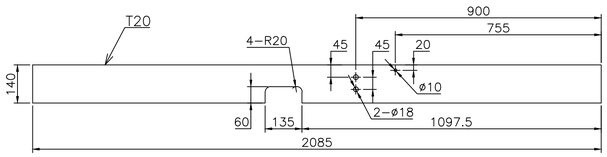

ITEM 17
44.7 KG

1.Remove all sharp edges of the cuts.

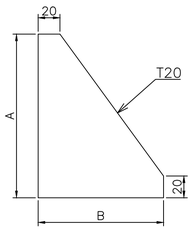

ITEM 05/07/08

Dimensions, mm

Item no.	Pos.	A	B	Material	Mass,kg
005	–01	120	115	SS AA10740	1,42
	–02				
007	–03	160	115	MS AA10108	1.85
008	–04	70	100	MS AA10108	0.79

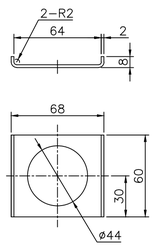

ITEM 10
0.4 KG

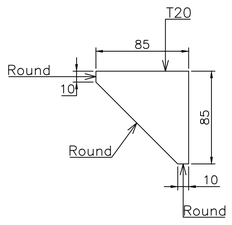

ITEM 11
0.81 KG

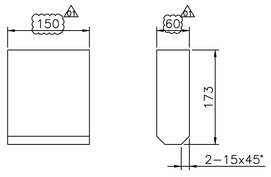

ITEM 12
18.5 KG

Item no.	Pos.	A	B	C	D	E	Mass,kg
18	–01	145	70	150	75	54	3.06
19	–02	120	60	150	75	48	2.49
20	–03	120	60	150	75	54	2.47
21	–04	144	57	245	122.5	54	5.11

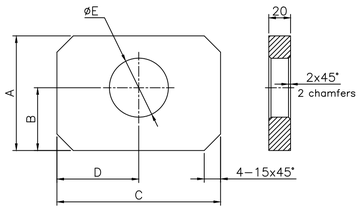

ITEM 18/19 /20/21

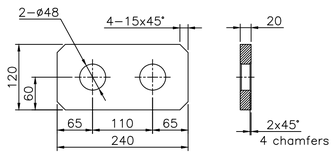

ITEM 22
3.85 KG

REV.	DATE	ALTERED / CHECKED / APPROVED	SKC / LK / AKP.
03	05.02.16		
REV.	SHEET NO. 01 REVISED.		

REV.	DATE	ALTERED / CHECKED / APPROVED	SKC / LK / AKP.
02	10.11.15		
REV.	SHEET NO. 03 REVISED.		

REV.	DATE	ALTERED / CHECKED / APPROVED	SKC / LK / AKP.
01	16.10.14		
ZONE	IT.– 12 SIZE CHANGED FROM 80x156x173 TO 60x150x173		

GPT ASSY. DRG. NO. GPT 612001.2000	ITEM NO. 34
ADDITIONAL INFORMATION	WO. NO.- 62007-A-512-01
STATUS OF DRAWING	U
DISTRIBUTION OF PRINTS	TRE-1, TRM-3, FTM-8
उत्पाद का प्रकार या ग्राहक /परियोजना का नाम TYPE OF PRODUCT OR NAME OF CUSTOMER/PROJECT	500 MVA, 765/400/33 KV 1 PHASE, AUTO TRANSFORMER MEGHA ENGG. & INFRA LTD. TRFR & REACTOR PKG FOR WUPPTCL
भारत हेवी इलेक्ट्रिकल्स लिमिटेड भोपाल	BHARAT HEAVY ELECTRICALS LTD. BHOPAL
विभाग DRN	SKC
चेक्ड CHD	LALIT
स्वीकृत APD	AKP
तारीख DATE	30.04.14 / 05.05.14 / 08.05.14
GPT DRG. NO.	GPT 612001.2080
विभाग DEPT.	TRE
कोड CODE	406
जेन, एम. आर. सी केवी UNTOL. DIMS. OK	–
मटेरियल SCALE	
मास WEIGHT (KG)	1063
जेन. ड्राईंग का संदर्भ REF. TO ASSY. DWG	0 498 70 00002
मद सं. ITEM NO.	34
मद के कुल NO. OF ITM	–
शीर्षक/ TITLE	UPPER HV YOKE BEAM
ड्राईंग सं./DRAWING NO.	1 498 70 00020
पृष्ठ सं./SHT. No. 02	ड्राईंगों की कुल संख्या/NO. OF SHT. 03
संशोधन/REV	03

THE INFORMATION ON THIS DOCUMENT IS THE PROPERTY OF BHARAT HEAVY ELECTRICALS LIMITED
IT MUST NOT BE USED DIRECTLY OR INDIRECTLY IN ANY WAY DETRIMENTAL TO THE INTEREST OF THE COMPANY

INVENTORY NO. SIGN. & DATE REF. DRG. NO.

FIRST ANGLE PROJECTION

(ALL DIMENSIONS ARE IN mm)

DRG. NO. 1 498 70 00020

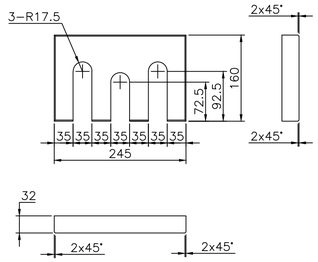

ITEM 23
6.62 KG

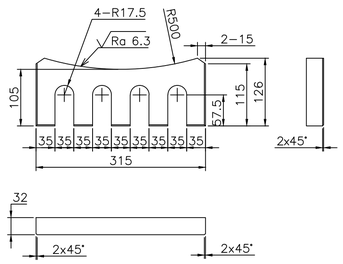

ITEM 24
6.4 KG

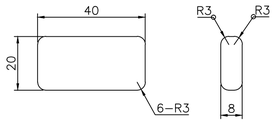

ITEM 25
.056 KG

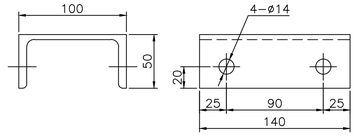

ITEM 26
1.28 KG

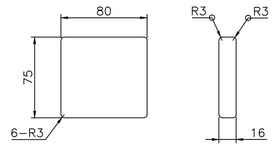

ITEM 27
0.76 KG

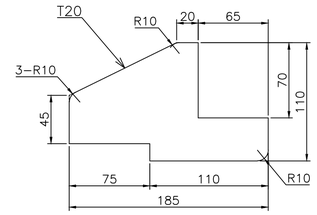

ITEM 28
1.91 KG

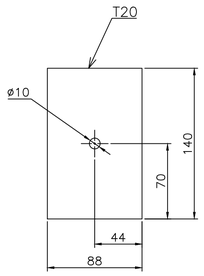

ITEM 29
1.94 KG

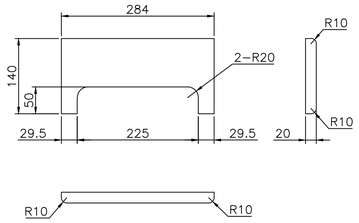

ITEM 30
4.5 KG

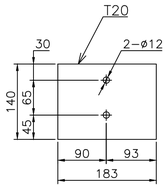

ITEM 31
4.0 KG

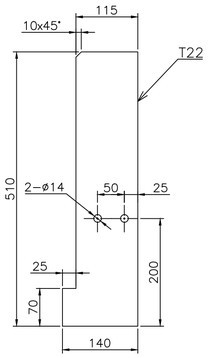

ITEM 01
10.4 KG

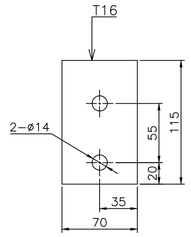

ITEM 36
1.01 KG

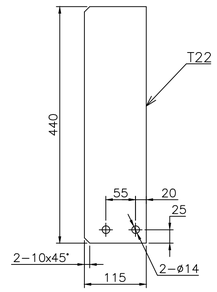

ITEM 37
8.7 KG

1.Remove all sharp edges of the cuts.

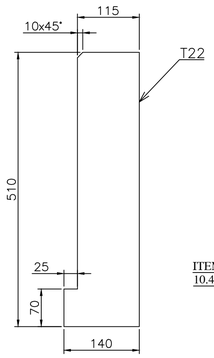

ITEM 38
10.4 KG

GPT ASSY. DRG. NO.	GPT 612001.2000
ITEM NO.	34
GPT DRG. NO.	GPT 612001.2080
ADDITIONAL INFORMATION	WO. NO.- 62007-A-512-01
उत्पाद का प्रकार या ग्राहक /प्रोजेक्ट का नाम TYPE OF PRODUCT OR NAME OF CUSTOMER/PROJECT	500 MVA, 765/400/33 KV 1 PHASE, AUTO TRANSFORMER MEGHA ENGG. & INFRA LTD. TRFR & REACTOR PKG FOR WUPPTCL
STATUS OF DRAWING	U
DISTRIBUTION OF PRINTS	TRE-1, TRM-3 FTM-8
भारत हेवी इलेक्ट्रिकल्स लिमिटेड भोपाल BHARAT HEAVY ELECTRICALS LTD. BHOPAL	

	नाम/ NAME	हस्ताक्षर/ SIGN	दिनांक/DATE	ड्रा. की डिग्री NO. OF VAR
बनाया DRN	SKC		30.04.14	
जाँचा CHK	LALIT		05.05.14	
स्वीकृत APPD	AKP		08.05.14	–

REV.	DATE	ALTERED / CHECKED / APPROVED	SKC / LK / A.K.P.
02	10.11.15		
		SHEET NO.1 REVISED	
02	10.11.15		
		R500 MARKED IN IT.024	
01	16.10.14		
		SHEET 1 & 2 REVISED	

विभाग DEPT.	TRE
सीट CODE	406
जब. एम. मात्रा की रेखें UNITS. DIMS. OR.	–
मात्रा SCALE	
भा. वि.इ. WEIGHT SCALE	1063
उपरि. ड्राईंग का रेफरेंस REF. TO ASSY. DRG.	0 498 70 00002
मद क्र. ITEM NO.	34
मद डिग्री NO. OF ITEM	–
शीर्षक/ TITLE	UPPER HV YOKE BEAM
ड्राईंग सं./DRAWING NO.	1 498 70 00020
पुनः/REV	03
पृष्ठ सं./SHT. No.	03 पृष्ठों की डिग्री/NO. OF SHT. 03

THE INFORMATION ON THIS DOCUMENT IS THE PROPERTY OF BHARAT HEAVY ELECTRICALS LIMITED
IT MUST NOT BE USED DIRECTLY OR INDIRECTLY IN ANY WAY DETRIMENTAL TO THE INTEREST OF THE COMPANY

INVENTORY NO. SIGN. & DATE REF. DRG. NO.

BILL OF MATERIAL	DEP NO	NO OF IT	NO OF VAR	TYPE OF PRODUCT	WORKORDER	DRG NO	CORE CODE	REV
		38	36	500MVA,765KV,1PH. MEGA	62007A51201	14987000021	65170701	03
					TITLE: TOP END FRAME L.V.SIDE TOP END FRAME L			SHT NO 1 OF 3

DU	VAR03	VAR02	VAR01	VAR00	REMARKS	IT NO	DESCRIPTION / MAT SIZE	TK	WDT	LEN	ID	OD	DIM1	DRAWING NO / DETAILS	IT. VAR	MATCODE / MAT SPEC	A/C	UT	UNIT WT / QTY	G/S / ZONE
				00002	PART 23 TO DETAIL	001	RIB	22	410	510						AA10740		KG	10.400	
				00007	PART 1-02 TO DETAIL	002	RIB	20	115	510						AA10108		KG	9.200	
				00002	PART 1-03 TO DETAIL	003	RIB	22	115	440						AA10740		KG	8.700	
				00001	PART.2 TO DETAIL	004	RIB	20	115	510						AA10108		KG	7.700	
				00002	PART 3-01 TO DETAIL	005	RIB	20	120	115						AA10740		KG	1.420	
				00001	PART 3-03 TO DETAIL	007	RIB	20	160	115						AA10108		KG	1.850	
				00002	PART 3-04 TO DETAIL	008	RIB	20	70	100						AA10108		KG	0.790	
				00003	PART 4 TO DETAIL	010	PLATE									AA10113		KG	0.040	
				00005	PART 5 TO DETAIL	011	RIB	20	85	85						AA10108		KG	0.810	
				00004	PART 6 TO DETAIL	012	BAR	60	150	173						AA10108		KG	18.500	
				00001	PART 7 TO DETAIL	013	PLATE	25	510	5585						AA10108		KG	490.000	
				00001	PART 8 TO DETAIL	014	PLATE	20	225	5585						AA10108		KG	115.000	

DISTRIBUTION DETAILS					REV NO. 3	PREP BY	CKD BY	APPD BY	DATE 05 FEB 2016
TRE	TRM				PREP BY	CKD BY	APPD BY	DATE	
1	3				KVA	LK	AKP	24 APR 2014	DRG NO 14987000021 SHT 1 OF 3

BILL OF MATERIAL	DEP NO	NO OF IT	NO OF VAR	TYPE OF PRODUCT	WORKORDER	DRG NO	CORE CODE	REV
					62007A51201	14987000021	65170701	03
		38	36	500MVA,765KV,1PH. MEGA	TITLE TOP END FRAME L.V.SIDE TOP END FRAME L			SHT NO 2 OF 3

DU	VAR03	VAR02	VAR01	VAR00	REMARKS	IT NO	DESCRIPTION / MAT SIZE	DRAWING NO / DETAILS	IT.	MATCODE / MAT SPEC	A/C	UT	UNIT WT / QTY	G/S / ZONE
				00001	PART 9 TO DETAIL	015	PLATE TK WDT LEN ID OD DIM1 20 140 1622			AA10740		KG	22.700	
				00001	PART 10	016	PLATE TK WDT LEN ID OD DIM1 20 140 1332			AA10740		KG	29.400	
				00001	PART 11	017	PLATE TK WDT LEN ID OD DIM1 20 140 2627			AA10740		KG	44.700	
				00004	PART 12-01 TO DETAIL	018	PLATE TK WDT LEN ID OD DIM1 20 145 150			AA10108		KG	3.060	
				00001	PART 12-02 TO DETAIL	019	PLATE TK WDT LEN ID OD DIM1 20 120 150			AA10108		KG	2.490	
				00001	PART 12-03 TO DETAIL	020	PLATE TK WDT LEN ID OD DIM1 20 120 150			AA10108		KG	2.470	
				00002	PART 12-04 TO DETAIL	021	PLATE TK WDT LEN ID OD DIM1 20 144 245			AA10108		KG	5.110	
				00002	PART 13	022	PLATE TK WDT LEN ID OD DIM1 20 120 240			AA10740		KG	3.850	
				00002	PART.14 TO DETAIL	023	PLATE TK WDT LEN ID OD DIM1 32 160 245			AA10122		KG	6.620	
				00001	PART.15	024	PLATE TK WDT LEN ID OD DIM1 32 126 315			AA10122		KG	6.400	
				00004	PART 16 TO DETAIL	025	PLATE TK WDT LEN ID OD DIM1 8 20 40			AA10108		KG	0.056	
				00001	PART.17 TO DETAIL	026	CHANNEL TK WDT LEN ID OD DIM1 50 100 140			AA10108		KG	1.280	

DISTRIBUTION DETAILS					REV NO. 3	PREP BY	CKD BY	APPD BY	DATE 05 FEB 2016
TRE	TRM				PREP BY	CKD BY	APPD BY	DATE	
1	3				KVA	LK	AKP	24 APR 2014	DRG NO 14987000021 SHT 2 OF 3

BILL OF MATERIAL	DEP NO	NO OF IT	NO OF VAR	TYPE OF PRODUCT	WORKORDER	DRG NO	CORE CODE	REV
		38	36	500MVA,765KV,1PH. MEGA	62007A51201	14987000021	65170701	03
					TITLE: TOP END FRAME L.V.SIDE TOP END FRAME L			SHT NO 3 OF 3

DU	VAR03	VAR02	VAR01	VAR00	REMARKS	IT NO	DESCRIPTION / MAT SIZE	TK	WDT	LEN	ID	OD	DIM1	DRAWING NO / DETAILS	IT.	MATCODE / MAT SPEC	A/C	UT	UNIT WT / QTY	G/S / ZONE
				00001	PART 18 TO DETAIL	027	PLATE	16	75	80						AA10740		KG	0.760	
				00002	PART 19 TO DETAIL	028	PLATE	20	110	185						AA10108		KG	1.910	
				00001	PART 20	029	PLATE	10	105	160						AA10108		KG	1.320	
				00002	PART 21	030	PLATE	20	140	284						AA10740		KG	4.500	
				00002	PART 22	031	PLATE	20	140	183						AA10740		KG	4.000	
				00002		032	PLATE	20	88	140						AA10740		KG		
				00004	GPT.612001.2009	033	GROUNDING PAD							44987000029		AA10740		KG		
				00002	GPT.612001.2081-09	034	BRACKET							44987000028	09			KG	9.700	
				00001	GPT.612001.2082-02	035	BRACKET							34987000123	01			KG		
				00002	PART 24	036	BRACKET									AA10108		KG	8.320	
				00004	PART 25	037	PLATE	16	60	115						AA10108		KG	0.860	
				00002	PART 26	038	RIB	22	140	510						AA10740		KG	10.400	

1036.0

DISTRIBUTION DETAILS					REV NO. 3	PREP BY	CKD BY	APPD BY	DATE 05 FEB 2016
TRE	TRM				PREP BY	CKD BY	APPD BY	DATE	
1	3				KVA	LK	AKP	24 APR 2014	DRG NO 14987000021 SHT 3 OF 3

FIRST ANGLE PROJECTION

(ALL DIMENSIONS ARE IN mm)

DRG. NO. 1 498 70 00021

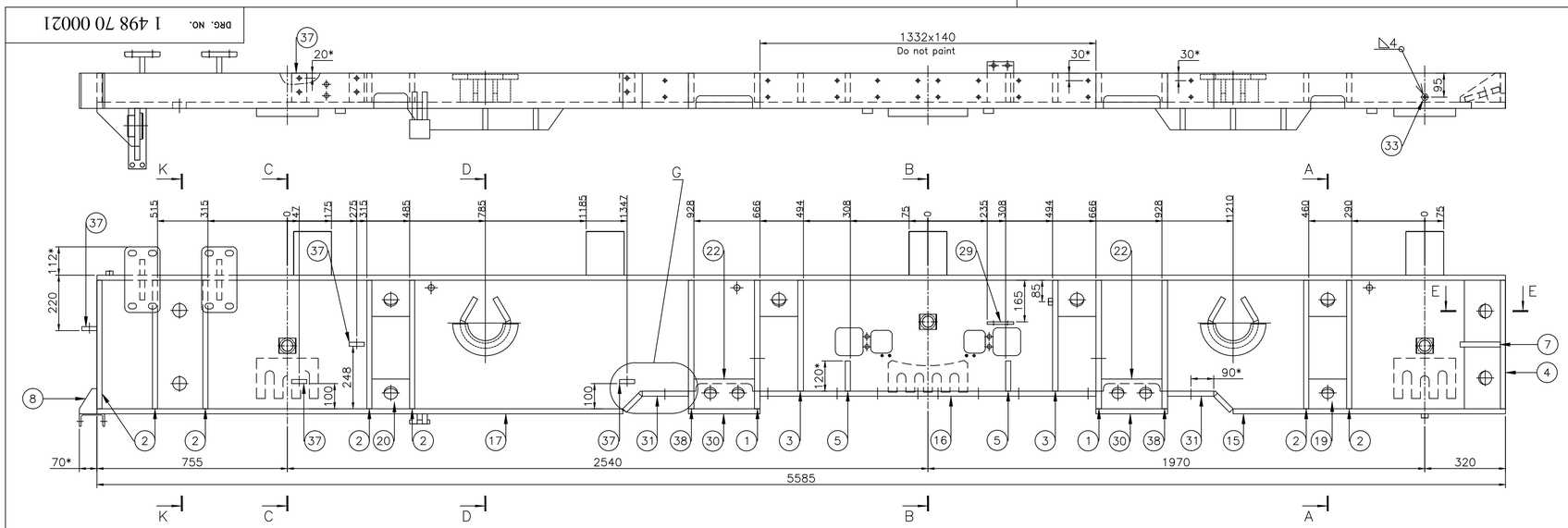

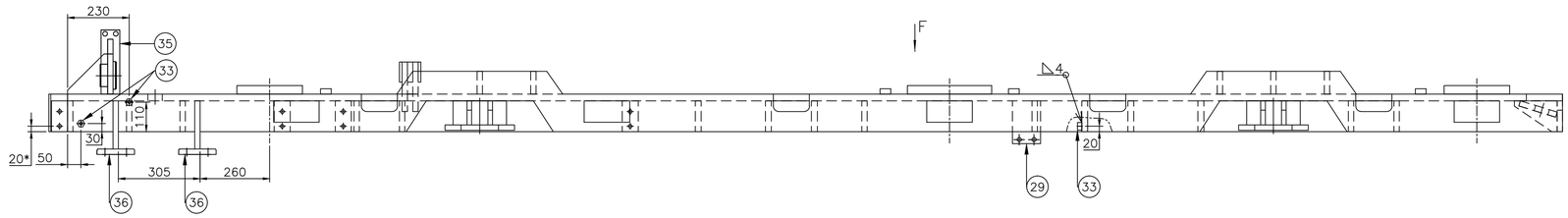

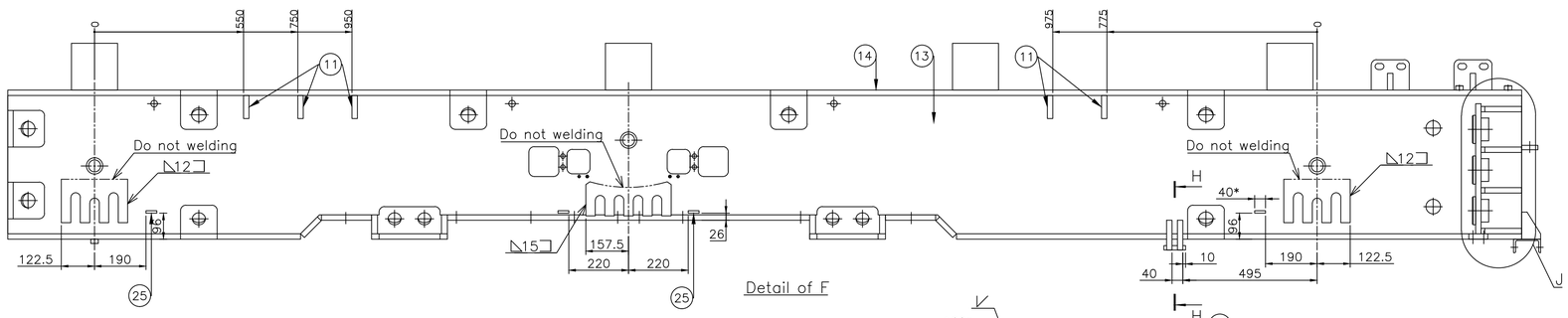

Detail of F

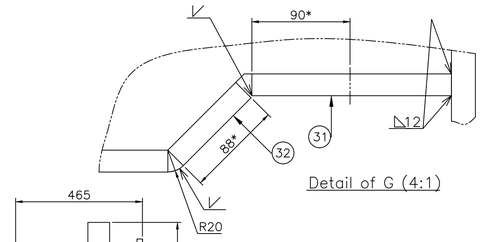

Detail of G (4:1)

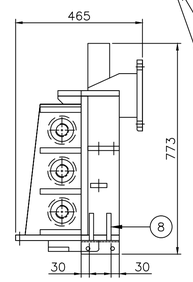

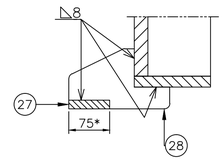

View of H–H(2:1)

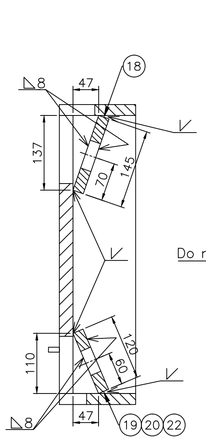

View of A–A(2:1)

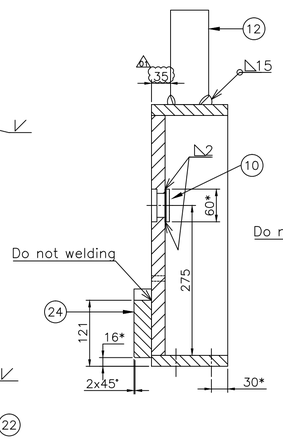

View of B–B(2:1)

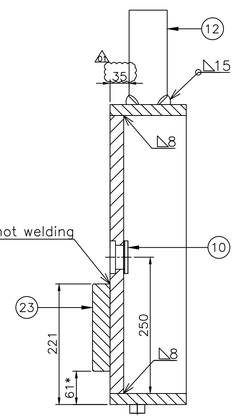

View of C–C(2:1)

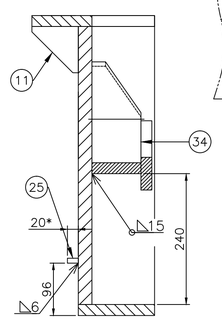

View of D–D(2:1)

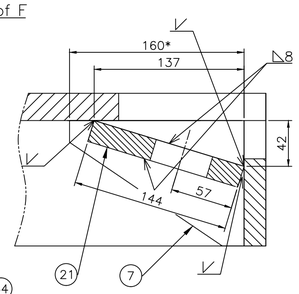

View of E–E(4:1)

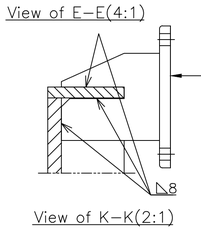

View of K–K(2:1)

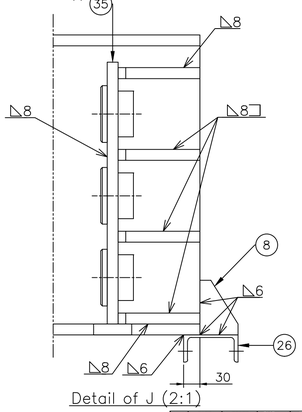

Detail of J (2:1)

NOTES:-

1. FOR DELINKED BOM REFER COMPUTER BOM NO. 14987000021.
2. *REFERENCE DIMENSIONS.
3. ALL SHARP EDGES OF THE YOKE BEAM MAST BE ROUNDED.
4. WELDING OF LOW-MAGNETIC STEEL SHALL BE MADE BY STAINLESS ELECTRODE.
5. SURFACE COATING SHELL BE UNDER CUSTOMER TECHNOLOGICAL INSTRUCTION - OIL PROOF.
6. THE FACE SIDE OF THE GROUNDING PAD DO NOT PAINT.
7. ALL THE RIBS SHALL BE WELDED BY Δ 8.
8. ALL THE ANGLES SHALL BE WELDED BY Δ6.
9. ALL WELD SEAMS, WHICH ARE NOT SPECIFIED, SHALL BE WELDED BY Δ 8.
10. DO NOT PAINT THE BOTTOM FACE OF THE PLATE POS.16 ON THE AREA 140X1332 MM.
11. THE REST OF UNSPECIFIED TECHNICAL REQUIREMENTS SHALL BE IN ACCORDANCE WITH NORMATIVE DOCUMENTS OF CUSTOMER.

Q'TY	NO.	NAME	MATERIAL	DWG. NO. & SPEC MATERIAL CODE	SIZE TxWxL	REMARK
2	38	Rib	SS AA10740	Part 26	22x140x510	
4	37	Plate	MS AA10108	Part 25	16x60x115	
2	36	Bracket		Part 24		
1	35	Bracket		GPT.612001.2082–02		
2	34	Bracket		GPT.612001.2081–09		9,7kg
4	33	Grounding pad	SS AA10740	GPT.612001.2009		
2	32	Plate	SS AA10740		20x88x140	
2	31	Plate	SS AA10740	Part 22	20x140x183	
2	30	Plate	SS AA10740	Part 21	20x140x284	
1	29	Plate	MS AA10108	Part 20	10x105x160	
2	28	Plate	MS AA10108	Part 19	20x110x185	
1	27	Plate	SS AA10740	Part 18	16x75x80	
1	26	Channel	MS AA10108	Part 17	50x100x140	
4	25	Plate	MS AA10108	Part 16	8x20x40	
1	24	Plate	HTS AA10122	Part 15	32x126x315	
2	23	Plate	HTS AA10122	Part 14	32x160x245	
2	22	Plate	SS AA10740	Part 13	20x120x240	
2	21	Plate	MS AA10108	Part 12–04	20xAxC	
1	20	Plate	MS AA10108	Part 12–03	20xAxC	
1	19	Plate	MS AA10108	Part 12–02	20xAxC	
4	18	Plate	MS AA10108	Part 12–01	20xAxC	
1	17	Plate	SS AA10740	Part 11	20x140x2627	
1	16	Plate	SS AA10740	Part 10	20x140x1332	
1	15	Plate	SS AA10740	Part 9	20x140x1622	
1	14	Plate	MS AA10108	Part 8	20x225x5585	
1	13	Plate	MS AA10108	Part 7	25x510x5585	
4	12	Bar	MS AA10108	Part 6	60x150x173	
5	11	Rib	MS AA10108	Part 5	20x85x85	
3	10	Plate	MS AA10113	Part 4		
2	8	Rib	MS AA10108	Part 3–04	20xAxB	
1	7	Rib	MS AA10108	Part 3–03	20xAxB	
2	5	Rib	SS AA10740	Part 3–01	20xAxB	
1	4	Rib	MS AA10108	Part 2	20x115x510	
2	3	Rib	SS AA10740	Part 1–03	Tx115xA	
7	2	Rib	MS AA10108	Part 1–02	Tx115xA	
2	1	Rib	SS AA10740	Part 23	22x140x510	

GPT ASSY. DRG. NO. GPT 612001.2000 | ITEM NO. 35 | GPT DRG. NO. GPT 612001.2090

ADDITIONAL INFORMATION
WO. NO.- 62007-A-512-01

STATUS OF DRAWING U

DISTRIBUTION OF PRINTS
TRE-1, TRM-3
FTM-8

उत्पाद का प्रकार या ग्राहक / परियोजना का नाम
TYPE OF PRODUCT OR NAME OF CUSTOMER/PROJECT
500 MVA, 765/400/33 KV 1 PHASE, AUTO TRANSFORMER
MEGHA ENGG. & INFRA LTD.
TRFR & REACTOR PKG FOR WUPPTCL

भारत हेवी इलेक्ट्रिकल्स लिमिटेड
भोपाल
BHARAT HEAVY ELECTRICALS LTD.
BHOPAL

	नाम/ NAME	हस्ताक्षर/ SIGN	दिनांक/DATE
बनाया DRN.	SKC		30.04.14
देखा CHK.	LALIT		05.05.14
स्वीकृत APPD.	AKP		08.05.14

REV.	DATE	ALTERED	SKC	CHECKED	LK	APPROVED	A.K.P.
03	05.02.16	IT. NO. 012 DIM. UPDATED.					
02	10.11.15	SHEET NO. 03 REVISED.					
01	16.10.14	IT – 12 SIZE CHANGED FROM 80x156x173 TO 60x150x173					

विभाग DEPT. TRE | उप. इकाई, कारा की कैटेगरी UNITSL. DRG. GR. – | अनुपात SCALE | भार WEIGHT KGS 1064 | उप. इकाई का नंबर REF. TO ASSY. DRG. 0 498 70 00002 | मद सं. ITEM NO. 35 | मद संख्या NO. OF ITEM –

कोड CODE 406

शीर्षक/ TITLE
UPPER LV YOKE BEAM

ड्राईंग सं./DRAWING NO.
1 498 70 00021

पुनः/REV 03

पुष्ठ सं./SHT. No. 01 पृष्ठों की संख्या/NO. OF SHT. 03

THE INFORMATION ON THIS DOCUMENT IS THE PROPERTY OF BHARAT HEAVY ELECTRICALS LIMITED
IT MUST NOT BE USED DIRECTLY OR INDIRECTLY IN ANY WAY DETRIMENTAL TO THE INTEREST OF THE COMPANY

INVENTORY NO. | SIGN. & DATE | REF. DRG. NO.

FIRST ANGLE PROJECTION

(ALL DIMENSIONS ARE IN mm)

DRG. NO. 1 498 70 00021

Part.1

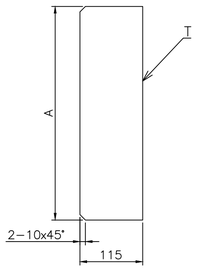

ITEM 02/03

Dimensions, mm

Item no.	Pos.	A	T	Material	Mass,kg
002	–02	510	20	MS AA10108	9,2
003	–03	440	22	SS AA10740	8.7

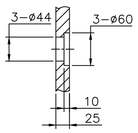

View of A–A

Part.7

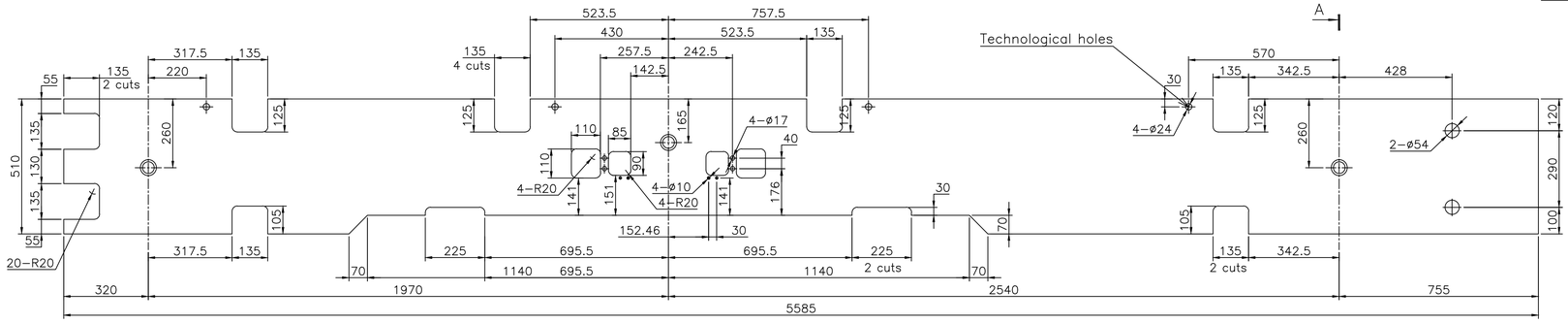

ITEM 13
490 KG

1.Remove all sharp edges of the cuts.

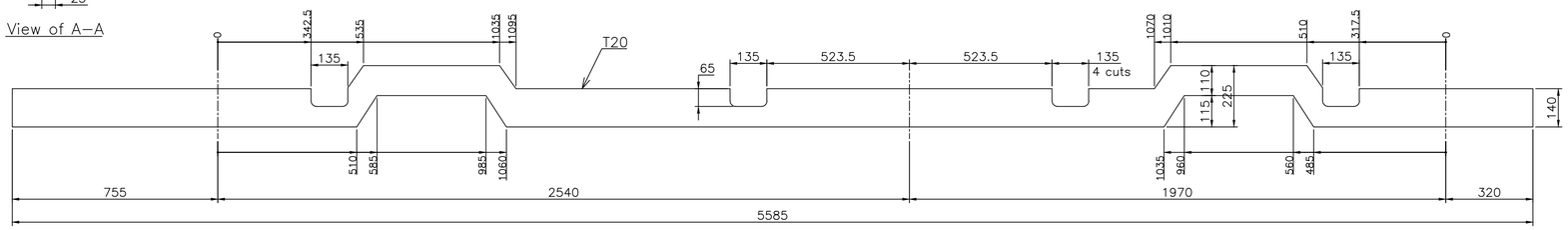

ITEM 14
115 KG

1.Remove all sharp edges of the cuts.

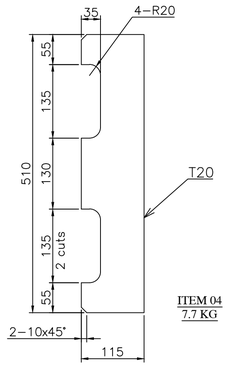

ITEM 04
7.7 KG

1.Remove all sharp edges of the cuts.

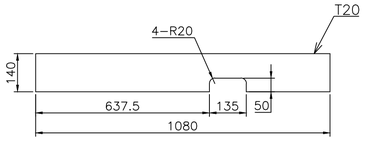

ITEM 15
22.7 KG

1.Remove all sharp edges of the cuts.

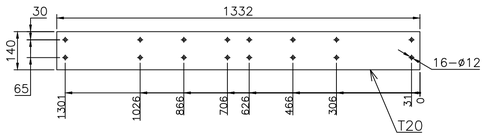

ITEM 16
29.4 KG

1.Remove all sharp edges of the cuts.

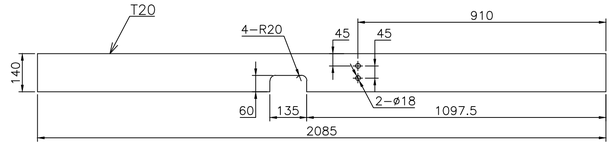

ITEM 17
44.7 KG

1.Remove all sharp edges of the cuts.

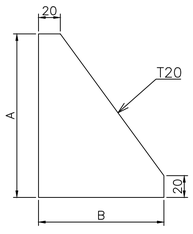

ITEM 05/07/08

Dimensions, mm

Item no.	Pos.	A	B	Material	Mass,kg
005	–01	120	115	SS AA10740	1,42
	–02				
006	–03	160	115	MS AA10108	1.85
007	–04	70	100	MS AA10108	0.79

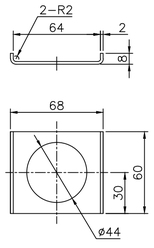

ITEM 10
.04 KG

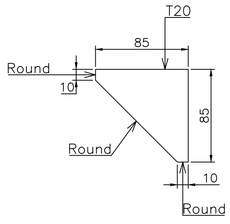

ITEM 11
0.81 KG

1. Round with 3mm radius.

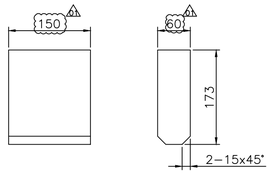

ITEM 12
18.5 KG

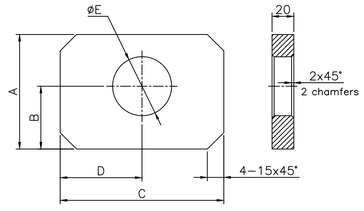

ITEM 18/19 /20/21

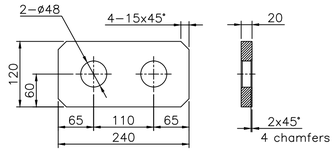

ITEM 22
3.85 KG

Dimensions, mm

Item no.	Pos.	A	B	C	D	E	Mass,kg
018	–01	145	70	150	75	54	3.06
019	–02	120	60	150	75	48	2.49
020	–03	120	60	150	75	54	2.47
021	–04	144	57	245	122.5	54	5.11

GPT ASSY. DRG. NO.	GPT 612001.2000	ITEM NO.	35	GPT DRG. NO.	GPT 612001.2090

ADDITIONAL INFORMATION
WO. NO.- 62007-A-512-01

STATUS OF DRAWING U

DISTRIBUTION OF PRINTS
TRE-1, TRM-3
FTM-8

उत्पाद का प्रकार या ग्राहक / परियोजना का नाम / TYPE OF PRODUCT OR NAME OF CUSTOMER/PROJECT
500 MVA, 765/400/33 KV 1 PHASE, AUTO TRANSFORMER
MEGHA ENGG. & INFRA LTD.
TRFR & REACTOR PKG FOR WUPPTCL

भारत हेवी इलेक्ट्रिकल्स लिमिटेड भोपाल
BHARAT HEAVY ELECTRICALS LTD. BHOPAL

	नाम/ NAME	हस्ताक्षर/ SIGN	दिनांक/DATE
बनाया/ DRN	SKC		30.04.14
जाँचा/ CKD	LALIT		05.05.14
स्वीकृत/ APVD	AKP		08.05.14

REV.	DATE	ALTERED / CHECKED / APPROVED	SKC / LK / A.K.P.
03	05.02.16		
REV.	SHEET NO. 01 REVISED.		
02	10.11.15		
REV.	SHEET NO. 03 REVISED.		
01	16.10.14		
ZONE	IT.– 12 SIZE CHANGED FROM 80x156x173 TO 60x150x173		

विभाग/ DEPT. TRE
केंद्र/ CODE 406
अनु. टी.एल. आर्ट की केवल UNTOL. ENG. GR. –
अनुपात SCALE
भार किलो. WEIGHT KGS. 1064
अनु. टी.एल. REF. TO ASSY. DRG. 0 498 70 00002
मद सं. ITEM NO. 35
मद सैंपल NO. OF ITEM –

शीर्षक/ TITLE
UPPER LV YOKE BEAM

ड्रॉ. नं./DRAWING NO. 1 498 70 00021
पुनः/REV 03
पृष्ठ सं./SHT. No. 02 पृष्ठों की संख्या/NO. OF SHT. 03

THE INFORMATION ON THIS DOCUMENT IS THE PROPERTY OF BHARAT HEAVY ELECTRICALS LIMITED
IT MUST NOT BE USED DIRECTLY OR INDIRECTLY IN ANY WAY DETRIMENTAL TO THE INTEREST OF THE COMPANY

INVENTORY NO. SIGN. & DATE REF. DRG. NO.

FIRST ANGLE PROJECTION

(ALL DIMENSIONS ARE IN mm)

DRG. NO. 1 498 70 00021

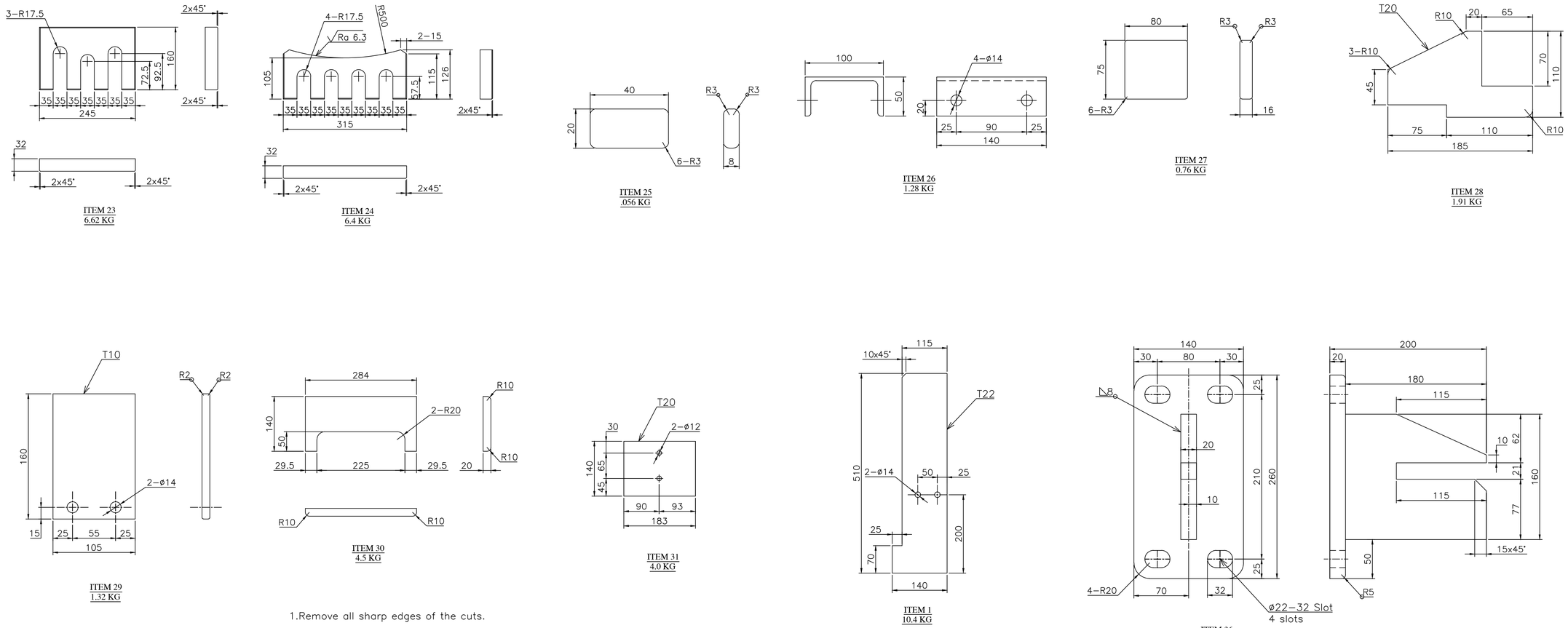

1.Remove all sharp edges of the cuts.

GPT ASSY. DRG. NO.	GPT 612001.2000	ITEM NO.	35	GPT DRG. NO.	GPT 612001.2090

ADDITIONAL INFORMATION
WO. NO.- 62007-A-512-01

STATUS OF DRAWING U

DISTRIBUTION OF PRINTS
TRF-1, TRM-3
FTM-8

उत्पाद का प्रकार या ग्राहक /परियोजना का नाम
TYPE OF PRODUCT OR NAME OF CUSTOMER/PROJECT: 500 MVA, 765/400/33 KV 1 PHASE, AUTO TRANSFORMER
MEGHA ENGG. & INFRA LTD.
TRFR & REACTOR PKG FOR WUPPTCL

भारत हेवी इलेक्ट्रिकल्स लिमिटेड
भोपाल
BHARAT HEAVY ELECTRICALS LTD.
BHOPAL

	नाम/ NAME	हस्ताक्षर/ SIGN	दिनांक/DATE	पृष्ठ सं. NO. OF SHT.
बनाया DRN	SKC		30.04.14	
जाँचा CKD	LALIT		05.05.14	
स्वीकृत APPD	AKP		08.05.14	–

REV.	DATE	ALTERED / CHECKED / APPROVED	SKC / LK / A.K.P.	REMARKS
03	05.02.16			SHEET NO. 01 REVISED.
02	10.11.15			R500 MARKED IN IT.024
01	16.10.14			SHEET 1 & 2 REVISED.

ZONE

टिप्पणी NOTE: टॉल. टॉल. मापन की फेरबदल UNTOL. DIMS. OR –

अनुपात SCALE

भार WEIGHT 1064 KG

ग्रुप/ सूचना का रेफरेंस REF. TO ASSY. DRG. 0 498 70 00002

आइटम ITEM NO. 35

कुल आइटम NO. OF ITEM

शीर्षक/ TITLE: UPPER LV YOKE BEAM

ड्राइंग सं./DRAWING NO. 1 498 70 00021

ड्रा./REV 03

पृष्ठ सं./SHT. No. 03 पृष्ठों की संख्या/NO. OF SHT. 03

THE INFORMATION ON THIS DOCUMENT IS THE PROPERTY OF BHARAT HEAVY ELECTRICALS LIMITED
IT MUST NOT BE USED DIRECTLY OR INDIRECTLY IN ANY WAY DETRIMENTAL TO THE INTEREST OF THE COMPANY

INVENTORY NO. | SIGN. & DATE | REF. DRG. NO.

FIRST ANGLE PROJECTION

(ALL DIMENSIONS ARE IN mm)

DRG. NO. 2 498 70 00016

Q'TY	NO.	NAME	MATERIAL	DWG. NO. & SPEC MATERIAL CODE	SIZE TxWxL	REMARK
1	1	Plate	MS AA10108		20x260x3890	156kg
1	2	Plate	HTS AA10122		28x160x175	4,35kg
1	3	Grounding pad	SS AA10740	GPT.612001.2009		0,05kg

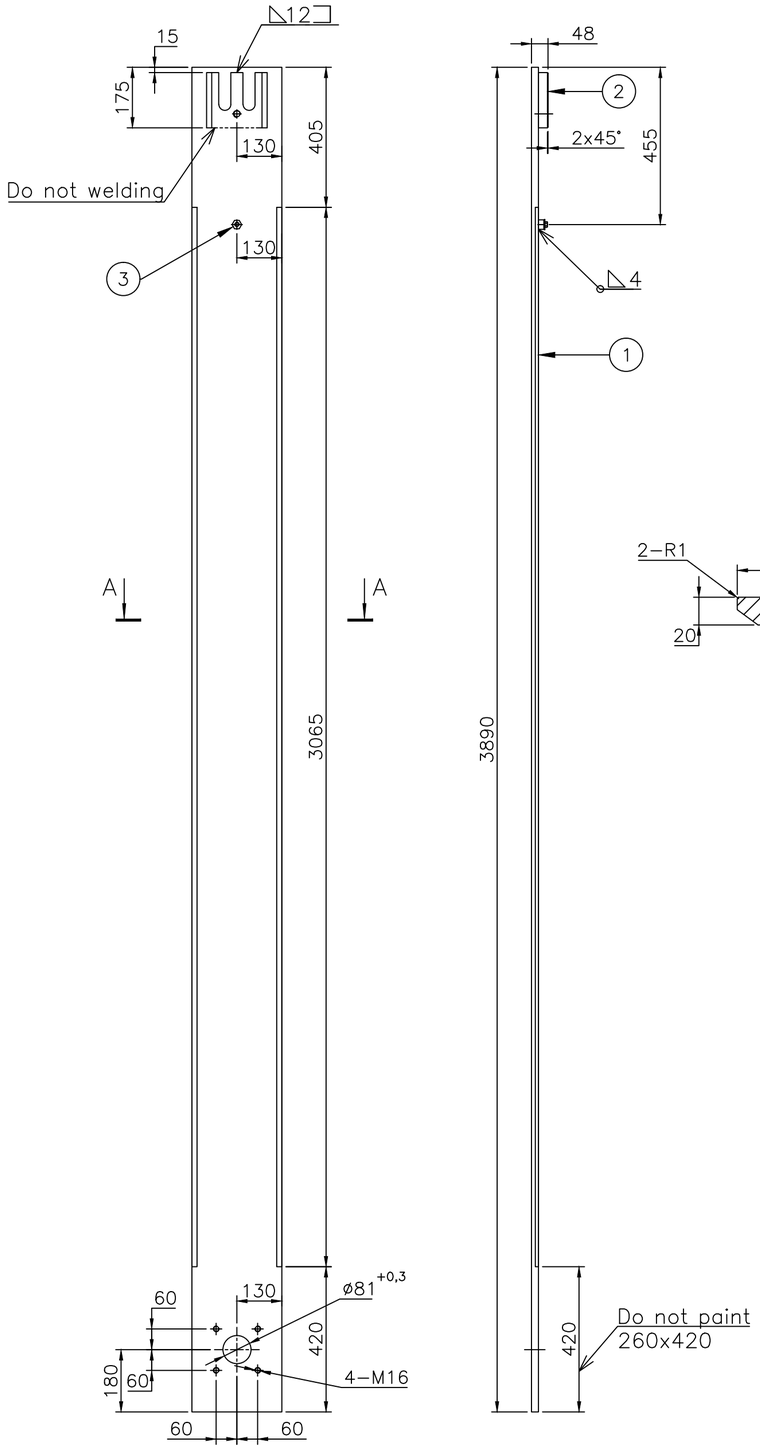

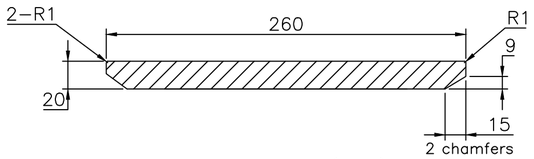

View of A–A(4:1)

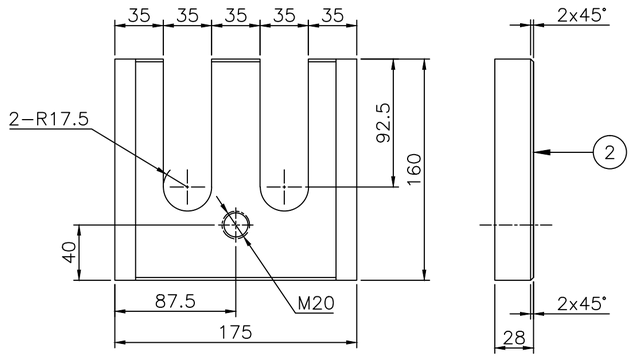

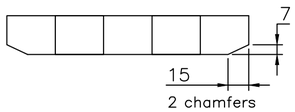

NOTES:-

1. FOR DELINKED BOM REFER COMPUTER BOM NO. 24987000016.
2. SURFACE COATING SHALL BE OIL-PROOF AND APPLIED ACCORDING TO CUSTOMER TECHNOLOGY.
3. THE REST OF UNSPESIFIED TECHNICAL REQUIREMENTS SHALL BE IN ACCORDANCE WITH NORMATIVE DOCUMENTS OF CUSTOMER.

GPT ASSY. DRG. NO.	GPT 612001.2000	ITEM NO.	6	GPT DRG. NO.	GPT 612001.2003

ADDITIONAL INFORMATION
WO. NO.- 62007-A-512-01

STATUS OF DRAWING U

DISTRIBUTION OF PRINTS
TRE-1, TRM-3
FTM-8

उत्पाद का प्रकार या ग्राहक /परियोजना का नाम
TYPE OF PRODUCT OR NAME OF CUSTOMER/PROJECT
500 MVA, 765/400/33 KV 1 PHASE, AUTO TRANSFORMER
MEGHA ENGG. & INFRA LTD.
TRFR & REACTOR PKG FOR WUPPTCL

भारत हेवी इलेक्ट्रिकल्स लिमिटेड भोपाल
BHARAT HEAVY ELECTRICALS LTD. BHOPAL

	नाम/ NAME	हस्ता/ SIGN	दिनांक/DATE	ये पि. की संख्या NO. OF VAR
बनाया DRN	SKC		30.04.14	
जाँचा CKD	LALIT		05.05.14	
स्वीकृत APPD	AKP		08.05.14	-

REV.	DATE	
		ALTERED
		CHECKED
		APPROVED

विभाग DEPT TRE	उन. टान. माप की श्रेणी UNTOL. DIMS. GR. –		उलुपात SCALE	भार कि.ग्रा. WEIGHT (K.G.) 160.4
कोड CODE 406				

उसे. ड्राईंग का संदर्भ REF. TO ASSY. DRG. 0 498 70 00002

मद क्र. ITEM NO. 6

मद संख्या NO. OF ITEM –

शीर्षक/ TITLE
SIDE LOCK PLATE

ड्राईंग क्र./DRAWING NO. 2 498 70 00016

पुन./REV 00

पृष्ठ क्र./SHT. No. 01 पृष्ठों की संख्या/NO. OF SHT. 01

BHARAT HEAVY ELECTRICALS LIMITED

IT MUST NOT BE USED DIRECTLY OR INDIRECTLY IN ANY WAY DETRIMENTAL TO THE INTEREST OF THE COMPANY
THE INFORMATION ON THIS DOCUMENT IS THE PROPERTY OF

INVENTORY NO. | SIGN. & DATE | REF. DRG. NO.

BILL OF MATERIAL	DEP NO	NO OF IT	NO OF VAR	TYPE OF PRODUCT	WORKORDER	DRG NO	CORE CODE	REV
					62007A51201	24987000016	65170704	00
		5	1	500MVA, 765KV 1PH. MEGA	TITLE: SIDE LOCK PLATE H.V.CLAMP PLATE			SHT NO 1 OF 1

DU	VAR03	VAR02	VAR01	VAR00	REMARKS	IT NO	DESCRIPTION / MAT SIZE	DRAWING NO / DETAILS	IT. / VAR	MATCODE / MAT SPEC	A/C	UT	UNIT WT / QTY	G/S / ZONE
				00001	TO DETAIL	001	PLATE TK 20, WDT 260, LEN 3890, ID, OD, DIM1			AA10108		KG	156.000	
				00001	TO DETAIL	002	PLATE TK 28, WDT 160, LEN 175, ID, OD, DIM1			AA10122		KG	4.350	
				00001	TO DETAIL	003	GROUNDING PAD TK, WDT, LEN, ID, OD, DIM1	44987000029	001	AA10740		KG	0.050	

160.4

DISTRIBUTION DETAILS					REV NO. 0	PREP BY	CKD BY	APPD BY	DATE
TRE	TRM				PREP BY	CKD BY	APPD BY	DATE	
1	3				RAH	LK	AKP	24 APR 2014	DRG NO 24987000016 SHT 1 OF 1

FIRST ANGLE PROJECTION

(ALL DIMENSIONS ARE IN mm)

DRG. NO. 2 498 70 00017

Q'TY	NO.	NAME	MATERIAL	DWG. NO. & SPEC MATERIAL CODE	SIZE TxWxL	REMARK
1	1	Plate	Stainless sleel (320–340 mPa) D40S		20x260x3890	156kg
1	2	Plate	HTS AA10122		28x160x175	4,35kg

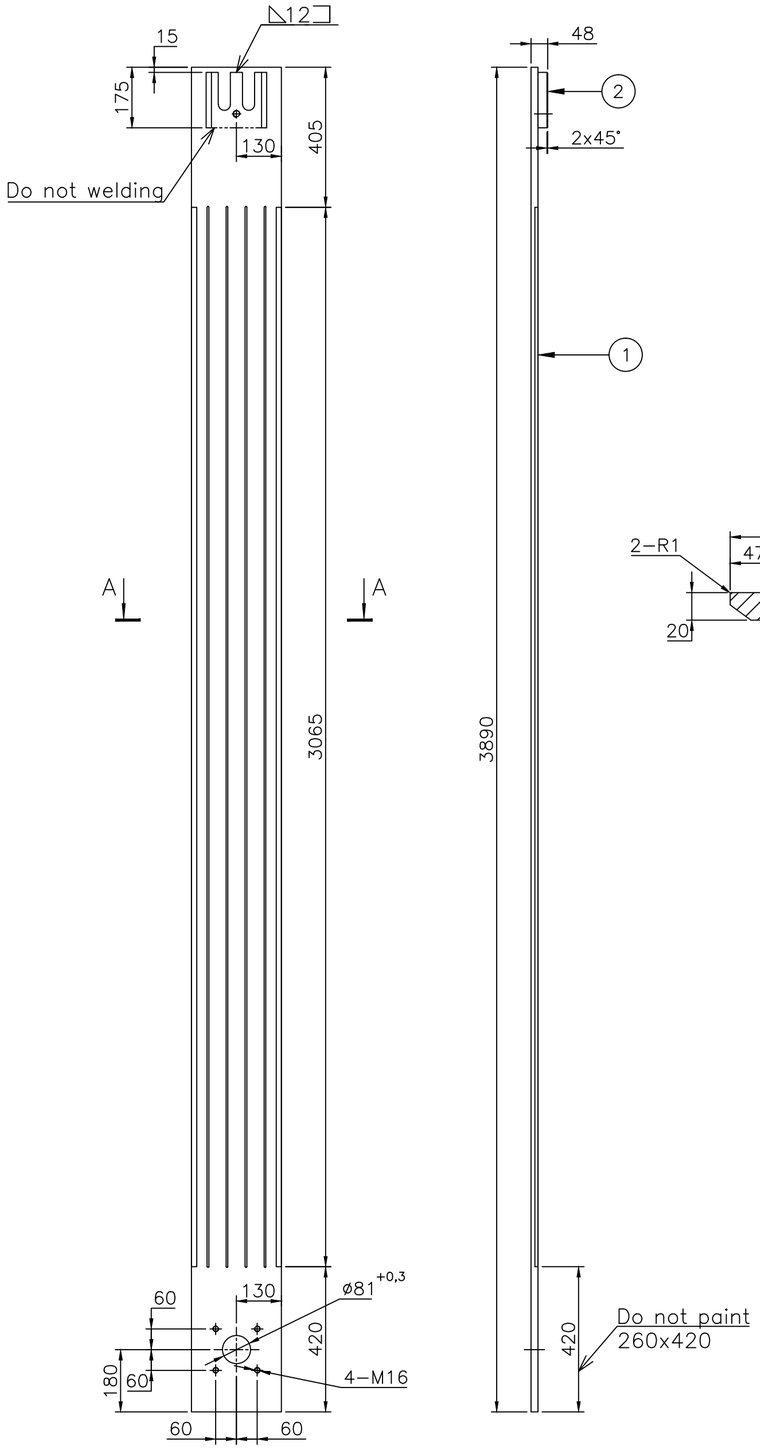

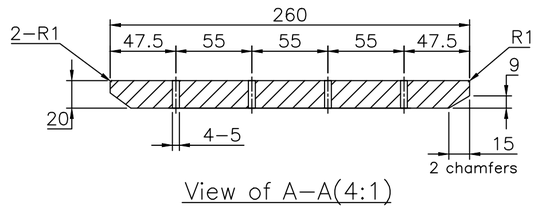

View of A–A(4:1)

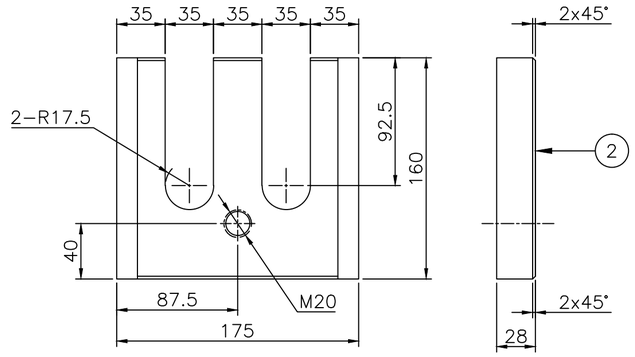

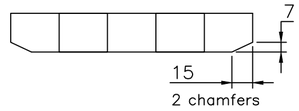

NOTES:-

1. FOR DELINKED BOM REFER COMPUTER BOM NO. 24987000017.
2. SURFACE COATING SHALL BE OIL-PROOF AND APPLIED ACCORDING TO CUSTOMER TECHNOLOGY.
3. THE REST OF UNSPESIFIED TECHNICAL REQUIREMENTS SHALL BE IN ACCORDANCE WITH NORMATIVE DOCUMENTS OF CUSTOMER.

GPT ASSY. DRG. NO.	GPT 612001.2000	ITEM NO.	7	GPT DRG. NO. GPT 612001.2004

ADDITIONAL INFORMATION
WO. NO.- 62007-A-512-01

STATUS OF DRAWING U

DISTRIBUTION OF PRINTS
TRE-1, TRM-3
FTM-8

उत्पाद का प्रकार या ग्राहक /परियोजना का नाम
TYPE OF PRODUCT OR NAME OF CUSTOMER/PROJECT
500 MVA, 765/400/33 KV 1 PHASE, AUTO TRANSFORMER
MEGHA ENGG. & INFRA LTD.
TRFR & REACTOR PKG FOR WUPPTCL

भारत हेवी इलेक्ट्रिकल्स लिमिटेड भोपाल
BHARAT HEAVY ELECTRICALS LTD. BHOPAL

	नाम/ NAME	हस्ता/ SIGN	दिनांक/DATE	रे. की संख्या NO. OF VAR
बनाया DRN	SKC		30.04.14	
जाँचा CKD	LALIT		05.14.14	
स्वीकृत APPD	AKP		08.05.14	–

REV.	DATE	
		ALTERED
		CHECKED
		APPROVED

विभाग DEPT TRE	उन. टान. माप की श्रेणी UNTOL. DIMS. GR. –		उत्पाद SCALE	भार कि.ग्रा. WEIGHT (K.G.) 150.8	उसे. ड्रॉइंग का संदर्भ REF. TO ASSY. DRG. 0 498 70 00002
कोड CODE 406					

मद क. ITEM NO. 7 | मद संख्या NO. OF ITEM –

शीर्षक/ TITLE
SIDE LOCK PLATE

ड्रॉइंग क./DRAWING NO. 2 498 70 00017 | पुन./REV 00

पृष्ठ क./SHT. No. 01 पृष्ठों की संख्या/NO. OF SHT. 01

BHARAT HEAVY ELECTRICALS LIMITED
IT MUST NOT BE USED DIRECTLY OR INDIRECTLY IN ANY WAY DETRIMENTAL TO THE INTEREST OF THE COMPANY
THE INFORMATION ON THIS DOCUMENT IS THE PROPERTY OF

INVENTORY NO. | SIGN. & DATE | REF. DRG. NO.

BILL OF MATERIAL	DEP NO	NO OF IT	NO OF VAR	TYPE OF PRODUCT	WORKORDER	DRG NO	CORE CODE	REV
		5	1	500 MVA,765 KV,1 PH. MEGA	62007A51201	24987000017	65170704	00
					TITLE: SIDE LOCK PLATE H.V.CLAMP PLATE			SHT NO 1 OF 1

DU	VAR03	VAR02	VAR01	VAR00	REMARKS	IT NO	DESCRIPTION / MAT SIZE						DRAWING NO / DETAILS	IT. / VAR	MATCODE / MAT SPEC	A/C	UT	UNIT WT / QTY	G/S / ZONE
				00001	STAINLESS STEEL(320-340MPA)D40S TO DETAIL	001	PLATE										KG	156.000	
							TK	WDT	LEN	ID	OD	DIM1							
							20	260	3890										
				00001	TO DETAIL	002	PLATE										KG	4.350	
							TK	WDT	LEN	ID	OD	DIM1			AA10122				
							28	160	175										

160.35

DISTRIBUTION DETAILS					REV NO. 0	PREP BY	CKD BY	APPD BY	DATE
TRE	TRM				PREP BY	CKD BY	APPD BY	DATE	
1	3				RT	LK	AKP	24 APR 2014	DRG NO 24987000017 SHT 1 OF 1

BILL OF MATERIAL	DEP NO	NO OF IT	NO OF VAR	TYPE OF PRODUCT	WORKORDER	DRG NO	CORE CODE	REV
					62007A51201	24987000018	65170704	00
		5	1	500 MVA,765KV , 1PH. MEGA	TITLE: MAIN LOCK PLATE H.V.CLAMP PLATE			SHT NO 1 OF 1

DU	VAR03	VAR02	VAR01	VAR00	REMARKS	IT NO	DESCRIPTION / MAT SIZE	DRAWING NO / DETAILS	IT. / VAR	MATCODE / MAT SPEC	A/C	UT	UNIT WT / QTY	G/S / ZONE
				00001	STAINLESS STEEL(320-340MPA)D40S TO DETAIL	001	PLATE TK 20, WDT 400, LEN 4005, ID, OD, DIM1			D40S		KG	192.000	
				00001		002	PLATE TK 25, WDT 160, LEN 245, ID, OD, DIM1			AA10122		KG	5.300	
				00002	GPT.612001.2009	003	GROUNDING PAD TK, WDT, LEN, ID, OD, DIM1	44987000029		AA10740		KG	0.050	

197.4

DISTRIBUTION DETAILS					REV NO. 0	PREP BY	CKD BY	APPD BY	DATE
		TRE	TRM		PREP BY	CKD BY	APPD BY	DATE	
		1	3		RAH	LK	AKP	24 APR 2014	DRG NO 24987000018 SHT 1 OF 1

BILL OF MATERIAL	DEP NO	NO OF IT	NO OF VAR	TYPE OF PRODUCT	WORKORDER	DRG NO	CORE CODE	REV
					62007A51201	24987000018	65170704	00
		5	1	500 MVA,765KV , 1PH. MEGA	TITLE: MAIN LOCK PLATE H.V.CLAMP PLATE			SHT NO 1 OF 1

DU	VAR03	VAR02	VAR01	VAR00	REMARKS	IT NO	DESCRIPTION / MAT SIZE	DRAWING NO / DETAILS	IT. / VAR	MATCODE / MAT SPEC	A/C	UT	UNIT WT / QTY	G/S / ZONE
				00001	STAINLESS STEEL(320-340MPA)D40S TO DETAIL	001	PLATE TK 20, WDT 400, LEN 4005, ID, OD, DIM1			D40S		KG	192.000	
				00001		002	PLATE TK 25, WDT 160, LEN 245, ID, OD, DIM1			AA10122		KG	5.300	
				00002	GPT.612001.2009	003	GROUNDING PAD TK, WDT, LEN, ID, OD, DIM1	44987000029		AA10740		KG	0.050	

197.4

DISTRIBUTION DETAILS					REV NO. 0	PREP BY	CKD BY	APPD BY	DATE
		TRE	TRM		PREP BY	CKD BY	APPD BY	DATE	
		1	3		RAH	LK	AKP	24 APR 2014	DRG NO 24987000018 SHT 1 OF 1

FIRST ANGLE PROJECTION

(ALL DIMENSIONS ARE IN mm)

DRG. NO. 2 498 70 00019

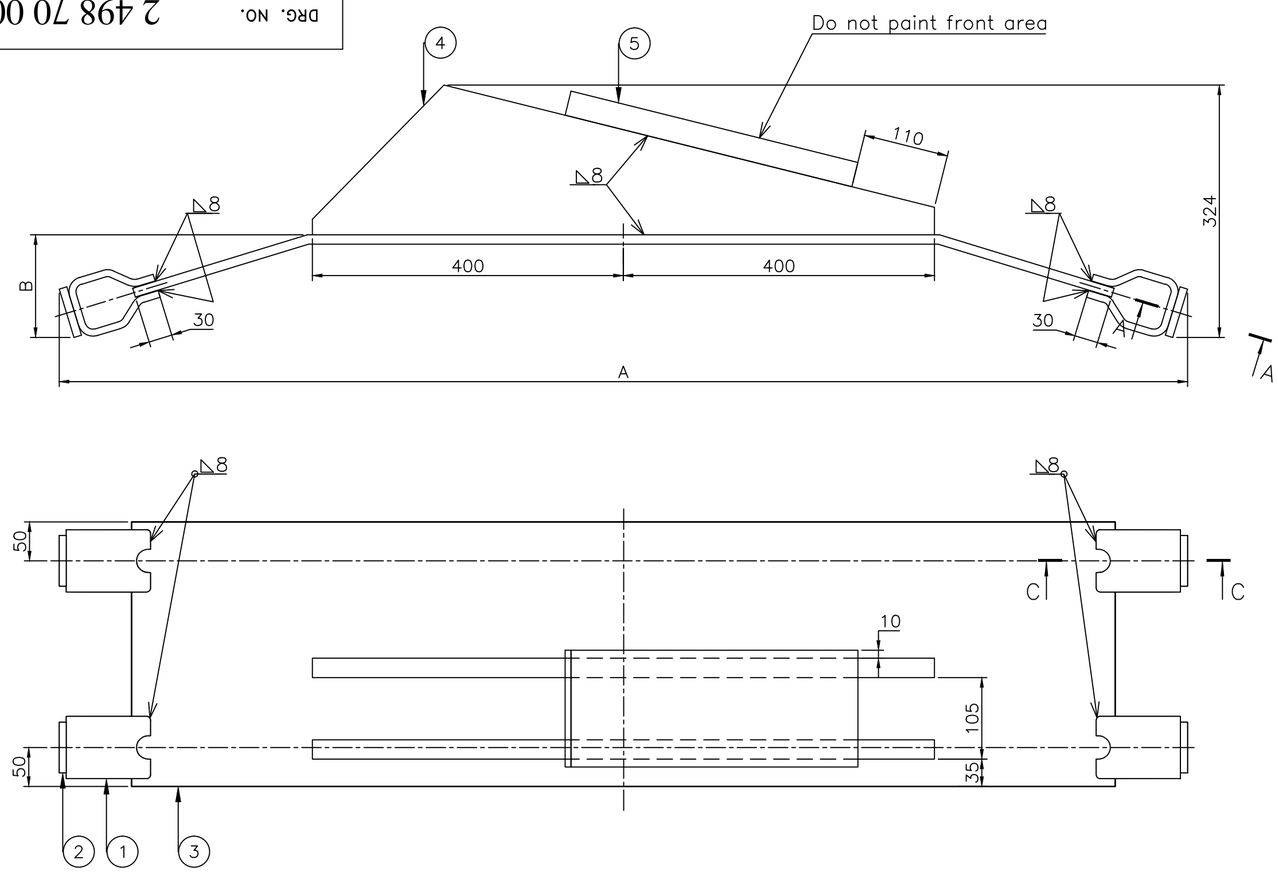

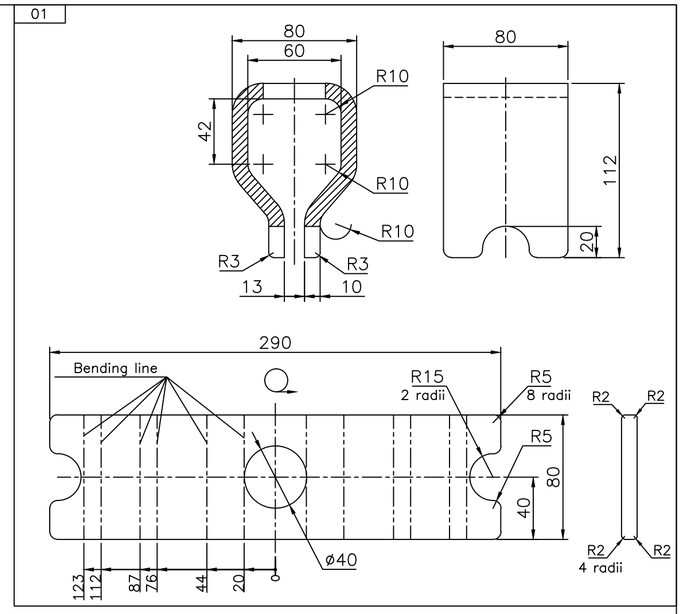

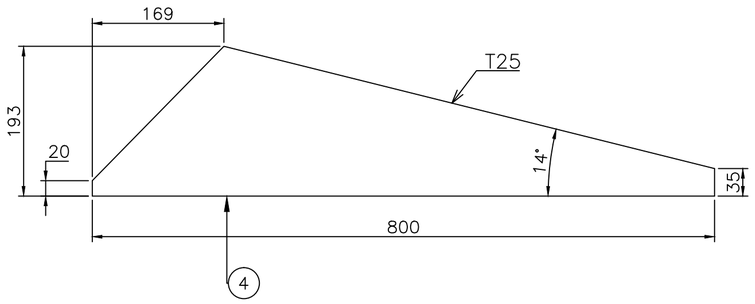

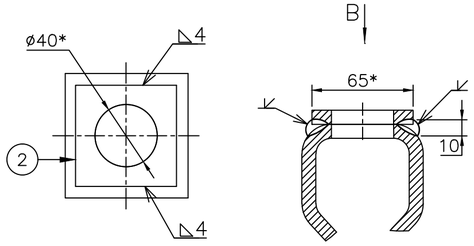

View of B

View of A–A

NOTES:-

1. FOR DELINKED BOM REFER COMPUTER BOM NO. 24987000019.
2. SURFACE COATING SHALL BE OIL-PROOF AND APPLIED ACCORDING TO CUSTOMER TECHNOLOGY.
3. THE REST OF UNSPESIFIED TECHNICAL REQUIREMENTS SHALL BE IN ACCORDANCE WITH NORMATIVE DOCUMENTS OF CUSTOMER.

Q'TY	NO.	NAME	MATERIAL	DWG. NO. & SPEC MATERIAL CODE	SIZE TxWxL	REMARK
1	5	Plate	MS AA10108		32 x 150 x 380	14,4kg
2	4	Plate	HTS AA10122		25 x 193 x 800	17,7kg
1	3	Plate	HTS AA10122			
4	2	Plate	MS AA10108		10 x 65 x 65	0,23kg
4	1	Clamp	HTS AA10122		10 x 80 x 290	1,61kg

Var.	Pos.	A	B	C	D	E	F	G	T	Mass,kg	Location
00	–01	1451	132	230	17	804	80	340	12	98	bottom yoke

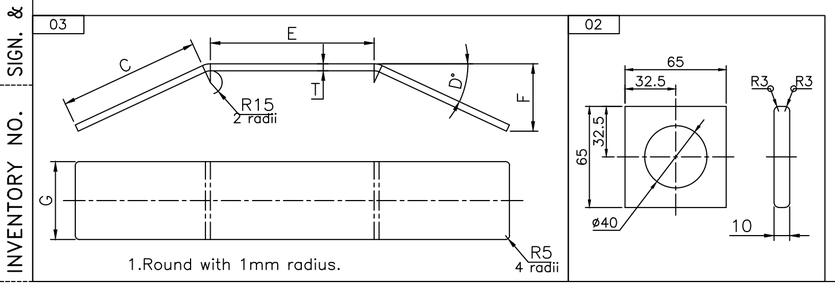

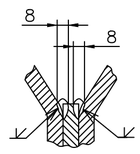

View of C–C

GPT ASSY. DRG. NO.	GPT 612001.2000	ITEM NO. 9	GPT DRG. NO. GPT 612001.2006
ADDITIONAL INFORMATION WO. NO.- 62007-A-512-01	उत्पाद का प्रकार या सहायक /परियोजना का नाम TYPE OF PRODUCT OR NAME OF CUSTOMER/PROJECT	500 MVA, 765/400/33 KV 1 PHASE, AUTO TRANSFORMER MEGHA ENGG. & INFRA LTD. TRFR & REACTOR PKG FOR WUPPTCL	
STATUS OF DRAWING U			
DISTRIBUTION OF PRINTS TRE-1, TRM-3 FTM-8	भारत हेवी इलेक्ट्रिकल्स लिमिटेड भोपाल BHARAT HEAVY ELECTRICALS LTD. BHOPAL		

	नाम/ NAME	हस्ता/ SIGN	दिनांक/DATE	ये.रि. की संख्या NO. OF VAR
बनाया DRN	SKC		30.04.14	
जाँचा CKD	LALIT		05.05.14	
स्वीकृत APPD	AKP		08.05.14	–

REV.	DATE	ALTERED / CHECKED / APPROVED

विभाग DEPT TRE	उन. टान. नाप की त्रुटि UNTOL. DIMS. GR. –		उनुपात SCALE	भार कि.ग्रा. WEIGHT (K.G.) 98.0	उसे. ड्राईंग का संदर्भ REF. TO ASSY. DRG. 0 498 70 00002
लोड CODE 406					

शीर्षक/ TITLE BOTTOM SIDE BEND	ड्राईंग क्र./DRAWING NO. 2 498 70 00019	मद क्र. ITEM NO. 9
	पृष्ठ क्र./SHT. No. 01 पृष्ठों की संख्या/NO. OF SHT. 01	पुन./REV 00

THE INFORMATION ON THIS DOCUMENT IS THE PROPERTY OF BHARAT HEAVY ELECTRICALS LIMITED
IT MUST NOT BE USED DIRECTLY OR INDIRECTLY IN ANY WAY DETRIMENTAL TO THE INTEREST OF THE COMPANY

INVENTORY NO. | SIGN. & DATE | REF. DRG. NO.

BILL OF MATERIAL	DEP NO	NO OF IT	NO OF VAR	TYPE OF PRODUCT	WORKORDER	DRG NO	CORE CODE	REV
		7	1	500MVA,765 KV, 1PH. MEGA	62007A51201	24987000019	65370809	00
					TITLE: BOTTOM SIDE BAND END TIE PLATE			SHT NO 1 OF 1

DU	VAR03	VAR02	VAR01	VAR00	REMARKS	IT NO	DESCRIPTION / MAT SIZE	DRAWING NO / DETAILS	IT. / VAR	MATCODE / MAT SPEC	A/C	UT	UNIT WT / QTY	G/S / ZONE
				00004	TO DETAIL	001	CLAMP TK 10, WDT 80, LEN 290, ID, OD, DIM1			AA10122		KG	1.610	
				00004	TO DETAIL	002	PLATE TK 10, WDT 65, LEN 65, ID, OD, DIM1			AA10108		KG	0.230	
				00001	TO DETAIL SEE TABLE FOR DIM.	003	PLATE TK, WDT, LEN, ID, OD, DIM1			AA10122		KG	98.000	
				00002	TO DETAIL	004	PLATE TK 25, WDT 193, LEN 800, ID, OD, DIM1			AA10122		KG	17.700	
				00001	TO DETAIL	005	PLATE TK 32, WDT 150, LEN 380, ID, OD, DIM1			AA10108		KG	14.400	

155.16

DISTRIBUTION DETAILS					REV NO. 0	PREP BY	CKD BY	APPD BY	DATE
TRE	TRM	FTM			PREP BY	CKD BY	APPD BY	DATE	
1	3	8			KVA	LK	AKP	24 APR 2014	DRG NO 24987000019 SHT 1 OF 1

FIRST ANGLE PROJECTION

(ALL DIMENSIONS ARE IN mm)

DRG. NO. 2 498 70 00020

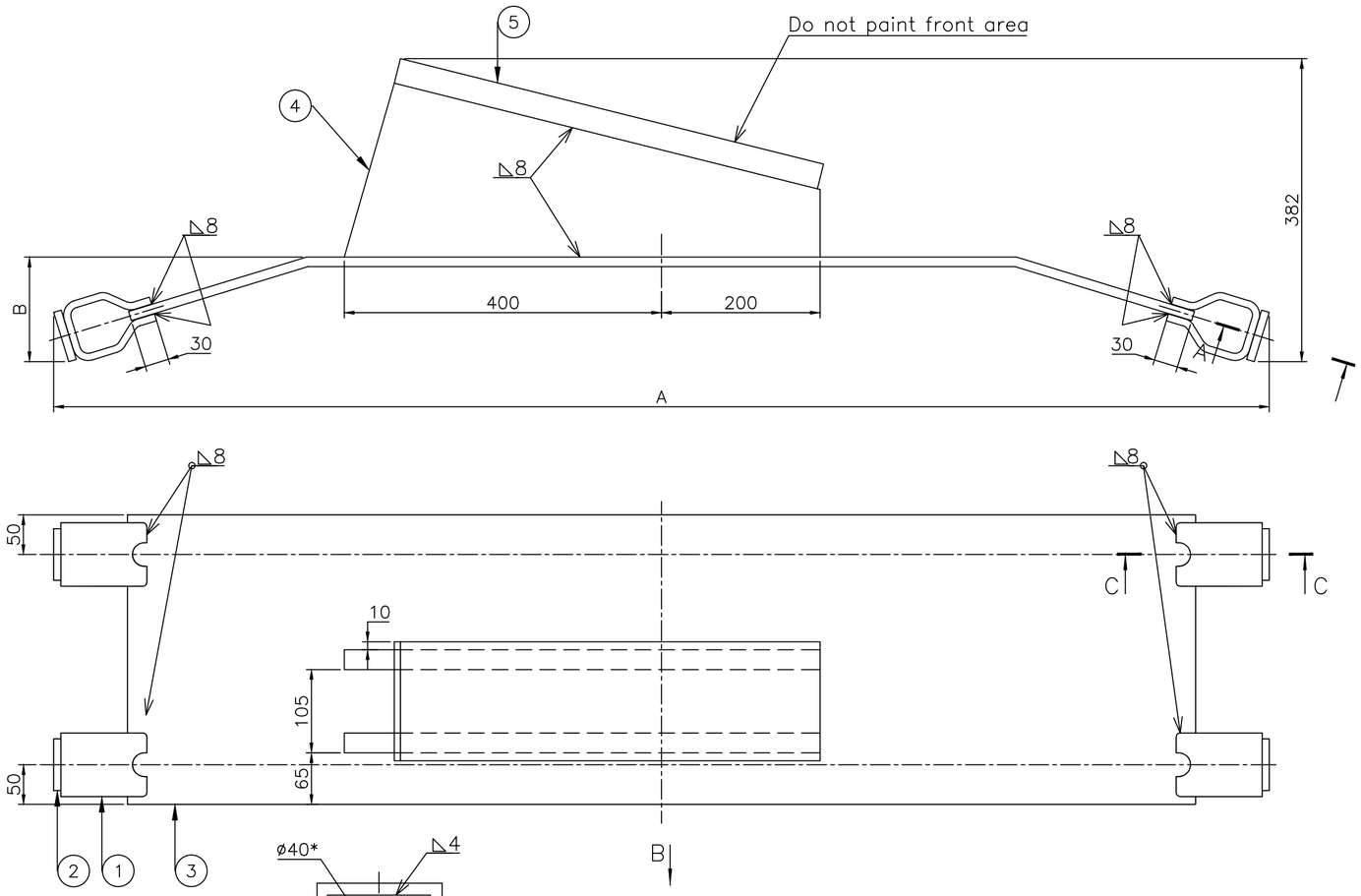

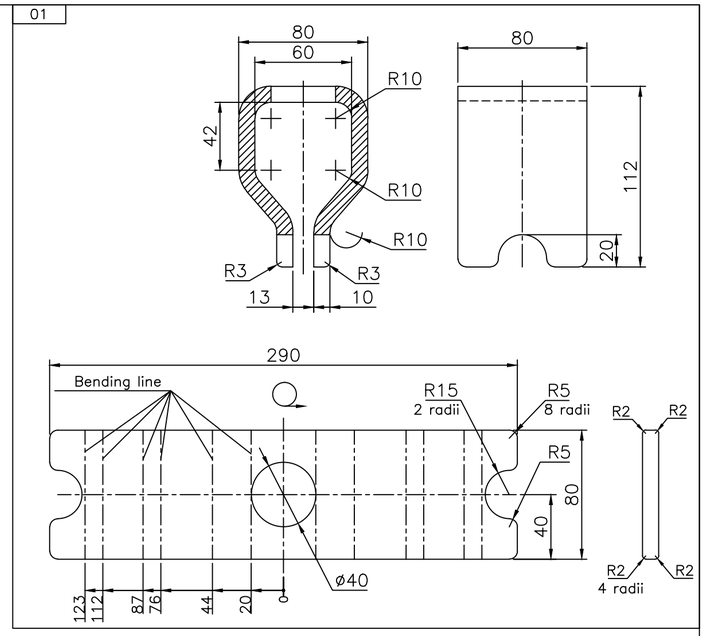

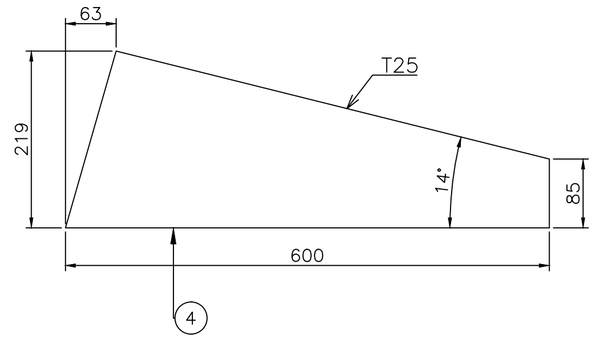

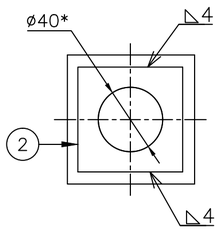

View of B

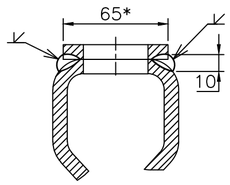

View of A–A

NOTES:-

1. FOR DELINKED BOM REFER COMPUTER BOM NO. 24987000020.
2. * REFERENCE DIMENSIONS.
3. SURFACE COATING SHALL BE OIL-PROOF AND APPLIED ACCORDING TO CUSTOMER TECHNOLOGY.
4. THE REST OF UNSPESIFIED TECHNICAL REQUIREMENTS SHALL BE IN ACCORDANCE WITH NORMATIVE DOCUMENTS OF CUSTOMER.

Var.	Pos.	A	B	C	D	E	F	G	T	Mass,kg	Location
00	–01	1524	132	230	17	886	80	365	12	109	top yoke

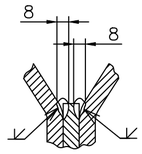

View of C–C

Q'TY	NO.	NAME	MATERIAL	DWG. NO. & SPEC MATERIAL CODE	SIZE TxWxL	REMARK
1	5	Plate	MS AA10108		32 x 150 x 550	20,8kg
2	4	Plate	HTS AA10122		25 x 219 x 600	17,4kg
1	3	Plate	HTS AA10122			
4	2	Plate	MS AA10108		10 x 65 x 65	0,23kg
4	1	Clamp	HTS AA10122		10 x 80 x 290	1,61kg

GPT ASSY. DRG. NO.	GPT 612001.2000	ITEM NO.	10	GPT DRG. NO.	GPT 612001.2007

ADDITIONAL INFORMATION
WO. NO.- 62007-A-512-01

STATUS OF DRAWING U

DISTRIBUTION OF PRINTS
TRE-1, TRM-3
FTM-8

उत्पाद का प्रकार या ग्राहक /परियोजना का नाम
TYPE OF PRODUCT OR NAME OF CUSTOMER/PROJECT
500 MVA, 765/400/33 KV 1 PHASE, AUTO TRANSFORMER
MEGHA ENGG. & INFRA LTD.
TRFR & REACTOR PKG FOR WUPPTCL

भारत हेवी इलेक्ट्रिकल्स लिमिटेड भोपाल
BHARAT HEAVY ELECTRICALS LTD. BHOPAL

	नाम/ NAME	हस्ता/ SIGN	दिनांक/DATE	वे.रि. की संख्या NO. OF VAR
बनाया DRN	SKC		30.04.14	-
जाँचा CKD	LALIT		05.05.14	
स्वीकृत APPD	AKP		08.05.14	

REV.	DATE	
		ALTERED
		CHECKED
		APPROVED

विभाग DEPT	उन. टा. नाप की श्रेणी UNTOL. DIMS. GR.		उनुपात SCALE	भार कि.ग्रा. WEIGHT (K.G.)	उसे. ड्राईंग का संदर्भ REF. TO ASSY. DRG.	मद क्र. ITEM NO.	मद संख्या NO. OF ITEM
TRE	–			109	0 498 70 00002	10	-
कोड CODE 406							

शीर्षक/ TITLE
TOP SIDE BAND

ड्राईंग क्र./DRAWING NO. 2 498 70 00020
पुन./REV 00

पृष्ठ क्र./SHT. No. 01 पृष्ठों की संख्या/NO. OF SHT. 01

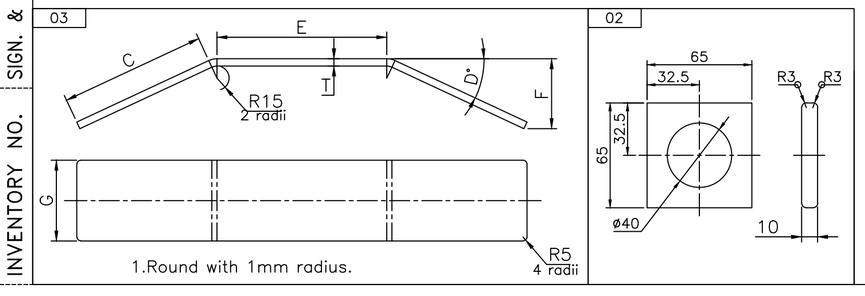

THE INFORMATION ON THIS DOCUMENT IS THE PROPERTY OF BHARAT HEAVY ELECTRICALS LIMITED
IT MUST NOT BE USED DIRECTLY OR INDIRECTLY IN ANY WAY DETRIMENTAL TO THE INTEREST OF THE COMPANY

REF. DRG. NO.
SIGN. & DATE
INVENTORY NO.

BILL OF MATERIAL	DEP NO	NO OF IT	NO OF VAR	TYPE OF PRODUCT	WORKORDER	DRG NO	CORE CODE	REV
					62007A51201	24987000020	65370809	00
		6	1	500 MVA,765 KV, 1PH. MEGA	TITLE: TOP SIDE BAND END TIE PLATE			SHT NO 1 OF 1

DU	VAR03	VAR02	VAR01	VAR00	REMARKS	IT NO	DESCRIPTION / MAT SIZE	DRAWING NO / DETAILS	IT. / VAR	MATCODE / MAT SPEC	A/C	UT	UNIT WT / QTY	G/S / ZONE
				00004	TO DETAIL	001	CLAMP TK 10, WDT 80, LEN 290, ID, OD, DIM1			AA10122		KG	1.610	
				00004	TO DETAIL	002	PLATE TK 10, WDT 65, LEN 65, ID, OD, DIM1			AA10108		KG	0.230	
				00001	TO DETAIL SEE TABLE FOR DIM.	003	PLATE TK, WDT, LEN, ID, OD, DIM1			AA10122		KG	109.000	
				00002	TO DETAIL	004	PLATE TK 25, WDT 219, LEN 660, ID, OD, DIM1			AA10122		KG	17.400	
				00001	TO DETAIL	005	PLATE TK 32, WDT 150, LEN 550, ID, OD, DIM1			AA10108		KG	20.800	

171.96

DISTRIBUTION DETAILS					REV NO. 0	PREP BY	CKD BY	APPD BY	DATE
TRE	TRM	FTM			PREP BY	CKD BY	APPD BY	DATE	
1	3	8			RT	LK	AKP	24 APR 2014	DRG NO 24987000020 SHT 1 OF 1

BILL OF MATERIAL	DEP NO	NO OF IT	NO OF VAR	TYPE OF PRODUCT	WORKORDER	DRG NO	CORE CODE	REV
		7	1	500MVA,765KV,1PH. MEGA	62007A51201	24987000021	65170750	01
					TITLE: LOCK WASHER LOCKING PLATE S			SHT NO 1 OF 1

DU	VAR03	VAR02	VAR01	VAR00	REMARKS	IT NO	DESCRIPTION / MAT SIZE	DRAWING NO / DETAILS	IT. VAR	MATCODE / MAT SPEC	A/C	UT	UNIT WT / QTY	G/S / ZONE
				00001	TODETAIL SEE TABLE	001	PLATE TK WDT LEN ID OD DIM1			AA10115		KG	0.047	
				00001	TO DETAIL SEE TABLE	002	PLATE TK WDT LEN ID OD DIM1			AA10115		KG	0.049	
				00001	TO DETAIL SEE TABLE	003	DISK TK WDT LEN ID OD DIM1			AA10108		KG	0.230	
			00001		TO DETAIL SEE TABLE	004	PLATE TK WDT LEN ID OD DIM1			BP1011715970 AA10115		KG	0.045	
			00001		TO DETAIL SEE TABLE	005	PLATE TK WDT LEN ID OD DIM1			AA10115		KG	0.048	
			00001		TO DETAIL SEE TABLE	006	DISK TK WDT LEN ID OD DIM1			AA10108		KG	0.250	

.343 .326

DISTRIBUTION DETAILS					REV NO. 1	PREP BY	CKD BY	APPD BY	DATE 25 MAY 2015
TRE	TRM	FTM			PREP BY	CKD BY	APPD BY	DATE	
1	3	8			KVA	LK	AKP	24 APR 2014	DRG NO 24987000021 SHT 1 OF 1

FIRST ANGLE PROJECTION

ALL DIMENSIONS ARE IN mm

DRG. NO. 2 498 70 00021

THE INFORMATION ON THIS DOCUMENT IS THE PROPERTY OF BHARAT HEAVY ELECTRICALS LIMITED.
IT MUST NOT BE USED DIRECTLY OR INDIRECTLY IN ANY WAY DETRIMENTAL TO THE INTEREST OF THE COMPANY.

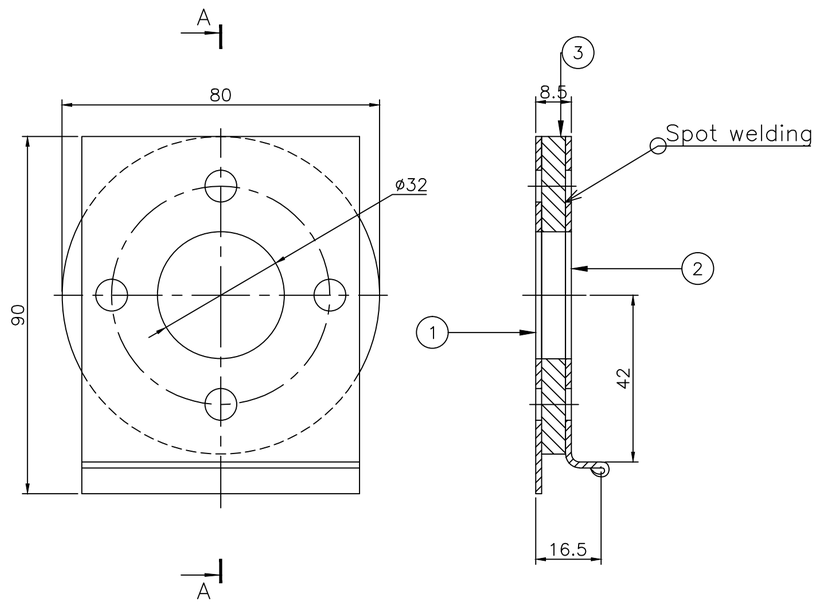

View of A – A

VAR 00

GPT.612006.2010–01

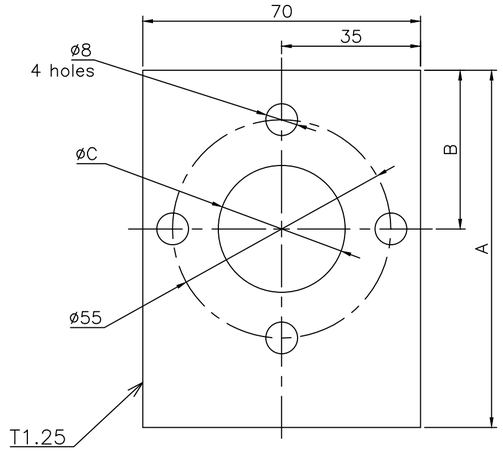

It. no	Pos.	A	B	C
001	–01	90	40	32
004	–04	100	45	38

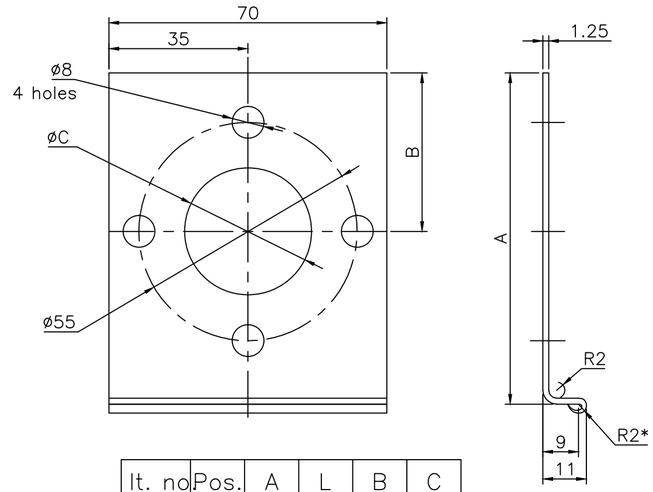

It. no	Pos.	A	L	B	C
002	–02	83	100	40	32
005	–05	93	110	45	38

Description	Mass, kg	Remark
GPT.612001.2010–01	0,326	M30
GPT.612001.2010–02	0,343	M36

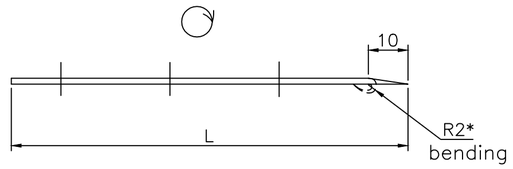

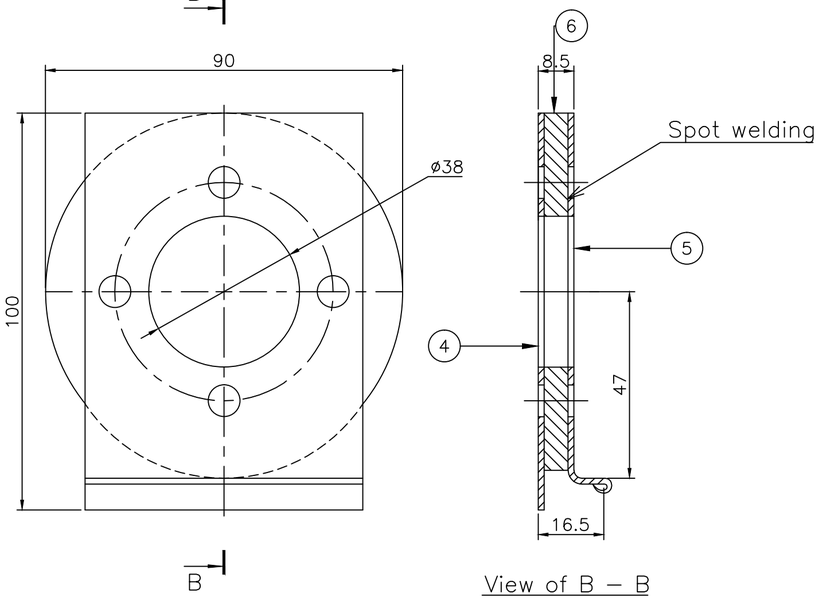

View of B – B

VAR 01

GPT.612006.2010–02

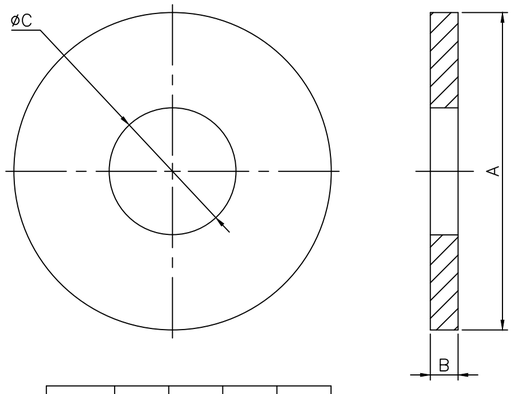

It. no.	Pos.	A	B	C
003	–03	80	6	32
006	–06	90	6	38

1)- FOR DELINKED BOM REFER COMPUTER BOM NO. 24987000021.
2)- SURFACE COATING SHALL BE ZPP AS PER TR10017P CLAUSE 4.
3)- DIMENSIONS AND TOLERANCES IS TO BE AS PER IS:2016 :-67.
4)- TC FOR MECHANICAL AND CHEMICAL PROPERTIES AND ZPP SHALL BE FURNISHED.
5)- FOR DELINKED BOM REFER COMPUTER BOM NO. 24987000021.

Q'TY	NO.	NAME	MATERIAL	DWG. NO. & SPEC MATERIAL CODE	SIZE TxWxL	REMARK
1	6	Disk	MS AA10108			0,25kg
1	5	Plate	MS AA10115			0,048kg
1	4	Plate	MS AA10115			0,045kg
				GPT.612001.2010–02		
				Variable data		
1	3	Disk	MS AA10108			0,23kg
1	2	Plate	MS AA10115			0,049kg
1	1	Plate	MS AA10115			0,047kg
				GPT.612001.2010–01		
				Variable data		

GPT ASSY. DRG. NO.	GPT 612001.2000	ITEM NO.	012 & 013	GPT DRG. NO.	GPT 612001.2010–01

ADDITIONAL INFORMATION
WO. NO.- 62007-A-512-01

STATUS OF DRAWING U

DISTRIBUTION OF PRINTS
TRE-1, TRM-3
FTM-8

उत्पाद का प्रकार या ग्राहक /परियोजना का नाम
TYPE OF PRODUCT OR NAME OF CUSTOMER/PROJECT
500 MVA, 765/400/33 KV 1 PHASE, AUTO TRANSFORMER
MEGHA ENGG. & INFRA LTD.
TRFR & REACTOR PKG FOR WUPPTCL

बीएचईएल BHEL
भारत हेवी इलेक्ट्रिकल्स लिमिटेड
भोपाल
BHARAT HEAVY ELECTRICALS LTD.
BHOPAL

	नाम/ NAME	हस्ता/ SIGN	दिनांक/DATE	वे.दि. की संख्या NO. OF VAR
बनाया DRN	SKC		30.04.14	–
जाँचा CKD	LALIT		05.05.14	
स्वीकृत APPD	AKP		08.05.14	

REV.	DATE			
01	23/05/15	ALTERED	SKC	
		CHECKED	LALIT	
		APPROVED	AKP	

NOTES 2 TO 4 CHANGED.

विभाग DEPT TRE
कोड CODE 406
उन. टान. नाप की त्रेपी UNTOL.DIMS. GR. –
उलुपात SCALE
भार WEIGHT (K.G.)
उसे. ड्राईंग का संदर्भ REF. TO ASSY. DRG. 0 498 70 00002
मद क्र. ITEM NO. 12,13
मद संख्या NO. OF ITEM –

शीर्षक/ TITLE
LOCK WASHER

ड्राईंग क्र./DRAWING NO. 2 498 70 00021
पुन./REV 01
पृष्ठ क्र./SHT. No. 01
पृष्ठों की संख्या/NO. OF SHT. 01

A2

BILL OF MATERIAL	DEP NO	NO OF IT	NO OF VAR	TYPE OF PRODUCT	WORKORDER	DRG NO	CORE CODE	REV
		6	1	500MVA,765KV,1PH. MEGA	62007A51201	24987000022	65370809	01
					TITLE: TOP SIDE BEAM END TIE PLATE			SHT NO 1 OF 1

DU	VAR03	VAR02	VAR01	VAR00	REMARKS	IT NO	DESCRIPTION / MAT SIZE	DRAWING NO / DETAILS	IT. / VAR	MATCODE / MAT SPEC	A/C	UT	UNIT WT / QTY	G/S / ZONE
				00002	TO DETAIL	001	PLATE TK 20, WDT 140, LEN 490, ID, OD, DIM1			AA10740		KG	10.800	
				00003	TO DETAIL	002	PLATE TK 25, WDT 140, LEN 1400, ID, OD, DIM1			AA10740		KG	38.500	
				00002	TO DETAIL	003	PLATE TK 20, WDT 130, LEN 490, ID, OD, DIM1			AA10740		KG	10.000	
				00001		004	PLATE TK 20, WDT 490, LEN 1420, ID, OD, DIM1			AA10740		KG	109.400	
				00002	GPT.612001.2009	005	GROUNDING PAD TK, WDT, LEN, ID, OD, DIM1	44987000029	001	AA10740		KG		

266.5

DISTRIBUTION DETAILS						REV NO. 1	PREP BY	CKD BY	APPD BY	DATE 01 NOV 2014
FTM			TRE	TRM		PREP BY	CKD BY	APPD BY	DATE	
8			1	3		RT	LK	AKP	24 APR 2014	DRG NO 24987000022 SHT 1 OF 1

FIRST ANGLE PROJECTION

(ALL DIMENSIONS ARE IN mm)

DRG. NO. 2 498 70 00022

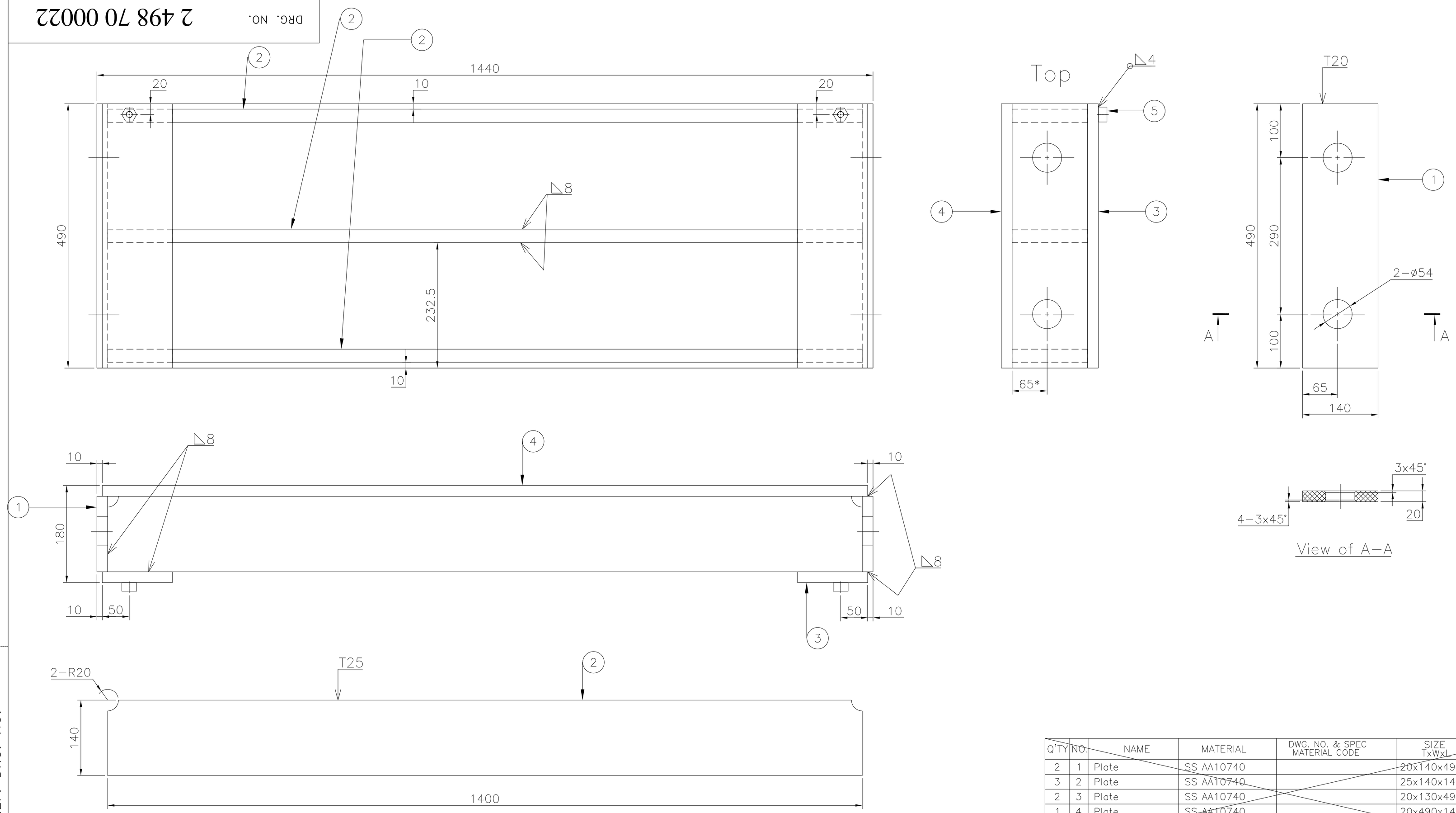

Q'TY	NO.	NAME	MATERIAL	DWG. NO. & SPEC MATERIAL CODE	SIZE TxWxL	REMARK
2	1	Plate	SS AA10740		20x140x490	10,8kg
3	2	Plate	SS AA10740		25x140x1400	38,5kg
2	3	Plate	SS AA10740		20x130x490	10kg
1	4	Plate	SS AA10740		20x490x1420	109,4kg
2	5	Grounding pad	SS AA10740	GPT.612001.2009		

NOTES:-

1. FOR DELINKED BOM REFER COMPUTER BOM NO. 24987000022.
2. *REFERENCE DIMENSIONS.
3. SURFACE COATING SHELL BE UNDER CUSTOMER TECHNOLOGICAL INSTRUCTION - OIL PROOF.
4. THE FACE SIDE OF THE GROUNDING PAD DO NOT PAINT.
5. WELDING OF LOW-MAGNETIC STEEL SHALL BE MADE BY STAINLESS ELECTRODE.
6. ALL WELD SEAMS, WHICH ARE NOT SPECIFIED, SHALL BE WELDED BY Δ8.
7. THE REST OF UNSPECIFIED TECHNICAL REQUIREMENTS SHALL BE IN ACCORDANCE WITH NORMATIVE DOCUMENTS OF CUSTOMER.

GPT ASSY. DRG. NO.	GPT 612001.2000	ITEM NO.	30	GPT DRG. NO.	GPT 612001.2040

ADDITIONAL INFORMATION
WO. NO.- 62007-A-512-01

STATUS OF DRAWING U

DISTRIBUTION OF PRINTS
TRE-1, TRM-3
FTM-8

उत्पाद का प्रकार या ग्राहक /परियोजना का नाम
TYPE OF PRODUCT OR NAME OF CUSTOMER/PROJECT

500 MVA, 765/400/33 KV 1 PHASE, AUTO TRANSFORMER
MEGHA ENGG. & INFRA LTD.
TRFR & REACTOR PKG FOR WUPPTCL

बी एच ई एल
भारत हेवी इलेक्ट्रिकल्स लिमिटेड
भोपाल
BHARAT HEAVY ELECTRICALS LTD.
BHOPAL

	नाम/ NAME	हस्ता/ SIGN	दिनांक/DATE	ले.रि. की संख्या NO. OF VAR
बनाया DRN	SKC		30.04.14	
जाँचा CKD	LALIT		05.05.14	
स्वीकृत APPD	AKP		08.05.14	–

REV.	DATE			
01	31/10/14	ALTERED	SKC	
		CHECKED	LALIT	
		APPROVED	AKP	

SIZE OF IT . 02 & 04 CHANGED IN BOM AS PER DRG.

विभाग DEPT	TRE	उन. टल. नाप की श्रेणी UNTOL. DIMS. GR.	उलुपात SCALE	भार कि.ग्रा. WEIGHT (K.G.)	उसे. ड्राईंग का संदर्भ REF. TO ASSY. DRG.
कोड CODE	406	–		265.5	0 498 70 00002

मद क. ITEM NO. 30 | मद संख्या NO. OF ITEM –

शीर्षक/ TITLE
TOP SIDE BEAM

ड्राईंग क./DRAWING NO. 2 498 70 00022 | पुन./REV 01

पृष्ठ क./SHT. No. 01 पृष्ठों की संख्या/NO. OF SHT. 01

THE INFORMATION ON THIS DOCUMENT IS THE PROPERTY OF BHARAT HEAVY ELECTRICALS LIMITED
IT MUST NOT BE USED DIRECTLY OR INDIRECTLY IN ANY WAY DETRIMENTAL TO THE INTEREST OF THE COMPANY

INVENTORY NO. | SIGN. & DATE | REF. DRG. NO.

FIRST ANGLE PROJECTION

(ALL DIMENSIONS ARE IN mm)

DRG. NO. 2 498 70 00023

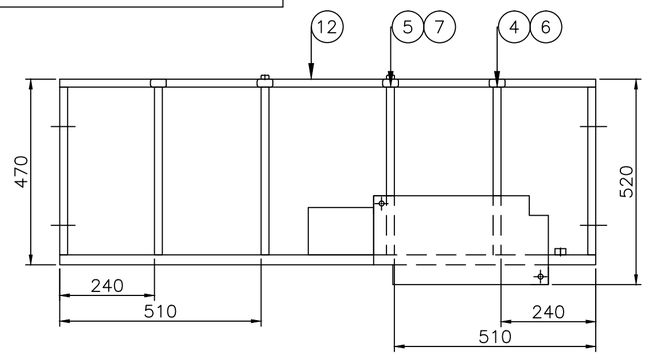

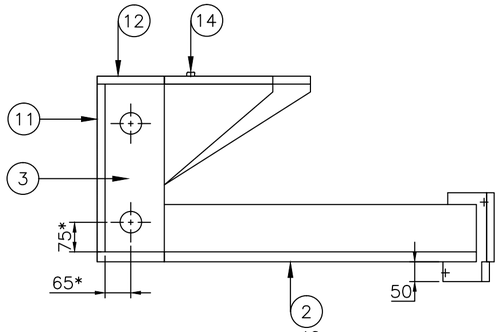

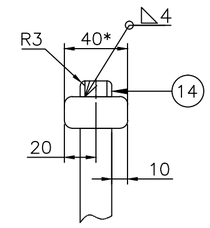

View of A–A(4:1)

Q'TY	NO.	NAME	MATERIAL	DWG. NO. & SPEC MATERIAL CODE	SIZE TxWxL	REMARK
1	1	Plate	SS AA10740		20x225x456	15,14kg
1	2	Plate	SS AA10740		25x986x1358	180,3kg
2	3	Rib	SS AA10740		20x150x425	9,23kg
2	4	Rib	SS AA10740		20x425x425	15,9kg
2	5	Rib	SS AA10740		20x425x520	18kg
2	6	Plate	SS AA10740		20x40x275	1,73kg
2	7	Plate	SS AA10740		20x40x370	2,33kg
1	8	Grounding pad	SS AA10740	GRT.612001.2009		
1	9	Rib	SS AA10740		20x120x900	17,1kg
1	10	Rib	SS AA10740		20x120x971	18,4kg
1	11	Plate	SS AA10740		20x425x1358	90,8kg
1	12	Plate	SS AA10740		20x170x1358	36,3kg
2	14	Pin	MS AA10112			0,01kg

NOTES:-

1. FOR DELINKED BOM REFER COMPUTER BOM NO. 24987000023.
2. *REFERENCE DIMENSIONS.
3. SURFACE COATING SHELL BE UNDER CUSTOMER TECHNOLOGICAL INSTRUCTION - OIL PROOF.
4. THE FACE SIDE OF THE GROUNDING PAD DO NOT PAINT.
5. WELDING OF LOW-MAGNETIC STEEL SHALL BE MADE BY STAINLESS ELECTRODE.
6. ALL WELD SEAMS, WHICH ARE NOT SPECIFIED, SHALL BE WELDED BY ∆8.
7. THE REST OF UNSPECIFIED TECHNICAL REQUIREMENTS SHALL BE IN ACCORDANCE WITH NORMATIVE DOCUMENTS OF CUSTOMER.

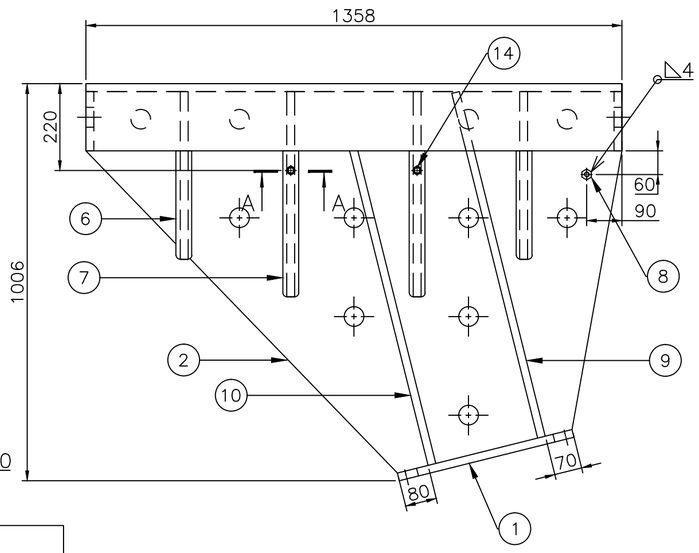

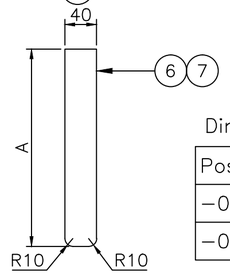

Dimensions, mm

Pos.	A	Mass,kg
–06	275	1,73
–07	370	2,33

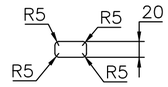

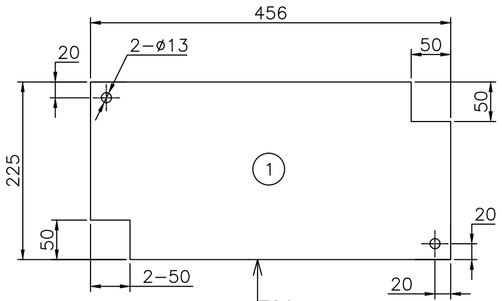

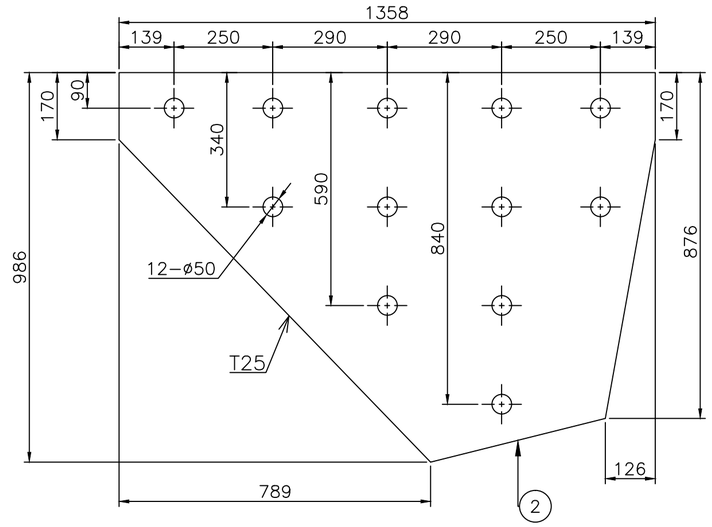

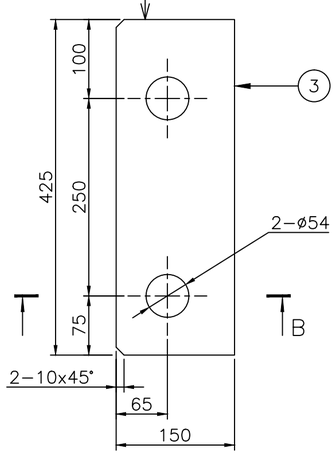

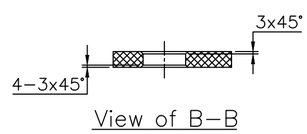

View of B–B

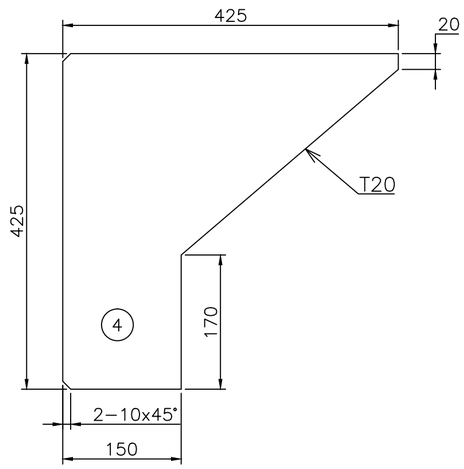

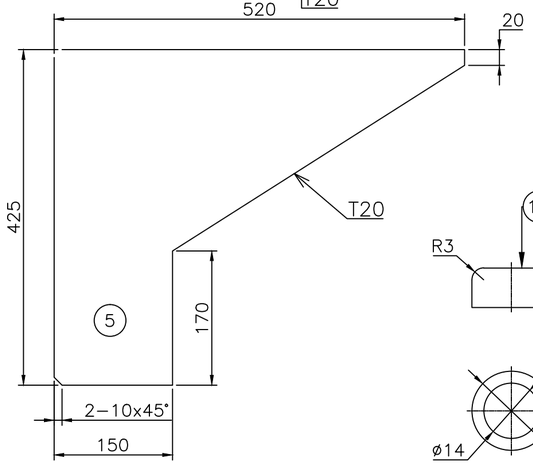

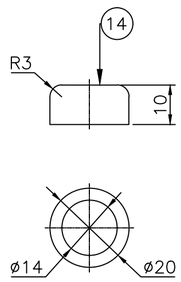

GPT ASSY. DRG. NO.	GPT 612001.2000	ITEM NO.	31	GPT DRG. NO.	GPT 612001.2041

ADDITIONAL INFORMATION
WO. NO.- 62007-A-512-01

STATUS OF DRAWING U

DISTRIBUTION OF PRINTS
TRE-1, TRM-3
FTM-8

उत्पाद का प्रकार या ग्राहक /परियोजना का नाम
TYPE OF PRODUCT OR NAME OF CUSTOMER/PROJECT
500 MVA, 765/400/33 KV 1 PHASE, AUTO TRANSFORMER
MEGHA ENGG. & INFRA LTD.
TRFR & REACTOR PKG FOR WUPPTCL

भारत हेवी इलेक्ट्रिकल्स लिमिटेड भोपाल
BHARAT HEAVY ELECTRICALS LTD. BHOPAL

	नाम/ NAME	हस्ता/ SIGN	दिनांक/DATE	ये ड्रा. की संख्या NO. OF VAR
बनाया DRN	SKC		30.04.14	
जाँचा CKD	LALIT		05.05.14	
स्वीकृत APPD	AKP		08.05.14	-

REV.	DATE	ALTERED / CHECKED / APPROVED

विभाग DEPT. TRE; कोड CODE 406; उम. टॉल. जब तक और कोई UNTOL. DIMS. GR. –; SCALE; वजन WEIGHT (KG.) 452.5; उपयोग मद REF. TO ASSY. DRG. 0 498 70 00002; मद सं. ITEM NO. 31; मद संख्या NO. OF ITEM –

शीर्षक/ TITLE
BOTTOM SIDE BEAM

ड्रॉइंग सं./DRAWING NO. 2 498 70 00023; पुनर्निर्माण/REV 00

पृष्ठ सं./SHT. No. 01 पृष्ठों की संख्या/NO. OF SHT. 01

THE INFORMATION ON THIS DOCUMENT IS THE PROPERTY OF BHARAT HEAVY ELECTRICALS LIMITED
IT MUST NOT BE USED DIRECTLY OR INDIRECTLY IN ANY WAY DETRIMENTAL TO THE INTEREST OF THE COMPANY

REF. DRG. NO.
SIGN. & DATE
INVENTORY NO.

BILL OF MATERIAL	DEP NO	NO OF IT	NO OF VAR	TYPE OF PRODUCT	WORKORDER	DRG NO	CORE CODE	REV
		14	1	500MVA,765KV,1PH. MEGA	62007A51201	24987000023	65370809	00
					TITLE: BOTTOM SIDE BEAM END TIE PLATE			SHT NO 1 OF 2

DU	VAR03	VAR02	VAR01	VAR00	REMARKS	IT NO	DESCRIPTION / MAT SIZE	TK	WDT	LEN	ID	OD	DIM1	DRAWING NO / DETAILS	IT. / VAR	MATCODE / MAT SPEC	A/C	UT	UNIT WT / QTY	G/S / ZONE
				00001	TO DETAIL	001	PLATE	20	225	456						AA10740		KG	15.140	
				00001	TO DETAIL	002	PLATE	25	986	1358						AA10740		KG	180.300	
				00002	TO DETAIL	003	RIB	20	150	425						AA10740		KG	9.230	
				00002	TO DETAIL	004	RIB	20	425	425						AA10740		KG	15.900	
				00002	TO DETAIL	005	RIB	20	425	520						AA10740		KG	18.000	
				00002	TO DETAIL	006	PLATE	20	40	275						AA10740		KG	1.730	
				00002	TO DETAIL	007	PLATE	20	40	370						AA10740		KG	2.330	
				00001	GPT.612001.2009	008	GROUNDING PAD							44987000029	001	AA10740		KG		
				00001	TO DETAIL	009	RIB	20	120	900						AA10740		KG	17.100	
				00001	TO DETAIL	010	RIB	20	120	971						AA10740		KG	18.400	
				00001	TO DETAIL	011	PLATE	20	425	1358						AA10740		KG	90.800	
				00001	TO DETAIL	012	PLATE	20	170	1358						AA10740		KG	36.300	

DISTRIBUTION DETAILS					
FTM			TRE	TRM	
8			1	3	

REV NO. 0	PREP BY	CKD BY	APPD BY	DATE
PREP BY	CKD BY	APPD BY	DATE	
KVA	LK	AKP	24 APR 2014	

DRG NO 24987000023

SHT 1 OF 2

BILL OF MATERIAL	DEP NO	NO OF IT	NO OF VAR	TYPE OF PRODUCT	WORKORDER	DRG NO	CORE CODE	REV
		14	1	500MVA,765KV,1PH. MEGA	62007A51201	24987000023	65370809	00
					TITLE: BOTTOM SIDE BEAM END TIE PLATE			SHT NO 2 OF 2

DU	VAR03	VAR02	VAR01	VAR00	REMARKS	IT NO	DESCRIPTION / MAT SIZE	DRAWING NO / DETAILS	IT.	MATCODE / MAT SPEC	A/C	UT	UNIT WT / QTY	G/S / ZONE
				00002		014	PIN TK WDT LEN ID OD DIM1			AA10112		KG	0.010	

452.44

DISTRIBUTION DETAILS					
FTM			TRE	TRM	
8			1	3	

REV NO. 0	PREP BY	CKD BY	APPD BY	DATE
PREP BY	CKD BY	APPD BY	DATE	
KVA	LK	AKP	24 APR 2014	

DRG NO 24987000023

SHT 2 OF 2

BILL OF MATERIAL	DEP NO	NO OF IT	NO OF VAR	TYPE OF PRODUCT	WORKORDER	DRG NO	CORE CODE	REV
					62007A51201	34987000077	65170706	01
		5	1	500MVA, 765 KV 1PH. MEGA	TITLE MAIN, TOP CROSS BEAM MAIN, TOP CROSS			SHT NO 1 OF 1

DU	VAR03	VAR02	VAR01	VAR00	REMARKS	IT NO	DESCRIPTION / MAT SIZE	DRAWING NO / DETAILS	IT. / VAR	MATCODE / MAT SPEC	A/C	UT	UNIT WT / QTY	G/S / ZONE
		00002	00002	00002	TO DETAIL	001	CLAMP TK 10, WDT 80, LEN 290, ID, OD, DIM1			AA1011808072 AA10122		KG	1.610	
		00002	00002	00002	TO DETAIL	002	PLATE TK 10, WDT 65, LEN 65, ID, OD, DIM1			AA1011808072 AA10108		KG	0.230	
				00001	SEE TABLE FOR DIM.	003	PLATE TK 12, WDT 100, LEN, ID, OD, DIM1			AA10122		KG	16.500	
			00001		SEE TABLE FOR DIM.	004	PLATE TK 12, WDT 100, LEN, ID, OD, DIM1			AA10122			15.900	
		00001			SEE TABLE FOR DIM.	005	PLATE TK 12, WDT 100, LEN, ID, OD, DIM1			AA10122		KG	16.700	

20.38 19.58 20.18

DISTRIBUTION DETAILS					REV NO. 1	PREP BY	CKD BY	APPD BY	DATE 01 NOV 2014
TRE	TRM				PREP BY	CKD BY	APPD BY	DATE	
1	3				KVA	LK	AKP	24 APR 2014	DRG NO 34987000077 SHT 1 OF 1

FIRST ANGLE PROJECTION

(ALL DIMENSIONS ARE IN mm)

DRG. NO. 3 498 70 00077

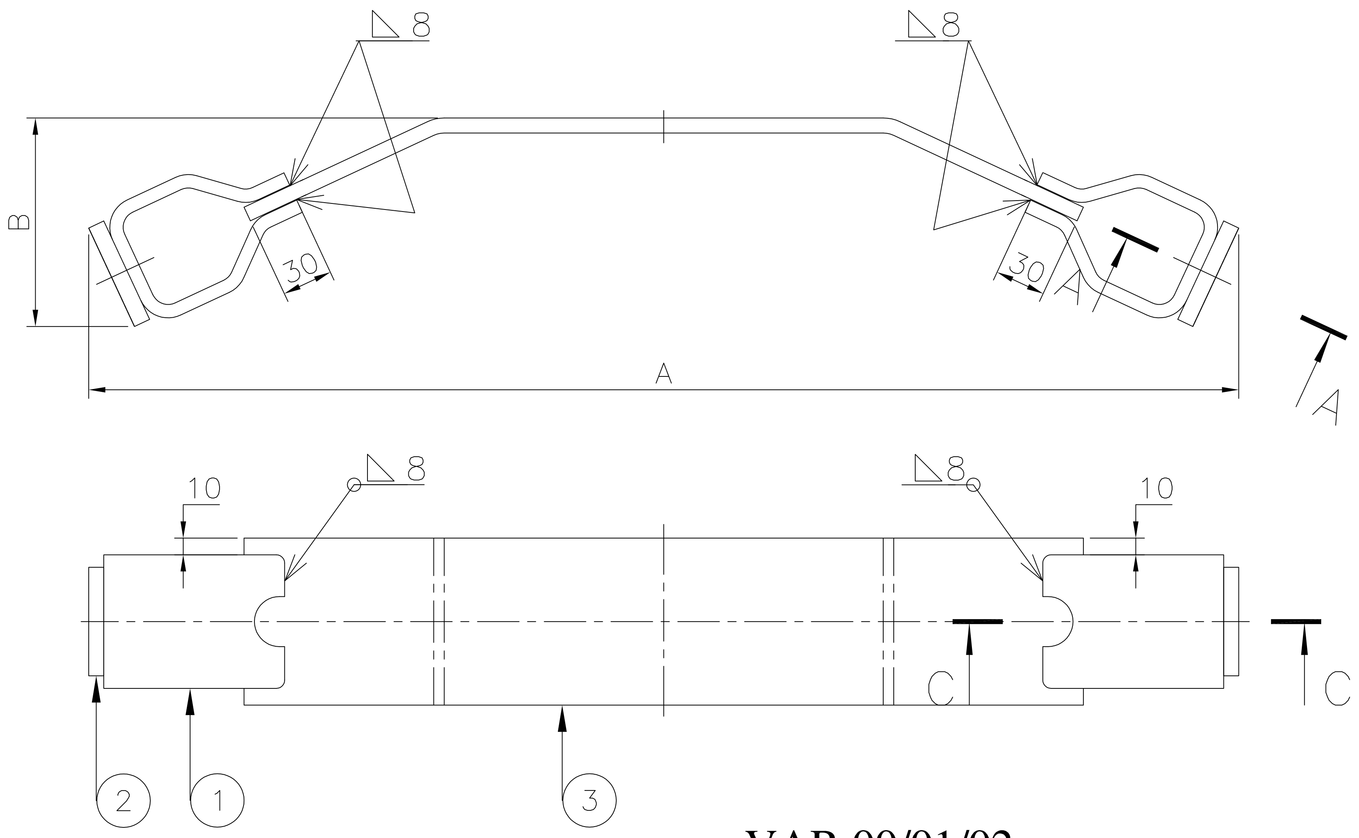

VAR 00/01/02

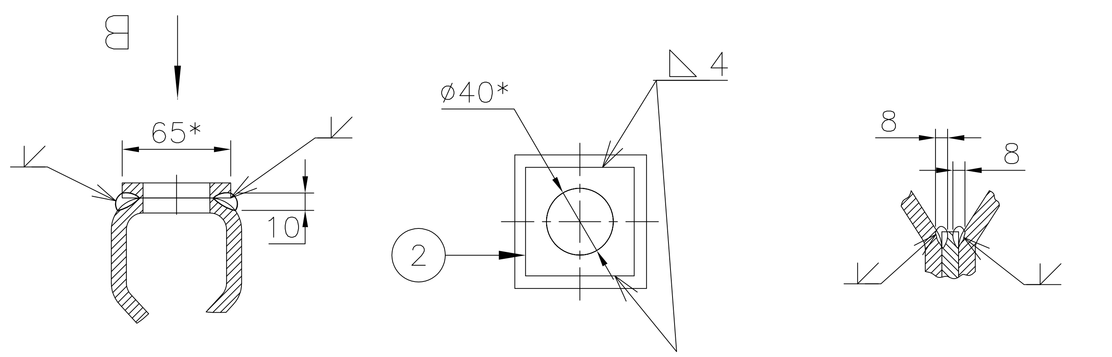

View of A–A View of B View of C–C

01

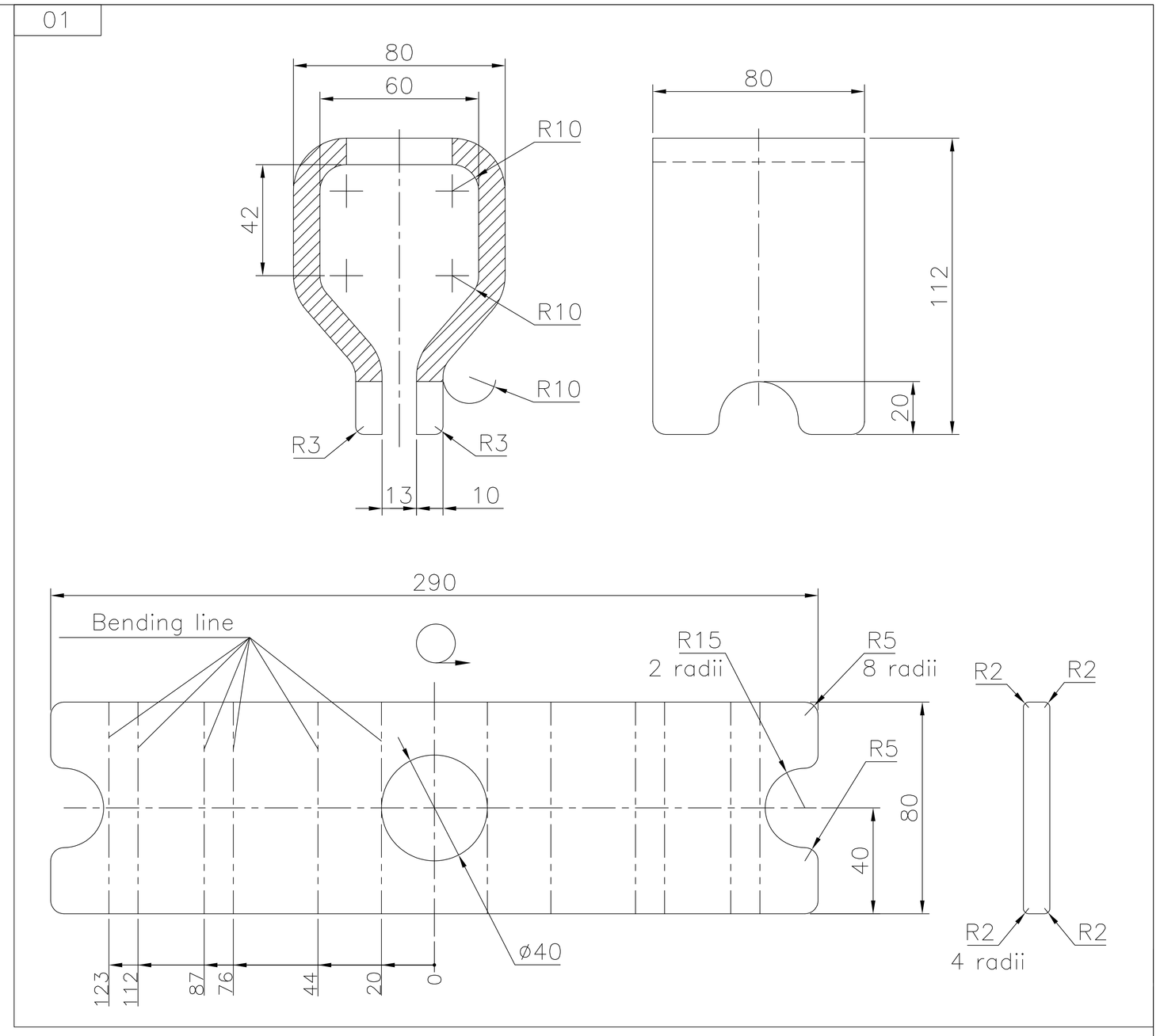

Var.	Pos.	A	B	C	D	E	F	T	Mass,kg	Location
00	–01	1530	172	321	19	716	117	12	16,5	top of top yoke
01	–02	1471	153	184	25	929	91	12	15,9	bottom of bottom yoke
02	–03	1538	193	308	23	762	134	12	16,7	bottom of top yoke

NOTES:-

1. FOR DELINKED BOM REFER COMPUTER BOM NO. 34987000077.
2. * REFERENCE DIMENSIONS.
3. SURFACE COATING SHALL BE OIL-PROOF AND APPLIED ACCORDING TO CUSTOMER TECHNOLOGY.
4. THE REST OF UNSPESIFIED TECHNICAL REQUIREMENTS SHALL BE IN ACCORDANCE WITH NORMATIVE DOCUMENTS OF CUSTOMER.

03/04/05

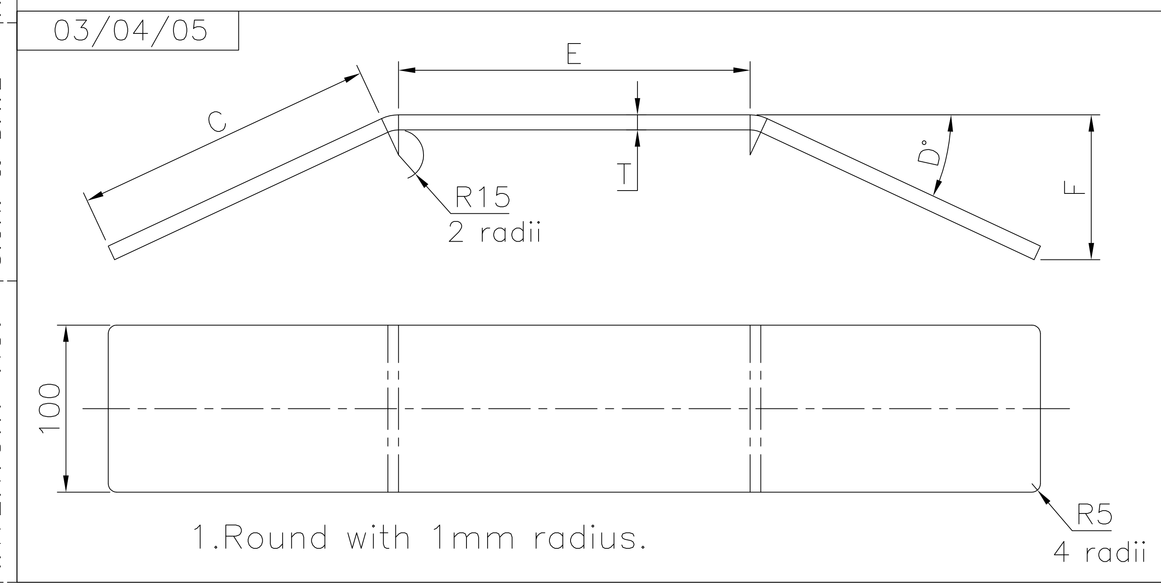

1.Round with 1mm radius.

02

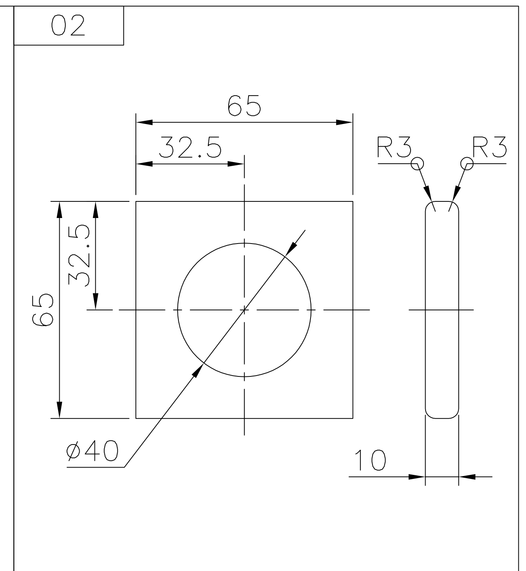

1	3	Plate	HTS AA10122			
2	2	Plate	MS AA10108		10 x 65 x 65	0,23kg
2	1	Clamp	HTS AA10122		10 x 80 x 290	1,61kg
Q'TY	NO.	NAME	MATERIAL	DWG. NO. & SPEC MATERIAL CODE	TxWxL	REMARK

GPT ASSY. DRG. NO. GPT 612001.2000 ITEM NO. GPT DRG. NO. GPT 612001.2001

ADDITIONAL INFORMATION
WO. NO.- 62007-A-512-01

STATUS OF DRAWING U

DISTRIBUTION OF PRINTS
TRE-1, TRM-3
FTM-8

उत्पाद का प्रकार या ग्राहक /परियोजना का नाम
TYPE OF PRODUCT OR NAME OF CUSTOMER/PROJECT

500 MVA, 765/400/33 KV 1 PHASE, AUTO TRANSFORMER
MEGHA ENGG. & INFRA LTD.
TRFR & REACTOR PKG FOR WUPPTCL

बी एच ई एल
भारत हेवी इलेक्ट्रिकल्स लिमिटेड
भोपाल
BHARAT HEAVY ELECTRICALS LTD.
BHOPAL

	नाम/ NAME	हस्ता/ SIGN	दिनांक/DATE	रेरि. की संख्या NO. OF VAR
बनाया DRN	SKC		30.04.14	
जाँचा CKD	LALIT		05.05.14	
स्वीकृत APPD	AKP		08.05.14	–

REV.	DATE	ALTERED	SKC
01	01/11/14	CHECKED	LALIT
		APPROVED	AKP

DIM. OF IT. 003, 004, 005 CHANGED AS PER DRG.

विभाग DEPT TRE
कोड CODE 406
अन. टल. नाप की श्रेणी UNTOL. DIMS. GR. –
अनुपात SCALE
भार WEIGHT (K.G.)
उसे. ड्राईंग का संदर्भ REF. TO ASSY. DRG. 0 498 70 00002
मद क. ITEM NO.
मद संख्या NO. OF ITEM –

शीर्षक/ TITLE
BAND

ड्राईंग क./DRAWING NO. 3 498 70 00077
पुन./REV 01
पृष्ठ क./SHT. No. 01 पृष्ठों की संख्या/NO. OF SHT. 01

A3

THE INFORMATION ON THIS DOCUMENT IS THE PROPERTY OF BHARAT HEAVY ELECTRICALS LIMITED
IT MUST NOT BE USED DIRECTLY OR INDIRECTLY IN ANY WAY DETRIMENTAL TO THE INTEREST OF THE COMPANY

REF. DRG. NO.
SIGN. & DATE
INVENTORY NO.

FIRST ANGLE PROJECTION

(ALL DIMENSIONS ARE IN mm)

DRG. NO. 3 498 70 00078

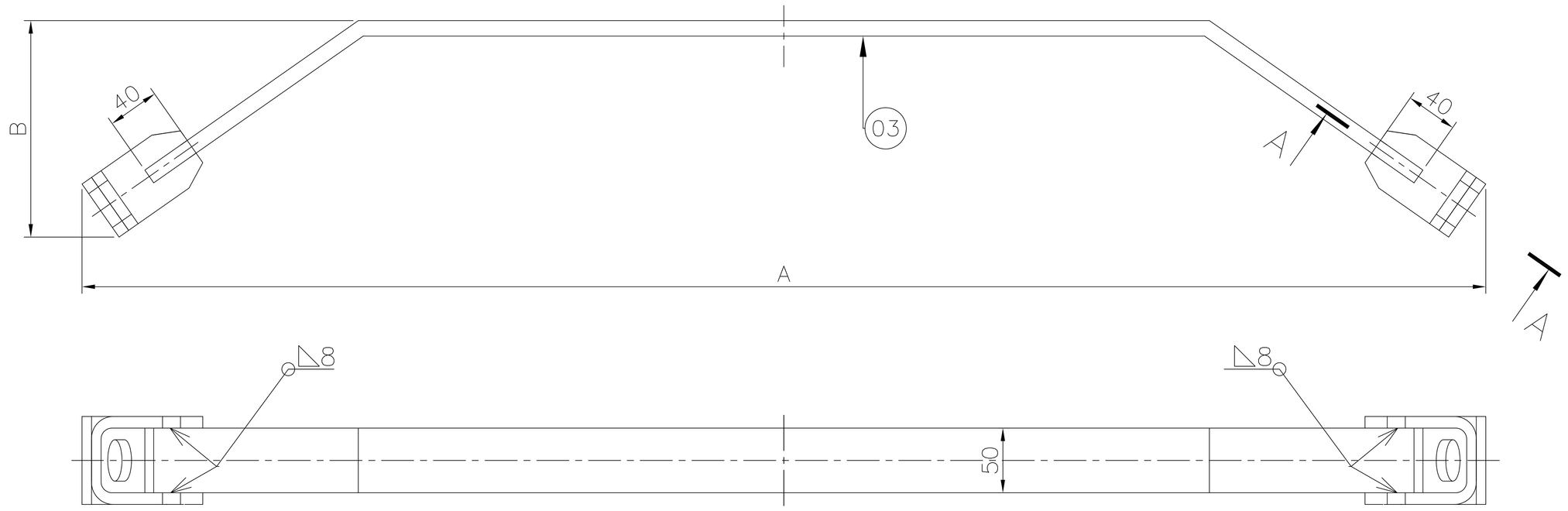

VAR 01/02

01

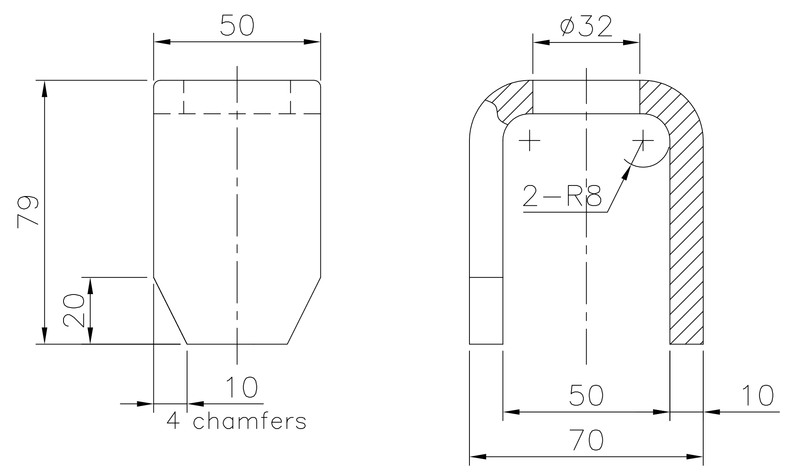

All sharps round with radius 3mm

02

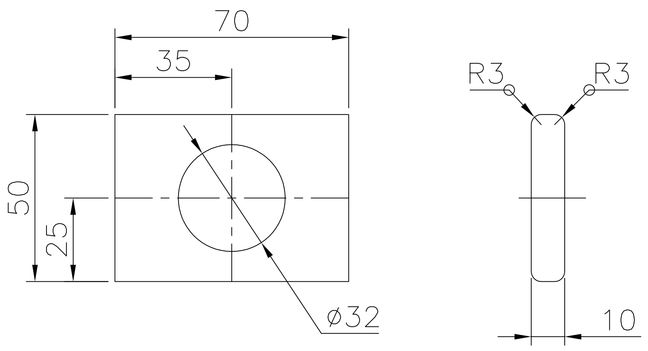

NOTES:-

1. FOR DELINKED BOM REFER COMPUTER BOM NO. 34987000078.
2. * REFERENCE DIMENSIONS.
3. SURFACE COATING SHALL BE OIL-PROOF AND APPLIED ACCORDING TO CUSTOMER TECHNOLOGY.
4. THE REST OF UNSPESIFIED TECHNICAL REQUIREMENTS SHALL BE IN ACCORDANCE WITH NORMATIVE DOCUMENTS OF CUSTOMER.

Var.	Pos.	A	B	C	D	E	F	T	Mass,kg	Location
00	–01	1520	184	346	23	762	149	12	8,78	bottom of top yoke
01	–02	1577	234	375	29	800	195	12	9,23	top of bottom yoke

03

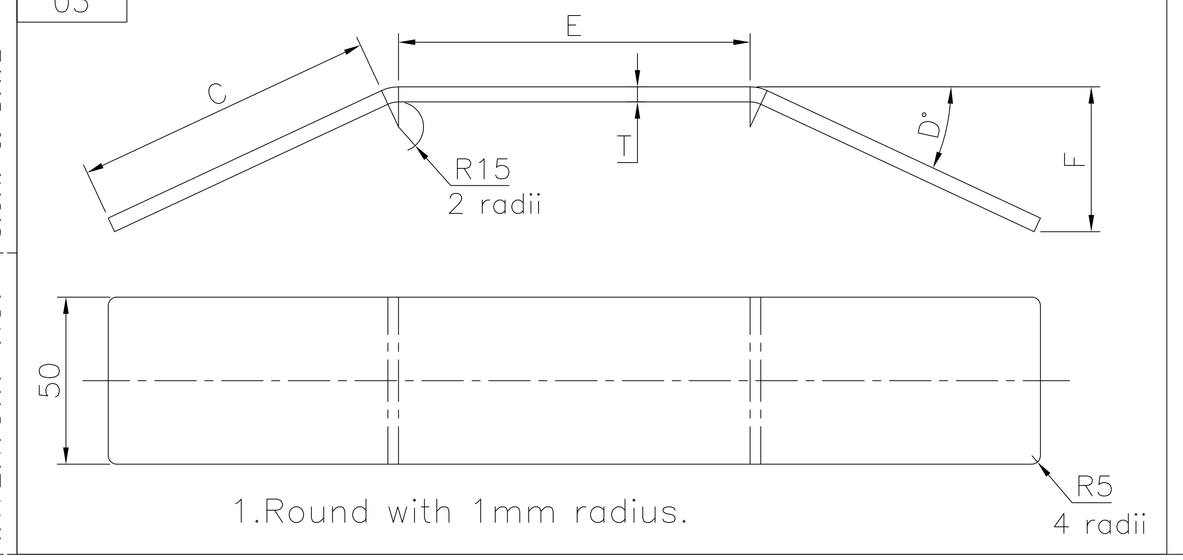

1.Round with 1mm radius.

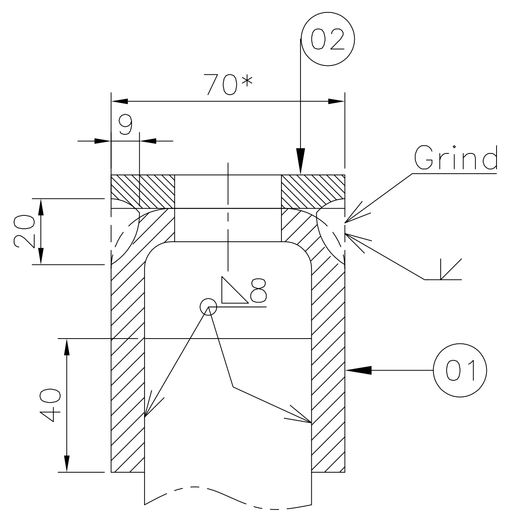

View of A–A

Q'TY	NO.	NAME	MATERIAL	DWG. NO. & SPEC MATERIAL CODE	SIZE TxWxL	REMARK
1	3	Plate	Stainless steel (320–340 mPa) D40S			
2	2	Plate	Stainless steel (320–340 mPa) D40S		10 x 50 x 70	0,22kg
2	1	Clamp	Stainless steel (320–340 mPa) D40S		10 x 50 x 197	0,74kg

GPT ASSY. DRG. NO. GPT 612001.2000 | ITEM NO. | GPT DRG. NO. GPT 612001.2002

ADDITIONAL INFORMATION
WO. NO.- 62007-A-512-01

STATUS OF DRAWING U

DISTRIBUTION OF PRINTS
TRE-1, TRM-3
FTM-8

उत्पाद का प्रकार या ग्राहक /परियोजना का नाम
TYPE OF PRODUCT OR NAME OF CUSTOMER/PROJECT

500 MVA, 765/400/33 KV 1 PHASE, AUTO TRANSFORMER
MEGHA ENGG. & INFRA LTD.
TRFR & REACTOR PKG FOR WUPPTCL

बी एच ई एल
भारत हेवी इलेक्ट्रिकल्स लिमिटेड
भोपाल
BHARAT HEAVY ELECTRICALS LTD.
BHOPAL

	नाम/ NAME	हस्ता./ SIGN	दिनांक/DATE	ले.रि. की संख्या NO. OF VAR
बनाया DRN	SKC		30.04.14	
जाँचा CKD	LALIT		05.05.14	
स्वीकृत APPD	AKP		08.05.14	–

REV.	DATE	
		ALTERED
		CHECKED
		APPROVED

विभाग DEPT TRE | कोड CODE 406 | अन. टाल. नाप की श्रेणी UNTOL. DIMS. GR. – | अनुपात SCALE | भार कि.ग्रा. WEIGHT (K.G.) | उसे. ड्राईंग का संदर्भ REF. TO ASSY. DRG. 0 498 70 00002 | मद क. ITEM NO. | मद संख्या NO. OF ITEM –

शीर्षक/ TITLE
BAND

ड्राईंग क./DRAWING NO. 3 498 70 00078 | पुन./REV 00

पृष्ठ क./SHT. No. 01 पृष्ठों की संख्या/NO. OF SHT. 01

A3

THE INFORMATION ON THIS DOCUMENT IS THE PROPERTY OF BHARAT HEAVY ELECTRICALS LIMITED
IT MUST NOT BE USED DIRECTLY OR INDIRECTLY IN ANY WAY DETRIMENTAL TO THE INTEREST OF THE COMPANY

REF. DRG. NO.
SIGN. & DATE
INVENTORY NO.

BILL OF MATERIAL	DEP NO	NO OF IT	NO OF VAR	TYPE OF PRODUCT	WORKORDER	DRG NO	CORE CODE	REV
					62007A51201	34987000078	65170706	00
	406	4		500MVA, 765KV, 1PH MEGA	TITLE MAIN TOP CROSS BEAM MAIN, TOP CROSS			SHT NO 1 OF 1

DU	VAR03	VAR02	VAR01	VAR00	REMARKS	IT NO	DESCRIPTION / MAT SIZE	DRAWING NO / DETAILS	IT. / VAR	MATCODE / MAT SPEC	A/C	UT	UNIT WT / QTY	G/S / ZONE
			00002	00002	(320-340 MPA) (D40S) TO DETAIL	001	CLAMP TK 10, WDT 50, LEN 197, ID, OD, DIM1			STAINLESS ST 320-340 MPA		KG	0.740	
			00002	00002	(D40S) TO DETAIL	002	PLATE TK 10, WDT 50, LEN 70, ID, OD, DIM1			STAINLESS ST 320-340 MPA		KG	0.220	
				00001	(D40S) TO DETAIL SEE TABLE FOR DIM	003	PLATE TK, WDT, LEN, ID, OD, DIM1			STAINLESS ST 320-340 MPA		KG	8.780	
			00001		(D40S) TO DETAIL SEE TABLE FOR DIM	004	PLATE TK, WDT, LEN, ID, OD, DIM1			STAINLESS ST 320-340 MPA		KG	9.230	

11.15 10.7

DISTRIBUTION DETAILS				REV NO. 0	PREP BY	CKD BY	APPD BY	DATE
TRE	TRM	TRX		PREP BY	CKD BY	APPD BY	DATE	
1	2	1		KVA	LK	AKP	24 APR 2014	DRG NO 34987000078 SHT 1 OF 1

FIRST ANGLE PROJECTION

(ALL DIMENSIONS ARE IN mm)

DRG. NO. 3 498 70 00079

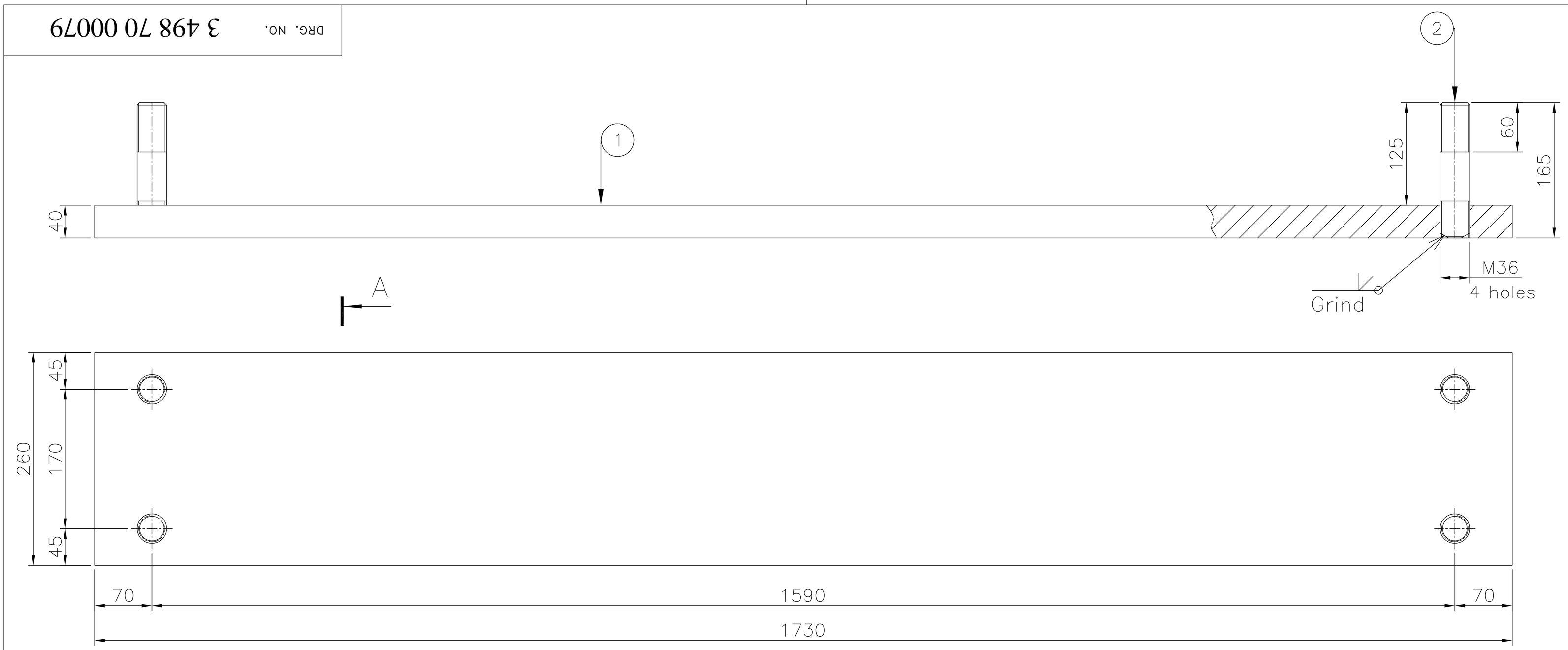

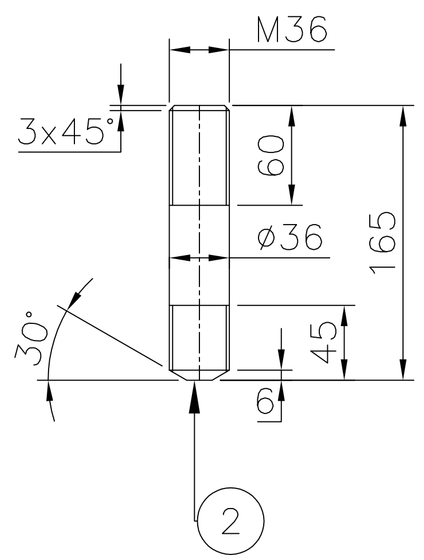

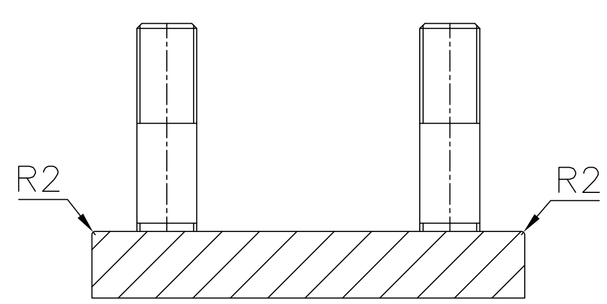

View of A–A

NOTES:-

1. FOR DELINKED BOM REFER COMPUTER BOM NO. 34987000079.
2. YIELD STRENGTH OF THE STUD BOLT IS EQUAL OR MORE THAN 460 KG/MM2.
3. SURFACE COATING SHALL BE OIL-PROOF AND APPLIED ACCORDING TO CUSTOMER TECHNOLOGY.
4. THE REST OF UNSPESIFIED TECHNICAL REQUIREMENTS SHALL BE IN ACCORDANCE WITH NORMATIVE DOCUMENTS OF CUSTOMER.

Q'TY	NO.	NAME	MATERIAL	DWG. NO. & SPEC MATERIAL CODE	SIZE TxWxL	REMARK
4	2	Stud bolt	HTS AA10501		M36x165	1,32 kg
1	1	Plate	HTS AA10122		40 x 260 x 1730	141 kg

GPT ASSY. DRG. NO. GPT 612001.2000 | ITEM NO. 11 | GPT DRG. NO. GPT 612001.2008

ADDITIONAL INFORMATION
WO. NO.- 62007-A-512-01

STATUS OF DRAWING U

DISTRIBUTION OF PRINTS
TRE-1, TRM-3
FTM-8

उत्पाद का प्रकार या ग्राहक /परियोजना का नाम
TYPE OF PRODUCT OR NAME OF CUSTOMER/PROJECT
500 MVA, 765/400/33 KV 1 PHASE, AUTO TRANSFORMER
MEGHA ENGG. & INFRA LTD.
TRFR & REACTOR PKG FOR WUPPTCL

बी एच ई एल
भारत हेवी इलेक्ट्रिकल्स लिमिटेड
भोपाल
BHARAT HEAVY ELECTRICALS LTD.
BHOPAL

	नाम/ NAME	हस्ता./ SIGN	दिनांक/DATE	वे.र. की संख्या NO. OF VAR
बनाया DRN	SKC		30.04.14	
जाँचा CKD	LALIT		05.05.14	
स्वीकृत APPD	AKP		08.05.14	-

REV.	DATE	ALTERED / CHECKED / APPROVED

विभाग DEPT TRE | कोड CODE 406 | उन. टल. नाप की सेपी UNTOL. DIMS. GR. – | उनुपात SCALE | भार कि.ग्रा. WEIGHT (K.G.) 146.3 | उसे. ड्राईंग का संदर्भ REF. TO ASSY. DRG. 0 498 70 00002 | मद क. ITEM NO. 11 | मद संख्या NO. OF ITEM –

शीर्षक/ TITLE
FOOT

ड्राईंग क./DRAWING NO. 3 498 70 00079 | पुन./REV 00

पृष्ठ क./SHT. No. 01 पृष्ठों की संख्या/NO. OF SHT. 01

A3

BHARAT HEAVY ELECTRICALS LIMITED
IT MUST NOT BE USED DIRECTLY OR INDIRECTLY IN ANY WAY DETRIMENTAL TO THE INTEREST OF THE COMPANY
THE INFORMATION ON THIS DOCUMENT IS THE PROPERTY OF

REF. DRG. NO.
SIGN. & DATE
INVENTORY NO.

BILL OF MATERIAL	DEP NO	NO OF IT	NO OF VAR	TYPE OF PRODUCT	WORKORDER	DRG NO	CORE CODE	REV
					62007A51201	34987000079	65170708	00
		5	1	500MVA,765KV,1PH. MEGA	TITLE: FOOT FOOT ASSY.			SHT NO 1 OF 1

DU	VAR03	VAR02	VAR01	VAR00	REMARKS	IT NO	DESCRIPTION / MAT SIZE	DRAWING NO / DETAILS	IT. VAR	MATCODE / MAT SPEC	A/C	UT	UNIT WT / QTY	G/S / ZONE
				00001	TO DETAIL	001	PLATE TK 40, WDT 260, LEN 1730, ID, OD, DIM1			AA10122		KG	141.000	
				00004	TO DETAIL M36X165	002	STUD BOLT M36X165 TK, WDT, LEN, ID, OD, DIM1			AA10501		KG	1.320	

146.28

DISTRIBUTION DETAILS					REV NO. 0	PREP BY	CKD BY	APPD BY	DATE
TRE	TRM	FTM			PREP BY	CKD BY	APPD BY	DATE	
1	3	8			RT	LK	AKP	24 APR 2014	DRG NO 34987000079 SHT 1 OF 1

FIRST ANGLE PROJECTION

(ALL DIMENSIONS ARE IN mm)

DRG. NO. 3 498 70 00109

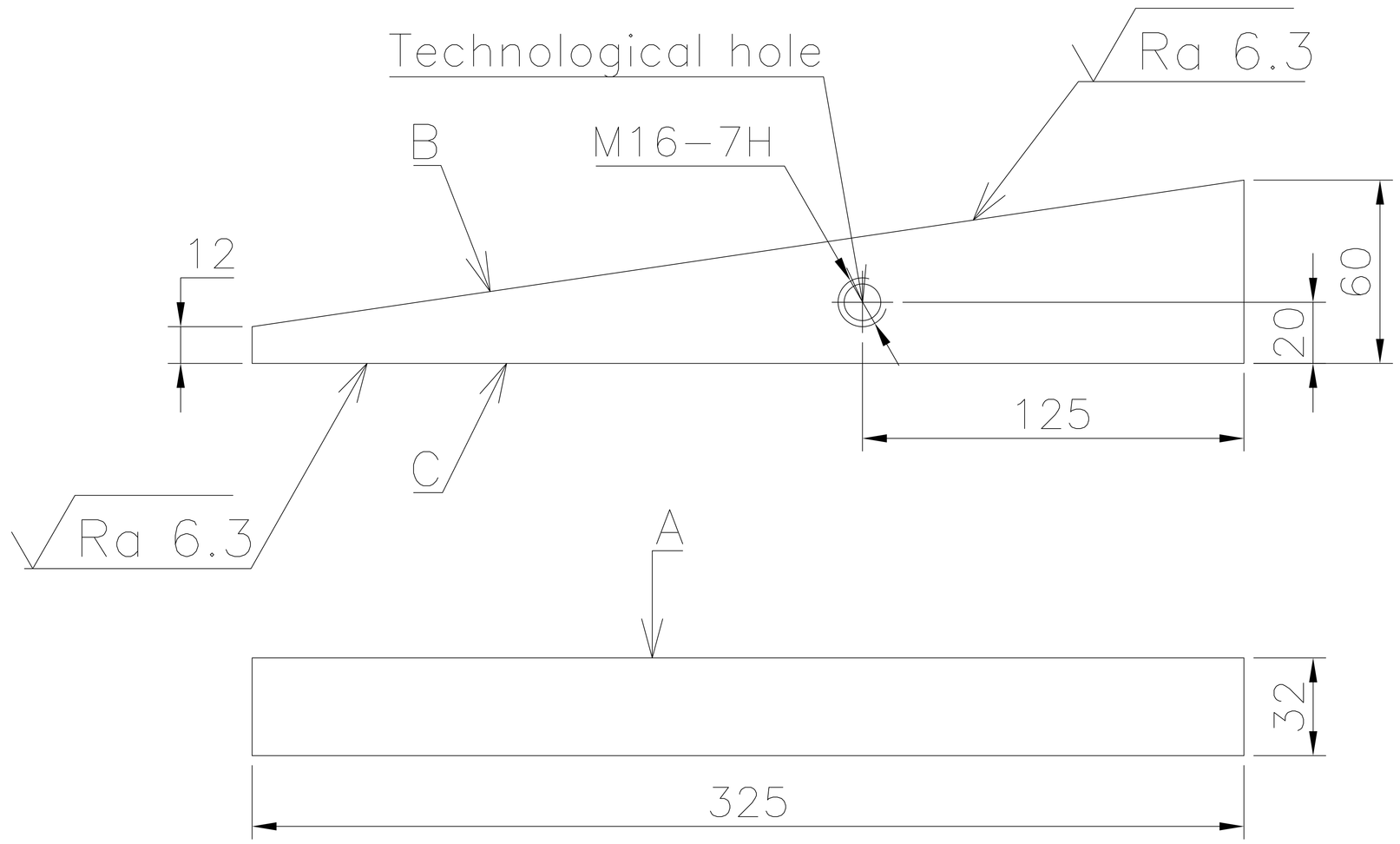

NOTES:-

1. FOR DELINKED BOM REFER COMPUTER BOM NO. 34987000109 .
2. NON-PERPENDICULARITY OF B AND C SURFACE AGAINST A SURFACE SHALL BE 0.3 MM MAX.
3. NONFLATNESS OF A, B AND C SURFACE SHALL BE 0.3 MM MAX.
4. SURFACE COATING - PHOSPHATING COATING AND APPLIED ACCORDING TO CUSTOMER TECHNOLOGY.
5. THE REST OF UNSPESIFIED TECHNICAL REQUIREMENTS SHALL BE IN ACCORDANCE WITH NORMATIVE DOCUMENTS OF CUSTOMER.

GPT ASSY. DRG. NO.	GPT 612001.2000	ITEM NO.	93	GPT DRG. NO.	PART-25
ADDITIONAL INFORMATION WO. NO.- 62007-A-512-01	उत्पाद का प्रकार या ग्राहक /परियोजना का नाम TYPE OF PRODUCT OR NAME OF CUSTOMER/PROJECT	500 MVA, 765/400/33 KV 1 PHASE, AUTO TRANSFORMER MEGHA ENGG. & INFRA LTD. TRFR & REACTOR PKG FOR WUPPTCL			
STATUS OF DRAWING U					
DISTRIBUTION OF PRINTS TRE-1, TRM-3	बी एच ई एल भारत हेवी इलेक्ट्रिकल्स लिमिटेड भोपाल BHARAT HEAVY ELECTRICALS LTD. BHOPAL	बनाया DRN	SKC	30.04.14	वे.रि. की संख्या NO. OF VAR
		चेक्ड CKD	LALIT	05.05.14	
		स्वीकृत APPD	AKP	08.05.14	–
REV. / DATE / ALTERED / CHECKED / APPROVED	विभाग DEPT TRE कोड CODE 406	अन. टल. नाप की श्रेणी UNTOL. DIMS. GR. –	अनुपात SCALE	भार कि.ग्रा. WEIGHT (K.G.) 2.90	उसे. ड्राईंग का संदर्भ REF. TO ASSY. DRG. 0 498 70 00002 / मद क्र. ITEM NO. 93 / मद संख्या NO. OF ITEM –
	शीर्षक/ TITLE WEDGE				ड्राईंग क्र./DRAWING NO. 3 498 70 00109 / पुन./REV 00
					पृष्ठ क्र./SHT. No. 01 पृष्ठों की संख्या/NO. OF SHT. 01

THE INFORMATION ON THIS DOCUMENT IS THE PROPERTY OF BHARAT HEAVY ELECTRICALS LIMITED
IT MUST NOT BE USED DIRECTLY OR INDIRECTLY IN ANY WAY DETRIMENTAL TO THE INTEREST OF THE COMPANY

INVENTORY NO. | SIGN. & DATE | REF. DRG. NO.

BILL OF MATERIAL	DEP NO	NO OF IT	NO OF VAR	TYPE OF PRODUCT	WORKORDER	DRG NO	CORE CODE	REV
		5	1	500MVA,765KV,1PH. MEGA	62007A51201	34987000109	63870815	00
					TITLE: PACKING SUPT. PACKING SUPT.			SHT NO 1 OF 1

DU	VAR03	VAR02	VAR01	VAR00	REMARKS	IT NO	DESCRIPTION / MAT SIZE						DRAWING NO / DETAILS	IT. / VAR	MATCODE / MAT SPEC	A/C	UT	UNIT WT / QTY	G / S / ZONE
				00001	TO DETAIL	001	WEDGE										KG	2.900	
							TK	WDT	LEN	ID	OD	DIM1			AA10122				
							32	60	325										

2.9

DISTRIBUTION DETAILS					REV NO. 0	PREP BY	CKD BY	APPD BY	DATE
TRE	TRM				PREP BY	CKD BY	APPD BY	DATE	
1	3				RT	LK	AKP	24 APR 2014	DRG NO 34987000109 SHT 1 OF 1

FIRST ANGLE PROJECTION

(ALL DIMENSIONS ARE IN mm)

DRG. NO. 3 498 70 00110

THE INFORMATION ON THIS DOCUMENT IS THE PROPERTY OF BHARAT HEAVY ELECTRICALS LIMITED
IT MUST NOT BE USED DIRECTLY OR INDIRECTLY IN ANY WAY DETRIMENTAL TO THE INTEREST OF THE COMPANY

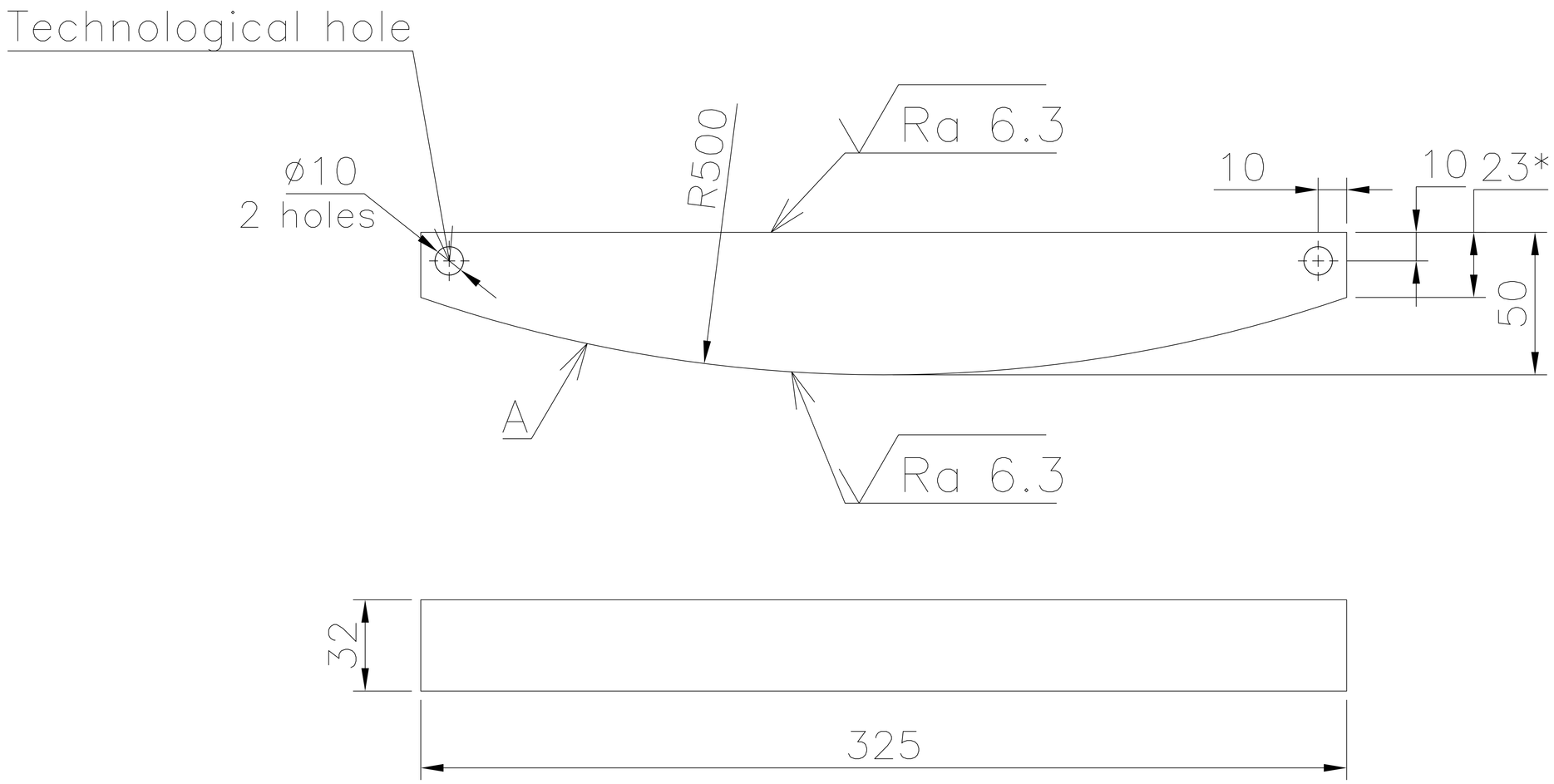

NOTES:-

1. FOR DELINKED BOM REFER COMPUTER BOM NO. 34987000110 .
2. NONFLATNESS OF A SURFACE SHALL BE 0.3 MM MAX.
3. SURFACE COATING - PHOSPHATING COATING AND APPLIED ACCORDING TO CUSTOMER TECHNOLOGY.
4. THE REST OF UNSPESIFIED TECHNICAL REQUIREMENTS SHALL BE IN ACCORDANCE WITH NORMATIVE DOCUMENTS OF CUSTOMER.

GPT ASSY. DRG. NO.	GPT 612001.2000	ITEM NO.	94	GPT DRG. NO.	PART-26

ADDITIONAL INFORMATION
WO. NO.- 62007-A-512-01

STATUS OF DRAWING U

DISTRIBUTION OF PRINTS
TRE-1, TRM-3

उत्पाद का प्रकार या ग्राहक /परियोजना का नाम
TYPE OF PRODUCT OR NAME OF CUSTOMER/PROJECT

500 MVA, 765/400/33 KV 1 PHASE, AUTO TRANSFORMER
MEGHA ENGG. & INFRA LTD.
TRFR & REACTOR PKG FOR WUPPTCL

बीएचईएल BHEL
भारत हेवी इलेक्ट्रिकल्स लिमिटेड भोपाल
BHARAT HEAVY ELECTRICALS LTD. BHOPAL

	नाम/ NAME	हस्ता/ SIGN	दिनांक/DATE	रे.रि. की संख्या NO. OF VAR
बनाया DRN	SKC		30.04.14	
जाँचा CKD	LALIT		05.05.14	
स्वीकृत APPD	AKP		08.05.14	-

REV.	DATE	ALTERED / CHECKED / APPROVED

विभाग DEPT TRE	उन. टल. नाप की श्रेणी UNTOL. DIMS. GR. –		उनुपात SCALE	भार कि.ग्रा. WEIGHT (K.G.) 3.35	उसे. ड्राईंग का संदर्भ REF. TO ASSY. DRG. 0 498 70 00002	मद क. ITEM NO. 94	मद संख्या NO. OF ITEM –
कोड CODE 406							

शीर्षक/ TITLE
SEGMENT

ड्राईंग क./DRAWING NO. 3 498 70 00110
पुन./REV 00
पृष्ठ क./SHT. No. 01 पृष्ठों की संख्या/NO. OF SHT. 01

INVENTORY NO. | SIGN. & DATE | REF. DRG. NO.

A3

BILL OF MATERIAL	DEP NO	NO OF IT	NO OF VAR	TYPE OF PRODUCT	WORKORDER	DRG NO	CORE CODE	REV
		5	1	500MVA,765KV,1PH. MEGA	62007A51201	34987000110	63870815	00
					TITLE PACKING SUPT. PACKING SUPT.			SHT NO 1 OF 1

DU	VAR03	VAR02	VAR01	VAR00	REMARKS	IT NO	DESCRIPTION / MAT SIZE						DRAWING NO / DETAILS	IT. / VAR	MATCODE / MAT SPEC	A/C	UT	UNIT WT / QTY	G / S / ZONE
				00001	TO DETAIL	001	SEGMENT										KG	3.350	
							TK	WDT	LEN	ID	OD	DIM1			AA10122				
							32	50	325										

3.35

DISTRIBUTION DETAILS					REV NO. 0	PREP BY	CKD BY	APPD BY	DATE
TRE	TRM				PREP BY	CKD BY	APPD BY	DATE	
1	3				RT	GK	AKP	24 APR 2014	DRG NO 34987000110 SHT 1 OF 1

FIRST ANGLE PROJECTION

(ALL DIMENSIONS ARE IN mm)

DRG. NO. 3 498 70 00111

THE INFORMATION ON THIS DOCUMENT IS THE PROPERTY OF BHARAT HEAVY ELECTRICALS LIMITED
IT MUST NOT BE USED DIRECTLY OR INDIRECTLY IN ANY WAY DETRIMENTAL TO THE INTEREST OF THE COMPANY

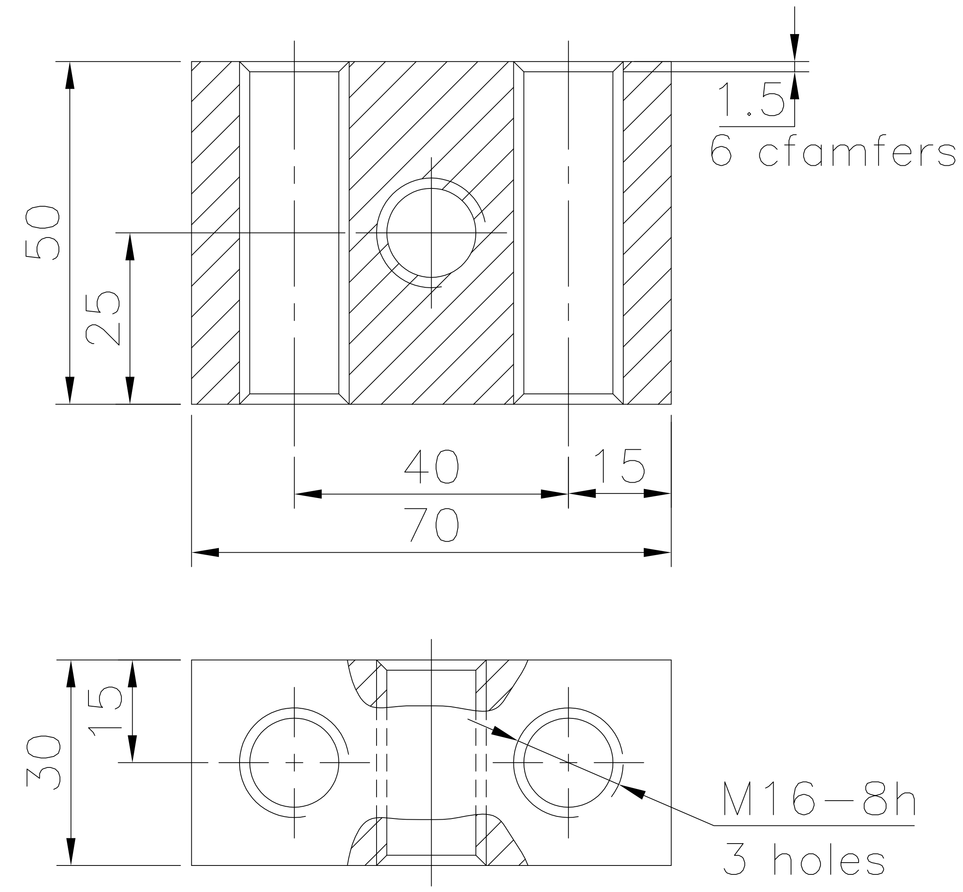

NOTES:-

1. FOR DELINKED BOM REFER COMPUTER BOM NO. 34987000111 .
2. SURFACE COATING SHALL BE OIL-PROOF AND APPLIED ACCORDING TO CUSTOMER TECHNOLOGY.
3. THE REST OF UNSPESIFIED TECHNICAL REQUIREMENTS SHALL BE IN ACCORDANCE WITH NORMATIVE DOCUMENTS OF CUSTOMER.

GPT ASSY. DRG. NO.	GPT 612001.2000	ITEM NO.	95	GPT DRG. NO.	PART-27

ADDITIONAL INFORMATION
WO. NO.- 62007-A-512-01

STATUS OF DRAWING U

DISTRIBUTION OF PRINTS
TRE-1, TRM-3

उत्पाद का प्रकार या ग्राहक /परियोजना का नाम
TYPE OF PRODUCT OR NAME OF CUSTOMER/PROJECT
500 MVA, 765/400/33 KV 1 PHASE, AUTO TRANSFORMER
MEGHA ENGG. & INFRA LTD.
TRFR & REACTOR PKG FOR WUPPTCL

बी एच ई एल
भारत हेवी इलेक्ट्रिकल्स लिमिटेड
भोपाल
BHARAT HEAVY ELECTRICALS LTD.
BHOPAL

	नाम/ NAME	हस्ता/ SIGN	दिनांक/DATE	ले.रि. की संख्या NO. OF VAR
बनाया DRN	SKC		30.04.14	
जाँचा CKD	LALIT		05.05.14	
स्वीकृत APPD	AKP		08.05.14	–

REV.	DATE	ALTERED / CHECKED / APPROVED

विभाग DEPT TRE	उन. टान. नाप की श्रेणी UNTOL. DIMS. GR. –		उनुपात SCALE	भार कि.ग्रा. WEIGHT (K.G.) 0.75	उसे. ड्राईंग का संदर्भ REF. TO ASSY. DRG. 0 498 70 00002	मद क. ITEM NO. 95	मद संख्या NO. OF ITEM –
कोड CODE 406							

शीर्षक/ TITLE
BAR

ड्राईंग क./DRAWING NO. 3 498 70 00111 — पुन./REV 00

पृष्ठ क./SHT. No. 01 पृष्ठों की संख्या/NO. OF SHT. 01

INVENTORY NO.	SIGN. & DATE	REF. DRG. NO.

A3

BILL OF MATERIAL	DEP NO	NO OF IT	NO OF VAR	TYPE OF PRODUCT	WORKORDER	DRG NO	CORE CODE	REV
					62007A51201	34987000111	63870813	00
		5	1	500MVA,765KV,1PH. MEGA	TITLE LOCKING ARRGT. LOCKING ARRGT.			SHT NO 1 OF 1

DU	VAR03	VAR02	VAR01	VAR00	REMARKS	IT NO	DESCRIPTION / MAT SIZE						DRAWING NO / DETAILS	IT. / VAR	MATCODE / MAT SPEC	A/C	UT	UNIT WT / QTY	G / S / ZONE
				00001	TO DETAIL	001	BAR										KG	0.750	
							TK	WDT	LEN	ID	OD	DIM1			AA10108				
							30	50	70										

.75

DISTRIBUTION DETAILS					REV NO. 0	PREP BY	CKD BY	APPD BY	DATE
TRE	TRM				PREP BY	CKD BY	APPD BY	DATE	
1	3				RT	LK	AKP	24 APR 2014	DRG NO 34987000111 SHT 1 OF 1

FIRST ANGLE PROJECTION

(ALL DIMENSIONS ARE IN mm)

DRG. NO. 3 498 70 00112

THE INFORMATION ON THIS DOCUMENT IS THE PROPERTY OF BHARAT HEAVY ELECTRICALS LIMITED
IT MUST NOT BE USED DIRECTLY OR INDIRECTLY IN ANY WAY DETRIMENTAL TO THE INTEREST OF THE COMPANY

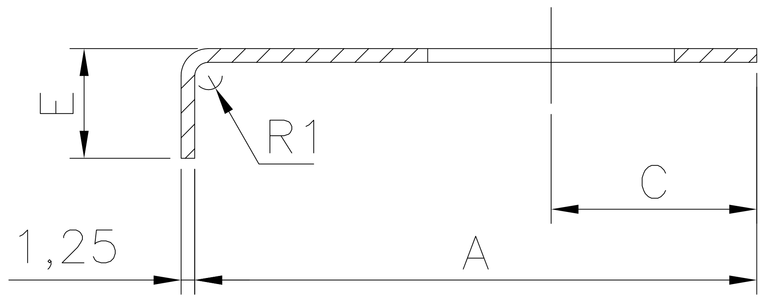

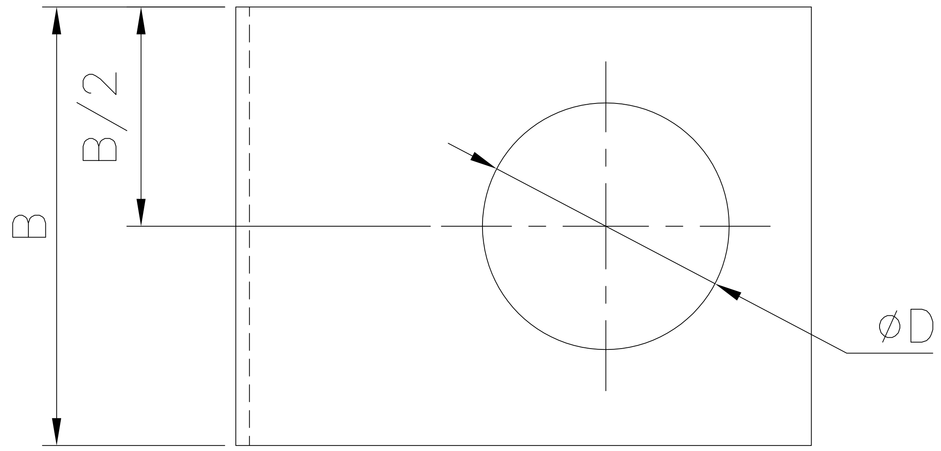

Dimensions, mm

Item no.	Pos.	A	B	C	D	E	Mass,kg	
001	–01	41	32	15	18	8	0.010	for bolt M16x110
002	–02	32	32	15	18	8	0.009	for bolt M16x70

NOTES:-

1. FOR DELINKED BOM REFER COMPUTER BOM NO. 34987000112 .
2. SURFACE COATING SHALL BE OIL-PROOF AND APPLIED ACCORDING TO CUSTOMER TECHNOLOGY.
3. THE REST OF UNSPESIFIED TECHNICAL REQUIREMENTS SHALL BE IN ACCORDANCE WITH NORMATIVE DOCUMENTS OF CUSTOMER.
4. POSTION MEANS ITEM .

GPT ASSY. DRG. NO.	GPT 612001.2000	ITEM NO.	96,97	GPT DRG. NO.	PART-28

ADDITIONAL INFORMATION
WO. NO.- 62007-A-512-01

STATUS OF DRAWING U

DISTRIBUTION OF PRINTS
TRE-1, TRM-3

उत्पाद का प्रकार या ग्राहक /परियोजना का नाम
TYPE OF PRODUCT OR NAME OF CUSTOMER/PROJECT
500 MVA, 765/400/33 KV 1 PHASE, AUTO TRANSFORMER
MEGHA ENGG. & INFRA LTD.
TRFR & REACTOR PKG FOR WUPPTCL

बी एच ई एल
भारत हेवी इलेक्ट्रिकल्स लिमिटेड
भोपाल
BHARAT HEAVY ELECTRICALS LTD.
BHOPAL

	नाम/ NAME	हस्ता/ SIGN	दिनांक/DATE	रे.रि. की संख्या NO. OF VAR
बनाया DRN	SKC		30.04.14	
जाँचा CKD	LALIT		05.05.14	
स्वीकृत APPD	AKP		08.05.14	–

REV.	DATE	ALTERED / CHECKED / APPROVED

विभाग DEPT TRE | कोड CODE 406 | उन. टा. नाप की श्रेणी UNTOL. DIMS. GR. – | उनुपात SCALE | भार कि.ग्रा. WEIGHT (K.G.)

उसे. ड्राईंग का संदर्भ REF. TO ASSY. DRG. 0 498 70 00002 | मद क. ITEM NO. 96,97 | मद संख्या NO. OF ITEM –

शीर्षक/ TITLE
LOCK PLATE

ड्राईंग क./DRAWING NO. 3 498 70 00112 | पुन./REV 00

पृष्ठ क./SHT. No. 01 पृष्ठों की संख्या/NO. OF SHT. 01

REF. DRG. NO. | SIGN. & DATE | INVENTORY NO.

A3

BILL OF MATERIAL	DEP NO	NO OF IT	NO OF VAR	TYPE OF PRODUCT	WORKORDER	DRG NO	CORE CODE	REV
		2	1	500MVA,765KV,1PH. MEGA	62007A51201	34987000112	63870813	00
					TITLE: LOCKING ARRGT. LOCKING ARRGT.			SHT NO 1 OF 1

DU	VAR03	VAR02	VAR01	VAR00	REMARKS	IT NO	DESCRIPTION / MAT SIZE	DRAWING NO / DETAILS	IT. VAR	MATCODE / MAT SPEC	A/C	UT	UNIT WT / QTY	G/S / ZONE
				00001	TO DETAIL SEE TABLE FOR DIM. ZPP	001	LOCKING PLATE TK 1.25, WDT 32, LEN, ID, OD, DIM1			BP1011715970 AA10115		KG	0.010	
				00001	TO DETAIL SEE TABLE FOR DIM. ZPP	002	LOCKING PLATE TK 1.25, WDT 32, LEN, ID, OD, DIM1			BP1011715970 AA10115		KG	0.009	

.019

DISTRIBUTION DETAILS					REV NO. 0	PREP BY	CKD BY	APPD BY	DATE
TRE	TRM				PREP BY	CKD BY	APPD BY	DATE	
1	3				KVA	LK	AKP	24 APR 2014	DRG NO 34987000112 SHT 1 OF 1

FIRST ANGLE PROJECTION

(ALL DIMENSIONS ARE IN mm)

DRG. NO. 3 498 70 00113

THE INFORMATION ON THIS DOCUMENT IS THE PROPERTY OF BHARAT HEAVY ELECTRICALS LIMITED
IT MUST NOT BE USED DIRECTLY OR INDIRECTLY IN ANY WAY DETRIMENTAL TO THE INTEREST OF THE COMPANY

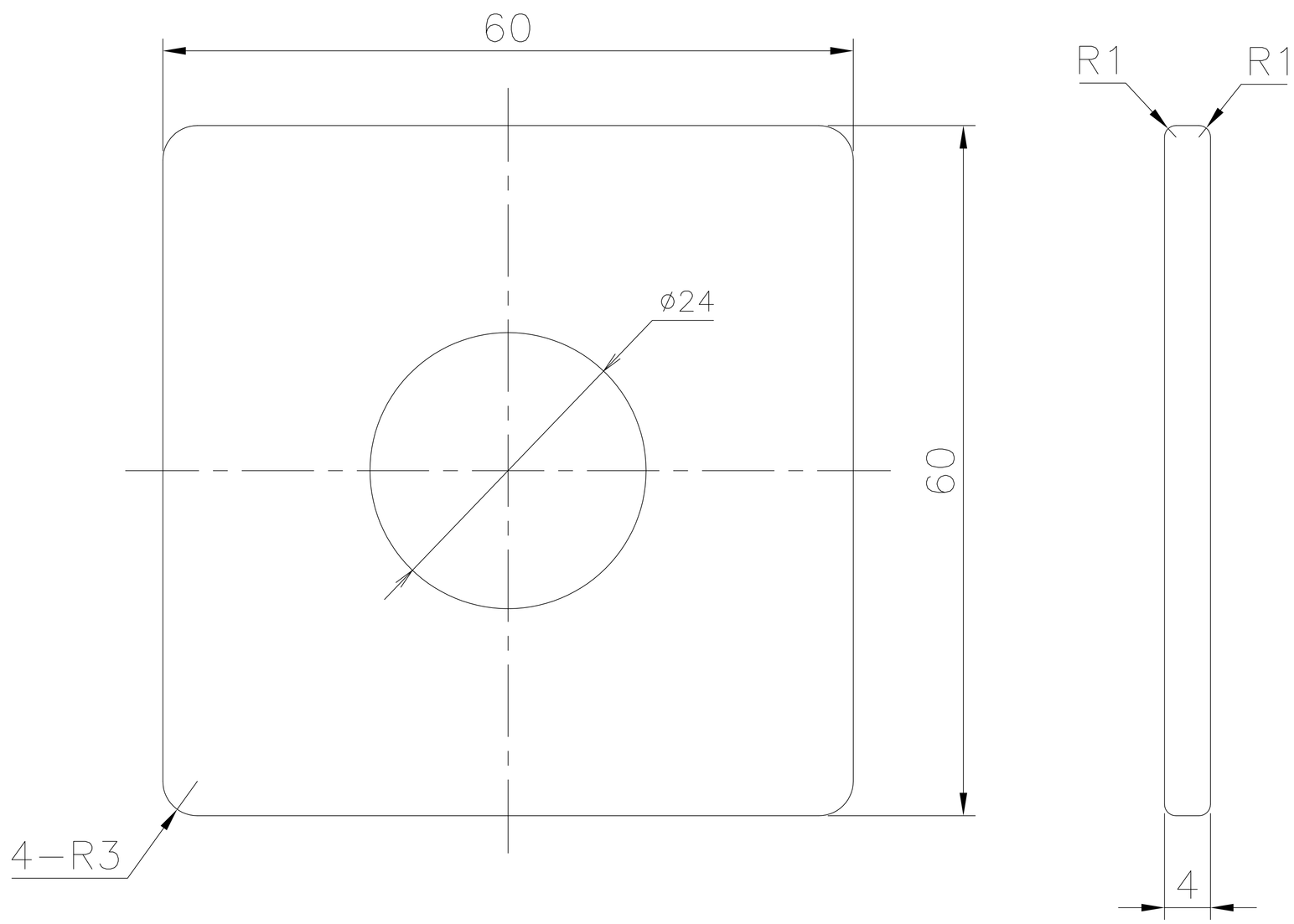

NOTES:-

1. FOR DELINKED BOM REFER COMPUTER BOM NO. 34987000113 .
2. SURFACE COATING - PHOSPHATING COATING AND APPLIED ACCORDING TO CUSTOMER TECHNOLOGY.

GPT ASSY. DRG. NO.	GPT 612001.2000	ITEM NO.	98	GPT DRG. NO.	PART-29

ADDITIONAL INFORMATION
WO. NO.- 62007-A-512-01

STATUS OF DRAWING U

DISTRIBUTION OF PRINTS
TRE-1, TRM-3

उत्पाद का प्रकार या ग्राहक /परियोजना का नाम
TYPE OF PRODUCT OR NAME OF CUSTOMER/PROJECT
500 MVA, 765/400/33 KV 1 PHASE, AUTO TRANSFORMER
MEGHA ENGG. & INFRA LTD.
TRFR & REACTOR PKG FOR WUPPTCL

बी एच ई एल
भारत हेवी इलेक्ट्रिकल्स लिमिटेड
भोपाल
BHARAT HEAVY ELECTRICALS LTD.
BHOPAL

	नाम/ NAME	हस्ता/ SIGN	दिनांक/DATE	ले.रि. की संख्या NO. OF VAR
बनाया DRN	SKC		30.04.14	
जाँचा CKD	LALIT		05.05.14	
स्वीकृत APPD	AKP		08.05.14	-

REV.	DATE	ALTERED / CHECKED / APPROVED

विभाग DEPT	TRE	उन. टल. नाप की श्रेणी UNTOL. DIMS. GR.	अनुपात SCALE	भार कि.ग्रा. WEIGHT (K.G.)	उसे. ड्राईंग का संदर्भ REF. TO ASSY. DRG.	मद क. ITEM NO.	मद संख्या NO. OF ITEM
कोड CODE	406	–		.096	0 498 70 00002	98	–

शीर्षक/ TITLE
WASHER

ड्राईंग क./DRAWING NO. 3 498 70 00113
पुन./REV 00
पृष्ठ क./SHT. No. 01 पृष्ठों की संख्या/NO. OF SHT. 01

INVENTORY NO. | SIGN. & DATE | REF. DRG. NO.

BILL OF MATERIAL	DEP NO	NO OF IT	NO OF VAR	TYPE OF PRODUCT	WORKORDER	DRG NO	CORE CODE	REV
					62007A51201	34987000113	65170007	00
		2	1	500MVA,765KV,1PH. MEGA	TITLE WASHER SQUARE WASHER SQUARE			SHT NO 1 OF 1

DU	VAR03	VAR02	VAR01	VAR00	REMARKS	IT NO	DESCRIPTION / MAT SIZE						DRAWING NO / DETAILS	IT. / VAR	MATCODE / MAT SPEC	A/C	UT	UNIT WT / QTY	G / S / ZONE
				00001	TO DETAIL ZPP	001	WASHER										KG	0.096	
							TK	WDT	LEN	ID	OD	DIM1			AA10108				
							4	60	60										

.096

DISTRIBUTION DETAILS					REV NO. 0	PREP BY	CKD BY	APPD BY	DATE
TRE	TRM				PREP BY	CKD BY	APPD BY	DATE	
1	3				RT	LK	AKP	24 APR 2014	DRG NO 34987000113 SHT 1 OF 1

FIRST ANGLE PROJECTION

(ALL DIMENSIONS ARE IN mm)

DRG. NO. 3 498 70 00115

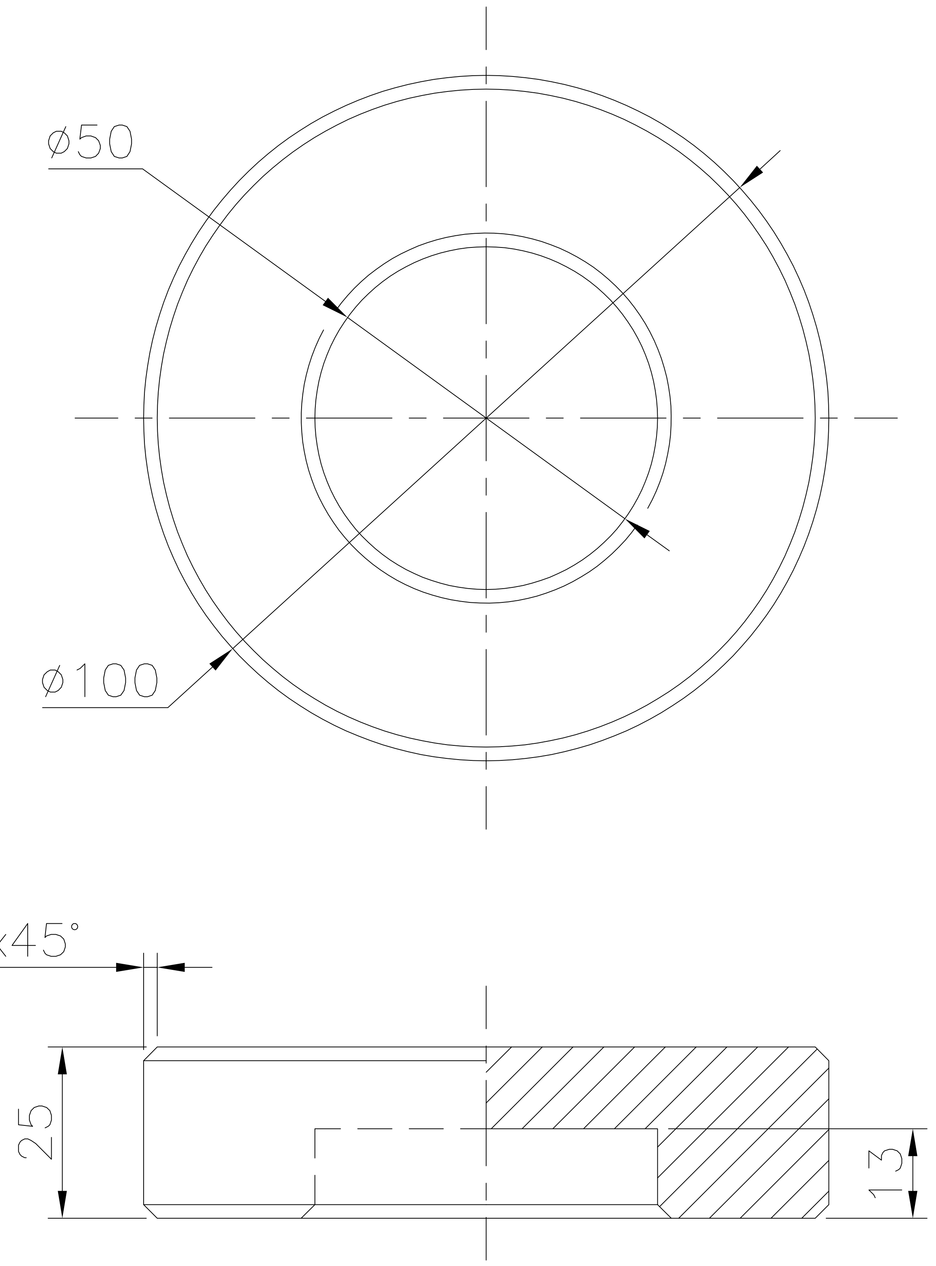

NOTES:-

1. FOR DELINKED BOM REFER COMPUTER BOM NO. 34987000115 .
2. SURFACE COATING SHALL BE OIL-PROOF AND APPLIED ACCORDING TO CUSTOMER TECHNOLOGY.
3. THE REST OF UNSPESIFIED TECHNICAL REQUIREMENTS SHALL BE IN ACCORDANCE WITH NORMATIVE DOCUMENTS OF CUSTOMER .

GPT ASSY. DRG. NO.	GPT 612001.2000	ITEM NO.	100	GPT DRG. NO.	PART-31

ADDITIONAL INFORMATION
WO. NO.- 62007-A-512-01

STATUS OF DRAWING U

DISTRIBUTION OF PRINTS
TRE-1, TRM-3

उत्पाद का प्रकार या ग्राहक /परियोजना का नाम
TYPE OF PRODUCT OR NAME OF CUSTOMER/PROJECT: 500 MVA, 765/400/33 KV 1 PHASE, AUTO TRANSFORMER
MEGHA ENGG. & INFRA LTD.
TRFR & REACTOR PKG FOR WUPPTCL

भारत हेवी इलेक्ट्रिकल्स लिमिटेड
भोपाल
BHARAT HEAVY ELECTRICALS LTD.
BHOPAL

	नाम/ NAME	हस्ता./ SIGN	दिनांक/DATE	रे.रि. की संख्या NO. OF VAR
बनाया DRN	SKC		30.04.14	
जाँचा CKD	LALIT		05.05.14	
स्वीकृत APPD	AKP		08.05.14	-

REV.	DATE	ALTERED / CHECKED / APPROVED

विभाग DEPT TRE	उन. टल. नाप की श्रेणी UNTOL. DIMS. GR. –		अनुपात SCALE	भार कि.ग्रा. WEIGHT (K.G.) 1.34	उसे. ड्राईंग का संदर्भ REF. TO ASSY. DRG. 0 498 70 00002	मद क. ITEM NO. 100	मद संख्या NO. OF ITEM –
कोड CODE 406							

शीर्षक/ TITLE: DISK

ड्राईंग क./DRAWING NO. 3 498 70 00115

पुन./REV 00

पृष्ठ क./SHT. No. 01 पृष्ठों की संख्या/NO. OF SHT. 01

A3

THE INFORMATION ON THIS DOCUMENT IS THE PROPERTY OF BHARAT HEAVY ELECTRICALS LIMITED
IT MUST NOT BE USED DIRECTLY OR INDIRECTLY IN ANY WAY DETRIMENTAL TO THE INTEREST OF THE COMPANY

INVENTORY NO. | SIGN. & DATE | REF. DRG. NO.

BILL OF MATERIAL	DEP NO	NO OF IT	NO OF VAR	TYPE OF PRODUCT	WORKORDER	DRG NO	CORE CODE	REV
					62007A51201	34987000115	65170092	00
		2	1	500MVA,765KV,1PH. MEGA	TITLE BOLT SUPPORT BOLT SUPPORT			SHT NO 1 OF 1

DU	VAR03	VAR02	VAR01	VAR00	REMARKS	IT NO	DESCRIPTION / MAT SIZE						DRAWING NO / DETAILS	IT. / VAR	MATCODE / MAT SPEC	A/C	UT	UNIT WT / QTY	G / S / ZONE
				00001	TO DETAIL	001	DISK										KG	1.340	
							TK	WDT	LEN	ID	OD	DIM1			AA10108				
							25			50	100								

1.34

DISTRIBUTION DETAILS					REV NO. 0	PREP BY	CKD BY	APPD BY	DATE
TRE	TRM				PREP BY	CKD BY	APPD BY	DATE	
1	3				RT	LK	AKP	24 APR 2014	DRG NO 34987000115 SHT 1 OF 1

FIRST ANGLE PROJECTION

(ALL DIMENSIONS ARE IN mm)

DRG. NO. 3 498 70 00116

THE INFORMATION ON THIS DOCUMENT IS THE PROPERTY OF BHARAT HEAVY ELECTRICALS LIMITED
IT MUST NOT BE USED DIRECTLY OR INDIRECTLY IN ANY WAY DETRIMENTAL TO THE INTEREST OF THE COMPANY

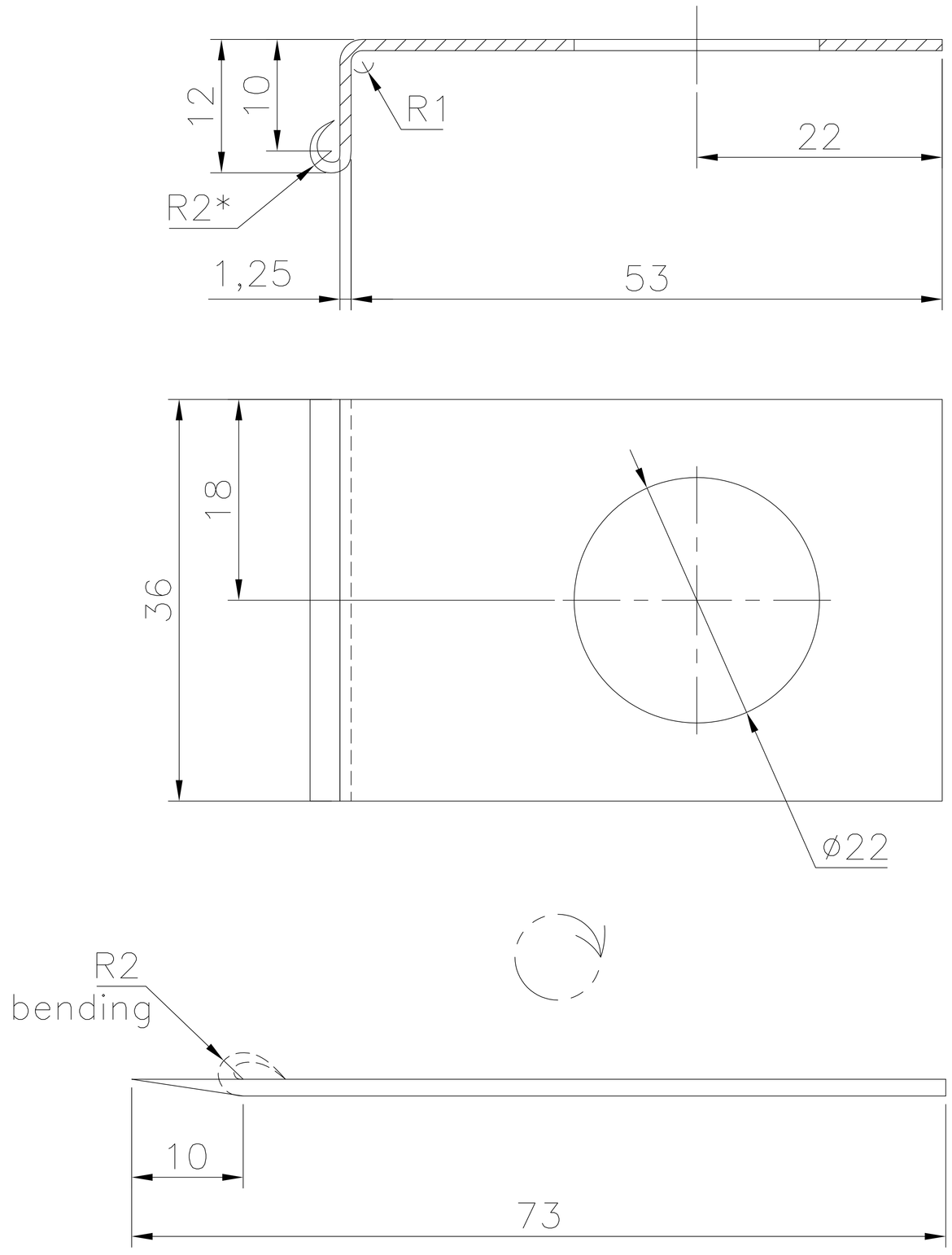

NOTES:-

1. FOR DELINKED BOM REFER COMPUTER BOM NO. 34987000116 .
2. SURFACE COATING SHALL BE OIL-PROOF AND APPLIED ACCORDING TO CUSTOMER TECHNOLOGY.
3. THE REST OF UNSPESIFIED TECHNICAL REQUIREMENTS SHALL BE IN ACCORDANCE WITH NORMATIVE DOCUMENTS OF CUSTOMER .

GPT ASSY. DRG. NO.	GPT 612001.2000	ITEM NO.	101	GPT DRG. NO.	PART-32

ADDITIONAL INFORMATION
WO. NO.- 62007-A-512-01

STATUS OF DRAWING U

DISTRIBUTION OF PRINTS
TRE-1, TRM-3

उत्पाद का प्रकार या ग्राहक /परियोजना का नाम
TYPE OF PRODUCT OR NAME OF CUSTOMER/PROJECT
500 MVA, 765/400/33 KV 1 PHASE, AUTO TRANSFORMER
MEGHA ENGG. & INFRA LTD.
TRFR & REACTOR PKG FOR WUPPTCL

बी एच ई एल
भारत हेवी इलेक्ट्रिकल्स लिमिटेड
भोपाल
BHARAT HEAVY ELECTRICALS LTD.
BHOPAL

	नाम/ NAME	हस्ता/ SIGN	दिनांक/DATE	वे.रि. की संख्या NO. OF VAR
बनाया DRN	SKC		30.04.14	
जाँचा CKD	LALIT		05.05.14	
स्वीकृत APPD	AKP		08.05.14	-

REV.	DATE	ALTERED / CHECKED / APPROVED

विभाग DEPT TRE	उन. टल. नाप की श्रेणी UNTOL. DIMS. GR. –		अनुपात SCALE	भार कि.ग्रा. WEIGHT (K.G.) .016	उसे. ड्राईंग का संदर्भ REF. TO ASSY. DRG. 0 498 70 00002	मद क. ITEM NO. 101	मद संख्या NO. OF ITEM –
कोड CODE 406							

शीर्षक/ TITLE
LOCK PLATE

ड्राईंग क./DRAWING NO. 3 498 70 00116
पुन./REV 00
पृष्ठ क./SHT. No. 01 पृष्ठों की संख्या/NO. OF SHT. 01

INVENTORY NO. | SIGN. & DATE | REF. DRG. NO.

A3

BILL OF MATERIAL	DEP NO	NO OF IT	NO OF VAR	TYPE OF PRODUCT	WORKORDER	DRG NO	CORE CODE	REV
					62007A51201	34987000116	65170750	00
		2	1	500MVA,765KV,1PH. MEGA	TITLE LOCKING PLATE STL. LOCKING PLATE S			SHT NO 1 OF 1

DU	VAR03	VAR02	VAR01	VAR00	REMARKS	IT NO	DESCRIPTION / MAT SIZE						DRAWING NO / DETAILS	IT. / VAR	MATCODE / MAT SPEC	A/C	UT	UNIT WT / QTY	G / S / ZONE
				00001	TO DETAIL PART-32	001	LOCKING PLATE										KG	0.016	
							TK	WDT	LEN	ID	OD	DIM1			AA10115				
							1.25	36	73										

.016

DISTRIBUTION DETAILS					REV NO. 0	PREP BY	CKD BY	APPD BY	DATE
TRE	TRM				PREP BY	CKD BY	APPD BY	DATE	
1	3				RT	LK	AKP	24 APR 2014	DRG NO 34987000116 SHT 1 OF 1

BILL OF MATERIAL	DEP NO	NO OF IT	NO OF VAR	TYPE OF PRODUCT	WORKORDER	DRG NO	CORE CODE	REV
					62007A51201	34987000117	65170750	01
		2	1	500MVA,765KV,1PH. MEGA	TITLE LOCKING PLATE STL. LOCKING PLATE S			SHT NO 1 OF 1

DU	VAR03	VAR02	VAR01	VAR00	REMARKS	IT NO	DESCRIPTION / MAT SIZE						DRAWING NO / DETAILS	IT. VAR	MATCODE / MAT SPEC	A/C	UT	UNIT WT / QTY	G / S / ZONE
				00001	TO DETAIL	001	LOCKING PLATE								BP1011715970		KG	0.021	
							TK	WDT	LEN	ID	OD	DIM1			AA10115				
							1.25	65	330										
				00001	TO DETAIL	002	LOCKING PLATE								BP1011715970		KG	0.240	
							TK	WDT	LEN	ID	OD	DIM1			AA10115				
							1.25	65	370										

.261

DISTRIBUTION DETAILS					REV NO. 1	PREP BY	CKD BY	APPD BY	DATE 01 NOV 2014
TRE	TRM				PREP BY	CKD BY	APPD BY	DATE	
1	3				KVA	LK	AKP	24 APR 2014	DRG NO 34987000117 SHT 1 OF 1

FIRST ANGLE PROJECTION

(ALL DIMENSIONS ARE IN mm)

DRG. NO. 3 498 70 00117

THE INFORMATION ON THIS DOCUMENT IS THE PROPERTY OF BHARAT HEAVY ELECTRICALS LIMITED
IT MUST NOT BE USED DIRECTLY OR INDIRECTLY IN ANY WAY DETRIMENTAL TO THE INTEREST OF THE COMPANY

INVENTORY NO. | SIGN. & DATE | REF. DRG. NO.

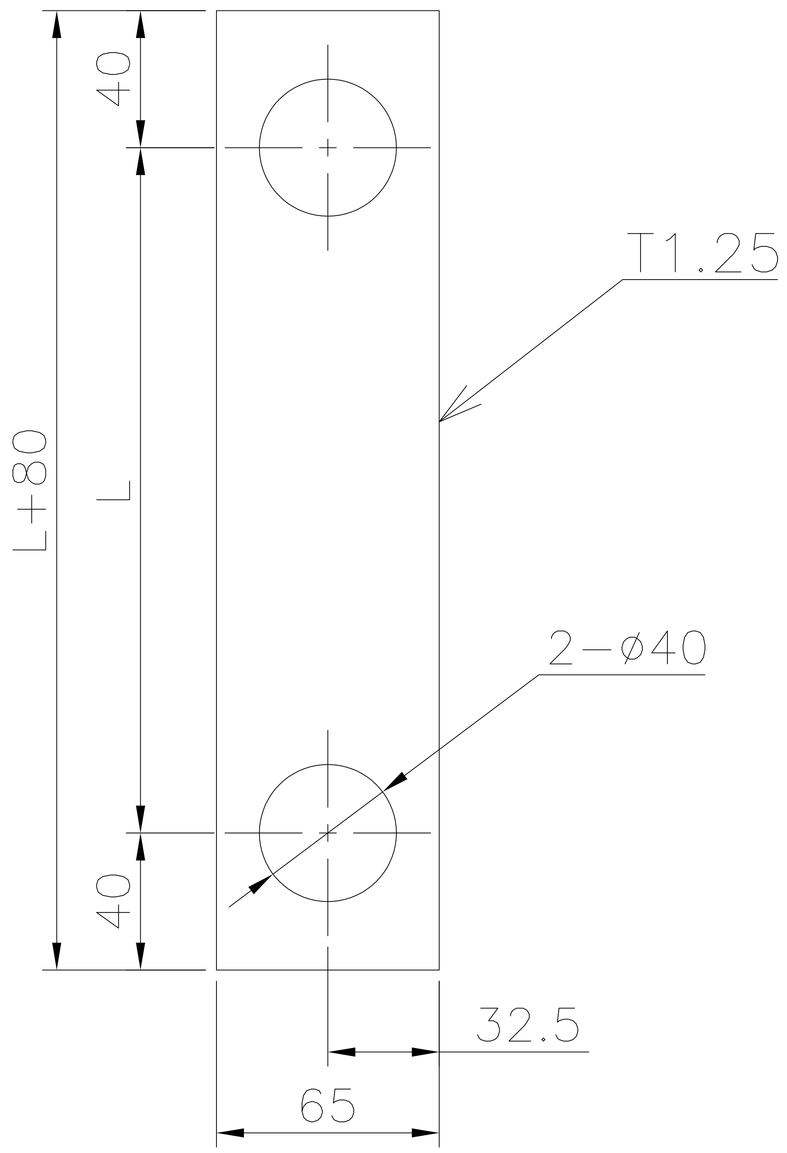

Dimensions, mm

Item no.	Pos.	L	Mass,kg
001	−01	250	0,21
002	−02	290	0.24

NOTES:-

1. FOR DELINKED BOM REFER COMPUTER BOM NO. 34987000117 .
2. SURFACE COATING SHALL BE OIL-PROOF AND APPLIED ACCORDING TO CUSTOMER TECHNOLOGY.
3. THE REST OF UNSPESIFIED TECHNICAL REQUIREMENTS SHALL BE IN ACCORDANCE WITH NORMATIVE DOCUMENTS OF CUSTOMER .

GPT ASSY. DRG. NO.	GPT 612001.2000	ITEM NO.	52	GPT DRG. NO.	PART-33

ADDITIONAL INFORMATION
WO. NO.- 62007-A-512-01

STATUS OF DRAWING U

DISTRIBUTION OF PRINTS
TRE-1, TRM-3

उत्पाद का प्रकार या ग्राहक /परियोजना का नाम
TYPE OF PRODUCT OR NAME OF CUSTOMER/PROJECT
500 MVA, 765/400/33 KV 1 PHASE, AUTO TRANSFORMER
MEGHA ENGG. & INFRA LTD.
TRFR & REACTOR PKG FOR WUPPTCL

बीएच ई एल
भारत हेवी इलेक्ट्रिकल्स लिमिटेड
भोपाल
BHARAT HEAVY ELECTRICALS LTD.
BHOPAL

	नाम/ NAME	हस्ता/ SIGN	दिनांक/DATE	वे.रि. की संख्या NO. OF VAR
बनाया DRN	SKC		30.04.14	
जाँचा CKD	LALIT		05.05.14	
स्वीकृत APPD	AKP		08.05.14	–

REV.	DATE			
01	01/11/14	ALTERED	SKC	
		CHECKED	LALIT	
		APPROVED	AKP	

LENGTH OF IT. 001, 002 CHANGED AS PER DRG.

विभाग DEPT	TRE	अन. टल. माप की श्रेणी UNTOL. DIMS. GR. –	अनुपात SCALE	भार कि.ग्रा. WEIGHT (K.G.)
कोड CODE	406			

डिज़ाइन का संदर्भ REF. TO ASSY. DRG. 0 498 70 00002
मद क्र. ITEM NO.
मद संख्या NO. OF ITEM –

शीर्षक/ TITLE
LOCK PLATE

ड्राईंग क्र./DRAWING NO. 3 498 70 00117
पुन./REV 01
पृष्ठ क्र./SHT. No. 01 पृष्ठों की संख्या/NO. OF SHT. 01

A3

FIRST ANGLE PROJECTION

(ALL DIMENSIONS ARE IN mm)

DRG. NO. 3 498 70 00122

BHARAT HEAVY ELECTRICALS LIMITED

IT MUST NOT BE USED DIRECTLY OR INDIRECTLY IN ANY WAY DETRIMENTAL TO THE INTEREST OF THE COMPANY
THE INFORMATION ON THIS DOCUMENT IS THE PROPERTY OF

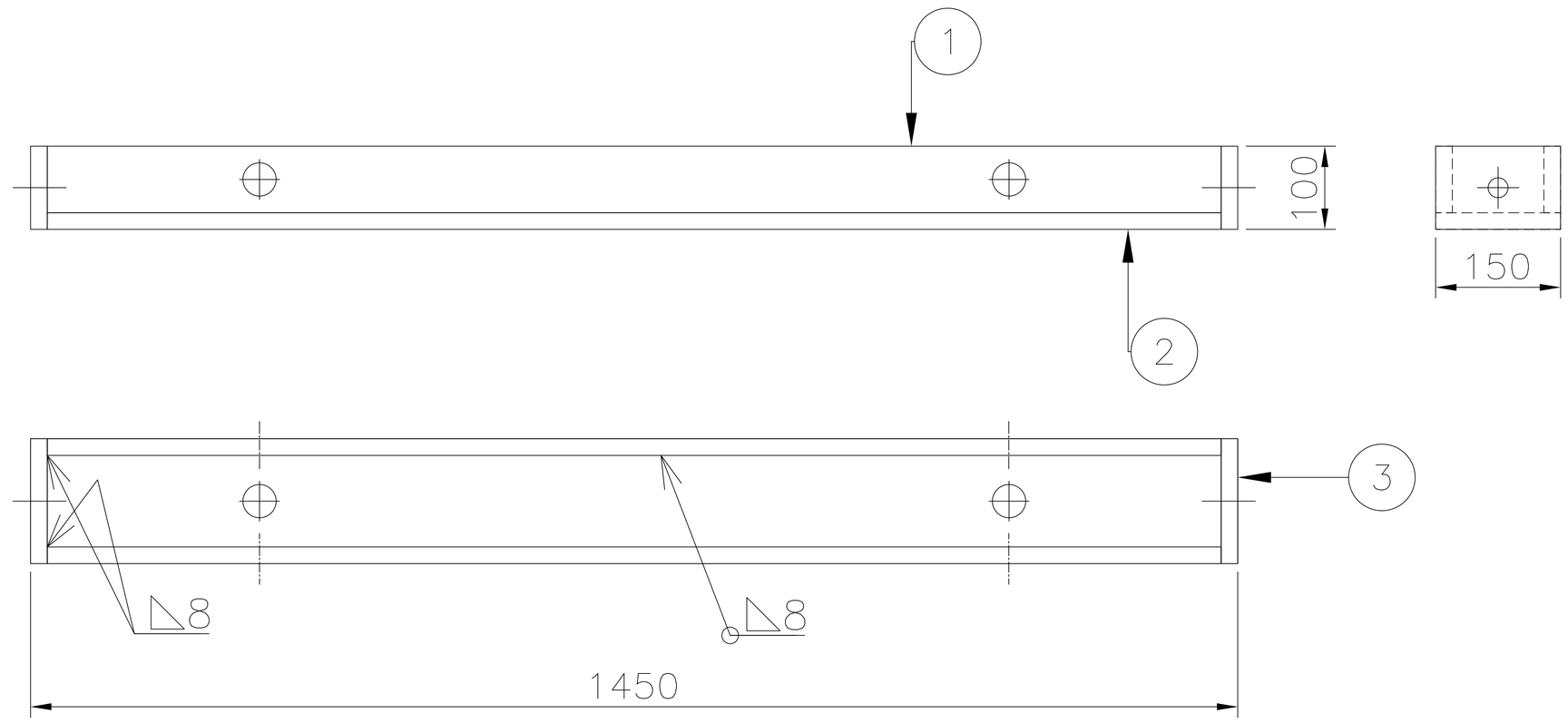

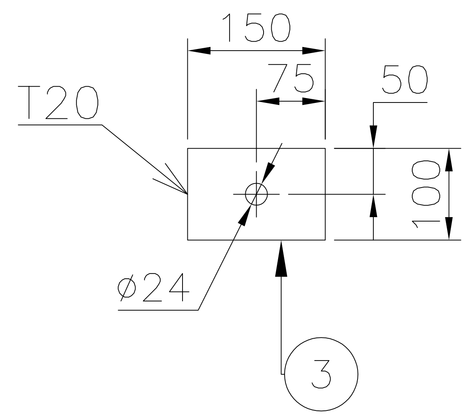

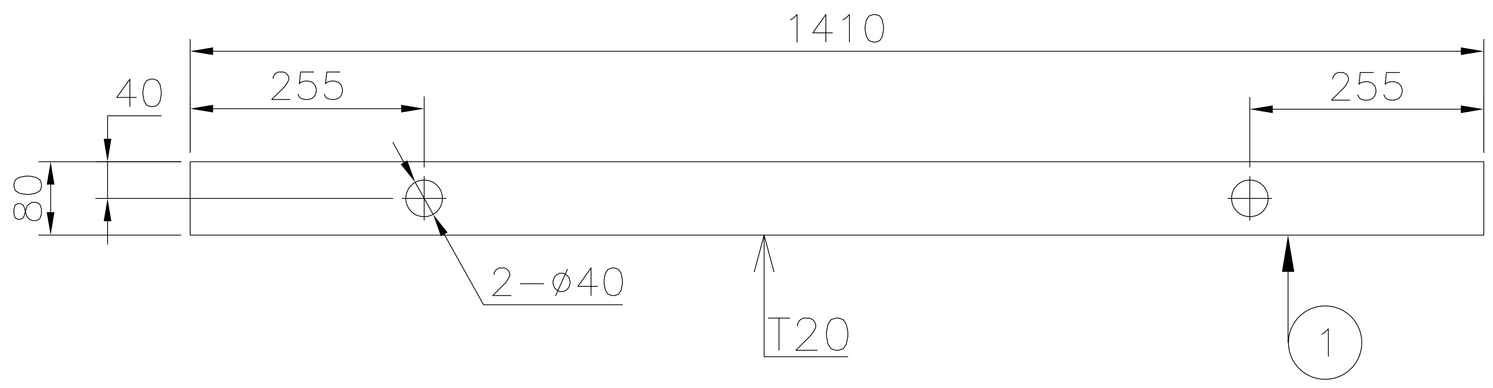

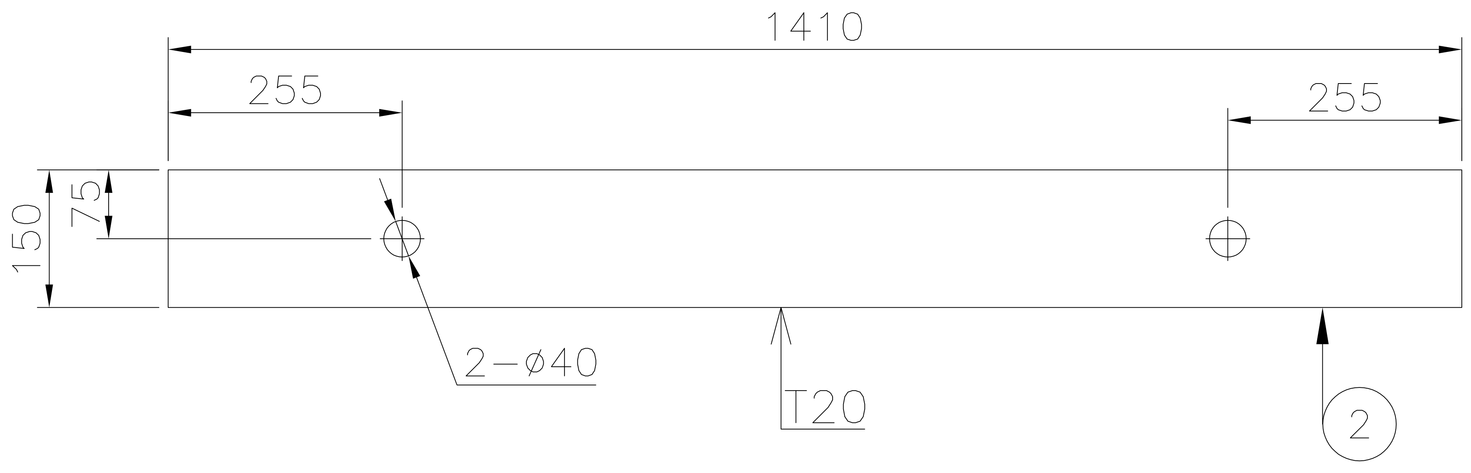

NOTES:-

1. FOR DELINKED BOM REFER COMPUTER BOM NO. 34987000122.
2. SURFACE COATING SHELL BE UNDER CUSTOMER TECHNOLOGICAL INSTRUCTION - OIL PROOF.
3. ALL WELD SEAMS, WHICH ARE NOT SPECIFIED, SHALL BE WELDED BY Δ 8.
4. THE REST OF UNSPECIFIED TECHNICAL REQUIREMENTS SHALL BE IN ACCORDANCE WITH NORMATIVE DOCUMENTS OF CUSTOMER.

Q'TY	NO.	NAME	MATERIAL	DWG. NO. & SPEC MATERIAL CODE	SIZE TxWxL	REMARK
2	3	Plate	MS AA10108		20x100x150	2,33kg
1	2	Plate	MS AA10108		20x150x1410	33,1kg
2	1	Plate	MS AA10108		20x80x1410	17,6kg

GPT ASSY. DRG. NO.	GPT 612001.2000	ITEM NO.	164	GPT DRG. NO.	GPT 612001.2031

ADDITIONAL INFORMATION
WO. NO.- 62007-A-512-01

STATUS OF DRAWING U

DISTRIBUTION OF PRINTS

TRE-1, TRM-3

उत्पाद का प्रकार या ग्राहक /परियोजना का नाम
TYPE OF PRODUCT OR NAME OF CUSTOMER/PROJECT

500 MVA, 765/400/33 KV 1 PHASE, AUTO TRANSFORMER
MEGHA ENGG. & INFRA LTD.
TRFR & REACTOR PKG FOR WUPPTCL

बीएचईएल
भारत हेवी इलेक्ट्रिकल्स लिमिटेड
भोपाल
BHARAT HEAVY ELECTRICALS LTD.
BHOPAL

	नाम/ NAME	हस्ता/ SIGN	दिनांक/DATE	से.वि. की संख्या NO. OF VAR
बनाया DRN	SKC		30.04.14	
जाँचा CKD	LALIT		05.05.14	
स्वीकृत APPD	AKP		08.05.14	–

REV.	DATE	
		ALTERED
		CHECKED
		APPROVED

विभाग DEPT	कोड CODE	उन. टल. माप की श्रेणी UNTOL. DIMS. GR.	उलुपात SCALE	भार कि.ग्रा. WEIGHT (K.G.)	उसे. ड्राईंग का संदर्भ REF. TO ASSY. DRG.	मद क. ITEM NO.	मद संख्या NO. OF ITEM
TRE	406	–		72.96	0 498 70 00002	164	–

शीर्षक/ TITLE

BRACKET

ड्राईंग क./DRAWING NO. 3 498 70 00122

पुन./REV 00

पृष्ठ क./SHT. No. 01 पृष्ठों की संख्या/NO. OF SHT. 01

INVENTORY NO. | SIGN. & DATE | REF. DRG. NO.

A3

BILL OF MATERIAL	DEP NO	NO OF IT	NO OF VAR	TYPE OF PRODUCT	WORKORDER	DRG NO	CORE CODE	REV
					62007A51201	34987000122	65170706	00
		5	1	500MVA,765KV,1PH. MEGA	TITLE MAIN, TOP CROSS BEAM MAIN, TOP CROSS			SHT NO 1 OF 1

DU	VAR03	VAR02	VAR01	VAR00	REMARKS	IT NO	DESCRIPTION / MAT SIZE	DRAWING NO / DETAILS	IT. / VAR	MATCODE / MAT SPEC	A/C	UT	UNIT WT / QTY	G/S / ZONE
				00002	TO DETAIL	001	PLATE TK 20, WDT 80, LEN 1410, ID, OD, DIM1			AA10108		KG	17.600	
				00001	TO DETAIL	002	PLATE TK 20, WDT 150, LEN 1410, ID, OD, DIM1			AA10108		KG	33.100	
				00002	TO DETAIL	003	PLATE TK 20, WDT 100, LEN 150, ID, OD, DIM1			AA10108		KG	2.330	

72.96

DISTRIBUTION DETAILS					REV NO. 0	PREP BY	CKD BY	APPD BY	DATE
TRE	TRM				PREP BY	CKD BY	APPD BY	DATE	
1	3				RT	LK	AKP	24 APR 2014	DRG NO 34987000122 SHT 1 OF 1

FIRST ANGLE PROJECTION (ALL DIMENSIONS ARE IN mm)

REV.	DATE	ALTERED / CHECKED / APPROVED	REV.	DATE	ALTERED / CHECKED / APPROVED

ADDITIONAL INFORMATION	WO. NO.- 62007-A-512-01
STATUS OF DRAWING	U
DISTRIBUTION OF PRINTS	TRE-1, TRM-3

THE INFORMATION ON THIS DOCUMENT IS THE PROPERTY OF BHARAT HEAVY ELECTRICALS LIMITED
IT MUST NOT BE USED DIRECTLY OR INDIRECTLY IN ANY WAY DETRIMENTAL TO THE INTEREST OF THE COMPANY

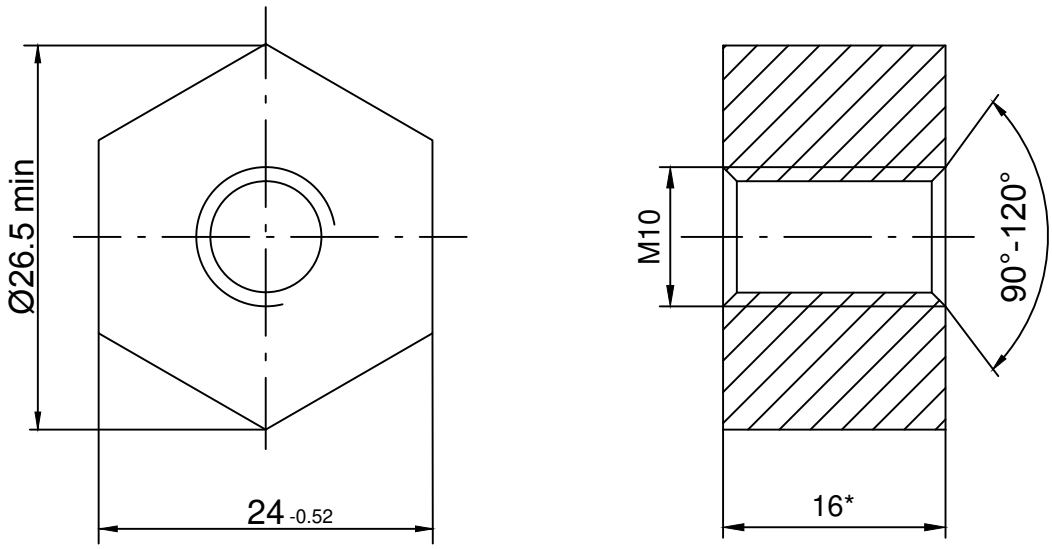

1. FOR DELINKED BOM REFER COMPUTER BOM NO. 44987000029.
2. * REFER DIMENSION.

REF. DRG. NO.

GPT ASSY. DRG. NO.	GPT612001.2003	ITEM NO.	3	GPT DRG. NO.	GPT.612001.2009

उत्पाद का प्रकार या ग्राहक /परियोजना का नाम
TYPE OF PRODUCT OR NAME OF CUSTOMER/PROJECT

500 MVA, 765/400/33 KV 1 PHASE, AUTO TRANSFORMER
MEGHA ENGG. & INFRA LTD.
TRFR & REACTOR PKG FOR WUPPTCL

SIGN. & DATE

भारत हेवी इलेक्ट्रीकल्स लिमिटेड
भोपाल
BHARAT HEAVY ELECTRICALS LTD.
BHOPAL

	नाम NAME	हस्ता. SIGN	दिनांक DATE	वे.रि. की संख्या NO. OF VAR.
बनाया DRN	SKC		30.04.14	-
जाँचा CKD	LALIT		05.05.14	
अनुमोदित APPD	AKP		08.05.14	

INVENTORY NO.

विभाग DEPT	अन. टाल. नाप की श्रेणी UNTOL.DIMS. GR.		अनुपात SCALE	भार कि.ग्रा. WEIGHT (K.G.)	असे.ड्राईंग का संदर्भ REF. TO ASSY. DRG.	मद क्र. ITEM NO.	मद संख्या NO. OF ITEM
TRE	–			.05	2 498 70 00016	3	-
कोड CODE 406							

शीर्षक/ TITLE

GROUNDING PAD

आरेख क्र./DRAWING NO. 4 498 70 00029

पुन/ REV. 00

पृष्ठ क्र./SHT. No. 01 पृष्ठों की संख्या/NO. OF SHT. 01

A4

BILL OF MATERIAL	DEP NO	NO OF IT	NO OF VAR	TYPE OF PRODUCT	WORKORDER	DRG NO	CORE CODE	REV
	406	2		105 MVA , 1PH AUTO M/S BI	62019P51201	44987000029	65170222	00
					TITLE: TIGHTENING NUT TIGHTENING NUT			SHT NO 1 OF 1

DU	VAR03	VAR02	VAR01	VAR00	REMARKS	IT NO	DESCRIPTION / MAT SIZE	DRAWING NO / DETAILS	IT. / VAR	MATCODE / MAT SPEC	A/C	UT	UNIT WT / QTY	G / S / ZONE
				00001	GPT.612001.2009	001	GROUNDING PAD TK WDT LEN ID OD DIM1			AA10740		KG	0.050	

.05

DISTRIBUTION DETAILS				REV NO. 0	PREP BY	CKD BY	APPD BY	DATE
TRE	TRM	FTM		PREP BY	CKD BY	APPD BY	DATE	
1	3	6		LK	AKP	AKP	07 MAY 2014	DRG NO 44987000029 SHT 1 OF 1

FIRST ANGLE PROJECTION

(ALL DIMENSIONS ARE IN mm)

DRG.NO. 34997000093

NOTES:-

1- BEFORE SHIPPING CORE CLAMPING STRUCTURE FROM FTM/ANCILLARY INSPECTION SHOULD BE DONE TO MAKE SURE THAT THE OVERALL DIMENSIONS ARE NOT EXCEEDING THE DIMENSIONS GIVEN ON ASSEMBLY.
2- FOR WELDING DETAILS REFER DRG.34997000095. ALL OTHER WELDS TO BE Z8◺ CONTINUOUS UNLESS OTHERWISE SPECIFIED.
3- BUTT WELD IF PROVIDED IN DRAWING TO BE TESTED BY ULTRASONIC TESTING AS PER BP0850176 AND ACCEPTANCE TO BE DONE AS PER AA622101,GRADE-3 AND ALL OTHER WELD TO BE DP TESTED.
4- TOLERANCE IN CLAMPING STRUCTURE IS AS PER TR10199T AND TR10190T.
5. SLOTS GIVEN IN CORE CLAMP PLATE IS TO BE DONE BY MACHINING PROCESS ONLY (WATER JET , MILLING OPERATION ETC) .
6- SHARP EDGES SHOULD BE REMOVED PROPERLY. MINIMUM RADIUS OF CHAMFERING TO BE R3.
7- ALL THE HOLES IN THE CLAMP PLATE AND END FRAME MUST BE DONE BY BORING PROCESS ONLY. FLAME CUT IS NOT ALLOWED.
8- DURING MATCHING OF CLAMPING STRUCTURE,CLAMP PLATE AND END FRAME SHOULD HAVE COMPLETE SURFACE CONTACT AT PIN POSITION.
9- INSIDE AREA OF HOLE IN CLAMP PLATE FOR LOCKING PIN IS NOT TO BE PAINTED..
10-ALL PLATES EQUAL TO 16 MM THICKNESS AND ABOVE SHALL BE ULTRASONIC TESTED AS PER BHEL SPEC. AA0850120/ASTMA435 . FABRICATOR HAS TO PRODUCE CO-RELATED TEST CERTIFICATE FROM MILL OR TO CARRY OUT UT TEST AT THEIR WORKS BY BHEL APPROVED NDT AGENCY. BHEL/TPIA SHALL RECORD REVIEW THE TEST CERTIFICATES.
11- DIMENSION OF PIN PAD ASSEMBLY SHOULD BE MEASURED AND CHECKED. APPROVAL FROM TRE IS REQUIRED.
12- CLAMPING STRUCTURE AND END FRAME TO BE PAINTED AS PER TR10005P SERIAL NO. 22 CALLED ON RESPECTIVE DRAWING/WORK ORDER. ADHESION OF PAINT IS VERY CRITICAL AND SHALL BE CHECKED & WITNESSED BY QIX/TPIA.
13- SIZE OF PLATE MENTIONED IN BOM FOR DEVELOPED LENGTH OF ROLLED AND BEND ITEMS ARE BASED ON MEAN DIMENSIONS. FTM TO NOTE THAT BENDING AND ROLLING ALLOWANCES ARE TO BE ADDED IF REQUIRED.
14. FOR CUT OUTS ON END FRAME AND CLAMPING STRUCTURE, REFER RESPECTIVE DETAIL DRAWING.
15- MATERIAL TO AA10119 MAY BE USED AS AN ALTERNATE TO AA10108 AND VICE VERSA FOR MS PLATES.
16- CRITICAL DIMENSIONS MARKED AS (CR) ON THE DRAWINGS ARE IMPORTANT AND ARE TO BE ENSURED BY QC.
17- EARTHING PAD TOP FACE SHOULD NOT BE PAINTED DURING PAINTING OF END FRAME AND CLAMPING STRUCTURE.
18- MATERIAL TO SPEC AA10740 CAN BE USED AS AN ALTERNATIVE TO AA10739 AND VICE VERSA FOR STAINLESS STEEL PARTS.
19- FOR INSPECTION OF END FRAME CHECKLIST QC/TCB/EF/01 & QC/TCB/EF/02 AND ANY SPECIFIED CHECKLIST APPLICABLE FOR END FRAME SHALL BE FOLLOWED.
20. ALL OTHER ITEMS WHICH ARE UNAPPROACHABLE AFTER ASSEMBLY LIKE DASHPOT GUIDE ETC. SHALL BE NECESSARILY SHOT BLASTED BEFORE ASSEMBLY.
21. THREAD OF THE PIN WELDED ON HV AND LV SIDE OF CLAMP PLATE SHOULD MATCH WITH RESPECTIVE NUT.IT SHOULD BE CHECKED.
22. THREAD OF DASHPOT GUIDE SHOULD MATCH WITH RESPECTIVE LOCKING NUT. IT SHOULD BE CHECKED.
23. FOR HTS PLATE MATERIAL TO SPEC AA1022 , WHEREVER CALLED IN THE DRAWING SHOULD BE AS PER IS2062 GRADE E350 (ALL QUALITY VIZ. A, BR, B0, C ARE ACCEPTABLE).

THE INFORMATION ON THIS DOCUMENT IS THE PROPERTY OF BHARAT HEAVY ELECTRICALS LIMITED.
IT MUST NOT BE USED DIRECTLY OR INDIRECTLY IN ANY WAY DETRIMENTAL TO THE INTEREST OF THE COMPANY.

REF.DRG.NO.

SIGN.DATE

REV	DATE				REV	DATE				REV	DATE			
03	29/03/22	ALTERED	KDS		02	12/04/17	ALTERED	NKM		01	08/04/16	ALTERED	NiTiN	
		CHECKED	NKM				CHECKED	A.D				CHECKED	A.D	
		APPROVED	NKM				APPROVED	A.D				APPROVED	A.D	
ZONE	NOTE NO. 23 ADDED.				ZONE	NOTE NO. 03 MODIFIED.				ZONE	NOTE NO. 010 MODIFIED.			

ADDITIONAL INFORMATION: STANDARD

STATUS OF DRAWING: U

DISTRIBUTION OF PRINTS

TRE	TRX	TRM	FTM	QC
1	1	3	6	1

TYPE OF PRODUCT OR NAME OF CUSTOMER/PROJECT: TRANSFORMER/REACTOR

BHARAT HEAVY ELECTRICALS LTD. BHOPAL

	NAME	SIGN	DATE
DRN	NM	–SD–	15.03.16
CHD	AKD		
APPD	AKD	–SD–	05.03.16

NO.OF VAR: –

DEPT TRE

CODE 406

SCALE: –

WEIGHT(kg): –

REF TO ASSY DRG: –

ITEM NO.: –

NO.OF ITEM

/TITLE

NOTES FOR CORE CLAMPING STRUCTURE

DRAWING NO. 34997000093

REV 03

SHT NO.

NO.OF SHT.

FIRST ANGLE PROJECTION

(ALL DIMENSIONS ARE IN mm)

DRG.NO. 34997000095

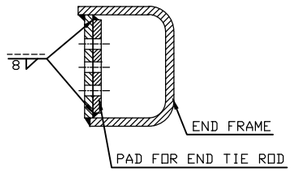

1. **WELDING BETWEEN END FRAME &PAD FOR END TIE ROD**

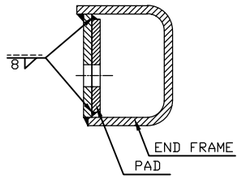

2. **WELDING BETWEEN END FRAME & PAD FOR GUIDE PIN**

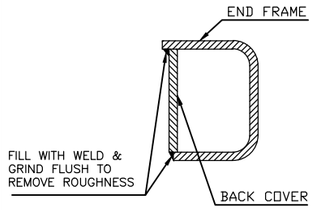

3. **WELDING OF END FRAME PART & BACK COVER**

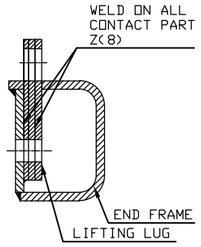

4. **WELDING BETWEEN END FRAME & LIFTING LUG**

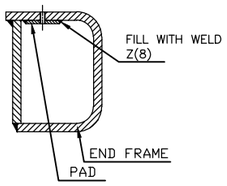

5. **WELDING BETWEEN END FRAME & PAD FOR CROSS/LOCKING BEAM**

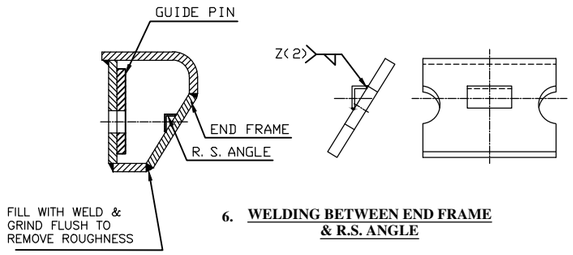

6. **WELDING BETWEEN END FRAME & R.S. ANGLE**

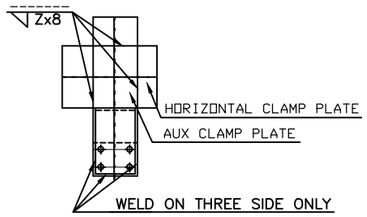

7. **WELDING BETWEEN HORIZONTAL CLAMP PLATE & AUX CLAMP PLATE**

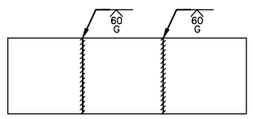

8. **WELDING BETWEEN PLATE OF END FRAME**

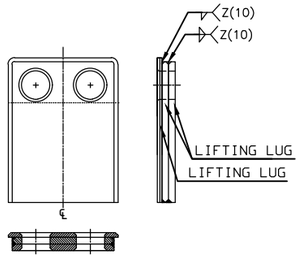

9. **WELDING BETWEEN LIFTING LUG**

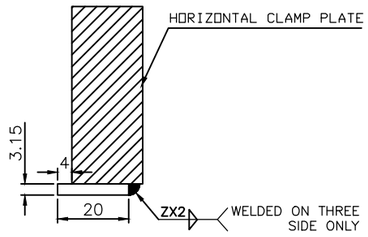

10. **WELDING BETWEEN HORIZONTAL CLAMP PLATE & INSULATION SUPPORT PLATE**

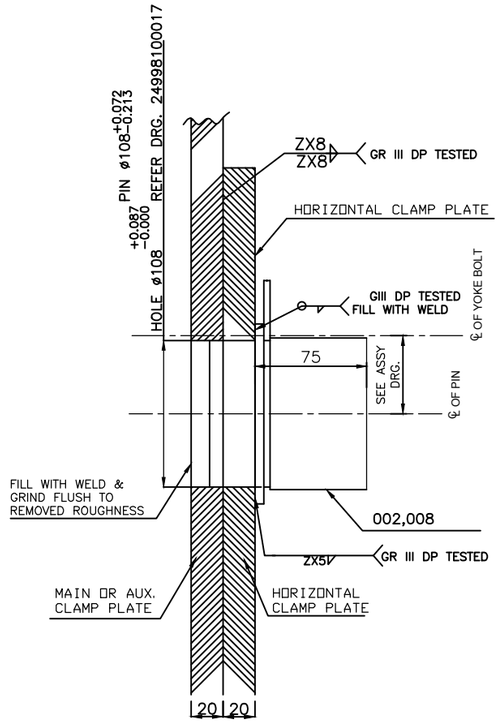

VIEW PIN

14. **WELDING BETWEEN CLAMP PLATE & LOCKING PIN**

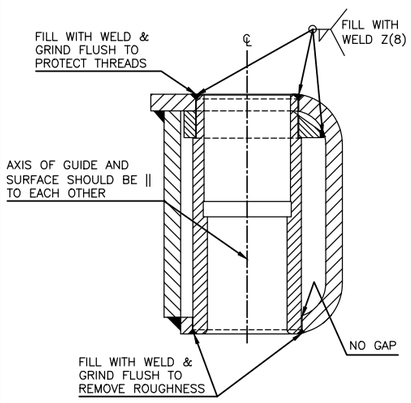

11. **WELDING BETWEEN END FRAME & DASHPOT GUIDE.**

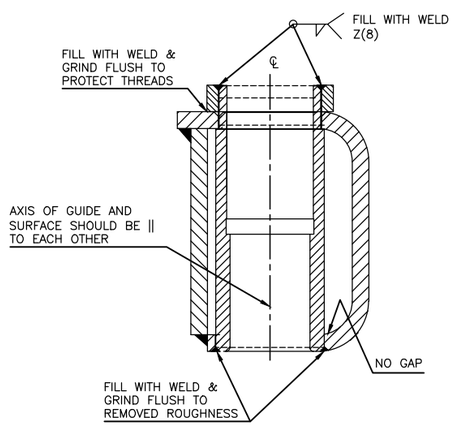

12. **WELDING BETWEEN END FRAME & DASHPOT GUIDE.**

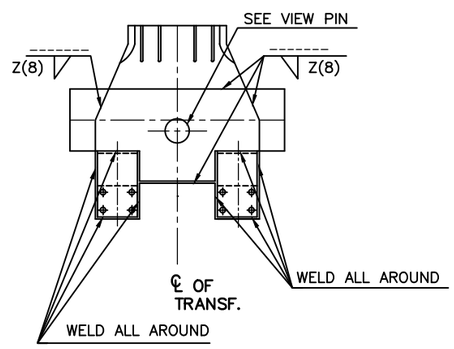

13. **WELDING BETWEEN HORIZONTAL CLAMP PLATE & MAIN CLAMP PLATE**

NOTE TO SHOP :-

1-WELD TO BE FREE FROM BLOW HOLES, CREVICES,UNDERCUT &OTHER WELDING DEFECT.

2-CHECK ALL THE GAPS INSIDE THE END FRAME WHERE SHOTS CAN BE ENTRAPPED. IT SHOULD BE FILLED BY WELD BEFORE WELDING COVERING PLATE.

REV	DATE	ALTERED	CHECKED	APPROVED	
02	08/02/22	SKG	SKG	NM	
01	12/09/18	SKG	NM	AKD	

WELDING DETAIL MODIFIED

NUMBERING DONE FOR WELDING DETAILS & DETAIL AT POINT 13 MODIFIED.

ADDITIONAL INFORMATION: STANDARD

STATUS OF DRAWING: U

DISTRIBUTION OF PRINTS

TRE	TRX	TRM	FTM	QC
1	1	3	6	1

TYPE OF PRODUCT OR NAME OF CUSTOMER/PROJECT: TRANSFORMER/REACTOR

BHARAT HEAVY ELECTRICALS LTD. BHOPAL

	NAME	SIGN	DATE
DRN	SKG		10.12.16
CHD	NM		
APPD	AKD		

NO.OF VAR: –

DEPT TRE

CODE 406

WEIGHT(kg): –

REF TO ASSY DRG: –

ITEM NO.: –

NO.OF ITEM

TITLE: WELDING DETAILS FOR CORE CLAMPING STRUCTURE

DRAWING NO. 34997000095

REV 02

SHT NO.

NO.OF SHT.

THE INFORMATION ON THIS DOCUMENT IS THE PROPERTY OF BHARAT HEAVY ELECTRICALS LIMITED. IT MUST NOT BE USED DIRECTLY OR INDIRECTLY IN ANY WAY DETRIMENTAL TO THE INTEREST OF THE COMPANY.

REF.DRG.NO.

SIGN.DATE

MANUFACTURING QUALITY PLAN

BHEL, PIPLANI BHOPAL	Customer	Item	MQP No.:	Rev. No.	Rev. Date	BHEL W.O. No	Page
	M/s MEGHA ENGG. & INFRA LTD.	AUTO TRANSFORMER UPTO 765 KV	QA/TCB/31/744	03	25.08.2015	62007, 62009, 62010, 62011, 62014 & 62015-A-512-01	1

Quality Plan for :

Sr.N	W.O. No.	Item & Rating	Project Site
1.	62007-A-512 -01	14X500 MVA. 765/400/33 KV, 1- Ph Auto Transformer	Hapur & Greater Noida "AIS" S/s
2.	62009-A-512-01	4X500 MVA, 400/220/33 KV, 3-Ph Auto Transformer	Hapur & Sikendrabad "AIS" S/s
3.	62010-A-512-01	2X315 MVA, 400/220/33 KV, 3-Ph Auto Transformer	Greater Noida "AIS" S/s
4	62011-A-512-01	2X200 MVA, 400/132/33 KV, 3-Ph Auto Transformer	Nehtaur "AIS" S/s
5	62014-A-512-01	4X500 MVA, 400/220/33 KV, 3-Ph Auto Transformer	Ataur & Indrapuram "GIS" S/s
6	62015-A-512-01	2X315 MVA, 400/220/33 KV, 3-Ph Auto Transformer	Dasna "GIS" S/s

CODE :

Code 1. Indicates place where testing planned to be performed i.e. Inspection location.

- A At Equipment Manufacturer's works
- B At Component Manufacturer's works
- C At Authorized Distributor's place
- D At Independent Lab
- E At Turn Key Contractor's place
- F Not specified

Code 2. Indicates who has to perform the tests i.e. Testing Agency

- J The Equipment Manufacturer
- K The component Manufacturer
- L The Third Party
- M The Turnkey Contractor

Code 3. Indicates who shall witness the tests i.e. Witnessing Agency

- P Component Manufacturer itself
- Q Component Manufacturer and Equipment Manufacturer or authorized representative
- R Component Manufacturer, Equipment Manufacturer and Contractor
- S Equipment Manufacturer itself
- T Equipment Manufacturer and Contractor
- U Equipment Manufacturer, Contractor and Customer (jointly)
- V Third Party itself

Code 4. Review of Test Reports / Certificates

- W By Equipment Manufacturer
- X By Contractor during product/process inspection
- Y By Customer during product/process inspection
- Z By Contractor and/or Customer during product/ process inspection

Megha Engineering and Infrastructure Limited

CAT-I

(SATISH NAYAR)
Dy. General Manager

8/9/15
(Date)

Cat

- I Approved
- II Approved, subject to incorp. of comments.
- III Returned for correction / Re-submission as per comments.
- IV Accepted for information / reference.
- V Not Approved / Rejected

Code 5. Whether specific approval of sub-vendor, Component made is envisaged.

- E Envisaged
- N Not Envisaged.

Code 6. Whether test records required to be submitted after final inspection for issuance of CIP/MICC

- Y Yes
- N No

CMTC Component Manufacturer Test Certificate

EMTC Equipment Manufacturer Test Certificate. **CIP**- Customer Inspection Point

Note :

1. Manufacturing shall commence only after specific written Confirmation / Manufacturing clearance.
2. The approval of drawings / documents by WUPPTCL / MEIL shall not absolve the contractor from its liability and responsibility for manufacturing, supplying and installing the system in accordance with the technical specifications, codes / standards and satisfactory performance of equipment during the warranty & defect liability period.

सुरेश कुमार गुप्ता / S. K. GUPTA

PROCESS FLOW DIAGRAM FOR 765 KV POWER TRANSFORMER BHEL, BHOPAL

RM	INPROCESS INSPECTION	FINAL TEST	SHIPMENT

Steel, Steel Tubes
- Finish
- Chemical & Physical properties

→ **Steel fabricated items Tank, Tank Cover, Conservator, Radiator, Turrets & Pipe work**

- WPS approval
- Deployment of approved welders
- Weld Quality & Sharp Edges/undercut
- DP Test on Load Bearing member
- Air Pressure & Vacuum Test
- Painting thickness, adhesion & shade
- Cleanliness & Foreign Particle

→ A

Copper Conductor (PICC/CTC)

→ **Coil Making**

- Conductor identifications for Drum label
- BPS & deployment of approved Brazers
- Coil Dimensions
- Electrical Test

→ B

Insulations

→ **Insulation cutting**

- Proper storage

→ C

Megha Engineering & Infrastructures Ltd.

सुरेश कुमार गुप्ता / S. K. GUPTA
उप महाप्रबंधक / Dy. General Manager
गुणता आश्वासन-टी.सी.बी./Quality Assurance-TCB
बीएच.ई.एल., भोपाल / B.H.E.L., BHOPAL

RM	INPROCESS INSPECTION	FINAL TEST	SHIPMENT

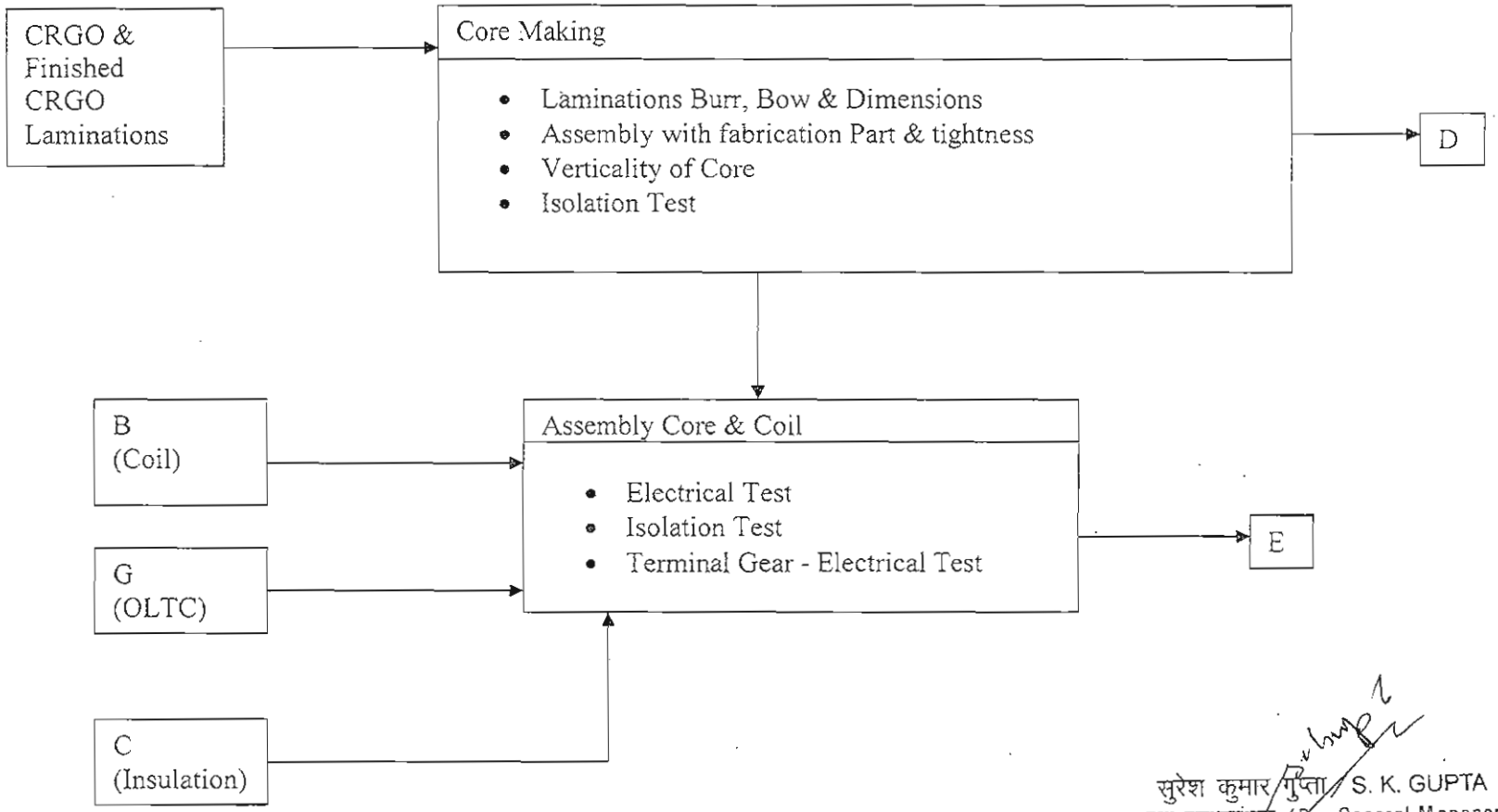

सुरेश कुमार गुप्ता / S. K. GUPTA
उप महाप्रबंधक / Dy. General Manager
गुणता आश्वासन-टी.सी.बी. / Quality Assurance-TCB
बी.एच.ई.एल., भोपाल / B.H.E.L., BHOPAL

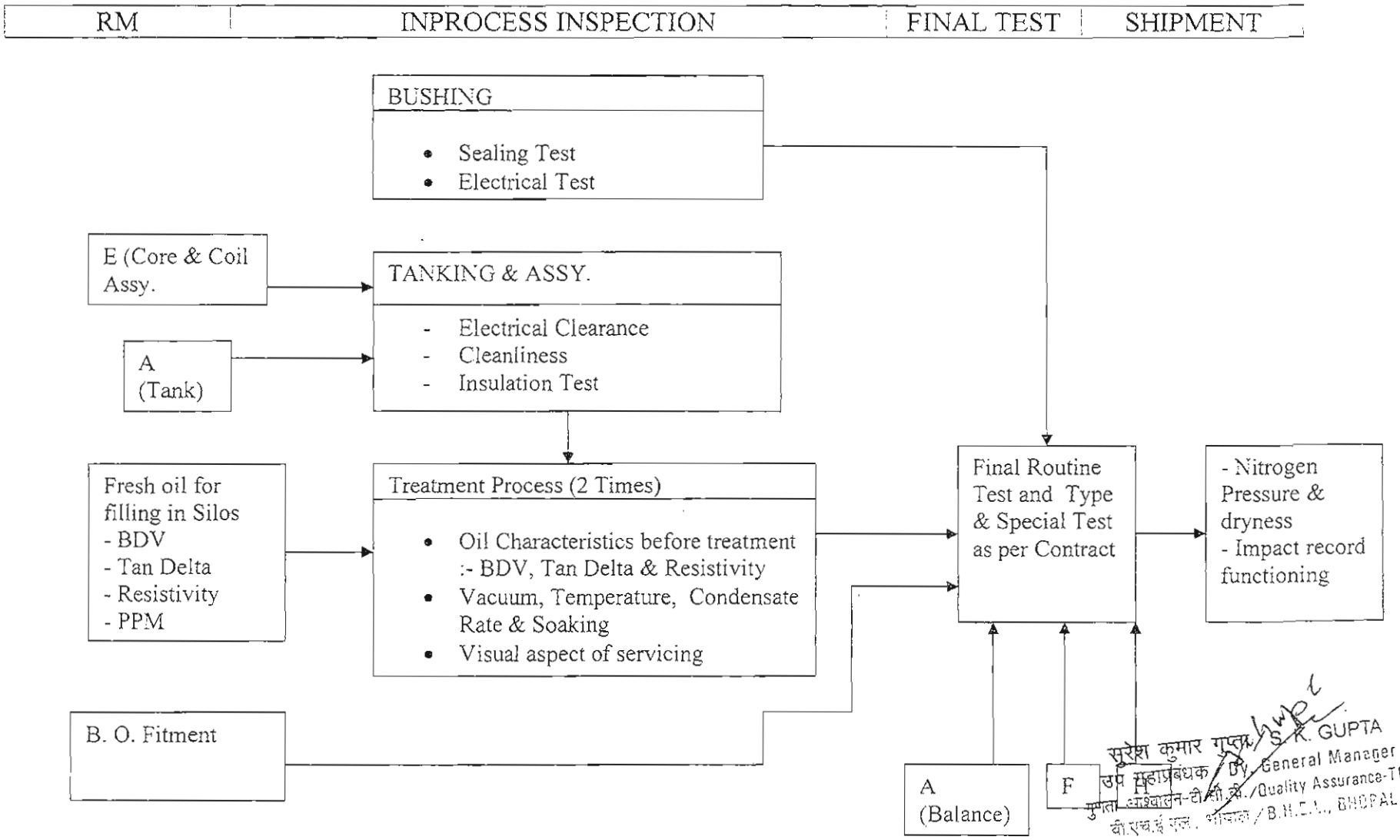

Megha Engineering & Infrastructures Ltd.

सुरेश कुमार गुप्ता / S. K. GUPTA
उप महाप्रबंधक / Dy. General Manager
गुणता आश्वासन-टी.सी.ई. / Quality Assurance-TCI
बी.एच.ई.एल., भोपाल / B.H.E.L., BHOPAL

RM	INPROCESS INSPECTION	FINAL TEST	SHIPMENT

RADIATOR

- Air Pressure Test → F

OLTC

-ND Test (MD Assy.
- Diverter Test for 400 Mechanical operation & Timing Test
- OC Pressure Test (OC Assy.)
- One complete cycle Test on Assembled OLTC

→ G

RTCC Panel

- Scratch Test (Ref.IS-3618 CL 6.2.1(B))
- Paint thickness, Adhesion & Shade
- Make of component fitted on panel as per approved Drg.
- Electrical Test

→ Shipment

MARSHALLING BOX

- Electrical Test
- Paint thickness, Adhesion & Shade
- Make of component as per approved Drg.

→ I

Megha Engineering & Infrastructures Ltd.

सुरेश कुमार गुप्ता / S. K. GUPTA
उप महाप्रबंधक / Dy. General Manager
गुणता आश्वासन-टी.सी.बी. / Quality Assurance-TCB
बी.एच.ई.एल., भोपाल / B.H.E.L., BHOPAL

MANUFACTURING QUALITY PLAN

BHARAT HEAVY ELECTRICALS LTD. BHOPAL	Item	MQP No.:	Rev. No.	Rev. Date	BHEL W. O. No.: 62007, 62009, 62010, 62011, 62014 & 62015-A-512-01	Page
Customer : M/s Megha Engg. Infra Ltd.	Auto Transformer (Up to 765 KV)	QA/TCB/31/744	03	25.08.2015		6

Sl. No.	Components/ Operation & Description or Test	Type of check	Quantum of check/ Sampling with basis	Reference Document for Testing	Acceptance Norms	Format of Records	Applicable Codes 1	2	3	4	5	6	Remarks
SECTION - A : RAW MATERIAL INSPECTION													
1.1	PAPER COVERED COPPER CONDUCTOR (PICC)										E		
1.1.1	Visual and Dimensional check- Thickness, width of bare conductor, corner radius, visual check for surface finish, number of layers of paper covering, arrangement of layers, increase in dimensions due to paper covering & covered thickness.	Visual & Measurement	IS 2500 Pt. 1 AQL=4% Inspection level 1 Lot Size / Sample Size 2 to 90 / 3 91 to 280 / 13 281 - above - / 20	BHEL Specification AA 28125 AA 28128 BHEL P.O.	CMTC		B	K	U/Q	W/Z	-	N	CIP for first transformer each type, size & vendor as per contract & review for remaining Transformers.
1.1.2	CHECK FOR :- Resistivity at 20^0 C Elongation (for Annealed conductor) Proof stress (for proof stress conductor) Insulation test for bunched conductor	 Test Mechanical Test	IS 2500 Pt. 1 AQL=4% Inspection level 1 Lot Size / Sample Size 2 to 50 / 1 51 to 280 / 3 281 above 5 [Mfr. Shall conduct insulation test on 100% & proof stress (for proof stress conductors) on each mother reel]	BHEL Specn. AA 28125 AA 28128 BHEL P.O.	CMTC		B	K	U/Q	W/Z	-	N	--do- --do- --do- --do- --do-
1.2	EPOXY BONDED BUNCHED PICC (GLUED PICC-GPICC)										E		
1.2.1	Check for proper storage of epoxy bonded bunched PICC in refrigerated container as per recommendation of supplier & Manufacturer	Visual	100%	BHEL Std. TR 10133I, shall be complied	CMTC/		B	K	U/Q	W/Z	-	N	CIP for first transformer each type, size & vendor as per contract & review for remaining

Megha Engineering & Infrastructures Ltd.

सुरेश कुमार गुप्ता / S. K. GUPTA

MANUFACTURING QUALITY PLAN

BHARAT HEAVY ELECTRICALS LTD. BHOPAL	Item	MQP No.:	Rev. No.	Rev. Date	BHEL W. O. No.: 62007, 62009, 62010, 62011, 62014 & 62015-A-512-01	Page
Customer : M/s Megha Engg. Infra Ltd.	Auto Transformer (Up to 765 KV)	QA/TCB/31/744	~~02~~ 03	25.08.2015		7

Sl. No.	Components/ Operation & Description or Test	Type of check	Quantum of check/ Sampling with basis	Reference Document for Testing	Acceptance Norms	Format of Records	Applicable Codes 1	2	3	4	5	6	Remarks
	--Contd--												Transformers. Record review of documents pertaining to NOMEX strips at manufacturer's works (If indigenous) or record review of transportation/ storage as per Mfr's guideline (if imported)
1.2.2	VISUAL AND DIMENSIONAL CHECKS												
	Thickness, width of bare conductor, corner radius, finish, number of layers of paper covering , arrangement of layers, increase in dimensions due to paper covering, enamel covered thickness, thickness of epoxy bonded strip.	Visual & Measurement	IS 2500 Pt. 1 AQL=4% Inspection level 1 Lot Size — Sample Size 2 to 90 — 3 91 to 280 — 13 281 above 20	BHEL Specn. AA 28125 AA 28128 TRE 078/TRE 151 BHEL P.O.	CMTC		B	K	U/Q	W/Z	-	N	CIP for first transformer each type, size & vendor as per contract & review for remaining Transformers.
1.2.3	CHECK FOR :-		IS 2500 Pt. 1 AQL=4% Inspection level 1	BHEL Specn. AA 28125	CMTC		B	K	U/Q	W/Z	-	N	--do-
a)	Resistivity at 20^0 C	Electrical Test	Lot Size — Sample Size	AA 28128 TRE 078/TRE 151			B	K	U/Q	W/Z	-	N	--do-
b)	Elongation (for Annealed conductor)	Test	2 to 50 — 1 51 to 280 — 3 281 above 5	BHEL P.O.			B	K	U/Q	W/Z	-	N	--do-
c)	Proof stress (for proof stress conductor)	Test	[Mfr. Shall conduct insulation test on 100% & proof stress				B	K	U/Q	W/Z	-	N	--do-

सुरेश कुमार गुप्ता / S. K. GUPTA
उप महाप्रबंधक / Dy. General Manager
गुणवत्ता आश्वासन टीसीबी / Quality Assurance-TCB

Megha Engineering & Infrastructures Ltd.

MANUFACTURING QUALITY PLAN

BHARAT HEAVY ELECTRICALS LTD. BHOPAL	Item	MQP No.:	Rev. No.	Rev. Date	BHEL W. O. No.: 62007, 62009, 62010, 62011, 62014 & 62015-A-512-01	Page
Customer : M/s Megha Engg. Infra Ltd.	Auto Transformer (Up to 765 KV)	QA/TCB/31/744	~~02~~ 03	25.08.2015		8

Sl. No.	Components/ Operation & Description or Test	Type of check	Quantum of check/ Sampling with basis	Reference Document for Testing	Acceptance Norms	Format of Records	Applicable Codes 1	2	3	4	5	6	Remarks
d)	Insulation test for bunched conductor at 250 V for 1 min	Test	(for proof stress conductors) on each mother reel]				B	K	U/Q	W/Z	-	N	--do-
e)	Check for Flexibility adherence of enamel covering, breakdown voltage test on enameled conductor & buckling Load Test.	Test					B	K	U/Q	W/Z	-	N	--do-
f)	Check for Nomex Paper	Visual					B	K	P	W/Z	-	N	Record Review
g)	Buckling load test for epoxy strip bounded conductor sample	Test					B	K	U/Q	W/Z	-	Y	CIP
1.3	PAPER COVERED COPPER CONTINUOUSLY TRANSPOSED COPPER CABLE (CTC) & EPOXY BONDED CTC										E		
1.3.1	Visual and Dimensional check- Thickness, width of bare and enameled conductor, increase in dimensions due to enamel and due to paper covering, covered axial width and radial depth, arrangement of paper layers, proper storage and shelf life check for epoxy bonded CTC	Visual & Measurement	One sample per size per lot	BHEL Specification AA 28127 AA 28129 & TRE 036 BHEL P.O.	CMTC		B	K	U/Q	W/Z	-	N	CIP for first transformer each type, size & vendor as per contract & review for remaining Transformers and Record review for Off-shore materials

Megha Engineering & Infrastructures Ltd.

सुरेश कुमार गुप्ता / S. K. GUPTA
उप महाप्रबंधक / Dy. General Manager
गुणता आश्वासन-टी.सी.बी. / Quality Assurance-TCB
बी.एच.ई.एल., भोपाल / B.H.E.L., BHOPAL

MANUFACTURING QUALITY PLAN

BHARAT HEAVY ELECTRICALS LTD. BHOPAL	Item	MQP No.:	Rev. No.	Rev. Date	BHEL W. O. No.: 62007, 62009, 62010, 62011, 62014 & 62015-A-512-01	Page
Customer : M/s Megha Engg. Infra Ltd.	Auto Transformer (Up to 765 KV)	QA/TCB/31/744	~~02~~ 03	25.08.2015		9

Sl. No.	Components/ Operation & Description or Test	Type of check	Quantum of check/ Sampling with basis	Reference Document for Testing	Acceptance Norms	Format of Records	Applicable Codes 1	2	3	4	5	6	Remarks
1.3.2	CHECK FOR :-				CMTC		B	K	U/Q	W/Z	-	N	CIP for first transformer each type, size & vendor as per contract & review for remaining Transformers and Record review for Off-shore materials
a)	Resistivity at 20^{0} C	Test	One sample per size per lot	BHEL Specification AA 28127									
b)	Elongation (for Annealed conductor)			AA 28129 & TRE 036 BHEL P.O.									
c)	Proof stress (for proof stress conductor)												
d)	Check for Flexibility adherence of enamel covering, breakdown voltage test on enameled conductor &												
e)	Manual Operation of conductor for cured sample (Check for proper bonding of glue with conductor)												
f)	Insulation test on finished cable between enameled strips & between two stacks in case of bunched CTC			Shall withstand 250 V for 1 min. 1 Amp max changing current.									

Megha Engineering & Infrastructure Ltd.

सुरेश कुमार गुप्ता / S. K. GUPTA
उप महाप्रबंधक / Dy. General Manager
गुणता आश्वासन-टी.सी.बी. / Quality Assurance-TCB
बी.एच.ई.एल. भोपाल / B.H.E.L., BHOPAL

MANUFACTURING QUALITY PLAN

BHARAT HEAVY ELECTRICALS LTD. BHOPAL	Item	MQP No.:	Rev. No.	Rev. Date	BHEL W. O. No.: 62007, 62009, 62010, 62011, 62014 & 62015-A-512-01	Page
Customer : M/s Megha Engg. Infra Ltd.	Auto Transformer (Up to 765 KV)	QA/TCB/31/744	~~02~~ 03	25.08.2015		10

Sl. No.	Components/ Operation & Description or Test	Type of check	Quantum of check/ Sampling with basis	Reference Document for Testing	Acceptance Norms	Format of Records	Applicable Codes 1	2	3	4	5	6	Remarks
1.4	KRAFT INSULATING PAPER (USED FOR COVERING PICC & CTC										E		
1.4.1	Visual check, & Measurement of Thickness	Visual & Measurement	One sample per thickness per lot	BHEL Specn. AA 21111 AA 21116 BHEL P.O.	CMTC		B	K	P	W/Z	-	Y	Record Review
	CHECK FOR :- Substance Density Moisture content / Water absorption Air Permeability Tensile index Tear index Electric strength in air Ash Content Conductivity pH value Heat stability (Type Test)	Test	One sample per thickness per lot	BHEL Specn. AA 21111 AA 21116 BHEL P.O.	CMTC		B	K	P	W/Z	-	N	Record Review
1.5	CRGO STEEL .										E		
1.5.1	Visual and Dimension check, Thickness, roll width, edge camber and waviness	Visual & Dimension	One sample per lot	BHEL Specn.AA 10905/ BP 10987 /BP 10988 / BP 10985 & BP 10984	CMTC EMTC		B A	K J	P U	W/Z W/Z	- -	N Y	CIP
1.5.2	CHECK FOR :- Specific total loss Ductility Stacking factor Surface insulation resistivity Magnetic permeability (Alternatively induction at 800 A / m) Ageing test (Type test)	Test	One sample per lot	--do--	CMTC EMTC		B A	K J	P U	W/Z W/Z	- -	Y Y	CIP

Megha Engineering & Infrastructures Ltd.

सुरेश कुमार गुप्ता / S. K. GUPTA
उप महाप्रबंधक / Dy. General Manager
गुणवत्ता आश्वासन / Quality Assurance : TCB

MANUFACTURING QUALITY PLAN

BHARAT HEAVY ELECTRICALS LTD. BHOPAL	Item	MQP No.:	Rev. No.	Rev. Date	BHEL W. O. No.: 62007, 62009, 62010, 62011, 62014 & 62015-A-512-01	Page
Customer : M/s Megha Engg. Infra Ltd.	Auto Transformer (Up to 765 KV)	QA/TCB/31/744	~~02~~ 03	25.08.2015		11

Sl. No.	Components/ Operation & Description or Test	Type of check	Quantum of check/ Sampling with basis	Reference Document for Testing	Acceptance Norms	Format of Records	Applicable Codes 1	2	3	4	5	6	Remarks
1.6	PRECOMPRESSED PRESSBOARD										E		
1.6.1	Visual & dimension check- Thickness, width & length, edge camber, difference in two diagonals of sheet.	Visual & Measure-ment	IS 2500 Pt. 1 AQL=4% Inspection level 1 Lot Size — Sample Size 2 to 90 — 3 91 to 280 — 13	BHEL Specn. AA 21108 / TRE 184 or AA 21109 / TRE 185	CMTC		B	K	P	W/Z	-	N	Record review
1.6.2	CHECK FOR :- Density Oil absorption Moisture content Shrinkage in air Cohesion between plies Tensile strength Elongation Compressibility in air Electric strength Ash content pH value Conductivity	Test	One sample per thickness per lot	BHEL Specn. AA 21108 / TRE 184 or AA 21109 / TRE 185	CMTC		B	K	P	W/Z	-	N	Record review
1.7	UNIMPREGNATED DENSIFIED LAMINATED WOOD										E		
1.7.1	Visual & dimension check - thickness width & length	Visual & Measurement	IS 2500 Pt. 1 AQL=4% Inspection level 1 Lot Size — Sample Size 2 to 90 — 3 91 to 280 — 13 281 to 500 — 20	BHEL Specn. AA 22001 / IEC 61061 AA 22002	CMTC		B	K	P	W/Z	-	N	Record review

Megha Engineering & Infrastructures Ltd.

सुरेश कुमार गुप्ता / S. K. GUPTA
उप महाप्रबंधक / Dy. General Manager
गुणता आश्वासन-टी.सी.बी. / Quality Assurance-TCB
भा.हे.वि.लि., भोपाल / BHEL, BHOPAL

MANUFACTURING QUALITY PLAN

बीएचईएल BHEL	BHARAT HEAVY ELECTRICALS LTD. BHOPAL		Item	MQP No.:	Rev. No.	Rev. Date	BHEL W. O. No.: 62007,						Page
	Customer : M/s Megha Engg. Infra Ltd.		Auto Transformer (Up to 765 KV)	QA/TCB/31/744	~~02~~ 03	25.08.2015	62009, 62010, 62011, 62014 & 62015-A-512-01						12
Sl. No.	Components/ Operation & Description or Test	Type of check	Quantum of check/ Sampling with basis	Reference Document for Testing	Acceptance Norms	Format of Records	Applicable Codes						Remarks
							1	2	3	4	5	6	
1.7.2	CHECKS FOR :-	Tests	One sample per thickness per lot	--do--		CMTC	B	K	P	W/Z	-	N	Record review
	Density												
	Moisture & Volatile content												
	Oil absorption												
	Electric Strength (Proof) on oil at 90° C												
	a) Along the grain												
	b) Edgewise												
	Tensile strength												
	Cross breaking strength												
	a) Along the grain												
	b) Across the grain												
	Compressive strenth												
1.8	RESIN GLASS TAPE										E		
1.8.1	Visual & dimension check- thickness width	Visual Measurement	IS 2500 Pt. 1 AQL=4% Inspection level 1 Lot Size — Sample Size 2 to 90 — 3 91 to 280 — 13 281 to 500 — 20	BHEL Specn. AA 25716		CMTC	B	K	P	W/Z	-	N	Record review
1.8.2	CHECK FOR :-	Test	One sample per thickness per lot	BHEL Specn. AA 25716		CMTTC	B	K	P	W/Z	-	N	Record review
	Shelf life												
	Resin content												
	Sealing (solder) test												
	Warp Yarns												
	Softening point of Resin												
	Breaking load per turn of cured tape												

Megha Engineering & Infrastructures Ltd.

सुरेश कुमार गुप्ता / S. K. GUPTA
उप महाप्रबंधक / Dy. General Manager
गुणता आश्वासन-टी.सी.बी. / Quality Assurance-TCB
BHOPAL

MANUFACTURING QUALITY PLAN

BHARAT HEAVY ELECTRICALS LTD. BHOPAL	Item	MQP No.:	Rev. No.	Rev. Date	BHEL W. O. No.: 62007,	Page
Customer : M/s Megha Engg. Infra Ltd.	Auto Transformer (Up to 765 KV)	QA/TCB/31/744	~~02~~ 03	25.08.2015	62009, 62010, 62011, 62014 & 62015-A-512-01	13

Sl. No.	Components/ Operation & Description or Test	Type of check	Quantum of check/ Sampling with basis	Reference Document for Testing	Acceptance Norms	Format of Records	Applicable Codes 1	2	3	4	5	6	Remarks
1.9	SYNTHETIC RUBBER BONDED CORK SHEET										E		
1.9.1	Visual check, thickness length, width	Visual & Measurement	IS 2500 Pt. 1 AQL=4% Inspection level 1 Lot Size / Sample Size 2 to 90 / 3 91 to 280 / 13	BHEL Specn. AA 59802	CMTC	B	K	P	W/Z	-	N	Record review
1.9.2	CHECK FOR :- Hardness Compression set Tensile strength Flexibility Compressibility Recovery Side flow under compression Ageing in oil - finish, Flexibility and change in volume pH value Density	Tests	One sample per lot per thickness	BHEL Specn. AA 59802	CMTC	B	K	P	W/Z	-	N	Record review
1.10	NITRILE RUBBER CORD AND 'O' RING										E		
1.10.1	Visual check, diameter & dimensions	Visual & Measurement	IS 2500 Pt. 1 AQL=4% Inspection level 1 Lot Size / Sample Size 2 to 90 / 3 91 to 280 / 13	BHEL Specn. AA 59807&BHEL Drg	CMTC	B	K	P	W	-	N	Record review

Megha Engineering & Infrastructures Ltd.

सुरेश कुमार गुप्ता / S.K. GUPTA
उप महाप्रबंधक / Dy. General Manager
Inv Assurance TCB

MANUFACTURING QUALITY PLAN

BHARAT HEAVY ELECTRICALS LTD. BHOPAL	Item	MQP No.:	Rev. No.	Rev. Date	BHEL W. O. No.: 62007, 62009, 62010, 62011, 62014 & 62015-A-512-01	Page
Customer : M/s Megha Engg. Infra Ltd.	Auto Transformer (Up to 765 KV)	QA/TCB/31/744	~~02~~ 03	25.08.2015		14

Sl. No.	Components/ Operation & Description or Test	Type of check	Quantum of check/ Sampling with basis	Reference Document for Testing	Acceptance Norms	Format of Records	Applicable Codes 1	2	3	4	5	6	Remarks
1.10.2	**CHECK FOR :-**	Test	One sample per lot per thickness	BHEL Specn. AA 59807 & BHEL Drg.		CMTC	B	K	P	W/Z	-	N	Record review
	Hardness												
	Tensile strength												
	Elongation at break												
	Compression set												
	Accelerated ageing % Ageing in oil												
	Type test - (Volume change. Adhesion to and corrosion of metals.)	Test				CMTC	B	K	P	W/Z	-	N	Record review
	Sulphur Content test			0.2 % Max*									
1.11	**BUSHING**										E		
1.11.1	**Bushing core Insulation - Visual Check**	Visual	100%	BHEL Drg.		EMTC	B	K	S	W/Z	-	N	
1.11.2a	**Condenser Bushing Oil** (Filled with mineral insulating oil to IEC 60296 & MEIL Spec)		100%	BHEL Specn.		CMTC	B	K	S	W/Z	-	Y	Record review/CIP
1.11.2b	**CONDENSER BUSHING**										E		
1.11.2.1	Visual Check, fitting of all acessories, lead length & type	Visual	100%	BHEL Drg./ IS 2099/ IEC 137		EMTC	A/B	J/K	S/U	W/Z	-	N/Y	CIP for bushings fitted to transformer and also spare bushings if supplied.
1.11.2.2	Pressure test	Mechanical test	100%	IS 2099/IEC 137		EMTC/	A/B	J/K	S/U	W/Z	-	Y	
1.11.2.3	Routine test at ambient temp. - measurement of tan delta & capacitance. Dry. P.f. voltage with stand test, measurement of p.d. quantity, five negative lightning impuls voltage with stand test, test on test tap, leakage of internal filling as specified in IEC 137.	Electrical / Mechanical test	100%	IS 2099/IEC 137		EMTC	A/B	J/K	S/U	W/Z	-	Y	

* = Certification by Vendor as per IS 4253 (Part 3) for the Lot supplied.

Megha Engineering & Infrastructures Ltd.

सुरेश कुमार गुप्ता / S. K. GUPTA
उप महाप्रबंधक / Dy. General Manager
गुणवत्ता आश्वासन / TCB

MANUFACTURING QUALITY PLAN

BHARAT HEAVY ELECTRICALS LTD. BHOPAL	Item	MQP No.:	Rev. No.	Rev. Date	BHEL W. O. No.: 62007, 62009, 62010, 62011, 62014 & 62015-A-512-01	Page
Customer : M/s Megha Engg. Infra Ltd.	Auto Transformer (Up to 765 KV)	QA/TCB/31/744	~~02~~ 03	25.08.2015		15

Sl. No.	Components/ Operation & Description or Test	Type of check	Quantum of check/ Sampling with basis	Reference Document for Testing	Acceptance Norms	Format of Records	Applicable Codes 1	2	3	4	5	6	Remarks
1.11.2.4	Type test (All type test as per the contract in question need to be conducted/approval from MEIL Engg. To be obtained)	Electrical test	all type test on one Unit of same rating bushing.	IS 2099/ IEC		CMTC/EMTC	B/A	K/J	U	W/Z	-	Y	CIP (Valid type test report to be submitted for MEIL approval if not approved then Type test to be conducted)
1.11.3	PORCELAIN BUSHING										E		
1.11.3.1	Visual check, & dimensional check	Visual & Measurement	100%	IS 3347, IS 2099 & BHEL Drawing		CMTC	B	K	P	W/Z	-	N	Record Review
1.11.3.2	Porosity, High voltage & Insulation resistance, element test, gas volume test, Loss of oil and surge test.	Electrical Test	100%	IS 3347, IS 2099 & BHEL Std. TR 20053		CMTC	B	K	P	W/Z	-	N/Z	Record Review
1.11.3.3	Type test-Mechanical strength & velocity calibration	Mechanical test	One Unit			CMTC	B	K	U	W/Z	-	Y	CIP (Valid type test report to be submitted for MEIL approval if not approved then Type test to be conducted)
1.12	CURRENT TRANSFORMER										N		
1.12.1	Visual check, check for dimensions (ID, OD, thickness) & completeness	Visual & Measurement	100% (10% dimension check)	IS 2705		EMTC	A	J	S	W/Z	-	N	Record Review
1.12.2	Accuracy, Ratio, Power frequency dry withstand test on secondary, over voltage interturn, verification of terminal marking & polarity, knee point voltage & exciting current test for P.S. class CT. secondary wdg. Resistance for PS class CT.	Electrical Test	100%	IS 2705		EMTC	A	J	S	W/Z	-	N	Record Review

Megha Engineering & Infrastructures Ltd.

सुरेश कुमार गुप्ता
S. K. GUPTA
General Manager
Quality Assurance TCB
BHEL

MANUFACTURING QUALITY PLAN

BHARAT HEAVY ELECTRICALS LTD. BHOPAL	Item	MQP No.:	Rev. No.	Rev. Date	BHEL W. O. No.: 62007,	Page
Customer : M/s Megha Engg. Infra Ltd.	Auto Transformer (Up to 765 KV)	QA/TCB/31/744	~~02~~ 03	25.08.2015	62009, 62010, 62011, 62014 & 62015-A-512-01	16

Sl. No.	Components/ Operation & Description or Test	Type of check	Quantum of check/ Sampling with basis	Reference Document for Testing	Acceptance Norms	Format of Records	Applicable Codes 1	2	3	4	5	6	Remarks
1.12.3	SECONDARY TERMINAL BOARD										E		
1.12.3.1	Visual & Dimensional check	Visual & Measurement	100% by mfr., IS 2500 Part-1, AQL=4% Inspection level 1 Lot Size / Sample Size 2 to 90 / 3 91 to 280 / 13	BHEL drg.	CMTC		B	K	P	W/Z	-	N	Record Review
1.12.3.2	Electrical voltage withstand i) between terminals ii) between terminal & mounting holes.	Electrical test	100%	BHEL drg.	CMTC		B	K	P	W/Z	-	N	Record Review
1.12.3.3	Oil Pressure Test	Mechanical test	10%	BHEL drg.	CMTC		B	K	P	W/Z	-	N	Record Review
1.13	BUCHHOLZ RELAY										E		
1.13.1	Visual & Dimensional check	Visual & Measurement	IS 2500 Pt. 1 AQL=4% Inspection level 1 Lot Size / Sample Size 2 to 90 / 3 91 to 280 / 13	BHEL Std. TR 20053 B & IS 3637	CMTC		B	K	P	W/Z	-	N	Record Review
1.13.2	Porosity, high voltage & insulation resistance, element test, gas volume test, Loss of oil & surge test.	Electrical test	100%	BHEL Std. TR 20053 B & IS 3637	CMTC		B	K	P	W/Z	-	N	Record Review
1.13.3	Type test- Mechanical strength & velocity calibration	Mechanical Test	One Unit	--do--	CMTC		B	K	U	W/Z	-	Y	CIP (Valid type test report to be submitted for MEIL approval if not approved then Type test to be conducted)

Megha Engineering & Infrastructures Ltd.

सुरेश कुमार गुप्ता / S. K. GUPTA
उप महाप्रबंधक / Dy. General Manager
गुणता आश्वासन-टी.सी.बी. / Quality Assurance-TCB
भोपाल / BHOPAL

MANUFACTURING QUALITY PLAN

BHARAT HEAVY ELECTRICALS LTD. BHOPAL	Item	MQP No.:	Rev. No.	Rev. Date	BHEL W. O. No.: 62007, 62009, 62010, 62011, 62014 & 62015-A-512-01	Page
Customer : M/s Megha Engg. Infra Ltd.	Auto Transformer (Up to 765 KV)	QA/TCB/31/744	~~02~~ 03	25.08.2015		17

Sl. No.	Components/ Operation & Description or Test	Type of check	Quantum of check/ Sampling with basis	Reference Document for Testing	Acceptance Norms	Format of Records	Applicable Codes 1	2	3	4	5	6	Remarks
1.14	**TERMINAL CONNECTOR**										E		
1.14.1	Visual & Dimensional check	Visual & Measurement	IS 2500 Pt. 1 AQL=4% Inspection level 1 Lot Size — Sample Size 2 to 90 — 3 91 to 280 — 13 (100% check by mfr.)	TR 10077 T& IS 5561	CMTC		B	K	Q	W/Z	-	N	Record Review
1.14.2	Acceptance test - tensile, resistance, galvanizing where applicable.	Mechanical test	IS : 5561	TR 10077 T & IS 5561	CMTC		B	K	Q	W/Z	-	N	Record Review
1.14.3	Type test	Electrical test	One One unit	--do--	CMTC		B	K	U	W/Z	-	Y	CIP (Valid type test report to be submitted for MEIL approval if not approved then Type test to be conducted)
1.15	**MARSHALLING BOX (CONTROL CABINET) (Surface cleaning before painting by 7 tank hot process)**										E		
1.15.1	Visual check, (including workmanship of internal arrangements, ferruling, labeling, access etc.) dimension, paint thickness, adhesion test paint shade etc.	Visual & Measurement	100%	POWERGRID apprd. Drg. BHEL Std. TR 10079I, TR 10080L, TR 10005 P IS 732, IS 2147	CMTC		B/A	K/J	Q/U	W/Z	-	Y	CIP

Megha Engineering & Infrastructures Ltd.

सुरेश कुमार गुप्ता / S.K. GUPTA
उप महाप्रबंधक / Dy. General Manager
गुणता आश्वासन-टी.सी.बी. / Quality Assurance-TCB
भोपाल / BHOPAL

MANUFACTURING QUALITY PLAN

BHARAT HEAVY ELECTRICALS LTD. BHOPAL	Item	MQP No.:	Rev. No.	Rev. Date	BHEL W. O. No.: 62007, 62009, 62010, 62011, 62014 & 62015-A-512-01	Page
Customer : M/s Megha Engg. Infra Ltd.	Auto Transformer (Up to 765 KV)	QA/TCB/31/744	~~02~~ 03	25.08.2015		18

Sl. No.	Components/ Operation & Description or Test	Type of check	Quantum of check/ Sampling with basis	Reference Document for Testing	Acceptance Norms	Format of Records	Applicable Codes 1	2	3	4	5	6	Remarks
1.15.2	Routine tests - HV test at 2 KV for 1 minute between all live terminal to earth, insulation resistance at 500 V, Verification of wiring and its routing, functional test-at min. rated & maximum operating voltage as per BHEL appd drg., electrical control operations, interlock & sequential operations, Mechanical test manual operation of euipments, switches and contactors & check for & type of instruments / components	Electrical / Mechanical / Visual Test	100%	BHEL Std. TR 10079I-TR 10080L-TR 10005 P IS 732, IS 2147		CMTC	B/A	K/J	Q/U	W/Z	-	Y	CIP
1.15.3	Type test (Type tests required as per the contract in question need to be conducted / approval from MEIL Engg. to be obtained)	test				CMTC	B/A	K/J	Q/U	W/Z	-	Y	CIP (Valid type test report to be submitted for MEIL approval if not approved then Type test to be conducted)
1.16	**AIR CELL (FLEXIBLE SEPARATOR)**										E		
1.16.1	Routine tests on basic fabric, oil side coating compound, air side under coating compound, air side outer coating compound & coated fabric	Mechanical / Electrical / Chemical	One sample per lot of raw matl. / processed compound	BHEL Std. TR 10150 A TR 20038 A, BHEL PO.		CMTC	B	K	P	W/Z	-	N	Record Review
1.16.2	Surface finish of completed air cell & dimension check	Visual Measurement	100%	BHEL Std. TR 10150 A TR 20038 A, BHEL PO.		CMTC	B	K	P	W/Z	-	N	Record Review

Megha Engineering & Infrastructures Ltd.

सुरेश कुमार गुप्ता / S K GUPTA

MANUFACTURING QUALITY PLAN

BHARAT HEAVY ELECTRICALS LTD. BHOPAL	Item	MQP No.:	Rev. No.	Rev. Date	BHEL W. O. No.: 62007,	Page
Customer : M/s Megha Engg. Infra Ltd.	Auto Transformer (Up to 765 KV)	QA/TCB/31/744	~~02~~ 03	25.08.2015	62009, 62010, 62011, 62014 & 62015-A-512-01	19

Sl. No.	Components/ Operation & Description or Test	Type of check	Quantum of check/ Sampling with basis	Reference Document for Testing	Acceptance Norms	Format of Records	Applicable Codes 1	2	3	4	5	6	Remarks
1.16.3	Routine test - Ten times inflation & deflation at 10 KPa & pressure test at 10 KPa for 24 hrs.	Mechanical Test	100%	BHEL Std. TR 10150 A TR 20038 A, BHEL PO		CMTC	B	K	P	W/Z	-	N	Record Review
1.16.4	Type test -oil side coating air side under coating, air side outer coating & coated fabric.	Test		BHEL Spec.		CMTC	B	K	U	W/Z	-	Y	CIP (Valid type test report to be submitted for MEIL approval if not approved then Type test to be conducted)
1.17	**ROLLER ASSEMBLY**										E		
1.17.1	Visual & Dimensional check Paint check	Visual & Dimensional	IS 2500 Pt. 1 AQL=4% Inspection level 1 Lot Size / Sample Size 2 to 90 / 3 91 to 280 / 13	BHEL drg. / BHEL Specn. TR 20005R		CMTC	B	K	P	W/Z	-	N	Record Review
1.17.2	Mechanical properties and chemical composion of raw material used for shaft and roller forging.	Mechanical & Chemical	One sample per matl. / heat treatment batch	BHEL drg. / BHEL Specn. AA 10150 AA 10108 & AA 19331		CMTC	B	K	P	W/Z	-	N	Record Review
1.18	**OIL & WINDING TEMP. INDICATOR (LOCAL & REMOTE)**										E		
1.18.1	Visual check & Dimensional check	Visual & Measurement	IS 2500 Pt. 1 AQL=4% Inspection level 1 Lot Size / Sample Size 2 to 90 / 3	BHEL drg. BHEL Specn. TR 20093T TR 20101T & TR 10123T		CMTC	B	K	P	W/Z	-	N	Record Review
1.18.2	Calibration & 2 KV, HV test for 1 minute between all terminals & earth.	Electrical	100%	--do--		CMTC	B	K	P	W/Z	-	N	Record Review

Megha Engineering & Infrastructures Ltd.

सुरेश कुमार गुप्ता S. K. GUPTA

MANUFACTURING QUALITY PLAN

BHARAT HEAVY ELECTRICALS LTD. BHOPAL	Item	MQP No.:	Rev. No.	Rev. Date	BHEL W. O. No.: 62007,	Page
Customer : M/s Megha Engg. Infra Ltd.	Auto Transformer (Up to 765 KV)	QA/TCB/31/744	~~02~~ 03	25.08.2015	62009, 62010, 62011, 62014 & 62015-A-512-01	20

Sl. No.	Components/ Operation & Description or Test	Type of check	Quantum of check/ Sampling with basis	Reference Document for Testing	Acceptance Norms	Format of Records	Applicable Codes 1	2	3	4	5	6	Remarks
1.18.3	Type tests - Switch setting & operations, switch differential & switch rating	Test	One Instrument per lot	--do--		CMTC	B	K	P	W/Z	-	N	Record Review
1.19	**RTD TYPE REMOTE AND WINDING TEMP. INDICATOR**										E		
1.19.1	Visual & Dimensional check	Visual & Measure -ment	IS 2500 Pt. 1 AQL=4% Inspection level 1 Lot Size 2 to 90 — Sample Size 3	BHEL Std. TR 20094T TR 20095T TR 20096T TR 20097T & TR 10157 /		CMTC	B	K	P	W/Z	-	N	Record Review
1.19.2	Calibration, HV Test (500 V/ 2000 V for 1 minute) Insulation resistance by 500 V meggar & sensor resistance.	Electrical	100%	BHEL Std. TR 20094T TR 20095T TR 20096T TR 20097T & TR 10157 /		CMTC	B	K	P	W/Z	-	N	Record Review
1.20	**PRESSURE RELIEF VALVE**										E		
1.20.1	Visual & Dimensional check	Visual & Measurement	IS 2500 Pt. 1 AQL=4% Inspection level 1 Lot Size 2 to 90 — Sample Size 3	BHEL Std. TR 20001V		CMTC	B	K	P	W/Z	-	N	Record Review
1.20.2	Pressure operation test (Pressure relief device test)	Mechanical	100%	BHEL Std. TR 20001V		CMTC	B	K	P	W/Z	-	N	Record Review
1.20.3	A) Leakage test at 75% of operating pressuer for 1 hr.	Mechanical	100%	--do--		CMTC	B	K	P	W/Z	-	N	
	B) 2 KV for 1 min. between terminal and earth.	Electrical Test	100%	--do--		CMTC	B	K	P	W/Z	-	N	

Megha Engineering & Infrastructures Ltd.

राकेश कुमार गुप्ता S. K. GUPTA

MANUFACTURING QUALITY PLAN

BHARAT HEAVY ELECTRICALS LTD. BHOPAL	Item	MQP No.:	Rev. No.	Rev. Date	BHEL W. O. No.: 62007, 62009, 62010, 62011, 62014 & 62015-A-512-01	Page
Customer : M/s Megha Engg. Infra Ltd.	Auto Transformer (Up to 765 KV)	QA/TCB/31/744	~~02~~ 03	25.08.2015		21

Sl. No.	Components/ Operation & Description or Test	Type of check	Quantum of check/ Sampling with basis	Reference Document for Testing	Acceptance Norms	Format of Records	Applicable Codes 1	2	3	4	5	6	Remarks
1.20.4	Liquid pressure test	Test	100%	--do--		CMTC	B	K	P	W/Z	-	N	
1.20.5	Contact Test	Test	100%	--do--		CMTC	B	K	P	W/Z	-	N	
1.20.6	Type test	Test				CMTC	B	K	U	W/Z	-	Y	CIP (Valid type test report to be submitted for MEIL approval if not approved then Type test to be conducted)
1.21	MEGNETIC OIL GAUGE										E		
1.21.1	Visual & Dimensional Check	Visual Measurement	IS 2500 Pt. 1 AQL=4% Inspection level 1 Lot Size 2 to 90 — Sample Size 3	BHEL Std. TR 20041O & TR 20084O		CMTC	B	K	P	W/Z	-	N	Record Review
1.21.1.2	Calibration check for 1/4 35°C 3/4 & full level on guage, switch operation & 2 KV test for 1 min. between terminals to earth Switch Operation Test & Isolation Test	Mechanical Electrical Test	100%	--do--		CMTC	B	K	P	W/Z	-	N	Record Review
1.22	GAS COLLECTING DEVICE										E		
1.22.1	Visual & Dimensional Check	Visual Measurement	IS 2500 Pt. 1 AQL=4% Inspection level 1 Lot Size 2 to 90 — Sample Size 3	BHEL drg.		CMTC	B	K	P	W/Z	-	N	Record Review
1.22.2	Pressure Test	Mechanical Test	100%	BHEL drg.		CMTC	B	K	P	W/Z	-	N	Record Review

Megha Engineering & Infrastructures Ltd.

सुरेश कुमार गुप्ता S. K. GUPTA

MANUFACTURING QUALITY PLAN

BHARAT HEAVY ELECTRICALS LTD. BHOPAL	Item	MQP No.:	Rev. No.	Rev. Date	BHEL W. O. No.: 62007, 62009, 62010, 62011, 62014 & 62015-A-512-01	Page
Customer : M/s Megha Engg. Infra Ltd.	Auto Transformer (Up to 765 KV)	QA/TCB/31/744	~~02~~ 03	25.08.2015		22

Sl. No.	Components/ Operation & Description or Test	Type of check	Quantum of check/ Sampling with basis	Reference Document for Testing	Acceptance Norms	Format of Records	Applicable Codes 1	2	3	4	5	6	Remarks
1.23	**GATE AND GLOBE VALVE (CAST IRON AND GUN METAL)**										E		
1.23.1	Visual & Dimensional check	Visual Measurement	IS 2500 Pt. 1 AQL=4% Inspection level 1 Lot Size — Sample Size 2 to 90 — 3	BHEL Std. drg. TR 20036 V TR 20037 V	CMTC		B	K	P	W/Z	-	N	Record Review
1.23.2	Check for Raw material for valve body, gate,spindle & gland and pressure test on **i) Gun Metal** a) Body & Seat- 10 kg/cm² b) Seepage 2 kg/cm² for 24 Hrs. **ii) Cast Iron** a) Body 15 kg/cm² b) Seat 10 kg/cm² c) Seepage 2 kg/cm² for 12 hrs.	Mechanical Test	100% (10% for Seepage test	BHEL Std. drg. TR 20036 V TR 20037 V	CMTC		B	K	P	W/Z	-	N	Record Review
1.24	**SILICAGEL BREATHER**										E		
1.24.1	Visual & Dimensional check	Visual Measurement	IS 2500 Pt. 1 AQL=4% Inspection level 1 Lot Size — Sample Size 2 to 90 — 3	BHEL Std. TR 20040 B	CMTC		B	K	P	W/Z	-	N	Record Review
1.24.2	Pressure test by blanking oil cup. end	Mechanical Test	100%	BHEL Std. TR 20040 B	CMTC		B	K	P	W/Z	-	N	Record Review

Megha Engineering & Infrastructures Ltd.

सुरेश कुमार गुप्ता/S. K. GUPTA

MANUFACTURING QUALITY PLAN

BHARAT HEAVY ELECTRICALS LTD. BHOPAL	Item	MQP No.:	Rev. No.	Rev. Date	BHEL W. O. No.: 62007, 62009, 62010, 62011, 62014 & 62015-A-512-01	Page
Customer : M/s Megha Engg. Infra Ltd.	Auto Transformer (Up to 765 KV)	QA/TCB/31/744	02-03	25.08.2015		23

Sl. No.	Components/ Operation & Description or Test	Type of check	Quantum of check/ Sampling with basis	Reference Document for Testing	Acceptance Norms	Format of Records	Applicable Codes 1	2	3	4	5	6	Remarks
1.25	**INSULATION OIL FOR FILLING AT SITE**										E		
1.25.1	INSULATION OIL (To be tested at oil mfr works)	Visual / Electrical/ Chemical	IS: 6855	All tests as per MEIL spec.		CMTC	B	K	U	W/Z		Y	CIP (Oil duly inspected by Customer at oil mfr works)
1.26	**STEEL FABRICATED PARTS**										E		
1.26.1	Steel for tank, cover, conservator, turrets & accessories										-		
	- Visual check for finish & dimensions.	Visual & Measure ment	BHEL Spec. Mentioned if ref. Doc. Column	BHEL Spec./ BHEL Drawing. AA 10108 & AA 10119		CMTC	B	K	Q	W/Z	-	N	Record Review
						EMTC	A	J	S	W/Z	-	N	
	- Chemical composition	Chemical	--do--	--do--		CMTC	B	K	Q	W/Z	-	N	Record Review
						EMTC	A	J	S	W/Z	-	N	
	- Mechanical Properties	Mechanical	--do--	--do--		CMTC	B	K	Q	W/Z	-	N	Record Review
						EMTC	A	J	S	W/Z	-	N	

Megha Engineering & Infrastructures Ltd.

सुरेश कुमार गुप्ता / S. K. GUPTA
उप महाप्रबंधक / Dy. General Manager
गुणता ... Quality Assurance-TCB
बी.एच.ई.एल., भोपाल / B.H.E.L., BHOPAL

MANUFACTURING QUALITY PLAN

BHARAT HEAVY ELECTRICALS LTD. BHOPAL	Item	MQP No.:	Rev. No.	Rev. Date	BHEL W. O. No.: 62007, 62009, 62010, 62011, 62014 & 62015-A-512-01	Page
Customer : M/s Megha Engg. Infra Ltd.	Auto Transformer (Up to 765 KV)	QA/TCB/31/744	~~02~~ 03	25.08.2015		24

Sl. No.	Components/ Operation & Description or Test	Type of check	Quantum of check/ Sampling with basis	Reference Document for Testing	Acceptance Norms	Format of Records	Applicable Codes 1	2	3	4	5	6	Remarks
1.26.2	Cold rolled carbon sheet annealed- drg. for radiator										E		
	- Visual check for finish & dimensions.	Visual & Measurement	BHEL Spec. Mentioned if ref. Doc. Column	BHEL Spec. AA10115		CMTC EMTC	B A	K J	Q S	W/Z W/Z	- -	N N	Record Review
	- Chemical composition	Chemical	--do--	BHEL Spec. AA10115		CMTC EMTC	B A	K J	Q S	W/Z W/Z	- -	N N	Record Review
	- Mechanical Properties	Mechanical	--do--	BHEL Spec. AA10115		CMTC EMTC	B A	K J	Q S	W/Z W/Z	- -	N N	Record Review
1.26.3	Mild steel tube/carbon steel pipe - Electric resistance welded (for pipe work, sub-assy. & for lifting bollard) - Visual check for finish & dimensions. - Chemical composition - Mechanical Properties	Visual / Measurement Chemical Mechanical	IS/BHEL Spec. Mentioned if ref.Doc. column	IS-3589 (Gr.330 for 200/250 NB) / BHEL Spec. AA 10152 up to 150 NB) / BHEL Spec. AA 10108 (MS) / AA 19331 (Forged Bar)		CMTC EMTC	B A	K J	Q S	W/Z W/Z	- -	N N	Record Review
1.26.4	Welding Procedure Spec. (WPS) & welder qualification (for all steel fabricated items indicated at 1.26.1, 1.26.2, & 1.26.3)	Review	100%	ASME Sec. IX and BHEL Aprpoved WPS		Record	B	K	U	W/Z	-	Y	CIP for 10% quantity
1.26.5	Visual check of welding Electrode (for all steel fabricated items indicated at 1.26.1, 1.26.2, & 1.26.3)	Visual & Test	One sample of each type per lot	ASME Sec. IX ASME Sec. II part C and BHEL Appoved WPS		CMTC EMTC	B A	K J	Q S	W/Z W/Z	- -	N N	Record Review

Megha Engineering & Infrastructures Ltd.

सुरेश कुमार गुप्ता S. K. GUPTA
उप महाप्रबंधक / Dy. General Manager
गुणवत्ता आश्वासन-टीसीबी / Quality Assurance-TCB
भोपाल / BHOPAL

MANUFACTURING QUALITY PLAN

	BHARAT HEAVY ELECTRICALS LTD. BHOPAL	Item	MQP No.:	Rev. No.	Rev. Date	BHEL W. O. No.: 62007,	Page
	Customer : M/s Megha Engg. Infra Ltd.	Auto Transformer (Up to 765 KV)	QA/TCB/31/744	~~02~~ 03	25.08.2015	62009, 62010, 62011, 62014 & 62015-A-512-01	25

Sl. No.	Components/ Operation & Description or Test	Type of check	Quantum of check/ Sampling with basis	Reference Document for Testing	Acceptance Norms	Format of Records	Applicable Codes 1	2	3	4	5	6	Remarks
1.26.6	**Tank cover, Top bottom tank, turret, conservator & accessories.**										E		
1.26.6.1	Check for fit up for butt welds on tank walls, base & cover	Visual	100%	BHEL Mfg.drg.		CMTC EMTC	B A	K J	U S	W W	- -	Y Y	CIP for 10% quantity
1.26.6.2	DP Test on load bearing welds e.g. lifting lugs / bollards. Magnetic particle examina--tion of DP test on jacking pads.	Mechanical Test	100%	BHEL Std. AA 0850129 AA 0622101 BP 0850123R BHEL Mfg.drg.		CMTC EMTC	B A	K J	Q U	W W	- -	N Y	CIP
1.26.6.3	Visual & dimension check after final welding including rim flatness, position of guides & earth connection, projection or matching of tank with cover, dimension of roller mounting pad with std. fixture of roller by turning by 90°.	Visual & Measurement	100%	BHEL Mfg.drg./ BHEL Std. TR10015 T		CMTC EMTC	B A	K J	U U	W W	- -	Y Y	CIP for rim flatness & groove dimension, jacking pads and roller fixing dimension

Megha Engineering & Infrastructures Ltd.

सुरेश कुमार गुप्ता / S.K. GUPTA
उप महाप्रबंधक / Dy. General Manager
गुणता आश्वासन-टी.सी.बी. / Quality Assurance-TCB
बी.एच.ई.एल., भोपाल / B.H.E.L., BHOPAL

MANUFACTURING QUALITY PLAN

BHARAT HEAVY ELECTRICALS LTD. BHOPAL	Item	MQP No.:	Rev. No.	Rev. Date	BHEL W. O. No.: 62007, 62009, 62010, 62011, 62014 & 62015-A-512-01	Page
Customer : M/s Megha Engg. Infra Ltd.	Auto Transformer (Up to 765 KV)	QA/TCB/31/744	~~02~~ 03	25.08.2015		26

Sl. No.	Components/ Operation & Description or Test	Type of check	Quantum of check/ Sampling with basis	Reference Document for Testing	Acceptance Norms	Format of Records	Applicable Codes 1	2	3	4	5	6	Remarks
1.26.6.4	Air leakage (Normal Pressure +35 Kpa for one hr) on assembled tank with turrets and on conservator(*).	Mechanical	100%	BHEL Test instruction format		CMTC EMTC	B A	K J	U U	W/Z W/Z	- -	Y Y	CIP
1.26.6.5	vaccum test (Type test) on assembled tank with turrets and on conservator(*).	Mechanical	On one unit	BHEL Test instruction format		CMTC	B	K	U	W/Z	-	Y	CIP (Valid type test report to be submitted for MEIL approval if not approved then Type test to be conducted)
1.26.6.6	Surface cleaning by shot blasting (for all items)	Visual	100%	BHEL Std. TR 10005 P TR 10257 P TR 10211 P TR 10257 P		CMTC EMTC	B A	K J	Q U	W W	- -	Y Y	- CIP
1.26.6.7	Visual check of paint shade, paint film thickness-inside & outside & film adhesion test	Visual & Mechanical	100%	--do--		CMTC EMTC	B A	K J	U U	W W	- -	Y Y	CIP
1.26.6.8	Conservator made of Mild Steel & fitted with caution word "Air Cell Fitted"	Visual	100%	BHEL drg		EMTC	B	K	U	W	-	Y	CIP To Varify Warning message is depicted

(*)= Vaccum test on conservator assembled with Tank will be applicable for 765 KV class Only. For 400 KV class Vaccum test will be applicable on main Tank only.

Megha Engineering & Infrastructures Ltd.

सुरेश कुमार गुप्ता / S. K. GUPTA
उप महाप्रबंधक / Dy. General Manager
गुणता आश्वासन-टी.सी.बी. / Quality Assurance-TCB
बी.एच.ई.एल., भोपाल / B.H.E.L., BHOPAL

MANUFACTURING QUALITY PLAN

BHARAT HEAVY ELECTRICALS LTD. BHOPAL	Item	MQP No.:	Rev. No.	Rev. Date	BHEL W. O. No.: 62007, 62009, 62010, 62011, 62014 & 62015-A-512-01	Page
Customer : M/s Megha Engg. Infra Ltd.	Auto Transformer (Up to 765 KV)	QA/TCB/31/744	~~02~~ 03	25.08.2015		27

Sl. No.	Components/ Operation & Description or Test	Type of check	Quantum of check/ Sampling with basis	Reference Document for Testing	Acceptance Norms	Format of Records	Applicable Codes 1	2	3	4	5	6	Remarks
1.26.7	RADIATOR										E		
1.26.7.1	DP test on lifting lug welds	Mechanical	100%	BHEL Specn. AA0850129		CMTC	B	K	Q	W/Z	-	N	Record Review
						EMTC	A	J	S	W/Z	-	N	
1.26.7.2	Surface cleaning of header support & bracing details by sand/shot blasting.	Visual	BHEL Specn.	BHEL Std. TR 10005 P TR 10257 P TR 10205 P TR 10208 P		CMTC	B	K	Q	W/Z	-	N	Record Review
						EMTC	A	J	S	W/Z	-	N	
1.26.7.3	Air Pressure Test on Elements	Mechanical	100%	BHEL Drg.		CMTC	B	K	P	W/Z	-	Y	Record Review
						EMTC	A	J	S	W/Z	-	Y	
1.26.7.4	Dimensional check after final welding - valve centre & overall dimensions	Measure -ment	100%	BHEL drg.		CMTC	B	K	U	W/Z	-	Y	CIP for 10% Qty.
						EMTC	A	J	U	W/Z	-	Y	
1.26.7.5	Air Pressure Test on radiator assembly	Mechanical	100%	BHEL drg./ BHEL Std. TR 10086 R		CMTC	B	K	U	W/Z	-	Y	CIP for 10% Qty.
						EMTC	A	J	U	W/Z	-	Y	
1.26.7.6	Visual check of paint shade, paint film thickness - out side film adhesion test.	Visual & Mechanical	100%	BHEL Std. TR 10005 P TR 10257 P TR 10205 P TR 10208 P		CMTC	B	K	U	W/Z	-	N	CIP
						EMTC	A	J	U	W/Z	-	Y	

Megha Engineering & Infrastructures Ltd.

सुरेश कुमार गुप्ता / S. K. GUPTA
उप महाप्रबंधक / Dy. General Manager
गुणवत्ता आश्वासन-TCB
भोपाल / BHOPAL

MANUFACTURING QUALITY PLAN

BHARAT HEAVY ELECTRICALS LTD. BHOPAL	Item	MQP No.:	Rev. No.	Rev. Date	BHEL W. O. No.: 62007,	Page
Customer : M/s Megha Engg. Infra Ltd.	Auto Transformer (Up to 765 KV)	QA/TCB/31/744	~~02~~ 03	25.08.2015	62009, 62010, 62011, 62014 & 62015-A-512-01	28

Sl. No.	Components/ Operation & Description or Test	Type of check	Quantum of check/ Sampling with basis	Reference Document for Testing	Acceptance Norms	Format of Records	Applicable Codes 1	2	3	4	5	6	Remarks
1.26.8	**PIPE WORK INCLUDING HEADER ASSEMBLY FOR RADIATORS**										E		
1.26.8.1	Dimensional check	Measurement & Matching	100%	BHEL drg. & Spec	CMTC		B	K	Q	W/Z	-	N	Record Review
					EMTC		A	J	S	W/Z	-	N	
1.26.8.2	Air pressure test on pipe work & header assembly for radiator	Mechanical	100%	BHEL drg. & Spec	CMTC		B	K	U	W/Z	-	N	CIP
					EMTC		A	J	U	W/Z	-	Y	
1.26.8.3	Surface cleaning by shot blasting	Visual	100%	BHEL Std.TR 10005 P TR 10257 P	CMTC		B	K	Q	W/Z	-	N	Record Review
					EMTC		A	J	S	W/Z	-	N	
1.26.8.4	Visual check of paint , shade outside paint film thickness and film adhesions test	Visual Mechanical	100%	--do--	CMTC		B	K	U	W/Z	-	Y	CIP
					EMTC		A	J	U	W/Z	-	Y	
1.27	**ON LOAD TAP CHANGER (OLTC)**										E		
1.27.1(a)	Visual check of , dimensions & operation test on surge relay	Visual Measurement	100%	As per approved drg.	CMTC		B	K	P	W/Z	-	N	
b)	Visual check of Fibre Glass Assy. used for diverter switch	Visual	100%	--do--	EMTC		A	J	S	W/Z	-	N	
1.27.2(a)	Mechanical test of diverter switch insert	Mechanical	100%	BHEL Std.TR 10005 P TR 10257 P	EMTC		A	J	S	W/Z	-	N	
b)	Paint check of OLTC Motor Drive Panel - Shade, thickness & adhesion	Visual Mechanical	100%	--do--	EMTC		A	J	U	W/Z	-	Y	CIP
1.27.3	Sequence test (If applicable)	Electrical	100%	--do--	EMTC		A	J	S	W/Z	-	N	

Megha Engineering & Infrastructures Ltd.

सुरेश कुमार गुप्ता / S. K. GUPTA

MANUFACTURING QUALITY PLAN

BHARAT HEAVY ELECTRICALS LTD. BHOPAL	Item	MQP No.:	Rev. No.	Rev. Date	BHEL W. O. No.: 62007, 62009, 62010, 62011, 62014 & 62015-A-512-01	Page
Customer : M/s Megha Engg. Infra Ltd.	Auto Transformer (Up to 765 KV)	QA/TCB/31/744	~~02~~ 03	25.08.2015		29

Sl. No.	Components/ Operation & Description or Test	Type of check	Quantum of check/ Sampling with basis	Reference Document for Testing	Acceptance Norms	Format of Records	Applicable Codes 1	2	3	4	5	6	Remarks
1.27.4	Pressure test of diverter switch oil compartment with halogen (Freon) gas	Mechanical	100%	--do--		EMTC	A	J	S	W/Z	-	N	
1.27.5	Mechanical test of tap selector with motor drive	Mechanical	100%	--do--		EMTC	A	J	S	W/Z	-	N	
1.27.6	Operation test of complete tap changer	Visual	100%	--do--		EMTC	A	J	U	W/Z	-	Y	CIP
1.27.7	Auxiliary circuits insulation test	Electrical											
1.28	**REMOTE TAP CHANGE CONTROL CUBCILE - RTCC**										E		
1.28.1	Visual, Dimensions check for shade, thickness of film & adhesions powder coating	Visual Measurement	100%	BHEL TR 10257 P		EMTC	A	J	S	W/Z	-	N	
1.28.2	Functional check - manual and electrical operation as per scheme	Mechanical Electrical	100%	BHEL Spec		EMTC	A	J	S	W/Z	-	N	
1.28.3	Check for wiring routing	Visual	100%	BHEL Spec		EMTC	A	J	S	W/Z	-	N	
1.28.4	Check for make and type of instruments / components	Visual				EMTC	A	J	S	W/Z	-	N	
1.28.5	2KV for one minute insulatio test between all live terminals & earth	Electrical		BHEL Spec		EMTC	A	J	S	W/Z	-	N	
1.28.6	Measurement of insulation resistance by 500 volts megger	Electrical	100%	BHEL Spec		EMTC	A	J	S	W/Z	-	N	

Megha Engineering & Infrastructures Ltd.

सुरेश कुमार गुप्ता / S.K. GUPTA
उप महाप्रबंधक / Dy. General Manager
गुणता आश्वासन-टी.सी.बी. / Quality Assurance-TCB
बी.एच.ई.एल., भोपाल / B.H.E.L., BHOPAL

MANUFACTURING QUALITY PLAN

BHARAT HEAVY ELECTRICALS LTD. BHOPAL	Item	MQP No.:	Rev. No.	Rev. Date	BHEL W. O. No.: 62007, 62009, 62010, 62011, 62014 & 62015-A-512-01	Page
Customer : M/s Megha Engg. Infra Ltd.	Auto Transformer (Up to 765 KV)	QA/TCB/31/744	~~02~~ 03	25.08.2015		30

Sl. No.	Components/ Operation & Description or Test	Type of check	Quantum of check/ Sampling with basis	Reference Document for Testing	Acceptance Norms	Format of Records	Applicable Codes 1	2	3	4	5	6	Remarks
1.29	OIL FLOW INDICATOR										E		
1.29.1	Visual checks & Dimensional Check	Visual Measurement	IS 2500 Pt. 1 AQL=4% Inspection level 1 Lot Size 2 to 90 — Sample Size 3	BHEL Std. TR 10050 I		CMTC	B	K	P	W/Z	-	N	Record Review
1.29.2	Full flow test, alarm test, (Switch operation between 80 to 70% of full flow) 2 KV for one minute insulation test between terminals and earth Static Pressure test at 7 Kg/cm².	Mechanical Electrical	100%	BHEL Std. TR 10050 I		CMTC	B	K	P	W/Z	-	N	Record Review
1.30	OIL PUMP (In line type & Centrifugal Type)										E		
1.30.1	Visual & Dimensional checks	Visual Mesurement	IS 2500 Pt. 1 AQL=4% Inspection level 1 Lot Size 2 to 90 — Sample Size 3	BHEL Std. TR 20011 P TR 10023 P BHEL Purchase order		CMTC	B	K	P	W/Z	-	N	Record Review
1.30.2 (a) b) c) d) e)	Oil pressure test on pump casing / assembled pump, Insulation resistance measurement, 2KV for 1 minute Insulation test between live terminals and earth, No load running of motor (check for RPM, input), Locked rotor test Performance test (discharge duty point & Power consumption)	Mechanical Electrical	100%	BHEL Std. TR 20011 P TR 10023 P BHEL Purchase order		CMTC	B	K	P	W/Z	-	Y	Record Review/ CIP

Megha Engineering & Infrastructures Ltd.

S. K. GUPTA
Dy. General Manager
Quality Assurance-TCB
BHOPAL

सुरेश कुमार गुप्ता
उप महाप्रबंधक
गुणवत्ता आश्वासन-टी.सी.बी.
भेल, भोपाल

MANUFACTURING QUALITY PLAN

BHARAT HEAVY ELECTRICALS LTD. BHOPAL	Item	MQP No.:	Rev. No.	Rev. Date	BHEL W. O. No.: 62007,	Page
Customer : M/s Megha Engg. Infra Ltd.	Auto Transformer (Up to 765 KV)	QA/TCB/31/744	~~02~~ 03	25.08.2015	62009, 62010, 62011, 62014 & 62015-A-512-01	31

Sl. No.	Components/ Operation & Description or Test	Type of check	Quantum of check/ Sampling with basis	Reference Document for Testing	Acceptance Norms	Format of Records	Applicable Codes 1	2	3	4	5	6	Remarks
1.30.3	Type test-vacuum test at 250 torr max., oil pressure test at 1 Kg/cm2 for 24 hrs., temp rise test by resistance method, IP 55 degree of protection for terminal box	Mechanical	On pump of each type/ size as per BHEL std. TR 10023P	--do--		CMTC	B	K	U	W	-	Y	CIP (Valid type test report to be submited for MEIL approval if not approved then Type test to be conducted)
1.31	**COOLING FAN AND MOTOR ASSEMBLY**										E		
1.31.1	Visual & Dimensional checks	Visual Dimensional	IS 2500 Pt. 1 AQL=4% Inspection level 1 Lot Size — Sample Size 2 to 90 — 3 91 to 280 — 13	BHEL std. TR 20029 F TR10014 F		CMTC	B	K	P	W/Z	-	N	Record Review
1.31.2	Routine & acceptance tests as per IS 2312 -as applicable	Test	BHEL Std TR10014 F	BHEL std. TR 20029 F TR10014 F/IS - 2312		CMTC	B	K	P	W/Z	-	N	Record Review
1.31.3	Type test- free air delivery, temp rise, sound level, running at reduced Voltage & IP 55 deg. of protection for terminal box	Test	BHEL Std TR10014 F	BHEL std. TR 20029 F TR10014 F IS - 2312		CMTC	B	K	U	W/Z	-	N	CIP (Valid type test report to be submitted for MEIL approval if not approved then Type test to be conducted)
1.32	**OIL FORCED AIR FORCED (OFAF) COOLER**										E		
1.32.1	Test for casing, oil chamber tube plate, finned tube & fan assembly (routine tests, power consumption and air delivery)	Test	IS 2062, IS 1545, IS 325, IEC 34-1 IEC 34-5, IS 3588	As per BHEL Drg. & relevant IS 2062, IS 1545 IS 12075, IS 325, IEC 34-1, IEC 34-5, IS 3588		CMTC	B	K	P	W/Z	-	N	Record Review
1.32.2	Out side paint film thickness, paint film adhesion test & visual check of paint shade	Visual Test Dimensioal	100%	BHEL Std. TR 10005 P		CMTC	B	K	P	W/Z	-	N	Record Review
1.32.3	Hydraulic Pressure test, final inspection for Dimensions & Visual check	Test Dimensional	100%	BHEL Drg.		CMTC	B	K	P	W/Z	-	N	Record Review
1.33	OPTICAL SENSOR, ONLINE DRYING SYSTEM, ONLINE DISSOLVED GAS ANALYSER	Review	As per supplier TC	As per BHEL/ Supplier's		CMTC	B	K	P	W/Z	-	N	Record review

Megha Engineering & Infrastructures Ltd.

सुरेश कुमार गुप्ता / S.K. GUPTA
उप महाप्रबंधक / Dy. General Manager
TCB

MANUFACTURING QUALITY PLAN

BHARAT HEAVY ELECTRICALS LTD. BHOPAL	Item	MQP No.:	Rev. No.	Rev. Date	BHEL W. O. No.: 62007, 62009, 62010, 62011, 62014 & 62015-A-512-01	Page
Customer : M/s Megha Engg. Infra Ltd.	Auto Transformer (Up to 765 KV)	QA/TCB/31/744	~~02~~ 03	25.08.2015		32

Sl. No.	Components/ Operation & Description or Test	Type of check	Quantum of check/ Sampling with basis	Reference Document for Testing	Acceptance Norms	Format of Records	Applicable Codes 1	2	3	4	5	6	Remarks
SECTION B : IN PROCESS INSPECTION													
2.1	**MEGNETIC CORE**										E		
2.1.1	Check for CRGO laminations dimensions, burr & edge bow	Visual Measurement	One Sample per Transformer	BHEL Std TR 10141C		CMTC EMTC	B A	K J	U Q	W W	- -	N N	CIP
2.1.2	Check for CRGO at core building & assembly	Visual & Measurement	100%	BHEL drg.		EMTC	A	J	S	W/Z	-	Y	Record Review
2.1.3	Isolation test at 2 KV AC for 1 minute between core to yoke frame and yoke bolt to clamp plate / end frame	Electrical	100%	BHEL Std. TR 10129 I		EMTC	A	J	S	W/Z	-	N	Record Review
2.2	**WINDING**												
2.2.1	Brazing procedure & Brazer qualification	Review	100%	BHEL Std. BP 0631199, & BHEL Brazing procedure		EMTC	A	J	S	W		Y	Record Review
2.2.2	Physical checking of drum label.	Visual	IS 2500 Pt. 1 AQL=4% Inspection level 1 Lot Size / Sample Size 2 to 90 / 3 91 to 280 / 13	BHEL Spec.		EMTC	A	J	S	W/Z	-	N	Record Review
2.2.3	Checking for coil mfg. - lead position, lead length, cross over/transposition position, ID, OD, Lateral Depth of Wdg., No. of turms/ sections, lead anchoring, spacer block alignment.	Visual Measurement	100%	BHEL Elec. Spec./ BHEL drg.		EMTC	A	J	S	W	-	N	Record Review
2.2.4	Coil height	Measurement	100%	BHEL Elec. Spec./ BHEL drg.		EMTC	A	J	S	W	-	N	Record Review

Megha Engineering & Infrastructures Ltd.

सुरेश कुमार गुप्ता S. K. GUPTA

MANUFACTURING QUALITY PLAN

BHARAT HEAVY ELECTRICALS LTD. BHOPAL	Item	MQP No.:	Rev. No.	Rev. Date	BHEL W. O. No.: 62007, 62009, 62010, 62011, 62014 & 62015-A-512-01	Page
Customer : M/s Megha Engg. Infra Ltd.	Auto Transformer (Up to 765 KV)	QA/TCB/31/744	~~02~~ 03	25.08.2015		33

Sl. No.	Components/ Operation & Description or Test	Type of check	Quantum of check/ Sampling with basis	Reference Document for Testing	Acceptance Norms	Format of Records	Applicable Codes 1	2	3	4	5	6	Remarks
2.2.5	Testing of Winding (Tests are done at different stage from 2.2.2 to 2.2.4 as per applicability) - Buzzer test, measurement of resistance (actual test value to be recorded), megger testing. Isolation test, sequence test, ratio test and circulating current test (if reqd.)	Electrical	100%	BHEL Elec. Spec./ Drg./Std. TR 10129 I		EMTC	A	J	S	W	-	Y	CIP
2.2.6	Buckling load test for epoxy strip bonded conductor sample	Test	Buckling load test for GPICC (drying and imprignation process on test samples of GPICC, curing process should be over before expiry of shelf life of GPICC)	with +15%-10% of normal value indicated in BHEL PO/ BHEL Spcn TRE 078		EMTC	A	J	U	W/Z	-	Y	CIP
2.2.7	Manual separation of conductor for cured sample.	Test	1 Sample per size per lot	BHEL Spec		EMTC	A	J	U	W/Z	-	Y	CIP
2.3	CORE AND COIL ASSEMBLY												
2.3.1	Check for assembly of bottom insulation on bottom tank & placement of core in bottom tank, proper alignment of blocks, 2KV for one minute flash test between: Core & yoke bolts, core & end frame, end frame & yoke bolts & end frame & bottom tank.	Visual Electrical	100%	BHEL std. TR 10129 I		EM Records	A	J	S	W	-	N	Record Review

Megha Engineering & Infrastructures Ltd.

सुरेश कुमार गुप्ता / S.K. GUPTA
उप महाप्रबंधक / Dy. General Manager
गुणता आश्वासन-टी.सी.बी./Quality Assurance-TCB
बी.एच.ई.एल., भोपाल / B.H.E.L., BHOPAL

MANUFACTURING QUALITY PLAN

BHARAT HEAVY ELECTRICALS LTD. BHOPAL	Item	MQP No.:	Rev. No.	Rev. Date	BHEL W. O. No.: 62007, 62009, 62010, 62011, 62014 & 62015-A-512-01	Page
Customer : M/s Megha Engg. Infra Ltd.	Auto Transformer (Up to 765 KV)	QA/TCB/31/744	~~02~~ 03	25.08.2015		34

Sl. No.	Components/ Operation & Description or Test	Type of check	Quantum of check/ Sampling with basis	Reference Document for Testing	Acceptance Norms	Format of Records	Applicable Codes 1	2	3	4	5	6	Remarks
2.3.2	a) Terminal gear mounting, lead position and insulation, electrical connections, 2KV for one minute flash test at post terminal gear stage between : Core & yoke bolts, core & end frame & yoke bolts	Visual Electrical	100%	BHEL std. TR 10129 I BHEL drg.		EMTC	A	J	S	W	-	N	
	b) Check for ratio resistance magnetic balance (NA for 1 Ph Trnf.) & magnetizing current tests. 2 KV Isolation test between core & core clamp	Electrical	100%	BHEL std. TR 10129 I		EMTC	A	J	U	W/Z	-	N	CIP
2.3.3	Final inspection of core & coils assy.- Visual check for completeness, cleanliness	Visual	100%	BHEL std. TR 10129 I BHEL drg.		EMTC	A	J	S	W	-	N	Record Review
2.3.4	1st VPD of Active Part (Without tanking) Vacuum, Temperature, Duration, water extraction rates etc to be monitored	Record Review	100%	BHEL applicable std TR10215P/ TR10218P/TR10266P			A	J	U	W	-	Y	VPD plot (Vapour Pr. Vs time) (temp Vs time) to be submitted (For 765 Kv Only)
	If active part soaked in oil: Oil parameter need to be varified before impregnation Electric strength Water content Resistivity at 90° C Tan delta at 90° C IFT at 27°C	Chemical Electrical	100%	BHEL applicable std TR10215P/ TR10218P/TR10266P			A	J	U	W	-	Y	CIP Oil sampling to be done before MEIL.

Megha Engineering & Infrastructures Ltd.

S. K. GUPTA
सुरेश कुमार गुप्ता
उप महाप्रबंधक / Dy. General Manager
गुणता आश्वासन-टी.सी.बी. / Quality Assurance-TCB
BHOPAL

MANUFACTURING QUALITY PLAN

BHARAT HEAVY ELECTRICALS LTD. BHOPAL	Item	MQP No.:	Rev. No.	Rev. Date	BHEL W. O. No.: 62007, 62009, 62010, 62011, 62014 & 62015-A-512-01	Page
Customer : M/s Megha Engg. Infra Ltd.	Auto Transformer (Up to 765 KV)	QA/TCB/31/744	~~02~~ 03	25.08.2015		35

Sl. No.	Components/ Operation & Description or Test	Type of check	Quantum of check/ Sampling with basis	Reference Document for Testing	Acceptance Norms	Format of Records	Applicable Codes 1	2	3	4	5	6	Remarks
2.4	TREATMENT PROCESS TANKING AND ASSEMBLY												
2.4.1	Check for tank preparation, cleanliness of tank, serial number of current transformers mounted on end frame/turrets, tanking proper fit in tank & electrical clearances.	Visual Measurement	100%	BHEL drg.		EM Records	A	J	S	W/Z	-	N	Record Review
2.4.2	Check for drying and impreg--nation (2nd Process) of transformer, end point if vacuum drying -absolute pressure, job temp. & rate of condensed water.	Mechanical	100%	BHEL std. TR 10215 P TR 10218 P TR 10266 P		EMTC	A	J	U	W/Z	-	Y	CIP (2 nd Drying process plot to be submitted) (For 765 Kv only)
2.4.3	Check for OIL used for impregnation. Following Oil parameters need to be verifed before start of impregnation after 2nd Process. Electric strength Water content Resistivity at 90^0 C Tan delta at 90^0 C IFT at 27°C	Chemical Electrical	100%	IS 1866 BHEL Std. TR TR 10215 P TR 10218 P TR 10266 P			A	J	U	W	-	Y	CIP
2.4.4	Insertion of dummy insulation test block	Test	One sample per Transformer	0.5% moisture max. by weight		EMTC	A	J	U	W	-	N	CIP

Megha Engineering & Infrastructures Ltd.

सुरेश कुमार गुप्ता S. K. GUPTA
उप महाप्रबंधक / Dy. General Manager
गुणता आश्वासन-टी.सी.बी./Quality Assurance-TCB
भोपाल BHOPAL

MANUFACTURING QUALITY PLAN

BHARAT HEAVY ELECTRICALS LTD. BHOPAL	Item	MQP No.:	Rev. No.	Rev. Date	BHEL W. O. No.: 62007, 62009, 62010, 62011, 62014 & 62015-A-512-01	Page
Customer : M/s Megha Engg. Infra Ltd.	Auto Transformer (Up to 765 KV)	QA/TCB/31/744	~~02~~ 03	25.08.2015		36

Sl. No.	Components/ Operation & Description or Test	Type of check	Quantum of check/ Sampling with basis	Reference Document for Testing	Acceptance Norms	Format of Records	Applicable Codes 1	2	3	4	5	6	Remarks
2.4.5	Checking for soaking servicing Retighten of all screw joints, yoke, bolts pressing of active part, fitting of wall shunts & packing, 2KV for one minute flash test between core & end frame, core & yoke bolts and end frame & yoke bolts.	Visual Electrical	100%	BHEL Std. TR 10129I TR 10215 I TR 10218 P		EM Record	A	J	S	W/Z	-	N	Record Review
2.4.6	Checking for final tanking & repeat 2 KV for one minute flash test	Visual Electrical	100%	--do--		EM Record	A	J	S	W/Z	-	N	Record Review
2.4.7	Check for characteristics of insulating oil after circulating in transformer 1. Electric strength 2. Water content 3. Resistivity at 90° C Tan delta at 90° C 4. Tan-delta at 90° C 5. IFT at 27° C 6. Particle Counting	Chemical Electrical	One sample from bottom of the transformer	IS 1866		EM Record	A	J	U	W/Z	-	Y	CIP
2.5	**COMPLETE TRANSFORMER ASSY. FOR FINAL TEST**												
2.5.1	Check for completion of assy. for final routine test/type test (as applicable) case fitting, connection of C.T. lead to terminal boards, serial no. of bushing, check mounting of cooling equipment & cooling pipe work	Visual	100%	BHEL Mfg. drg./ Customer appd. OGA drg.		EMTC Records	A	J	S	W	-	N	Record Review

Megha Engineering & Infrastructures Ltd.

सुरेश कुमार गुप्ता / S. K. GUPTA
उप महाप्रबंधक / Dy. General Manager
गुणता आश्वासन-टी.सी.बी. / Quality Assurance-TCB
बी एच.ई.एल., भोपाल / B.H.E.L., BHOPAL

MANUFACTURING QUALITY PLAN

BHARAT HEAVY ELECTRICALS LTD. BHOPAL	Item	MQP No.:	Rev. No.	Rev. Date	BHEL W. O. No.: 62007,	Page
Customer : M/s Megha Engg. Infra Ltd.	Auto Transformer (Up to 765 KV)	QA/TCB/31/744	02	25.08.2015	62009, 62010, 62011, 62014 & 62015-A-512-01	37

Sl. No.	Components/ Operation & Description or Test	Type of check	Quantum of check/ Sampling with basis	Reference Document for Testing	Acceptance Norms	Format of Records	Applicable Codes 1	2	3	4	5	6	Remarks
SECTION : FINAL INSPECTION AND TESTING (All test as per relevant contract need to be ensured)													
3.1	ROUTINE TESTS All applicable routine test as per customer approved inspection test schedule	Test	100%	Customer appd. test Schedule / IS 2026	EM TC Records		A	J	U	W/Z	-	Y	CIP (As per apprd test schedule)
3.2	TYPE TESTS & SPECIAL TESTS												
	(All type tests & Special test required as per the contract)	Test	As per customer approved inspection test schedule	As per customer approved inspection test schedule	EMTC		A	J	U	W	-	Y	CIP (As per apprd test schedule)
4	PACKING AND DESPATCH	Visual	-	BHEL Drg./ Spec	EMTC		A	J	S	W	-	N	
	(Visual inspection of Transformer after test before nitrogen filling)												
4.1	Pre-shipment check-Nitrogen gas tightness, proper blanking of all openings, mounting of Nitrogen gas cylinder & regularization of pressure	Visual	Each Transformer	-do-	EMTC		A	J	S	W	-	N	
4.2	Dew Point measurement a) Before Filling b) After Filling c) After 24 hours of filling	Test	Each Transformer	-do-	EMTC		A A A	J J J	U U U	W W W	- - -	Y Y Y	CIP CIP CIP
4.3	Verification of completeness of accessories	Visual	-do-	-do-	EM Records		A	J	S	W	-	N	
4.4	Check for soundness of packing of accessories and fittings	Visual	-do-	-do-	EM Records		A	J	S	W	-	N	
4.5	Installation of impact Recorder	Visual	-do-	-do-			A	J	S	W	-	N	
4.6	Verification of CIP reference on packing case	Visual	-do-	-do-			A	J	S	W	-	Y	
4.7	Check of paint thickness & adhesion	Visual	-do-	-do-			A	J	U	W	-	Y	CIP
4.8	Check for verification of a) No. of impact recorders b) Desired locations of impact recorders. c) No. of Nitrogen Cylinders.	Visual	-do-	-do-			A	J	U	W	-	Y	CIP

Megha Engineering & Infrastructures Pvt. Ltd.

सुरेश कुमार गुप्ता / S. K. GUPTA
उप महाप्रबंधक / Dy. General Manager

MASTER GENERAL ASSEMBLY

BHEL, Bhopal Transformer Engg. Department

View MGES Detail

W. O. No.	62007F51222	Year Code:	2012	MGES_No:	14989904285	MID NO:	406410012
Customer:	Megha Engg. (Repair)	Rating:	500 MVA, 765/400/33 kV, 1 Ph, Auto Transformer	Prod_GR:	498	QA_NO:	
Elec. Spec.	601339	Trfr_Sl_Nos	6007319			No_Units	1
Design Group	SHRI PAWAN PRAJAPAT	Elec. DO	SHRI ARUN KUMAR SAHOO	Mech.DO	SHRI SAURABH CHAUHAN	Ent Dt :	8/4/2021 1:15:38 PM

>> Engg PI List >> Engg Status >> Engg.PI. >> Imported Engg.PI. >> GSOS PI. >> All.PI. >> MBox Shiplist >> DCA Between Dates

CTSO Tap Changer Data

Manufacturing Plan : 6007319

Shipping List :

Sl. No.	Description	Drg. no.	Rev No.	Var. No	Qty	Issue dt.	Choose	Remarks	Trm_dt	Docket
1	CORE AND END FRAME ASSY	04987000002	01	00	1	8/4/2021	Y	ALL INSULATION TO BE CALLED FRESH.		
2	CORE LAMINATION	14987000022	02	00	1	8/4/2021	Y	AS PER MOM		
7	LV WINDING ASSY	14987200009	00	00	1	9/6/2021	Y	LVm winding		
8	HV WINDING ASSY	14987400010	00	00	1	9/6/2021	Y	SERIES winding		
10	TAPPING WINDING ASSY	14987500009	00	00	1	1/8/2022	Y	Regulation wdg.		
12	COMPOSITE WINDING LV + TAP	14987500008	00	00	1	9/6/2021	Y	CmpW-Lws winding		
14	COMMON WINDING	14987300003	00	00	1	9/6/2021	Y	COMMON winding		
15	INSIDE FITTINGS	14988100022	00	00	1	12/20/2021	Y			
17	HV T.G. ASSY	14988200007	00	00	1	1/20/2022	Y	drg. no. was 14988200005		
18	TAPPING T.G. ASSY	14988300005	00	00	1	1/20/2022	Y	14988300002		
21	OUTSIDE SIDE FITTINGS	04981900002	03	00	1	8/4/2021	Y			
22	SET OF GASKET FOR TREATMENT	34985000004	00	02	1	8/4/2021	Y			1
23	SET OF GASKET FOR ERECTION	34985000004	00	01	1	8/4/2021	Y			1
24	SET OF GASKET FOR HEAT RUN	34985000004	00	03	1	8/4/2021	Y			1
29	TOP TANK ASSY	04981600001	06	00	1	8/4/2021	Y			
31	BOTTOM TANK ASSY	04981700001	02	00	1	8/4/2021	Y			
34	HV TURRET ASSY. U PHASE	24982100008	03	00	1	8/4/2021	Y			
38	IV TURRET ASSY. U PHASE	24982400005	05	00	1	8/4/2021	Y			
42	LV TURRET ASSY. U PHASE	24982700003	02	00	2	8/4/2021	Y			
46	LV N. TURRET ASSY.	24983000005	02	00	1	8/4/2021	Y			
51	BLANKING I	34988800022	00	00	1	3/14/2022	Y			
59	BLANKING II	34988800021	00	00	1	8/4/2021	Y			
86	MISC	04980000008	00	0	1	8/28/2021	Y	_		
112	PAINTING DETAILS FOR TANK,E/F ASSY AND ACCESSORIES	TR10005P	21	00	1	8/4/2021	Y	SL. NO. 22 SHADE RAL 7035		