| BILL OF MATERIAL | DEP NO | NO OF IT | NO OF VAR | TYPE OF PRODUCT | WORKORDER | DRG NO | CORE CODE | REV |
|---|---|---|---|---|---|---|---|---|
| | 406 | 24 | 2 | 500MVA, UPPTCL | 67038A51201 | 14647000164 | 65170700 | 02 |

| TITLE | SHT NO |
|---|---|
| TOP END FRAME TOP END FRAME H | 1 OF 2 |

| DU | VAR03 | VAR02 | VAR01 | VAR00 | REMARKS | IT NO | DESCRIPTION / MAT SIZE | DRAWING NO / DETAILS | IT. / VAR | MATCODE / MAT SPEC | A/C | UT | UNIT WT / QTY | G / S / ZONE |
|---|---|---|---|---|---|---|---|---|---|---|---|---|---|---|
| | | | 00002 | 00002 | TO DETAIL | 001 | END FRAME PART (HTS) TK 25, WDT 858, LEN 2300, ID, OD, DIM1 | | | AA1011822156 / AA10122 | | KG | 387.760 | |
| | | | 00001 | 00001 | TO DETAIL | 002 | END FRAME PART (HTS) TK 25, WDT 858, LEN 2115, ID, OD, DIM1 | | | AA1011822156 / AA10122 | | KG | 356.680 | |
| | | | 00001 | 00001 | TO DETAIL | 003 | END FRAME PART (HTS) TK 25, WDT 858, LEN 1815, ID, OD, DIM1 | | | AA1011822156 / AA10122 | | KG | 305.990 | |
| | | | 00002 | 00002 | TO DETAIL, M/C TO 14TK SEE SECTION F-F | 004 | LIFTING LUG TK 16, WDT 330, LEN 435, ID, OD, DIM1 | | | AA1011822113 / AA10122 | | KG | 18.050 | |
| | | | 00004 | 00004 | TO DETAIL SEE SECTION F-F | 005 | LIFTING LUG TK 20, WDT 306, LEN 423, ID, OD, DIM1 | | | AA1011822130 / AA10122 | | KG | 18.550 | |
| | | | 00002 | 00002 | TO DETAIL SEE SECTION B-B | 006 | PAD TK 25, WDT 180, LEN 275, ID, OD, DIM1 | | | AA1011822156 / AA10122 | | KG | 9.720 | |
| | | | 00001 | 00001 | TO DETAIL SEE SECTION E-E | 007 | PAD TK 25, WDT 260, LEN 275, ID, OD, DIM1 | | | AA1011822156 / AA10122 | | KG | 14.040 | |
| | | | 00001 | 00001 | TO DETAIL SEE SECTION E-E | 008 | PAD TK 16, WDT 240, LEN 255, ID, OD, DIM1 | | | AA1011822113 / AA10122 | | KG | 7.690 | |
| | | | 00002 | 00002 | TO DETAIL SEE SECTION A-A | 009 | PAD TK 25, WDT 100, LEN 275, ID, OD, DIM1 | | | AA1011822156 / AA10122 | | KG | 5.400 | |
| | | | 00012 | 00012 | C=65 L=380 SEE SECTION G-G | 010 | 40 TONN DASHPOT GUIDE ASSY. TK, WDT, LEN, ID, OD, DIM1 | 34997000046 | 00 | | | KG | 34.820 | |
| | | | 00012 | 00012 | TO DETAIL & SEE SECTION G-G | 011 | GUIDE ASSY. PAD TK 25, WDT 240, LEN 200, ID, OD, DIM1 | | | AA1011822156 / AA10122 | | KG | 9.430 | |
| | | | 00001 | 00001 | SECTION C-C, | 012 | BACK PLATE TK 25, WDT 305, LEN 8530, ID, OD, DIM1 | | | AA1011822156 / AA10122 | | KG | 512.230 | |

| DISTRIBUTION DETAILS | | | | REV NO. 2 | PREP BY | CKD BY | APPD BY | DATE 03 DEC 2018 |
|---|---|---|---|---|---|---|---|---|
| TRE | TRM | TRX | FTM | PREP BY | CKD BY | APPD BY | DATE | |
| 1 | 3 | 1 | 3 | RP | LK | AKP | 04 JUL 2018 | DRG NO 14647000164 / SHT 1 OF 2 |

| BILL OF MATERIAL | DEP NO | NO OF IT | NO OF VAR | TYPE OF PRODUCT | WORKORDER | DRG NO | CORE CODE | REV |
|---|---|---|---|---|---|---|---|---|
| | 406 | 24 | 2 | 500MVA, UPPTCL | 67038A51201 | 14647000164 | 65170700 | 02 |
| | | | | | TITLE: TOP END FRAME TOP END FRAME H | | | SHT NO 2 OF 2 |

| DU | VAR03 | VAR02 | VAR01 | VAR00 | REMARKS | IT NO | DESCRIPTION / MAT SIZE | TK | WDT | LEN | ID | OD | DIM1 | DRAWING NO / DETAILS | IT. | MATCODE / MAT SPEC | A/C | UT | UNIT WT / QTY | G/S / ZONE |
|---|---|---|---|---|---|---|---|---|---|---|---|---|---|---|---|---|---|---|---|---|
| | | | 00003 | | TO DETAIL<br>SEE SECTION E-E & F-F | 013 | END FRAME PART | 25 | 200 | 279 | | | | | | AA1011822156<br>AA10122 | | KG | 13.700 | |
| | | | 00003 | | CUT TO DETAIL<br>65 X 65 X 6 X 50LG<br>SEE SECTION E-E & F-F | 014 | R.S. ANGLE | | | 50 | | | | | | AA1012508099<br>AA10108 | | KG | 0.305 | |
| | | | 00007 | 00007 | TO DETAIL, | 016 | PAD | 25 | 100 | 180 | | | | | | AA1011822156<br>AA10122 | | KG | 3.530 | |
| | | | 00006 | 00006 | SEE SECTION D-D | 017 | PAD | 25 | 180 | 275 | | | | | | AA1011822156<br>AA10122 | | KG | 9.720 | |
| | | | 00006 | 00006 | TO DETAIL,<br>SECTION H-H, I-I | 018 | PRESSURE PAD | 30 | 100 | 252 | | | | | | AA1011819139<br>AA10119 | | KG | 5.470 | |
| | | | 00006 | 00006 | TO DETAIL,<br>SEE SECTION H-H | 019 | PRESSURE PAD | 30 | 100 | 460 | | | | | | AA1011819139<br>AA10119 | | KG | 12.830 | |
| | | | 00006 | 00006 | TO DETAIL,<br>SEE SECTION H-H<br>FOR IT.-018 | 020 | GUSSET | 20 | 100 | 157 | | | | | | AA1011822130<br>AA0122 | | KG | 2.460 | |
| | | | 00004 | 00004 | TO DETAIL, | 022 | PLATE ( FOR M42 TIE ROD) | 25 | 200 | 200 | | | | | | AA1011822156<br>AA10122 | | KG | 7.860 | |
| | | | 00006 | 00006 | TO DETAIL,<br>SEE SECTION H-H<br>FOR IT-019 | 023 | GUSSET | 20 | 150 | 350 | | | | | | AA1011822156<br>AA10122 | | KG | 9.040 | |
| | | | 00004 | 00004 | TO DETAIL<br>WITH IT.022 | 024 | GUSSET | 20 | 100 | 150 | | | | | | AA1011822130<br>AA10122 | | KG | 2.360 | |

2988. 2946.4

| DISTRIBUTION DETAILS | | | | | REV NO. 2 | PREP BY | CKD BY | APPD BY | DATE 03 DEC 2018 |
|---|---|---|---|---|---|---|---|---|---|
| TRE | TRM | TRX | FTM | | PREP BY | CKD BY | APPD BY | DATE | |
| 1 | 3 | 1 | 3 | | RP | LK | AKP | 04 JUL 2018 | DRG NO 14647000164 SHT 2 OF 2 |

THE INFORMATION ON THIS DOCUMENT IS THE PROPERTY OF BHARAT HEAVY ELECTRICALS LIMITED.

FIRST ANGLE PROJECTION

(ALL DIMENSIONS ARE IN mm)

DRG.NO. 1 464 70 00164

NOTES:-

1. FOR GENERAL NOTES REFER DRG. 349970000093
2. VAR.00 IS FOR HV SIDE AND VAR.01 IS FOR LV SIDE.
3. WELDING AS PER DRG. 34997000095 UNLESS IT IS SPECIFIED.
4. FOR BOM RFERE DE- LINK BOM NO-14647000164

| REV | DATE | ALTERED / CHECKED / APPROVED | | ZONE | DESCRIPTION |
|---|---|---|---|---|---|
| 02 | 24.11.18 | RP / LK / AKP | | 02 | DIM. OF IT. 016 IN ZONE D-2, G-2, D-12 & G-12 WAS 325 IN VAR.00 & VAR.01 RESPECTIVELY. |
| 01 | 16.08.18 | RP / LK / AKP | | 01 | (I) ADDL., QTY OF IT.022 ADDED IN VAR.00 (ZONE 6-E&9-E) IN VAR.01 (ZONE 6-H&9-H) (II) IT.022 QTY. WAS 2 FOR EACH VAR.00 & VAR.01 (III) IT.019 LG. WAS 415 & IT.023 LENGTH WAS 320 |

ADDITIONAL INFORMATION
W.O. 67038-A-512-01

STATUS OF DRAWING: U

DISTRIBUTION OF PRINTS

उत्पाद का प्रकार या ग्राहक /परियोजना का नाम
TYPE OF PRODUCT OR NAME OF CUSTOMER/PROJECT: 500 MVA, 400/230/33KV, 3- PHASE AUTO TRANSFORMER
M/S UPPTCL

भारत हेवी इलेक्ट्रिकल्स लिमिटेड भोपाल
BHARAT HEAVY ELECTRICALS LTD. BHOPAL

| | नाम NAME | हस्ता.SIGN | दि. DATE |
|---|---|---|---|
| बनाया DRN | RP | [signature] | 19/07/18 |
| जाँचा CHD | LK | [signature] | 19/07/18 |
| स्वीकृत APPD | NM/AD | -SD- | 19/07/18 |

विभाग DEPT: टीआरई TRE
कोड CODE: 406
SCALE अनुपात
भार कि.ग्रा. WEIGHT(kg)
असे. ड्राईंग का संदर्भ REF TO ASSY DRG

शीर्षक /TITLE: END FRAME ASSY.

DRAWING NO. 1 464 70 00164
पुन. REV 02
पृष्ठ क.SHT NO. पृष्ठों की सं.NO.OF SHT.

| BILL OF MATERIAL | DEP NO | NO OF IT | NO OF VAR | TYPE OF PRODUCT | WORKORDER | DRG NO | CORE CODE | REV |
|---|---|---|---|---|---|---|---|---|
| | 406 | 14 | 0 | 500MVA3PH TRANSF UPPTCL | 67038A51201 | 14647000165 | 65170704 | 02 |
| | | | | | TITLE: H.V.CLAMP PLATE H.V.CLAMP PLATE | | | SHT NO 1 OF 1 |

| DU | VAR03 | VAR02 | VAR01 | VAR00 | REMARKS | IT NO | DESCRIPTION / MAT SIZE | TK | WDT | LEN | ID | OD | DIM1 | DRAWING NO / DETAILS | IT. / VAR | MATCODE / MAT SPEC | A/C | UT | UNIT WT / QTY | G/S / ZONE |
|---|---|---|---|---|---|---|---|---|---|---|---|---|---|---|---|---|---|---|---|---|
| | | | 00001 | 00001 | TO DETAIL | 001 | HORIZONTAL CL PLATE (HTS) | 20 | 325 | 8430 | | | | | | AA1011822130 / AA10122 | | KG | 375.510 | |
| | | | 00003 | 00003 | DIA 95 | 003 | TIGHTENING NUT FOR GUIDEPIN | | | | | | | 24998100016 | 002 / 00 | BP9016054766 | | | 1.900 | |
| | | | 00003 | 00003 | TO DETAILS<br>EN10025 GRADE S-690QL | 004 | MAIN CLAMP PLATE (HTS) | 20 | 740 | 3785 | | | | | | | | KG | 203.170 | |
| | | | 00002 | 00002 | TO DETAILS | 007 | AUX CLAMP PLATE (HTS) | 20 | 200 | 3785 | | | | | | AA1011822130 / AA10122 | | KG | 89.060 | |
| | | | 00004 | 00004 | | 008 | PAD (HTS) | 20 | 180 | 204 | | | | | | AA1011822130 / AA10122 | | kg | 5.770 | |
| | | | 00004 | 00004 | | 009 | PAD (HTS) | 20 | 180 | 294 | | | | | | AA1011822130 / AA10122 | | kg | 8.310 | |
| | | | 00003 | 00003 | | 010 | GUIDE PIN DIA 95 | | | | | | | 34998100039 | 001 | | | KG | 5.600 | |
| | | | 00008 | 00008 | | 011 | STOPPRER | 3.15 | 30 | 20 | | | | | | AA1011713136 / AA10113 | | KG | 0.014 | |
| | | | 00003 | 00003 | | 012 | PAD | 10 | 220 | 280 | | | | | | AA1011808072 / AA10108 | | KG | 4.840 | |
| | | | 00002 | 00002 | | 013 | PAD | 10 | 120 | 280 | | | | | | AA1011808072 / AA10108 | | KG | 2.640 | |

1262. 1261.9

| DISTRIBUTION DETAILS | | | | | REV NO. 2 | PREP BY | CKD BY | APPD BY | DATE 27 OCT 2018 |
|---|---|---|---|---|---|---|---|---|---|
| TRE | TRM | TR | FTM | | PREP BY | CKD BY | APPD BY | DATE | |
| 1 | 3 | 1 | 6 | | RP | AKP | AKP | 17 JUL 2018 | DRG NO 14647000165 SHT 1 OF 1 |

FIRST ANGLE PROJECTION

(ALL DIMENSIONS ARE IN mm)

DRG.NO. 1 464 70 00165

THE INFORMATION ON THIS DOCUMENT IS THE PROPERTY OF BHARAT HEAVY ELECTRICALS LIMITED. IT MUST NOT BE USED DIRECTLY OR INDIRECTLY IN ANY WAY DETRIMENTAL TO THE INTEREST OF THE COMPANY.

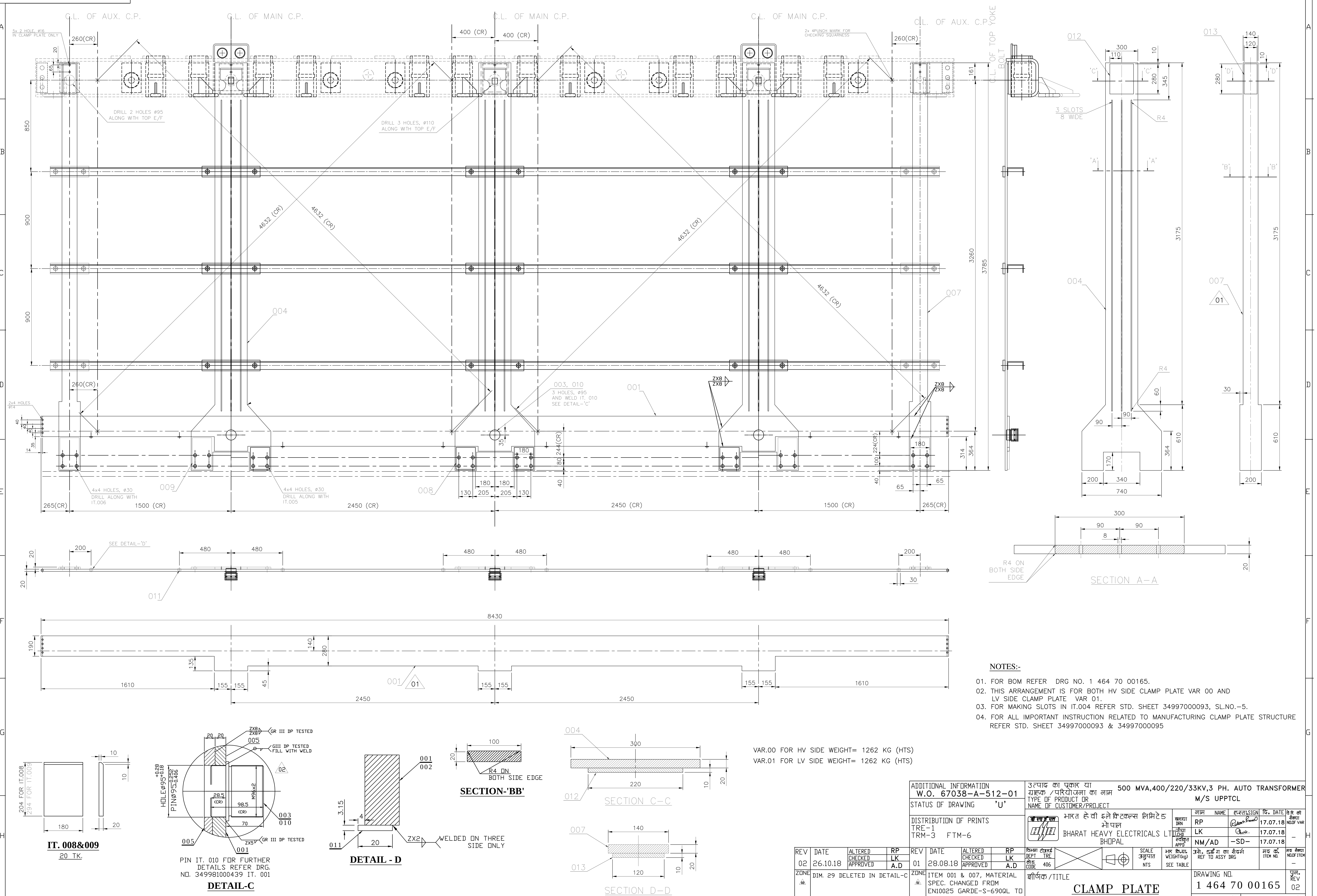


**NOTES:-**

01. FOR BOM REFER DRG NO. 1 464 70 00165.
02. THIS ARRANGEMENT IS FOR BOTH HV SIDE CLAMP PLATE VAR 00 AND LV SIDE CLAMP PLATE VAR 01.
03. FOR MAKING SLOTS IN IT.004 REFER STD. SHEET 34997000093, SL.NO.-5.
04. FOR ALL IMPORTANT INSTRUCTION RELATED TO MANUFACTURING CLAMP PLATE STRUCTURE REFER STD. SHEET 34997000093 & 34997000095

VAR.00 FOR HV SIDE WEIGHT= 1262 KG (HTS)
VAR.01 FOR LV SIDE WEIGHT= 1262 KG (HTS)

| REV | DATE | | | ZONE | |
|---|---|---|---|---|---|
| 02 | 26.10.18 | ALTERED RP / CHECKED LK / APPROVED A.D | | 02 | DIM. 29 DELETED IN DETAIL-C |
| 01 | 28.08.18 | ALTERED RP / CHECKED LK / APPROVED A.D | | 01 | ITEM 001 & 007, MATERIAL SPEC. CHANGED FROM EN10025 GARDE-S-690QL TO AA10122. |

ADDITIONAL INFORMATION
W.O. 67038-A-512-01
STATUS OF DRAWING 'U'

DISTRIBUTION OF PRINTS
TRE-1
TRM-3 FTM-6

उत्पाद का प्रकार या ग्राहक /परियोजना का नाम
TYPE OF PRODUCT OR NAME OF CUSTOMER/PROJECT
500 MVA,400/220/33KV,3 PH. AUTO TRANSFORMER
M/S UPPTCL

भारत हेवी इलेक्ट्रिकल्स लिमिटेड भोपाल
BHARAT HEAVY ELECTRICALS LTD. BHOPAL

| | नाम NAME | हस्ता.SIGN | दि. DATE | वेरि की संख्या NO.OF VAR |
|---|---|---|---|---|
| बनाया DRN | RP | [signature] | 17.07.18 | – |
| जांचा CHD | LK | [signature] | 17.07.18 | |
| स्वीकृत APPD | NM/AD | -SD- | 17.07.18 | |

| विभाग टीआरई DEPT TRE / कोड CODE 406 | SCALE अनुपात | भार कि.ग्रा. WEIGHT(kg) | असे. ड्राइंग का संदर्भ REF TO ASSY DRG | मद क्र. ITEM NO. | मद संख्या NO.OF ITEM |
|---|---|---|---|---|---|
| | NTS | SEE TABLE | | | – |

शीर्षक /TITLE
**CLAMP PLATE**

DRAWING NO. 1 464 70 00165 — पुन. REV 02
पृष्ठ क्र.SHT NO. 01 — NO.OF SHT. 01

REF.DRG.NO. 1 464 70 00158

SIGN.DATE

| BILL OF MATERIAL | DEP NO | NO OF IT | NO OF VAR | TYPE OF PRODUCT | WORKORDER | DRG NO | CORE CODE | REV |
|---|---|---|---|---|---|---|---|---|
| | 406 | 60 | 0 | 500MVA 3PH AUTO TRF.UPPTC | 67038A51201 | 14647000167 | 65170700 | 01 |
| | | | | | TITLE: CORE AND END FRAME ASSY. TOP END FRAME H | | | SHT NO 1 OF 5 |

| DU | VAR03 | VAR02 | VAR01 | VAR00 | REMARKS | IT NO | DESCRIPTION / MAT SIZE | DRAWING NO / DETAILS | IT. / VAR | MATCODE / MAT SPEC | A/C | UT | UNIT WT / QTY | G/S / ZONE |
|---|---|---|---|---|---|---|---|---|---|---|---|---|---|---|
| | | | | 00001 | STEEL PART | 001 | H.V. CLAMP PLATE (TK WDT LEN ID OD DIM1) | 34647000323 | 001 | | | KG | 1262.000 | |
| | | | | 00001 | STEEL PART | 002 | L.V. CLAMP PLATE (TK WDT LEN ID OD DIM1) | 34647000323 | 002 | | | KG | 1261.900 | |
| | | | | 00001 | STEEL PART | 003 | H.V. TOP ENDFRAME (TK WDT LEN ID OD DIM1) | 34647000323 | 003 | | | KG | 2893.500 | |
| | | | | 00001 | STEEL PART | 004 | L.V. TOP ENDFRAME (TK WDT LEN ID OD DIM1) | 34647000323 | 004 | | | KG | 2935.000 | |
| | | | | 00001 | STEEL PART | 005 | MAIN FOOT ASSY (TK WDT LEN ID OD DIM1) | 34647000323 | 005 | | | KG | 277.600 | |
| | | | | 00001 | STEEL PART | 006 | YOKE CLAMP END TIE PLATE (TK WDT LEN ID OD DIM1) | 34647000323 | 006 | | | KG | 67.000 | |
| | | | | 00001 | STEEL PART | 007 | AUX TOP CROSS BEAM (LOCKING) (TK WDT LEN ID OD DIM1) | 34647000323 | 007 | | | KG | 148.720 | |
| | | | | 00001 | STEEL PART | 008 | MAIN TOP CROSS BEAM (TK WDT LEN ID OD DIM1) | 34647000323 | 008 | | | KG | 371.800 | |
| | | | | 00006 | L=1130, A=200 | 009 | TIE ROD M36 (TK WDT LEN ID OD DIM1) | 34997000027 | 005 | | | KG | 6.800 | |
| | | | | 00006 | L=1190 | 010 | TOP YOKE BOLT ASSY M36 (10KV) (TK WDT LEN ID OD DIM1) | 34997000027 | 06 | | | KG | 10.910 | |
| | | | | 00001 | STEEL PART | 011 | AUX FOOT ASSY (TK WDT LEN ID OD DIM1) | 34647000323 | 009 | | | KG | 199.480 | |
| | | | | 00001 | STEEL PART | 012 | LIFTING PIN ASSY AUX. (95 DIA) (TK WDT LEN ID OD DIM1) | 34647000323 | 010 | | | KG | 16.320 | |

| DISTRIBUTION DETAILS | | | | REV NO. 1 | PREP BY | CKD BY | APPD BY | DATE 20 OCT 2018 |
|---|---|---|---|---|---|---|---|---|
| TRM | TRX | TRE | | PREP BY | CKD BY | APPD BY | DATE | |
| 3 | 1 | 1 | | RP | LK | AKP | 13 AUG 2018 | DRG NO 14647000167 SHT 1 OF 5 |

| BILL OF MATERIAL | DEP NO | NO OF IT | NO OF VAR | TYPE OF PRODUCT | WORKORDER | DRG NO | CORE CODE | REV |
|---|---|---|---|---|---|---|---|---|
| | 406 | 60 | 0 | 500MVA 3PH AUTO TRF.UPPTC | 67038A51201 | 14647000167 | 65170700 | 01 |
| | | | | | TITLE: CORE AND END FRAME ASSY. TOP END FRAME H | | | SHT NO 2 OF 5 |

| DU | VAR03 | VAR02 | VAR01 | VAR00 | REMARKS | IT NO | DESCRIPTION / MAT SIZE | DRAWING NO / DETAILS | IT. | MATCODE / MAT SPEC | A/C | UT | UNIT WT / QTY | G/S / ZONE |
|---|---|---|---|---|---|---|---|---|---|---|---|---|---|---|
| | | | | 00001 | STEEL PART | 013 | LIFTING PIN ASY MAIN (110 DIA) | 34647000323 | 011 | | | KG | 29.600 | |
| | | | | 00004 | B.O SEE W.O | 014 | STEP PACKING(END. LEG) | 34647000287 | 001 | | | KG | 6.440 | |
| | | | | 00008 | B.O ,SEE W.O | 015 | STEP PACKING(MAIN FOOT) | 34647000288 | 001 | | | KG | 6.695 | |
| | | | | 00008 | B.O<br>SEE W.O | 016 | STEP PACKING(AUX. FOOT) | 34647000289 | 001 | | | KG | 5.860 | |
| | | | | 38500 | QTY.=38500 | 017 | CERAMIC SPACER | 34997000065 | 00 | | | | 0.001 | |
| | | | | 00004 | HV/LV SIDE | 018 | TOP MAIN YOKE INSULATION | 34647000326 | 02 | | | KG | 15.700 | |
| | | | | 00002 | HV/LV SIDE<br>LHS | 019 | TOP AUX YOKE INSULATION | 34647000326 | 00 | | | KG | 6.660 | |
| | | | | 00004 | HV/LV SIDE<br>LHS & R.H.S. | 020 | BOTTOM MAIN YOKE INSULATION | 34647000325 | 02 | | | KG | 10.440 | |
| | | | | 00002 | HV/LV SIDE<br>RHS | 021 | TOP AUX YOKE INSULATION | 34647000326 | 01 | | | KG | 6.660 | |
| | | | | 00006 | OMIT IT. 001 & 005 | 022 | YOKE BOLT ARRGT.M36 | 34577000010 | 00 | | | KG | 1.960 | |
| | | | | 00002 | HV/LV SIDE<br>PHENOLIC | 023 | CLAMP PLATE SEPARATOR MAIN | 34647000324 | 00 | | | KG | 18.880 | |
| | | | | 00003 | OMIT IT. 001<br>ITEM 007 LG.=212<br>HV SIDE | 024 | LIFTING PIN ASSY. (DIA 110)TOP | 24997000047 | 01 | | | | 4.080 | |

| DISTRIBUTION DETAILS | | | | REV NO. 1 | PREP BY | CKD BY | APPD BY | DATE 20 OCT 2018 |
|---|---|---|---|---|---|---|---|---|
| TRM | TRX | TRE | | PREP BY | CKD BY | APPD BY | DATE | |
| 3 | 1 | 1 | | RP | LK | AKP | 13 AUG 2018 | DRG NO 14647000167 SHT 2 OF 5 |

| BILL OF MATERIAL | DEP NO | NO OF IT | NO OF VAR | TYPE OF PRODUCT | WORKORDER | DRG NO | CORE CODE | REV |
|---|---|---|---|---|---|---|---|---|
| | 406 | 60 | 0 | 500MVA 3PH AUTO TRF.UPPTC | 67038A51201 | 14647000167 | 65170700 | 01 |
| | | | | | TITLE: CORE AND END FRAME ASSY. TOP END FRAME H | | | SHT NO 3 OF 5 |

| DU | VAR03 | VAR02 | VAR01 | VAR00 | REMARKS | IT NO | DESCRIPTION / MAT SIZE | DRAWING NO / DETAILS | IT. | MATCODE / MAT SPEC | A/C | UT | UNIT WT / QTY | G/S / ZONE |
|---|---|---|---|---|---|---|---|---|---|---|---|---|---|---|
| | | | | 00002 | T=110= (50+50+8+2 TK), W=230,W1=280 | 025 | INSULATION FOR AUX. CROSS BEAM<br>TK WDT LEN ID OD DIM1 | 34997000078 | 01 | | | KG | 10.590 | |
| | | | | 00012 | 19 TK X 50 I/D X 136 O/D<br>(P'BD)FOR YOKE BOLT | 026 | WASHER P'BD<br>TK WDT LEN ID OD DIM1 | 34527000071 | 008 | | | | 0.400 | |
| | | | | 00003 | OMIT IT. 001<br>ITEM 007 LG=127<br>LV SIDE | 027 | LIFTING PIN ASSY. (110 DIA)TOP<br>TK WDT LEN ID OD DIM1 | 24997000047 | 05 | | | KG | 4.080 | |
| | | | | 00005 | T=15(5//3TK),W=230,L=790, C=182, D=100 | 028 | TOP CROSS BEAM INSULATION<br>TK WDT LEN ID OD DIM1 | 44997000017 | 001 | | | KG | 2.610 | |
| | | | | 00002 | L=888,W=240,T=32(25+4+3) | 029 | END TIE PLATE INSULATION P'BD<br>TK WDT LEN ID OD DIM1 | 44997000043 | 002 | AA21108&09 | | KG | 2.990 | |
| | | | | 00004 | PHENOLIC | 030 | AUX. CLAMP PLATE SEPERATOR<br>TK WDT LEN ID OD DIM1 | 34647000324 | 01 | | | KG | 8.040 | |
| | | | | 00042 | Z.P.P. FOR CROSS BEAM MTG. | 031 | WASHER MCD SCB31 (4TK)<br>TK WDT LEN ID OD DIM1 | | | AA7161001110 | | | 0.052 | |
| | | | | 00012 | | 032 | EPOXY BUSH FOR YOKE BOLT<br>TK WDT LEN ID OD DIM1 | 44997000073 | 001 | BP9066059408 | | | 0.300 | |
| | | | | 00004 | L=780<br>USE 5//3 TK=15 tk. | 033 | FOOT INSULATION (MAIN)<br>TK WDT LEN ID OD DIM1 | 44997000044 | 01 | | | KG | 3.650 | |
| | | | | 00012 | 4TK X 50 I/D X 136 O/D<br>FOR YOKE BOLT | 034 | ROUND WASHER EPOXY<br>TK WDT LEN ID OD DIM1<br>4 | 34527000071 | 007 | | | | 0.064 | |
| | | | | 00006 | L=830,<br>FOR TIE ROD | 035 | EPOXY TUBE<br>TK WDT LEN ID OD DIM1 | | 001 | BP2241097080 | | KG | 0.143 | |
| | | | | 00024 | ZPP FOR END TIE ROD | 036 | HEX NUT M36<br>TK WDT LEN ID OD DIM1 | 34577000004 | 001 | | | KG | 0.300 | |

| DISTRIBUTION DETAILS | | | | REV NO. 1 | PREP BY | CKD BY | APPD BY | DATE 20 OCT 2018 |
|---|---|---|---|---|---|---|---|---|
| TRM | TRX | TRE | | PREP BY | CKD BY | APPD BY | DATE | |
| 3 | 1 | 1 | | RP | LK | AKP | 13 AUG 2018 | DRG NO 14647000167 SHT 3 OF 5 |

| BILL OF MATERIAL | DEP NO | NO OF IT | NO OF VAR | TYPE OF PRODUCT | WORKORDER | DRG NO | CORE CODE | REV |
|---|---|---|---|---|---|---|---|---|
| | 406 | 60 | 0 | 500MVA 3PH AUTO TRF.UPPTC | 67038A51201 | 14647000167 | 65170700 | 01 |
| | | | | | TITLE: CORE AND END FRAME ASSY. TOP END FRAME H | | | SHT NO 4 OF 5 |

| DU | VAR03 | VAR02 | VAR01 | VAR00 | REMARKS | IT NO | DESCRIPTION / MAT SIZE | TK | WDT | LEN | ID | OD | DIM1 | DRAWING NO / DETAILS | IT. | MATCODE / MAT SPEC | A/C | UT | UNIT WT / QTY | G/S / ZONE |
|---|---|---|---|---|---|---|---|---|---|---|---|---|---|---|---|---|---|---|---|---|
| | | | | 00064 | L=95(ZPP)<br>FOR FOOT MTG. | 037 | HEX SCRU.M24 | | | | | | | 44997000015 | 001 | | | KG | 0.400 | |
| | | | | 00064 | FOR FOOT MTG. | 038 | WASHER SPRING SCB 24 ST (5TK) | | | | | | | | | AA7164002100 | | KG | 0.026 | |
| | | | | 00004 | L=825<br>USE 5//3TK=15 TK | 039 | AUX FOOT INSULATION | | | | | | | 44997000044 | 01 | | | KG | 3.700 | |
| | | | | 00016 | ZPP<br>FOR END TIE PLATE | 040 | HEX SCRU PM12 | | | 50 | | | | TR20142S | 007 | BP9016052569 | | KG | 0.050 | |
| | | | | 00042 | ZPP<br>FOR CROSS BEAM MTG | 041 | HEX SCRU PM30 | | | 135 | | | | 44997000015 | 002 | | | KG | 0.500 | |
| | | | | 00042 | FOR CROSS BEAM MTG | 042 | WASHER SPRING SC B 30 ST (6TK) | | | | | | | | | AA7164002118 | | KG | 0.044 | |
| | | | | 00001 | QTY OF IT.002 REQD 004 NOS. | 043 | EARTHING & SHORTING OF CORE | | | | | | | 24997000051 | 03 | | | KG | 0.175 | |
| | | | | 00004 | OMIT IT. 012, IT.007 L=239<br>HV/LV SIDE | 044 | LIFTING PIN ASSY.(95DIA) TOP | | | | | | | 24997000047 | 05 | | | | 4.599 | |
| | | | | 00002 | HV/LV<br>LHS | 045 | BOTTOM AUX. YOKE INSULATION | | | | | | | 34647000325 | 00 | | | KG | 4.300 | |
| | | | | 00016 | HV/LV SIDE FOR END TIE PLATE | 046 | SPRING WASHER SCB 12 (2.5TK) | | | | | | | | | AA7164002070 | | | 0.004 | |
| | | | | 00002 | HV/LV<br>RHS | 047 | BOTTOM AUX. YOKE INSULATION | | | | | | | 34647000325 | 01 | | | KG | 4.300 | |
| | | | | 00001 | CUT TO SUIT, AS REQD. FOR TOP YOKE<br>INSULATION | 048 | SCRU ROD M12 EPOXY | | | 1000 | | | | TR20043S | 004 | BP9016046267 | | | 0.140 | |

| DISTRIBUTION DETAILS | | | | REV NO. 1 | PREP BY | CKD BY | APPD BY | DATE 20 OCT 2018 |
|---|---|---|---|---|---|---|---|---|
| TRM | TRX | TRE | | PREP BY | CKD BY | APPD BY | DATE | |
| 3 | 1 | 1 | | RP | LK | AKP | 13 AUG 2018 | DRG NO 14647000167 SHT 4 OF 5 |

| BILL OF MATERIAL | DEP NO | NO OF IT | NO OF VAR | TYPE OF PRODUCT | WORKORDER | DRG NO | CORE CODE | REV |
|---|---|---|---|---|---|---|---|---|
| | 406 | 60 | 0 | 500MVA 3PH AUTO TRF.UPPTC | 67038A51201 | 14647000167 | 65170700 | 01 |
| | | | | | TITLE: CORE AND END FRAME ASSY. TOP END FRAME H | | | SHT NO 5 OF 5 |

| DU | VAR03 | VAR02 | VAR01 | VAR00 | REMARKS | IT NO | DESCRIPTION / MAT SIZE | TK | WDT | LEN | ID | OD | DIM1 | DRAWING NO / DETAILS | IT. | MATCODE / MAT SPEC | A/C | UT | UNIT WT / QTY | G/S / ZONE |
|---|---|---|---|---|---|---|---|---|---|---|---|---|---|---|---|---|---|---|---|---|
| | | | | 00016 | | 049 | SQUARE NUT M12 EPOXY | | | | | | | TR20030N | 008 | ST604772 | | KG | 0.001 | |
| | | | | 00024 | FOR TIE ROD (TOP) | 050 | WASHER MCD 37 ST | | | | | | | | | AA7161001129 | | KG | 0.020 | |
| | | | | 00024 | FOR TIERODS | 051 | SPRING WASHER FOR M36 | | | | | | | | | AA7164002126 | | KG | 0.020 | |
| | | | | | SEE COMP. SHEETS, WT.=98952.3 | 052 | CORE ASSY | | | | | | | 34647000321 | 00 | | | KG | 98952.300 | |
| | | | | 00001 | AS REQD | 053 | KRAFT PAPER (TYPE-B) | 0.25 | 40 | | | | | | | AA2111617032 / AA21117 | | | 0.008 | |
| | | | | 00001 | INSERT IN SUIT. POS | 054 | SERIAL PLATE (0.8 X 50 X 50) | | | | | | | 44997000067 | 001 | ST600806 | | KG | 0.005 | |
| | | | | 00002 | HV/LV SIDE PHENOLIC | 055 | CLAMP PLATE SEPARATOR MAIN | | | | | | | 34647000324 | 02 | | | KG | 13.730 | |
| | | | | 00001 | | 056 | CORE TO COIL PACKING | | | | | | | 34647000322 | 00 | | | KG | 243.460 | |
| | | | | 00001 | AS REQD.1120 MTR. | 057 | RESIN GLASS TAPE | 0.3 | 40 | 1120 | | | | | | AA2571616013 / AA25716 | | KG | 12.000 | |
| | | | | 00002 | HV/LV SIDE PHENOLIC | 058 | CLAMP PLATE SEPARATOR MAIN | | | | | | | 34647000324 | 03 | | | KG | 13.730 | |
| | | | | 00001 | AS REQD. CUT TO SUIT ON ASSY. | 059 | NOMEX PAPER | 0.5 | 914 | | | | | | | AA2291501100 / 1122901 | | | | |

10459.

| DISTRIBUTION DETAILS | | | | REV NO. 1 | PREP BY | CKD BY | APPD BY | DATE 20 OCT 2018 |
|---|---|---|---|---|---|---|---|---|
| TRM | TRX | TRE | | PREP BY | CKD BY | APPD BY | DATE | |
| 3 | 1 | 1 | | RP | LK | AKP | 13 AUG 2018 | DRG NO 14647000167 / SHT 5 OF 5 |

FIRST ANGLE PROJECTION

(ALL DIMENSIONS ARE IN mm)

DRG.NO. 1 464 70 00167

THE INFORMATION ON THIS DOCUMENT IS THE PROPERTY OF BHARAT HEAVY ELECTRICALS LIMITED.
IT MUST NOT BE USED DIRECTLY OR INDIRECTLY IN ANY WAY DETRIMENTAL TO THE INTEREST OF THE COMPANY.

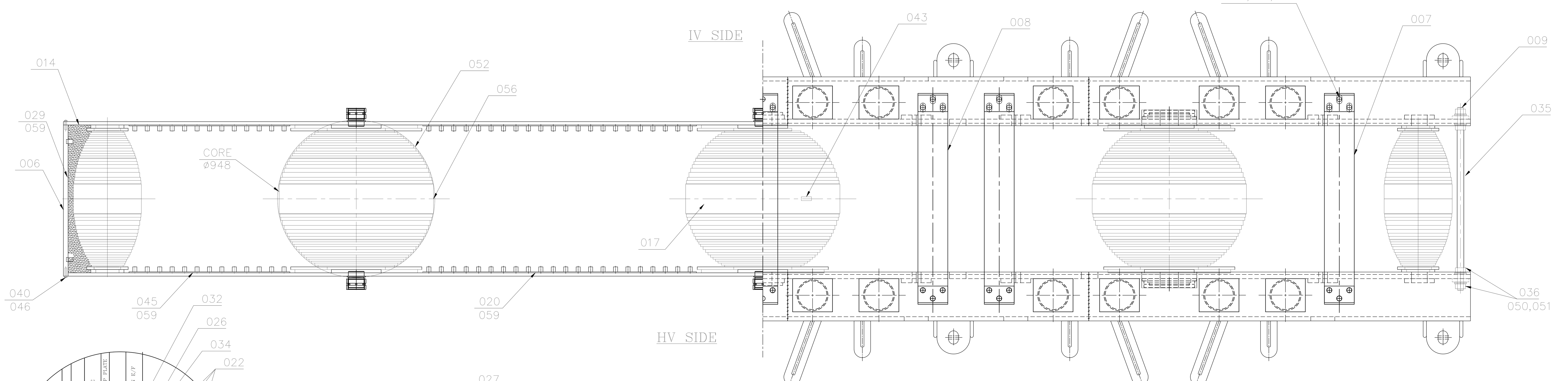


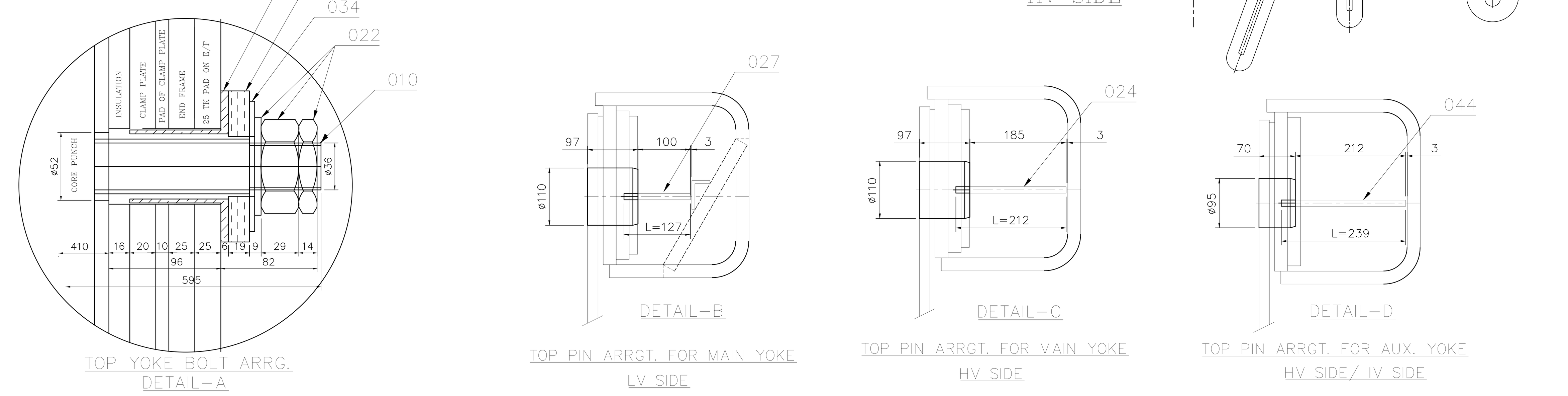


**NOTES:-**

01. FOR BOM REFER DRG NO. 1 464 70 00167.
02. AFTER ASSY. CORE IS TO BE TESTED BETWEEN CORE & END FRAME AND CORE & YOKE BOLT AS PER QA PLAN.
03. ALL STEEL PART ARE TO BE SHOT BLASTED AND PAINTED AS PER TRE SHEET TR 10005P SL.NO. 2(A)
04. ALL SHARP CORNERS TO BE ROUNDED OFF.
05. ALL HARDWARE TO BE CPP/ZPP AS PER TRE STD. SHEET TR10017P SL.N.O-3.
06. BEFORE PUTTING THE YOKE BOLTS THE INSIDE OF HOLES AND EDGES OF LAMINATIONS ARE TO BE VARNISH COATED WITH THE HELP OF BRUSH. THE VARNISH SHOULD BE SUFFIECIENTLY ENOUGH THIS IS FOR ASSURING NO DIFFUSION SHOLUD TAKE PLACE BETWEEN LAMINATIONS.
07. REMOVE THE PAINT CAREFULLY AT THE CONTACT OF EARTHING.
08. FOLLOWING TESTS ARE TO BE CONDUCTED AS PER QA PLAN IN ADDITION TO THE TESTS COVERED IN NOTE-2.
    (a) CORE TO END FRAME OF TRANSFORMER.
    (b) END FRAME TO COVER BEFORE SHIPMENT.
09. TIGHTENING TORQUE OF YOKE BOLT TO BE 65 KGM (MIN.).
10. ALL INSULATING PRESS BOARD ITEM TO BE OIL IMPREGNATED BEFORE TEST.
11. PRELIMINARY IRON LOSS TEST TO BE CONDUCTED IN FIRST UNIT.
12. TOTAL CORE PRESSING FORCE TO BE APPLIED BEFORE LIFTING - 350 T.
13. USE STEEL BAND 25 NOS. ON MAIN LIMB ALONG WITH 10 NOS. OF GREEN BELT OF CAPACITY 5 T EACH.(SIZE OF BAND =0.8TK X 32W) BEFORE LIFTING THE CORE.
14. USE STEEL BAND 12 NOS. ON AUX. LIMB ALONG WITH 5 NOS. OF GREEN BELT OF CAPACITY 5 T EACH. (SIZE OF BAND =0.8TK X 32W) BEFORE LIFTING THE CORE.

WEIGHT CHART

| MATERIAL NAME | WT. (in kg) |
|---|---|
| C.R.G.O STEEL | 98952.30 |
| H.T.S | 9478.20 |
| STEEL | 153.32 |
| PRESS BOARD | 59.58 |
| UDL WOOD | 369.66 |
| EPOXY | 3.60 |
| RESIGLASS TAPE | 12.00 |
| PHENOLIC SHHET | 293.84 |
| CERAMIC | 38.50 |
| OTHERS | 70.00 |
| TOTAL WT. (except core) | 10478.70 |

ADDITIONAL INFORMATION
W.O. 67038-A-512-01

STATUS OF DRAWING 'U'

DISTRIBUTION OF PRINTS
TRE-1
TRM-3 FTM-6

| REV | DATE | | |
|---|---|---|---|
| 01 | 20.10.18 | ALTERED | RP |
| | | CHECKED | LK |
| | | APPROVED | LK |

ZONE: (i) IT.055 AND IT. 058 ADDED. (ii) QTY. OF IT. 023 WAS 6.

उत्पाद का प्रकार या ग्राहक /परियोजना का नाम
TYPE OF PRODUCT OR NAME OF CUSTOMER/PROJECT: 500 MVA,400/220/33KV,3 PH. AUTO TRANSFORMER M/S UPPTCL

भारत हेवी इलेक्ट्रिकल्स लिमिटेड भोपाल
BHARAT HEAVY ELECTRICALS LTD. BHOPAL

| | नाम NAME | हस्ता.SIGN | दि. DATE | वेरि की संख्या NO.OF VAR |
|---|---|---|---|---|
| बनाया DRN | RP | [signature] | 13.08.18 | |
| जांचा CHD | LK | [signature] | 13.08.18 | – |
| स्वीकृत APPD | NM/AD | -SD- | 13.08.18 | |

विभाग टीआरई DEPT TRE; कोड CODE 406

SCALE अनुपात NTS

भार कि.ग्रा. WEIGHT(kg) SEE TABLE

असे. ड्राइंग का संदर्भ REF TO ASSY DRG

मद कं. ITEM NO.

मद संख्या NO.OF ITEM –

शीर्षक /TITLE
CORE & END FRAME ASSY.

DRAWING NO. 1 464 70 00167

पुन. REV 01

पृष्ठ क.SHT NO. 01 NO.OF SHT.01

REF.DRG.NO. 1 464 70 00159

| BILL OF MATERIAL | DEP NO | NO OF IT | NO OF VAR | TYPE OF PRODUCT | WORKORDER | DRG NO | CORE CODE | REV |
|---|---|---|---|---|---|---|---|---|
| | 0 | 2 | 1 | | | 34997000047 | 65170706 | 04 |
| | | | | | TITLE: MAIN TOP CROSS BEAM | MAIN, TOP CROSS | | SHT NO 1 OF 1 |

| DU | VAR03 | VAR02 | VAR01 | VAR00 | REMARKS | IT NO | DESCRIPTION / MAT SIZE | DRAWING NO / DETAILS | IT. / VAR | MATCODE / MAT SPEC | A/C | UT | UNIT WT / QTY | G/S / ZONE |
|---|---|---|---|---|---|---|---|---|---|---|---|---|---|---|
| | | | 00001 | 00001 | SEE NOTE 4<br>25 TK X 180 X L | 001 | PLATE<br>TK WDT LEN ID OD DIM1 | | 000<br>00 | AA1011819155<br>AA10119 | | | 0.000 | |
| | | | 00002 | 00002 | M12 X 50 | 002 | STEEL STUD<br>TK WDT LEN ID OD DIM1 | TR20048S | 230<br>00 | | | | 0.045 | |

.09 .09

| DISTRIBUTION DETAILS | | | | | | REV NO. 4 | PREP BY | CKD BY | APPD BY | DATE |
|---|---|---|---|---|---|---|---|---|---|---|
| TRM | TRX | QC | FTM | TRE | | PREP BY | CKD BY | APPD BY | DATE | |
| 3 | 1 | 0 | 0 | 1 | | YGV | SKJ | SKJ | | DRG NO 34997000047 SHT 1 OF 1 |

FIRST ANGLE PROJECTION

(ALL DIMENSIONS ARE IN mm)

THE INFORMATION ON THIS DOCUMENT IS THE PROPERTY OF BHARAT HEAVY ELECTRICALS LIMITED IT MUST NOT BE USED DIRECTLY OR INDIRECTLY IN ANY WAY DETRIMENTAL TO THE INTEREST OF THE COMPANY

DRG. NO. 3 499 70 00047

3499 7000047

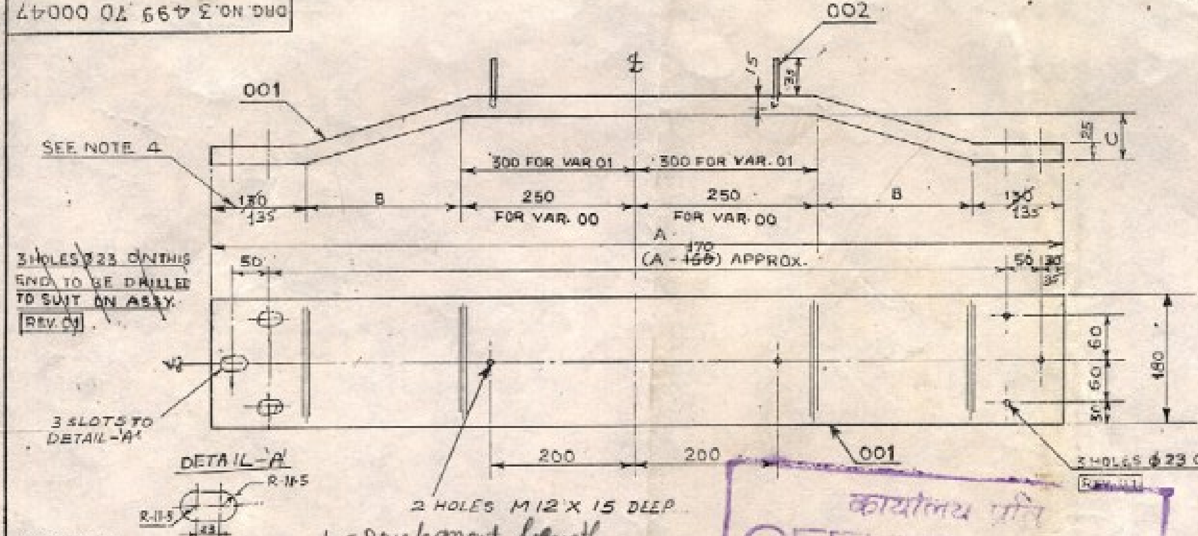


L = Development length

NOTES :-

1. GIVE DIMS. A, B, C & L. VAR.00/01 ON ASSY. DRG.
2. ALL STEEL PARTS ARE TO BE SHOT BLASTED AND PAINTED AS PER STD. SHT. TR10005P SL. NO 2.
3.1. WT IN Kg = 0.035 X L IN M.M.
3.2. SURFACE AREA = [.009 + C.00041 X L] $M^2$
4. BENDING ALLOWANCE IN LENGH. IS TO BE ADDED WHICH IS TO BE CUT AFTER BENDING.
5. ALTERNATELY, STEEL PLATE TO AA 10108 CAN BE USED IN PLACE OF AA 10119.

| VAR 01 | VAR 00 | REMARKS | ITEM NO | DESCRIPTION | STD. | DRAWING NO. | IT. NO / VAR. | MATL. CODE / MATL. SPECN. | UNIT | UNIT WT / QTY |
|---|---|---|---|---|---|---|---|---|---|---|
| 002 | 002 | | 002 | STEEL STUD M12 X L = 50 | | TR 20049 S | 23 | - | KG | 0.045 |
| 001 | 001 | SEE NOTE 4 | 001 | PLATE 25 TK X 180 X L | | | | AA 10118/19/55 / AA 10119 | KG | 0.035 XL |

CARD TYPE-3 — CARD TYPE-1 — CARD TYPE-2

ADDITIONAL INFORMATION: STD

STATUS OF DRAWING: U

DISTRIBUTION OF PRINTS

| TRE | TRM | TRX | FTM |
|---|---|---|---|
| 1 | 3 | 1 | 6 |

TYPE OF PRODUCT OR NAME OF CUSTOMER/PROJECT: TRANSFORMER

BHARAT HEAVY ELECTRICALS LIMITED BHOPAL

| | NAME | SIGN. | DATE |
|---|---|---|---|
| DRN | R.H.T. | | |
| CHD. | H.N.N. | | 17-1-85 |
| APPD | | | 19-1-85 |

NO. OF VAR: 2

DEPT: TRE | CODE: 406 | GRADE OF UN-TOL. DIM. Q/MIT | SCALE: NTS | WEIGHT (Kg): SEE NOTE 3.1 | REF. TO ASSY. DRG.: —

TITLE: MAIN TOP CROSS BEAM

CARD CODE

DRAWING NO. 3 499 70 00047 04

SHEET NO. 01 NO. OF SHEETS 01

| REV | DATE | ALTERED / CHECKED | DESCRIPTION |
|---|---|---|---|
| 04 | 21-11-95 | | IN IT. 001 2 HOLES M12 X 15 DEEP ADDED. IT. 002 WAS STUD ATOWLD PW80 M12 X 35 ST. TO AA 71410/1106, NOTE 2 MODIFIED. NOTE 5 ADDED |
| 03 | 5-4-95 | | 3 NO. SLOTS TO DETAIL-'A' ADDED, AT ONE END. DIM 170, 135, 135 & 35 WERE 160, 160, 130 & 30 Respectively. ON SHOP REQUEST. |
| 02 | 29-6-89 | J.S. | DRG. RE TRACED VAR. 01 ADDED |

INVENTORY NO. | SIGN. & DATE | REF. DRG. NO.

कार्यालय प्रति OFFICE COPY

| BILL OF MATERIAL | DEP NO | NO OF IT | NO OF VAR | TYPE OF PRODUCT | WORKORDER | DRG NO | CORE CODE | REV |
|---|---|---|---|---|---|---|---|---|
| | | | | | STD | 34997000080 | 65170706 | 02 |
| | 406 | 4 | 2 | STD | TITLE<br>TOP CROSS BEAM FOR LOCKING (480 MAIN, TOP CROSS | | | SHT NO 1 OF 1 |

| DU | VAR03 | VAR02 | VAR01 | VAR00 | REMARKS | IT NO | DESCRIPTION / MAT SIZE | DRAWING NO / DETAILS | IT. / VAR | MATCODE / MAT SPEC | A/C | UT | UNIT WT / QTY | G/S / ZONE |
|---|---|---|---|---|---|---|---|---|---|---|---|---|---|---|
| | | | | 00001 | TO DETAIL<br>L=LG | 001 | CROSS BEAM ( M.S )<br>TK WDT LEN ID OD DIM1<br>20 180 | | | AA1011808137<br>AA10108 | | | | |
| | | | 00001 | 00001 | TO DETAIL<br>M/C TO 53 M.M | 002 | PLATE<br>TK WDT LEN ID OD DIM1<br>63 220 220 | | | AA1011808234<br>AA10108 | | KG | 16.200 | |
| | | | 00001 | 00001 | TO DETAIL | 003 | BOLT (M 110 X 58)<br>TK WDT LEN ID OD DIM1 | | | AA10501 | | KG | 18.500 | |
| | | | 00001 | | TO DETAIL<br>L = LG | 004 | CROSS BEAM HTS<br>TK WDT LEN ID OD DIM1<br>20 180 | | | AA1011822130<br>AA10122 | | | | |

34.7 34.7

| DISTRIBUTION DETAILS | | | | REV NO. 2 | PREP BY | CKD BY | APPD BY | DATE 27 OCT 2010 |
|---|---|---|---|---|---|---|---|---|
| TRE | TRM | TRX | FTM | PREP BY | CKD BY | APPD BY | DATE | |
| 1 | 3 | 1 | 6 | | | SKM | 24 OCT 2001 | DRG NO 34997000080 SHT 1 OF 1 |

FIRST ANGLE PROJECTION

(ALL DIMENSIONS ARE IN mm)

THE INFORMATION ON THIS DOCUMENT IS THE PROPERTY OF BHARAT HEAVY ELECTRICALS LIMITED. IT MUST NOT BE USED DIRECTLY OR INDIRECTLY IN ANY WAY DETRIMENTAL TO THE INTEREST OF THE COMPANY.

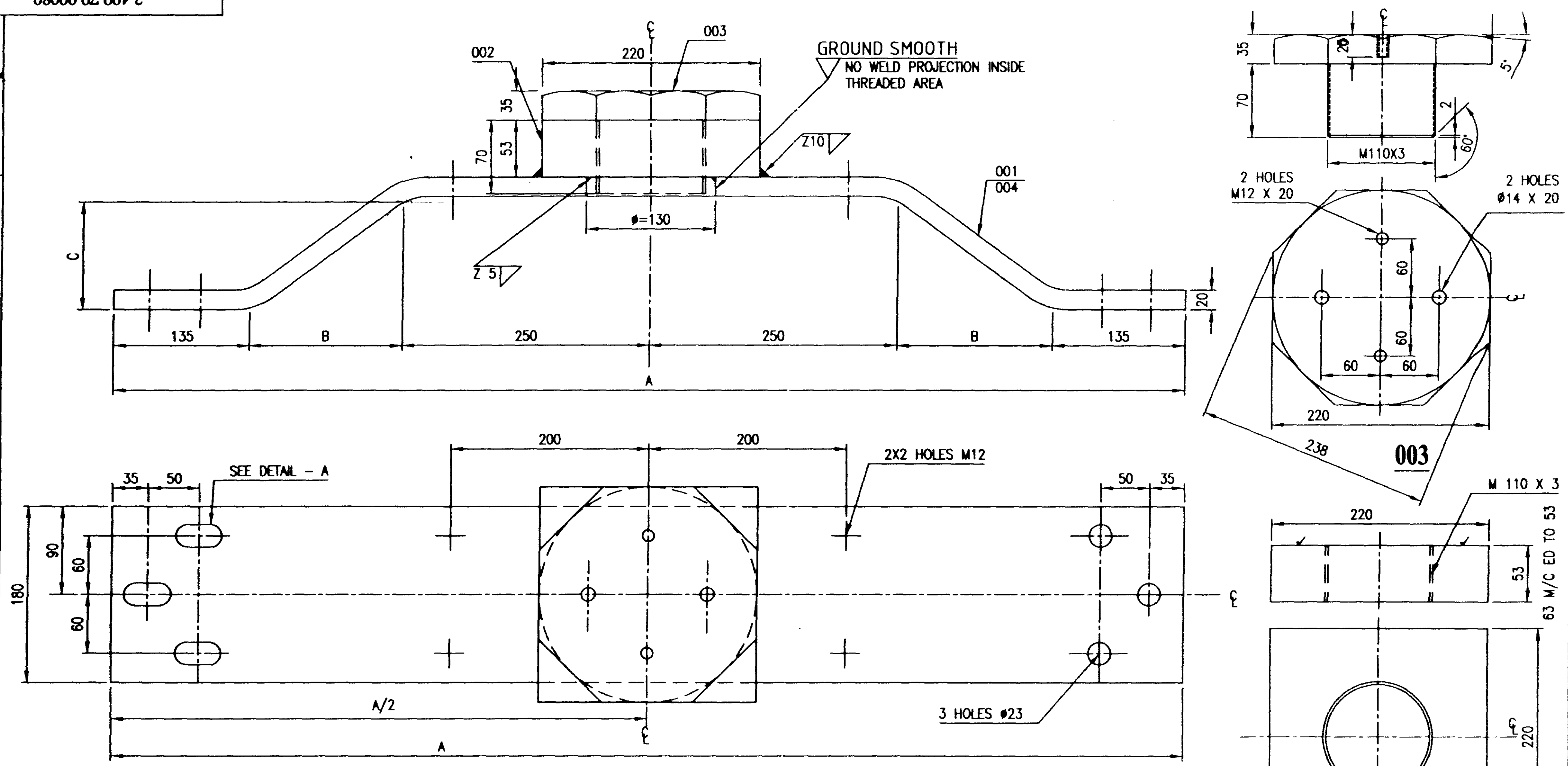


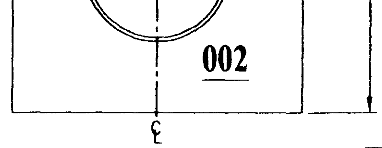

002

NOTE TO D/MAN :-

1. GIVE DIMS. A, B, C, & L ON ASSY. DRG.
2. DIMS A SHOULD BE 770+2C ( MIN )
3. ALL STEEL PARTS ARE TO BE SHOT BLASTED AND PAINTED AS PER MID/WORK ORDER.
4. VAR. 00 FOR BLK STEEL & VAR 01 FOR HTS.
5. FOR DELIINKED BOM REFER DRG. NO . BOM 3 499 70 00080.
6. WEIGHT OF IT. 001 IS [ 0.028296 X L -2 ] KG.
   WT OF VAR 00 OR 01 = [34.7+(0.028 X L )-2 ] KG.

NOTE TO SHOP :-

1. DRILL & TAP OF M110 ON ITEM 002 SHALL BE DONE BEFORE WELDING TO ITEM 001/004
2. MATCHING & MOVEMENT OF THREADS OF ITEM 002 & 003 TO BE ENSURED
3. ALL SHARP CORNERS TO BE ROUNDED OFF.
4. FOR ASSY REFER DRG NO 24991600002 / 34991900029

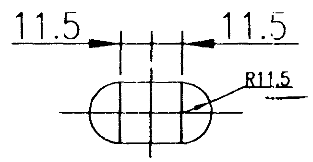


DETAIL - A

| REV | DATE | ALTERED / CHECKED / APPROVED | | REV | DATE | ALTERED / CHECKED / APPROVED | | REV. | DATE | ALTERED / CHECKED / APPROVED | |
|---|---|---|---|---|---|---|---|---|---|---|---|
| | | | | 02 | 25/10/10 | S.K.G. / A.D. / S.C.B. | | 01 | 17-01-2003 | G.P.D. / A.D. / S.C.B. | Sd/- |
| ZONE | | | | | | ITEM 2 MODIFIED & ITEM 3 ADDED. | | | | DRG.COMPUTERISED, IT. 002,003 MODIFIED. | |

ADDITIONAL INFORMATION STANDARD

STATUS OF DRAWING: 'U'

DISTRIBUTION OF PRINTS

| TRE | TRM | TRX |
|---|---|---|
| 1 | 3 | 1 |

उत्पाद का प्रकार या ग्राहक / परियोजना का नाम
TYPE OF PRODUCT OR NAME OF CUSTOMER/PROJECT: TRANSFORMER

भारत हेवी इलेक्ट्रिकल्स लिमिटेड भोपाल
BHARAT HEAVY ELECTRICALS LTD. BHOPAL

| | नाम NAME | हस्ताक्षर SIGN | दि. DATE |
|---|---|---|---|
| DRN | O.PAL | Sd/- | 22.02.93 |
| CHD | T.R.SURI | Sd/- | 22.02.93 |
| APPD | B.S.BONDE | Sd/- | 22.02.93 |

DEPT: TRE

SCALE अनुपात: NTS.

REF TO ASSY DRG: 2 499 70 00021 — ITEM NO.: 001 — 003

शीर्षक/TITLE: TOP LOCKING BEAM ASSY.

DRAWING NO. 3 499 70 000 80 — REV 02

# MASTER GENERAL ASSEMBLY

BHEL, Bhopal Transformer Engg. Department

View MGES Detail

| | | | | | | | |
|---|---|---|---|---|---|---|---|
| W. O. No. | 67038F51208 | Year Code: | 2017 | MGES_No: | 14649904277 | MID NO: | 406410004 |
| Customer: | M/S UPPTCL | Rating: | 500MVA 400/220/33KV 3-PHASE ICT NOIDA | Prod_GR: | 464 | QA_NO: | |
| Elec. Spec. | 6010411 | Trfr_Sl_Nos | 6007811 | | | No_Units | 1 |
| Design Group | SHRI AKSHAY DAVE | Elec. DO | SHRI LALIT KUMAR | Mech.DO | SHRI SAURABH CHAUHAN | Ent Dt : | 10/15/2020 |

>> Engg PI List >> Engg Status >> Engg.PI. >> Imported Engg.PI. >> GSOS PI. >> All.PI. >> MBox Shiplist >> DCA Between Dates

CTSO Mechanical Test Instructions Tap Changer Data Cooler Control Cabinet Data

**Manufacturing Plan :** 6007811

**Shipping List :** 6007811

| Sl. No. | Description | Drg. no. | Rev No. | Var. No | Qty | Issue dt. | Choose | Remarks | Trm_dt | Docket |
|---|---|---|---|---|---|---|---|---|---|---|
| 1 | CORE AND END FRAME ASSY | 14647000167 | 01 | 00 | 1 | 4/23/2021 | Y | OMIT ITEMS ALREADY COVERED IN DRG. 34647000323 CALLED AT SL NO. 03 | | 1 |
| 2 | CORE LAMINATION | 34647000321 | 02 | 00 | 1 | 4/23/2021 | Y | GRADE-ZDKH90/0.27 | | |
| 3 | CORE STEEL PARTS | 34647000323 | 00 | 00 | 1 | 4/23/2021 | Y | | | |
| 5 | ADDITIONAL DRILLING ON E/F TOP | 24647000092 | 00 | 00 | 1 | 4/23/2021 | Y | | | |
| 6 | COIL ASSY | 04647700136 | 03 | 00 | 3 | 4/23/2021 | Y | | | 1 |
| 7 | LV WINDING ASSY | 24647200049 | 02 | 00 | 3 | 4/23/2021 | Y | | | 1 |
| 8 | HV WINDING ASSY | 24647400035 | 01 | 00 | 3 | 4/23/2021 | Y | | | 1 |
| 10 | TAPPING WINDING ASSY | 24647500037 | 03 | 00 | 3 | 4/23/2021 | Y | | | 1 |
| 14 | COMMON WINDING | 24647300112 | 03 | 00 | 3 | 4/23/2021 | Y | | | 1 |
| 15 | INSIDE FITTINGS | 04648100108 | 00 | 00 | 1 | 4/23/2021 | Y | | | 1 |
| 17 | HV T.G. ASSY | 14648200037 | 01 | 00 | 1 | 4/23/2021 | Y | | | 1 |
| 18 | TAPPING T.G. ASSY | 04648300090 | 02 | 03 | 1 | 4/23/2021 | Y | var 03 is for all three phASES | | 1 |
| 19 | TERTIARY T.G. ASSY | 04648300089 | 00 | 00 | 1 | 4/23/2021 | Y | | | 1 |
| 21 | OUTSIDE SIDE FITTINGS | 14641900276 | 01 | 00 | 1 | 4/23/2021 | Y | | | |
| 22 | SET OF GASKET FOR TREATMENT | 34645000073 | 00 | 02 | 1 | 4/23/2021 | Y | | | |
| 23 | SET OF GASKET FOR ERECTION | 34645000073 | 00 | 01 | 1 | 4/23/2021 | Y | | | |
| 24 | SET OF GASKET FOR HEAT RUN | 34645000073 | 00 | 03 | 1 | 4/23/2021 | Y | | | |
| 25 | WIRING SYSTEM | 14646500030 | 00 | 00 | 1 | 4/23/2021 | Y | | | |
| 26 | TANK ASSY | 24641600103 | 03 | 00 | 1 | 4/23/2021 | Y | | | |
| 31 | BOTTOM TANK ASSY | 14641700061 | 03 | 00 | 1 | 12/30/2021 | Y | | | |
| 33 | ADDITIONAL PAD WELDING | 34641700106 | 01 | 00 | 1 | 3/14/2022 | Y | additional pad welding for bottom tank | | |
| 34 | HV TURRET ASSY. U PHASE | 34642100102 | 01 | 00 | 1 | 12/30/2021 | Y | | | |

| | | | | | | | | |
|---|---|---|---|---|---|---|---|---|
| 35 | HV TURRET ASSY. V PHASE | 34642100104 | 01 | 00 | 1 | 12/30/2021 | Y | |
| 36 | HV TURRET ASSY. W PHASE | 34642100103 | 01 | 00 | 1 | 12/30/2021 | Y | |
| 38 | IV TURRET ASSY. U PHASE | 34642400076 | 01 | 00 | 3 | 12/30/2021 | Y | |
| 47 | CT MTG IN HV TURRET U PH | 34642100105 | 00 | 00 | 2 | 3/14/2022 | Y | FOR U & W PHASE |
| 48 | CT MTG IN HV TURRET V PH | 34642100105 | 00 | 00 | 1 | 3/14/2022 | Y | FOR V PHASE |
| 50 | CT MTG IN HV TURRET HVN PH | 14648100168 | 01 | 00 | 1 | 3/14/2022 | Y | TANK MOUNTING CT |
| 51 | BLANKING I | 34648800259 | 00 | 0 | 1 | 12/30/2021 | Y | |
| 54 | HEADER PIPE WORK SYSTEM | 14644300041 | 01 | 00 | 1 | 12/30/2021 | Y | |
| 56 | MAIN CONS. P/W. SYSTEM | 14645100060 | 03 | 00 | 1 | 12/30/2021 | Y | |
| 57 | AUX. P/W. SYSTEM | 14645300006 | 00 | 00 | 1 | 12/30/2021 | Y | |
| 58 | RADIATOR/COOLER | 44644300060 | 00 | 00 | 1 | 3/14/2022 | Y | 32-9-28-3500 VC |
| 59 | BLANKING II | 34648800260 | 00 | 00 | 1 | 12/30/2021 | Y | |
| 79 | MAIN CONSERVATOR | 34643900078 | 00 | 0 | 1 | 12/30/2021 | Y | |
| 80 | CT MTG IN IV TURRET U PH | 34642400077 | 00 | 00 | 3 | 3/14/2022 | Y | |
| 88 | INSIDE FITTING (WALL SHUNT ASSY) | 34641600159 | 04 | 0 | 1 | 1/6/2022 | Y | |
| 112 | PAINTING DETAILS FOR TANK,E/F ASSY AND ACCESSORIES | TR10005P | 21 | 00 | 1 | 3/14/2022 | Y | SL NO. 22, PAINT SHADE 631 OF IS5 |
| 131 | FIBRE OPTIC SYSTEM | 44640000136 | 00 | 00 | 1 | 3/14/2022 | Y | FIBRE OPTIC LOCATION |

FIRST ANGLE PROJECTION

(ALL DIMENSIONS ARE IN mm)

DRG.NO. 34997000093

NOTES:-

1- BEFORE SHIPPING CORE CLAMPING STRUCTURE FROM FTM/ANCILLARY INSPECTION SHOULD BE DONE TO MAKE SURE THAT THE OVERALL DIMENSIONS ARE NOT EXCEEDING THE DIMENSIONS GIVEN ON ASSEMBLY.
2- FOR WELDING DETAILS REFER DRG.34997000095. ALL OTHER WELDS TO BE Z8◺ CONTINUOUS UNLESS OTHERWISE SPECIFIED.
3- BUTT WELD IF PROVIDED IN DRAWING TO BE TESTED BY ULTRASONIC TESTING AS PER BP0850176 AND ACCEPTANCE TO BE DONE AS PER AA622101,GRADE-3 AND ALL OTHER WELD TO BE DP TESTED.
4- TOLERANCE IN CLAMPING STRUCTURE IS AS PER TR10199T AND TR10190T.
5. SLOTS GIVEN IN CORE CLAMP PLATE IS TO BE DONE BY MACHINING PROCESS ONLY (WATER JET , MILLING OPERATION ETC) .
6- SHARP EDGES SHOULD BE REMOVED PROPERLY. MINIMUM RADIUS OF CHAMFERING TO BE R3.
7- ALL THE HOLES IN THE CLAMP PLATE AND END FRAME MUST BE DONE BY BORING PROCESS ONLY. FLAME CUT IS NOT ALLOWED.
8- DURING MATCHING OF CLAMPING STRUCTURE,CLAMP PLATE AND END FRAME SHOULD HAVE COMPLETE SURFACE CONTACT AT PIN POSITION.
9- INSIDE AREA OF HOLE IN CLAMP PLATE FOR LOCKING PIN IS NOT TO BE PAINTED..
10-ALL PLATES EQUAL TO 16 MM THICKNESS AND ABOVE SHALL BE ULTRASONIC TESTED AS PER BHEL SPEC. AA0850120/ASTMA435 . FABRICATOR HAS TO PRODUCE CO-RELATED TEST CERTIFICATE FROM MILL OR TO CARRY OUT UT TEST AT THEIR WORKS BY BHEL APPROVED NDT AGENCY. BHEL/TPIA SHALL RECORD REVIEW THE TEST CERTIFICATES.
11- DIMENSION OF PIN PAD ASSEMBLY SHOULD BE MEASURED AND CHECKED. APPROVAL FROM TRE IS REQUIRED.
12- CLAMPING STRUCTURE AND END FRAME TO BE PAINTED AS PER TR10005P SERIAL NO. 22 CALLED ON RESPECTIVE DRAWING/WORK ORDER. ADHESION OF PAINT IS VERY CRITICAL AND SHALL BE CHECKED & WITNESSED BY QIX/TPIA.
13- SIZE OF PLATE MENTIONED IN BOM FOR DEVELOPED LENGTH OF ROLLED AND BEND ITEMS ARE BASED ON MEAN DIMENSIONS. FTM TO NOTE THAT BENDING AND ROLLING ALLOWANCES ARE TO BE ADDED IF REQUIRED.
14. FOR CUT OUTS ON END FRAME AND CLAMPING STRUCTURE, REFER RESPECTIVE DETAIL DRAWING.
15- MATERIAL TO AA10119 MAY BE USED AS AN ALTERNATE TO AA10108 AND VICE VERSA FOR MS PLATES.
16- CRITICAL DIMENSIONS MARKED AS (CR) ON THE DRAWINGS ARE IMPORTANT AND ARE TO BE ENSURED BY QC.
17- EARTHING PAD TOP FACE SHOULD NOT BE PAINTED DURING PAINTING OF END FRAME AND CLAMPING STRUCTURE.
18- MATERIAL TO SPEC AA10740 CAN BE USED AS AN ALTERNATIVE TO AA10739 AND VICE VERSA FOR STAINLESS STEEL PARTS.
19- FOR INSPECTION OF END FRAME CHECKLIST QC/TCB/EF/01 & QC/TCB/EF/02 AND ANY SPECIFIED CHECKLIST APPLICABLE FOR END FRAME SHALL BE FOLLOWED.
20. ALL OTHER ITEMS WHICH ARE UNAPPROACHABLE AFTER ASSEMBLY LIKE DASHPOT GUIDE ETC. SHALL BE NECESSARILY SHOT BLASTED BEFORE ASSEMBLY.
21. THREAD OF THE PIN WELDED ON HV AND LV SIDE OF CLAMP PLATE SHOULD MATCH WITH RESPECTIVE NUT.IT SHOULD BE CHECKED.
22. THREAD OF DASHPOT GUIDE SHOULD MATCH WITH RESPECTIVE LOCKING NUT. IT SHOULD BE CHECKED.
23. FOR HTS PLATE MATERIAL TO SPEC AA1022 , WHEREVER CALLED IN THE DRAWING SHOULD BE AS PER IS2062 GRADE E350 (ALL QUALITY VIZ. A, BR, B0, C ARE ACCEPTABLE).

THE INFORMATION ON THIS DOCUMENT IS THE PROPERTY OF BHARAT HEAVY ELECTRICALS LIMITED.
IT MUST NOT BE USED DIRECTLY OR INDIRECTLY IN ANY WAY DETRIMENTAL TO THE INTEREST OF THE COMPANY.

REF.DRG.NO.

SIGN.DATE

| REV | DATE | | | | REV | DATE | | | | REV | DATE | | | |
|---|---|---|---|---|---|---|---|---|---|---|---|---|---|---|
| 03 | 29/03/22 | ALTERED | KDS | | 02 | 12/04/17 | ALTERED | NKM | | 01 | 08/04/16 | ALTERED | NiTiN | |
| | | CHECKED | NKM | | | | CHECKED | A.D | | | | CHECKED | A.D | |
| | | APPROVED | NKM | | | | APPROVED | A.D | | | | APPROVED | A.D | |
| ZONE | NOTE NO. 23 ADDED. | | | | ZONE | NOTE NO. 03 MODIFIED. | | | | ZONE | NOTE NO. 010 MODIFIED. | | | |

ADDITIONAL INFORMATION: STANDARD

STATUS OF DRAWING: U

DISTRIBUTION OF PRINTS

| TRE | TRX | TRM | FTM | QC |
|---|---|---|---|---|
| 1 | 1 | 3 | 6 | 1 |

TYPE OF PRODUCT OR NAME OF CUSTOMER/PROJECT: TRANSFORMER/REACTOR

BHARAT HEAVY ELECTRICALS LTD. BHOPAL

| | NAME | SIGN | DATE |
|---|---|---|---|
| DRN | NM | –SD– | 15.03.16 |
| CHD | AKD | | |
| APPD | AKD | –SD– | 05.03.16 |

NO.OF VAR: –

DEPT TRE

CODE 406

SCALE: –

WEIGHT(kg): –

REF TO ASSY DRG: –

ITEM NO.: –

NO.OF ITEM

/TITLE

NOTES FOR CORE CLAMPING STRUCTURE

DRAWING NO. 34997000093

REV 03

SHT NO.

NO.OF SHT.

FIRST ANGLE PROJECTION

(ALL DIMENSIONS ARE IN mm)

DRG.NO. 34997000095

THE INFORMATION ON THIS DOCUMENT IS THE PROPERTY OF BHARAT HEAVY ELECTRICALS LIMITED.
IT MUST NOT BE USED DIRECTLY OR INDIRECTLY IN ANY WAY DETRIMENTAL TO THE INTEREST OF THE COMPANY.

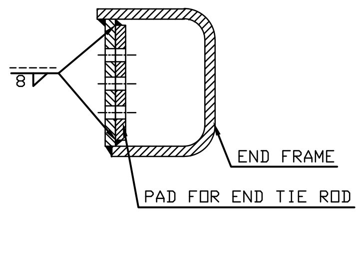


1. **WELDING BETWEEN END FRAME &PAD FOR END TIE ROD**

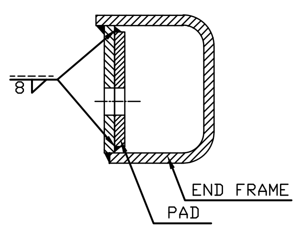


2. **WELDING BETWEEN END FRAME & PAD FOR GUIDE PIN**

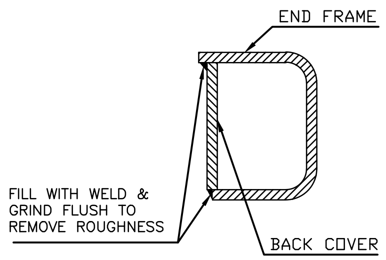


3. **WELDING OF END FRAME PART & BACK COVER**

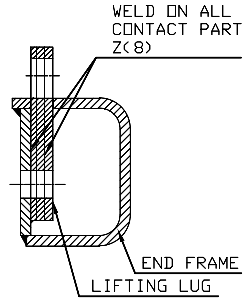


4. **WELDING BETWEEN END FRAME & LIFTING LUG**

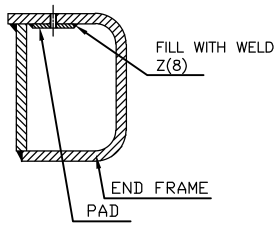


5. **WELDING BETWEEN END FRAME & PAD FOR CROSS/LOCKING BEAM**

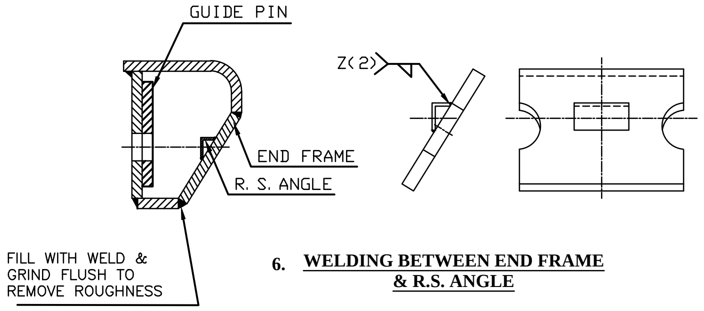


6. **WELDING BETWEEN END FRAME & R.S. ANGLE**

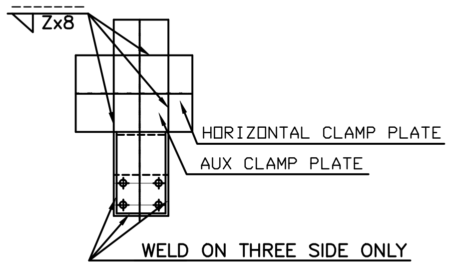


7. **WELDING BETWEEN HORIZONTAL CLAMP PLATE & AUX CLAMP PLATE**

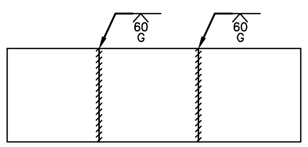


8. **WELDING BETWEEN PLATE OF END FRAME**

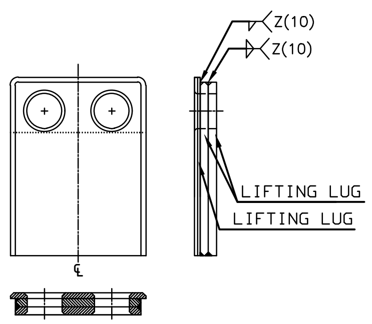


9. **WELDING BETWEEN LIFTING LUG**

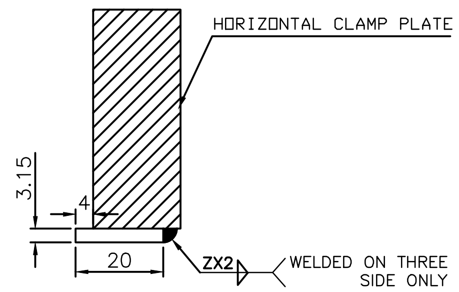


10. **WELDING BETWEEN HORIZONTAL CLAMP PLATE & INSULATION SUPPORT PLATE**

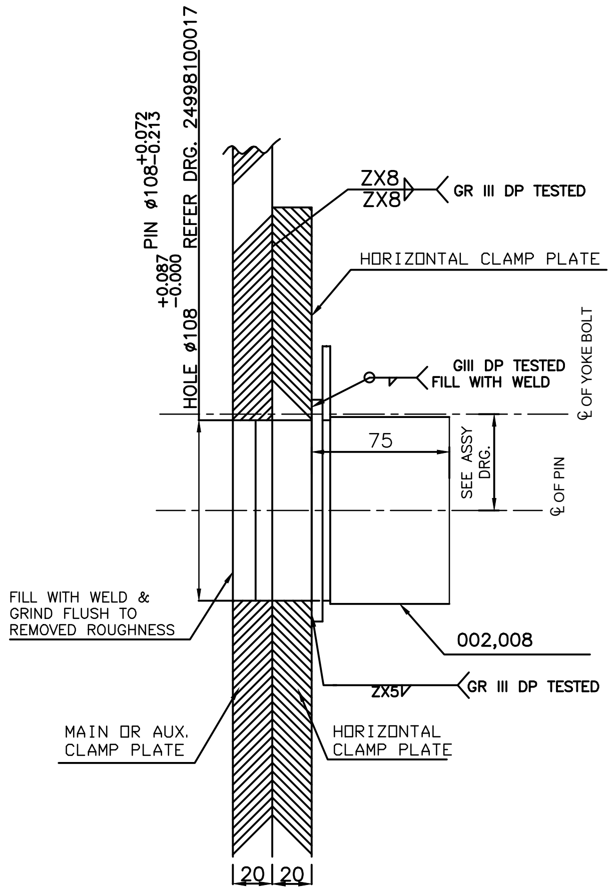


**VIEW PIN**

14. **WELDING BETWEEN CLAMP PLATE & LOCKING PIN**

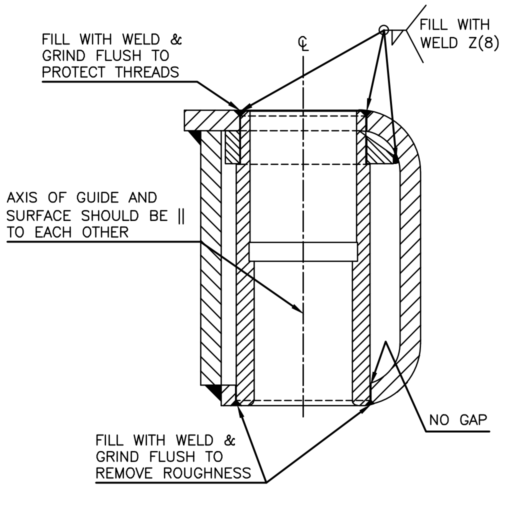


11. **WELDING BETWEEN END FRAME & DASHPOT GUIDE.**

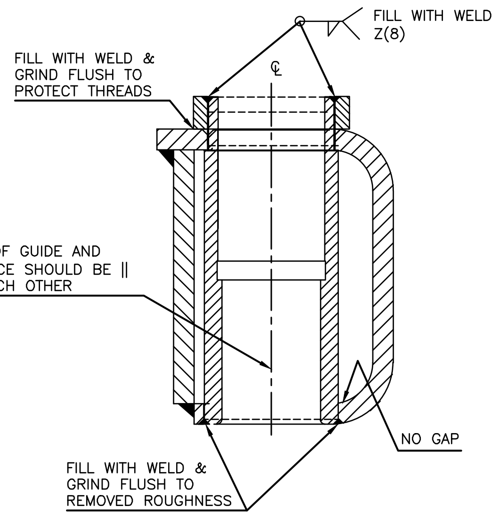


12. **WELDING BETWEEN END FRAME & DASHPOT GUIDE.**

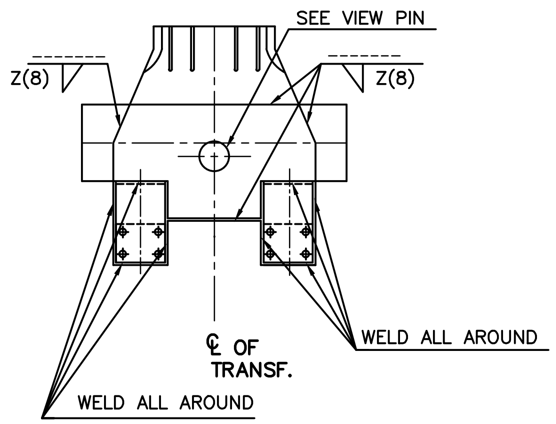


13. **WELDING BETWEEN HORIZONTAL CLAMP PLATE & MAIN CLAMP PLATE**

## NOTE TO SHOP :-

1-WELD TO BE FREE FROM BLOW HOLES, CREVICES,UNDERCUT &OTHER WELDING DEFECT.

2-CHECK ALL THE GAPS INSIDE THE END FRAME WHERE SHOTS CAN BE ENTRAPPED. IT SHOULD BE FILLED BY WELD BEFORE WELDING COVERING PLATE.

ADDITIONAL INFORMATION: STANDARD
STATUS OF DRAWING: U

DISTRIBUTION OF PRINTS

| TRE | TRX | TRM | FTM | QC |
|---|---|---|---|---|
| 1 | 1 | 3 | 6 | 1 |

TYPE OF PRODUCT OR NAME OF CUSTOMER/PROJECT: TRANSFORMER/REACTOR

BHARAT HEAVY ELECTRICALS LTD. BHOPAL

| | NAME | SIGN | DATE |
|---|---|---|---|
| DRN | SKG | | 10.12.16 |
| CHD | NM | | |
| APPD | AKD | | |

NO.OF VAR: –

| REV | DATE | | | ZONE | |
|---|---|---|---|---|---|
| 02 | 08/02/22 | ALTERED SKG / CHECKED SKG / APPROVED NM | | | WELDING DETAIL MODIFIED |
| 01 | 12/09/18 | ALTERED SKG / CHECKED NM / APPROVED AKD | | | NUMBERING DONE FOR WELDING DETAILS & DETAIL AT POINT 13 MODIFIED. |

DEPT TRE
CODE 406
WEIGHT(kg): –
REF TO ASSY DRG: –
ITEM NO.: –
NO.OF ITEM

TITLE: WELDING DETAILS FOR CORE CLAMPING STRUCTURE

DRAWING NO. 34997000095 REV 02

SHT NO. NO.OF SHT.