FIRST ANGLE PROJECTION

(ALL DIMENSIONS ARE IN mm)

DRG. NO. 0-103-07-62012 SH. 01 OF 01

SECTION B-B

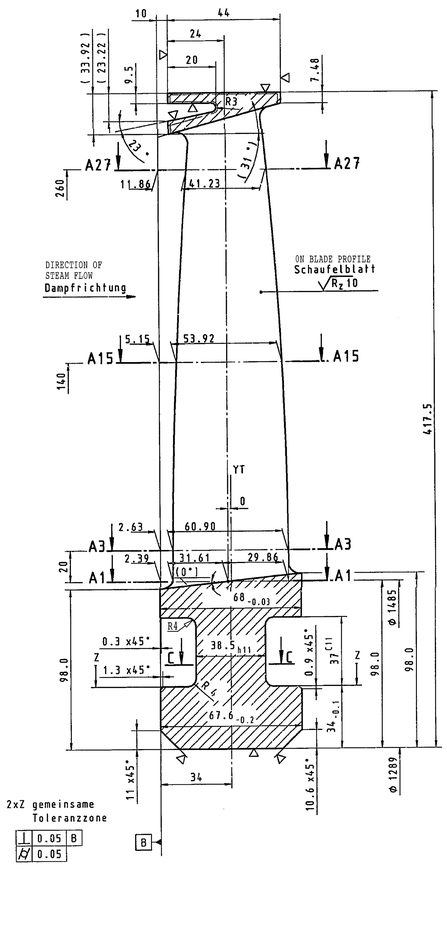

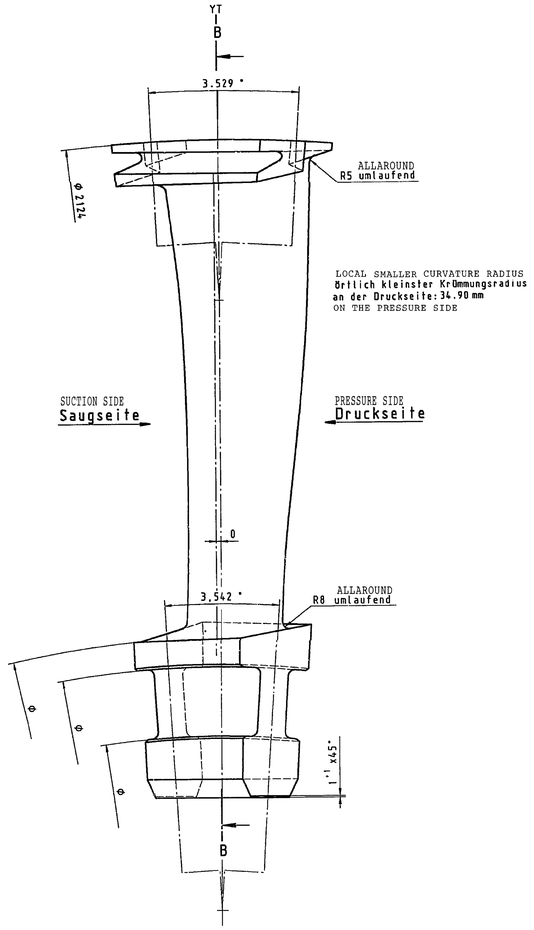

SECTION A27-A27

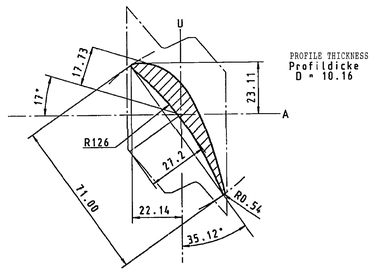

SECTION A15-A15

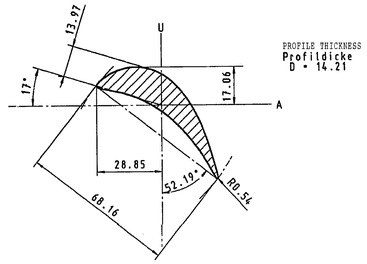

SECTION A3-A3

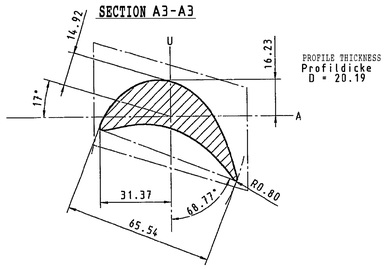

DIMENSIONS FOR DIE
Maßbild für die

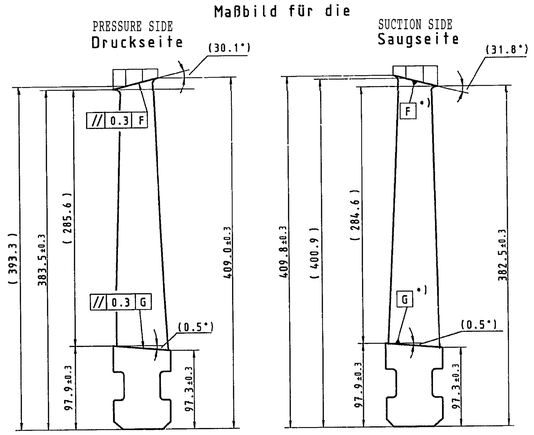

Rohteil in Zentrierlage
BLANK IN CENTER POSITION

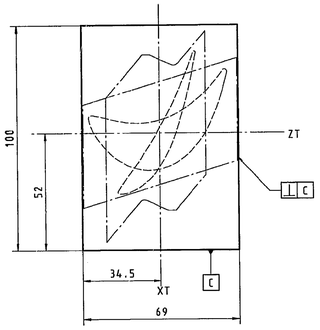

SECTION C-C

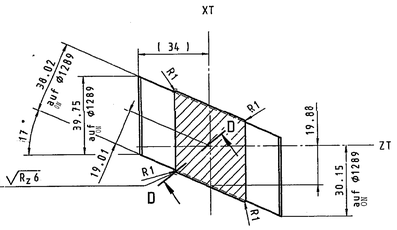

SECTION D-D

SECTION A1-A1

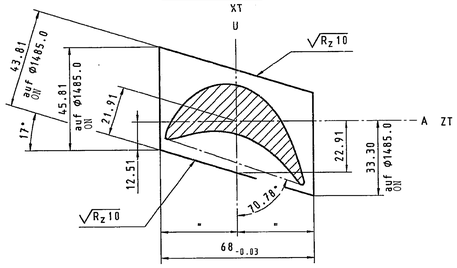

VIEW Z

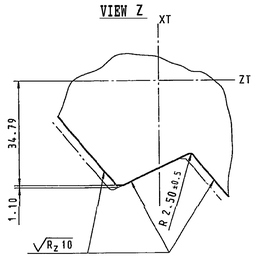

Alle Maße auf Ø2124 bezogen
ALL DIMENSIONS ARE RELATED ON Ø2124

TOLERANCES
Toleranzen

0.25	Profilform	PROFILE FORM
±0.25	Profildicke	PROFILE THICKNESS
±0.25	Profillänge	PROFILE LENGTH
±0.30	Profilwinkel	PROFILE ANGLE
±0.02	Teilung	PITCH

TAPER VALUES FOR JIG LENGTH = 1000mm
Konuswerte f. Vorrichtungsl. 1000 mm

			ROOT Fuß	SHROUD Deckpl.
BLADE POSITION	Schaufellage	Ex	9.031	—
TABLE INCLINATION	Tischneigung	Ey	59.086	—
MEASURED HEIGHT	Meßhöhe	Eh	37.959	—

Strak-Nr: 19114
Profilzeichnung: 7651-24606/010 bis /011
Nutzeichnung: 6661242
Schaufelstückzahl/Reihe: 102
(einschl. Schlußschaufel)

NOTES:

1. PROFILE CO-ORD. AS PER DRG. NO. 0-103-07-62009-00 (2 SH)
2. NUMBER OF PIECES PER ROW INCLUDING LOCK BLADE = 102

THE INFORMATION ON THIS DOCUMENT IS THE PROPERTY OF ... IT MUST NOT BE USED DIRECTLY OR INDIRECTLY IN ANY WAY DETRIMENTAL TO THE INTEREST OF THE COMPANY

SIGN. AND DATE | REF. DRG. NO 7651-24606 REV:A | COMPUTER FILE NAME 0103-07-62012-S00-S00.DWG

GENERAL DIMENSIONAL LIMITS, FITS & TOLERANCES AS PER HY0230261

	NAME	SIGN.	DATE	NO. OF VAR.
DRN.	SCS/TBP		23.5.2000	
CHD.	T.S.PRABHAKAR		23.5.2000	NA
APPD.	C.N.V.RAMANA		23.5.2000	

TYPE OF PRODUCT OR NAME OF CUSTOMER/PROJECT

DEPT. ITD | DEPT. CODE 615 | UNTOL. DIMS. CH. ±1/N/± | SCALE NTS | WEIGHT (KG) NA | REF. TO ASSY. DRG. NA | ITEM NO. NA | NO. OF ITEMS NA

TITLE LP MOVING BLADE-1L (F116-64/72-320-70.78°) (NEW 5.0Sqm)

CAPD CODE N.A. | DRAWING NO. 0-103-07-62012 | REV. 00 | SHT. No 01 | NO. OF SHT. 01

-00 VAR

REV.	DATE	ALTERED CHD/APPD	ZONE

FIRST ANGLE PROJECTION

(ALL DIMENSIONS ARE IN mm)

DRG. NO. 0-303-21-00006 SH. 01 OF 01

POS. NO. 1

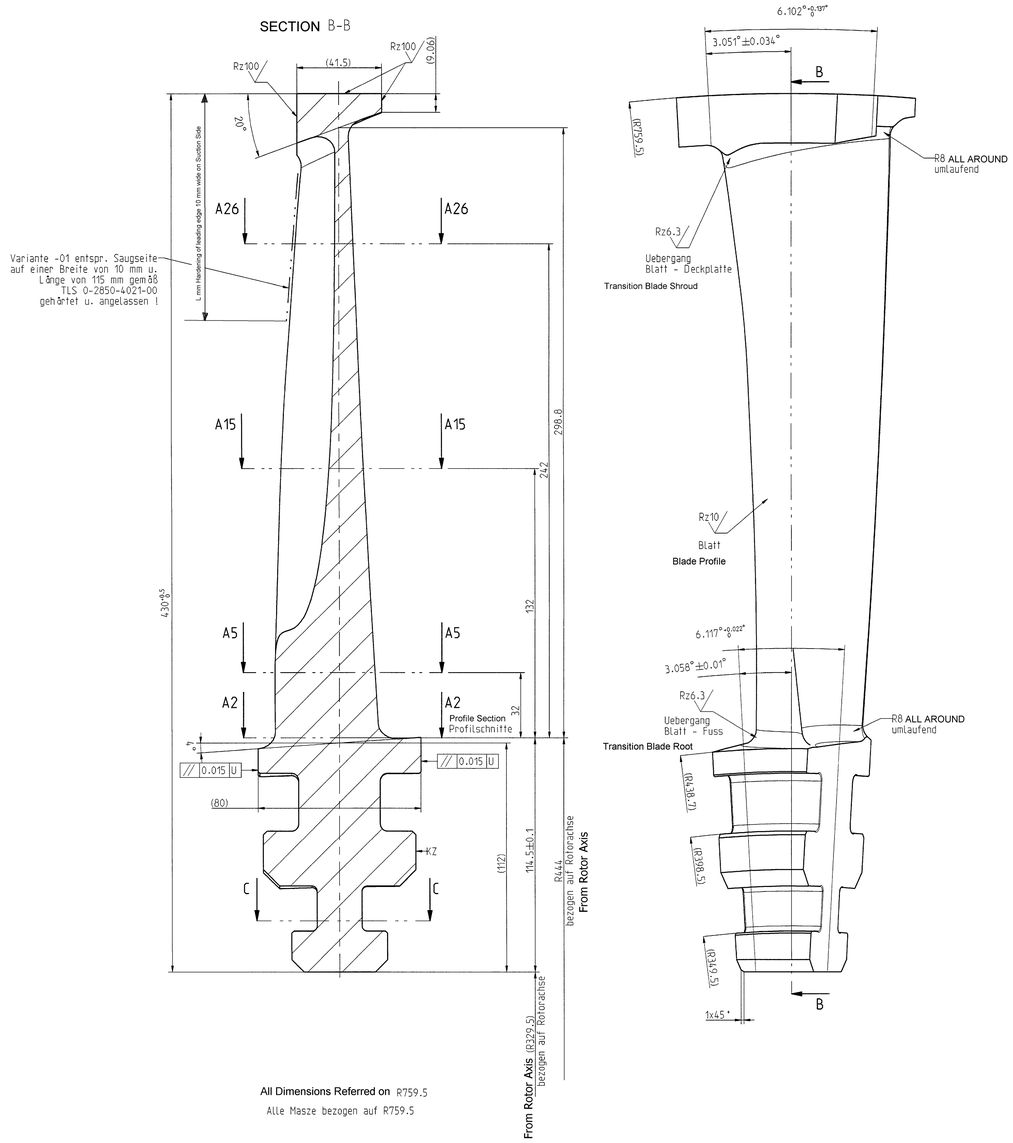

All Dimensions Referred on R759.5

Alle Masze bezogen auf R759.5

SCHEME OF DIMENSIONS

Stroemungskanal

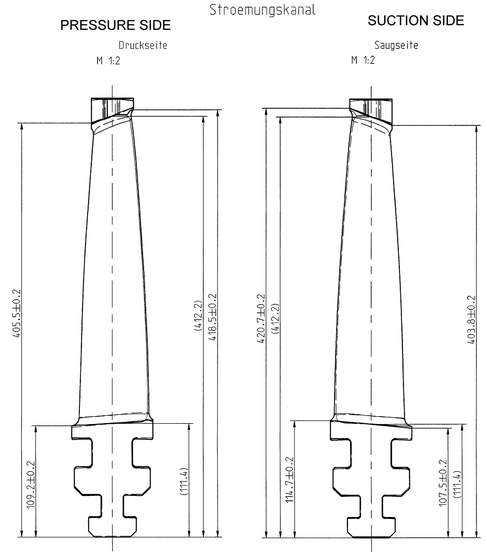

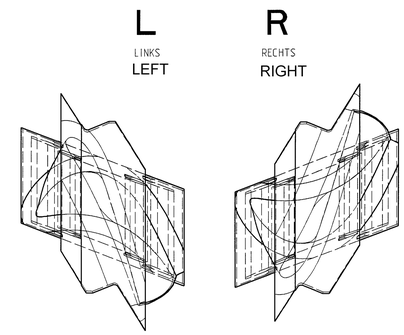

POS. NO. 2

Endschaufeln **LOCK BLADE**

fehlende Maße Endschaufel
siehe Laufschaufel

Sachnummer	Drehrichtung	Kantenhaertung
4-4920-2212-00	LINKS	ohne
4-4920-2212-01	LINKS	mit
4-4920-2202-00	RECHTS	ohne
4-4920-2202-01	RECHTS	mit

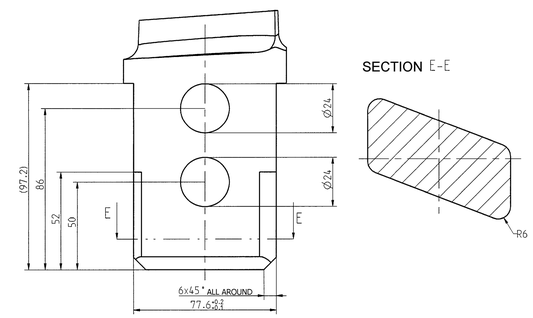

PROFILE TOLERANCE FOR THE

Profiltoleranzen

für die Prüfschnitte A5, A15, A26

CHECKING SECTIONS A5, A15, A26

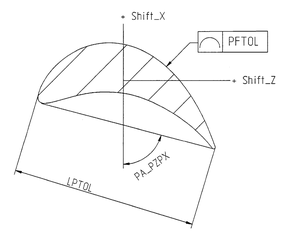

PFTOL	0.25
Shift_X	+0.50 -0.25
Shift_Z	+0.5 -0.25
PA_PZPX	±0.25
LPTOL	+0.25 -0.50

NOTES:

1. Profile co-ordinates as per drawing No:0-303-21-00007
2. Root and Groove As per drawing No:3-303-21-00061
3. Final Machining As per Blading Plan
4. Profile Checking Sections: A5, A15, A26.
5. Total No. of Blades including Lock Blade: 59 Pieces.
6. MIssing Dimensions of Pos No. 2 to be seen in Pos No.1

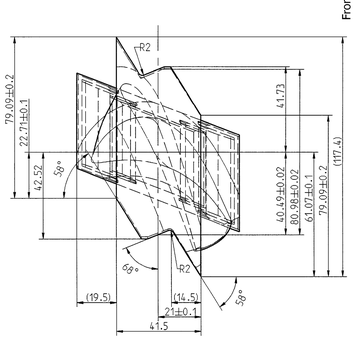

SECTION C-C

Alle Masze bezogen auf R329.5

All Dimensions Referred on R329.5

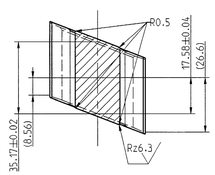

SECTION A2-A2

Alle Masze bezogen auf R444

All Dimensions Referred on R444

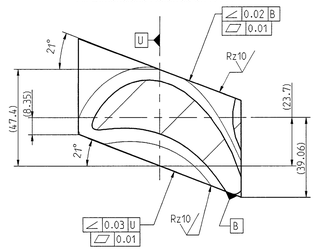

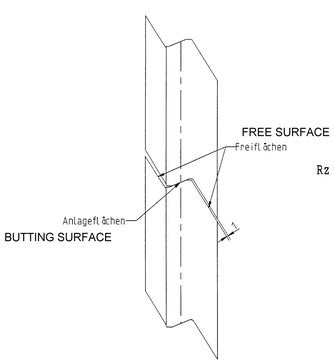

Rz 16 = 0.8 (Rz 6.3 = 0.4 Rz 10 = 0.8 Rz 100 = 12.5)

L	Pos No	Description	VAR
0	2	Lock Blade -Right	03
0	1	Normal Blade -Right	02
0	2	Lock Blade -Left	01
0	1	Normal Blade- Left	00

TYPE OF PRODUCT OR NAME OF CUSTOMER/PROJECT

	NAME	SIGN.	DATE	NO.OF VAR.
DRN.	Harish		02.06.05	NA
CHD.	T.S.Prabhakar		02.06.05	
APPD.	C.N.V.Ramana		02.06.05	

DEPT. ITD DEPT. CODE 415 | UNTOL. DIMS. CR. ±1/M/f | SCALE NTS | WEIGHT (KG) 3.8 | REF. TO ASSY. DRG. NA | ITEM NO. NA | NO.OF ITEMS NA

TITLE **L P MOVING BLADE-2 (SL 2.2 SQM)** | CARD CODE N.A. | DRAWING NO. 0-303-21-00006 | REV. 00 | SHT. No 01 | NO. OF SHT. 01

THE INFORMATION ON THIS DOCUMENT IS THE PROPERTY OF BHARAT HEAVY ELECTRICALS LIMITED. IT MUST NOT BE USED DIRECTLY OR INDIRECTLY IN ANY WAY DETRIMENTAL TO THE INTEREST OF THE COMPANY

GENERAL DIMENSIONAL LIMITS,FITS & TOLERANCES AS PER HY0230261

SIGN AND DATE | REF DRG NO 0-2128-2202-00 REV-4 | COMPUTER FILE NAME | INVENTORY NO

REV.	DATE	ALTERED CHD/APPD	ZONE

THIRD ANGLE PROJECTION

(ALL DIMENSIONS ARE IN mm)

DRG. NO. 0-351-29-61007 SH. 01 OF 01

NOTES:

1. FOR APPLICABLE DRAWING NOTES SEE ITEM 2.

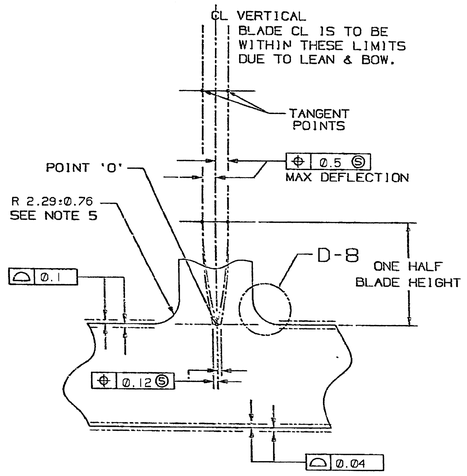

SECTION F-7 (G-3)

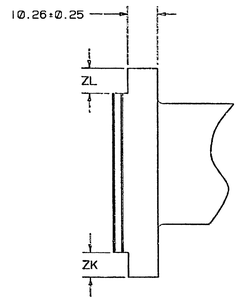

VIEW F-5 (G-5)

F-5 →

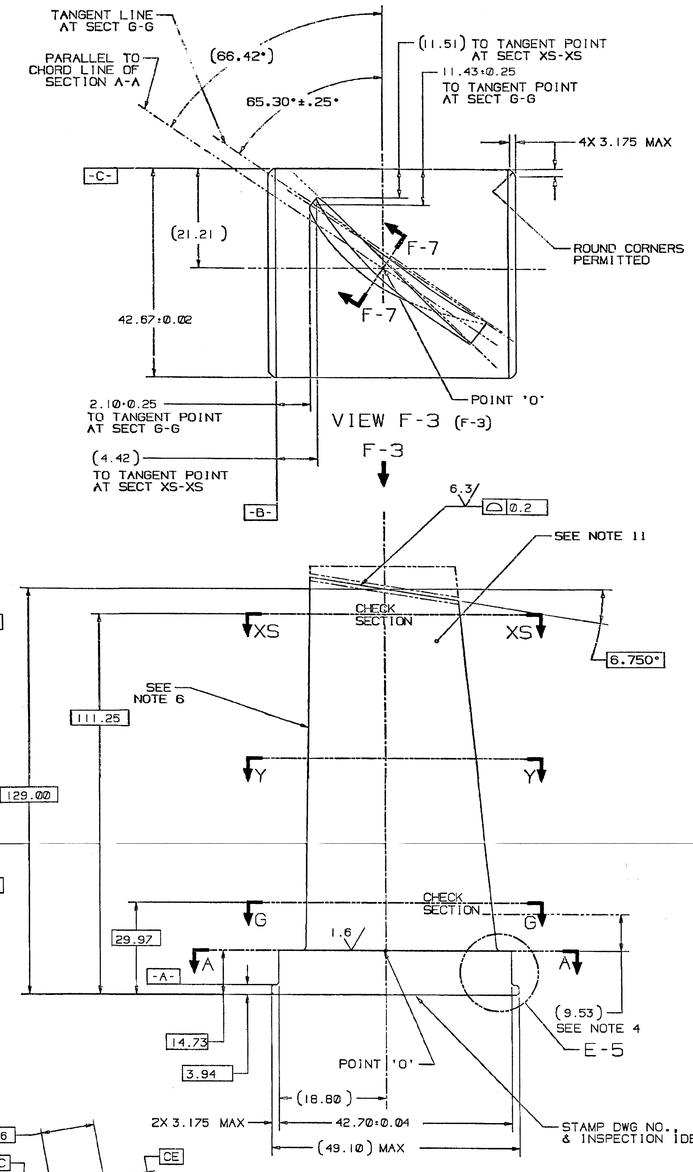

VIEW F-3 (F-3)

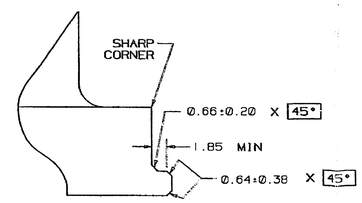

DETAIL E-5 (C-3)
(APPLIES TO BOTH SIDES OF BASE)

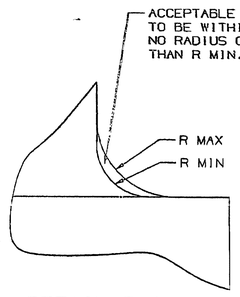

DETAIL D-8 (G-7)

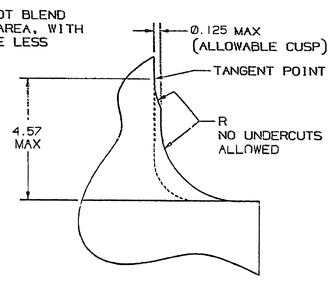

ALTERNATE METHOD OF MANUFACTURE
(REFER TO DETAIL D-8)

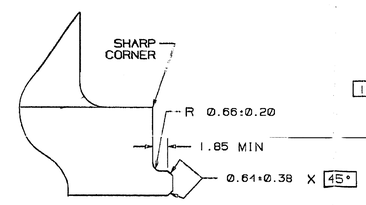

ALTERNATE METHOD OF MANUFACTURE
(REFER TO DETAIL E-5)

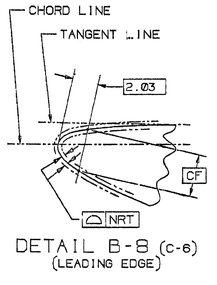

DETAIL B-8 (C-6)
(LEADING EDGE)

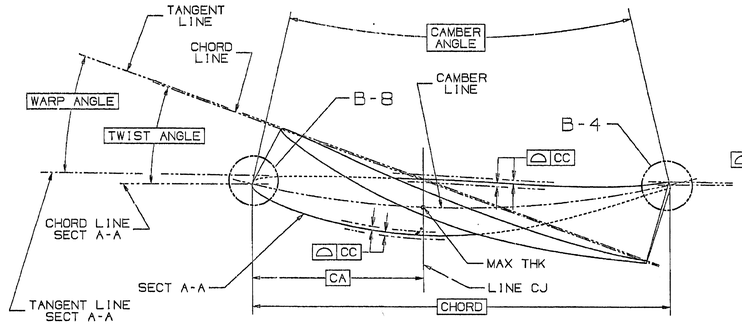

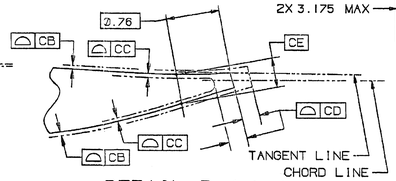

DETAIL B-4 (C-5)
(TRAILING EDGE)

VAR	ZK ± 0.12	ZL ± 0.12	MATERIAL	COATING	REF
01	OMIT	OMIT	HY10988	OMIT	P1
02	OMIT	6.73	HY10988	OMIT	P2
03	6.73	OMIT	HY10988	OMIT	P3
04	OMIT	OMIT	HY10988	ITEM 6	P4
05	OMIT	6.73	HY10988	ITEM 6	P5
06	6.73	OMIT	HY10988	ITEM 6	P6
07	OMIT	OMIT	HY10988	ITEM 7	P7
08	OMIT	6.73	HY10988	ITEM 7	P8
09	6.73	OMIT	HY10988	ITEM 7	P9
25	MATL HY10996 OWSA VAR 01				-
26	MATL HY10996 OWSA VAR 02				-
27	MATL HY10996 OWSA VAR 03				-

-C-	G-4	1
-B-	F-3	1
-A-	D-4	1
DATUM	ZONE	SHEET

MATING PART REFERENCE DATA	
POINT 'O' Ø	1113.76
CONE ANGLE	.000

SECTION	SECTION HEIGHT	CHORD	PERCENT THICKNESS	CAMBER ANGLE	TWIST ANGLE	WARP ANGLE	THICKNESS AT 'CA'	CA	CB	CC	CD	CE	CF	NRT
A-A	0.00	42.67	13.500	27.900	.000	.000	5.756	17.069	0.048	0.096	0.427	0.729	2.342	0.076
G-G	15.24	41.88	13.100	28.000	.567	.500	5.484	16.254	0.046	0.091	0.419	0.696	2.250	0.076
Y-Y	53.34	39.90	12.000	28.300	2.231	2.000	4.785	15.961	0.041	0.079	0.399	0.612	2.011	0.076
XS-XS	96.52	37.64	10.800	28.600	4.296	3.892	4.084	15.057	0.038	0.076	0.376	0.579	1.760	0.076

7	COATING, ALUMINUM-INORGANIC	P16A-A63	GT10125
6	COATING, ALUMINUM-INORGANIC	P16A-A65	GT10006
5	ACPT REQT-BLADES & VANES	P29A-A5900	GT10128
4	COMPR VANES-PROCESSING	P3C-A680	GT10083
3	X-Y COORDS (217X221)	324A5238	GT10356
2	APPLICABLE DWG NOTES	314A5140	GT10459
1	APPLIED PRACTICES	346A9200	HY0230261
IT.	NOMENCLATURE	IDENT	BHEL SPEC
	LIST OF COMPLEMENTARY DOCUMENTS		

TYPE OF PRODUCT OR NAME OF CUSTOMER/PROJECT: GAS TURBINE FR-6B

	NAME	SIGN.	DATE	NO. OF VAR.
DRN.	CMBS		18.04.99	
CHD.	R.SRINIVAS		18.04.99	NA
APPD.	Y.N.M		18.04.99	

DEPT. GTE; CODE 423; UNTO. DIMS. IN MM; SCALE NTS; WEIGHT (KG) 0.32; REF. TO ASSY. DRG. – NA; ITEM NO. NA; NO. OF ITEMS NA

TITLE: VANE STATOR, STG 6

CARD CODE; DRAWING NO. 0-351-29-61007; REV. 00

SHT. No. 01 OF SHT. 01

REV.	DATE	ALTERED	CHD/APPD

THE INFORMATION ON THIS DOCUMENT IS T NOT BE USED DIRECTLY OR INDIRECTLY IN

GENERAL DIMENSIONAL LIMITS, FITS & TOLERANCES AS PER HY0230261

COMPUTER FILE NAME 0129031.STP

REF. DRG. NO. 10B05156 REV -

SUR. AND DATE

WORKSHOP NO

THIRD ANGLE PROJECTION

(ALL DIMENSIONS ARE IN mm)

DRG. NO. 0-353-05-61003 SH. 1 OF 1

NOTES:

1. FOR APPLICABLE DRAWING NOTES SEE ITEM 2.

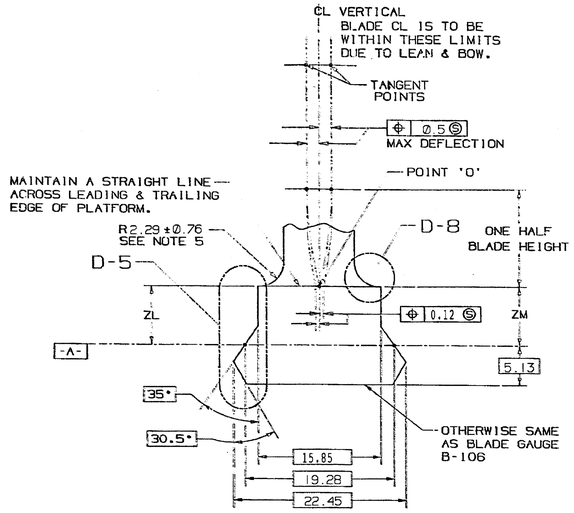

SECTIONS BA-BA, BB-BB & BC-BC (G-3)

SEE NOTE 6

SECTION	ZL ± 0.25	ZM ± 0.25
BA-BA	5.77	5.16
BB-BB	6.17	5.13
BC-BC	6.12	4.62

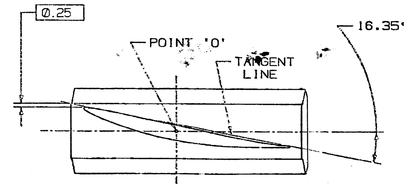

SECTION E-E (E-3)

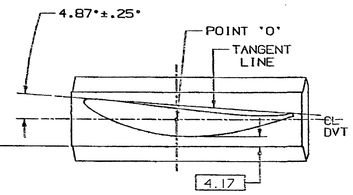

SECTION B-B (D-3)

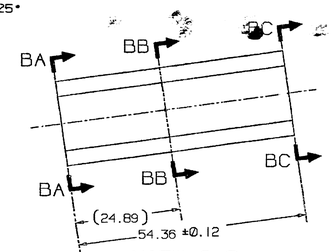

VIEW G-3 (F-3)
(AIRFOIL DELETED FOR CLARITY)

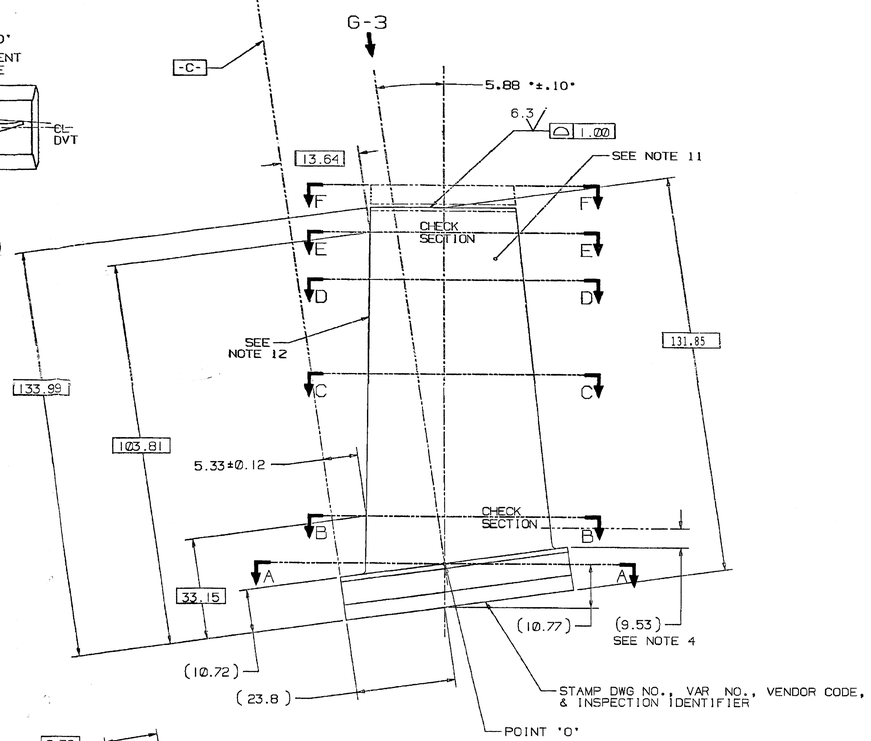

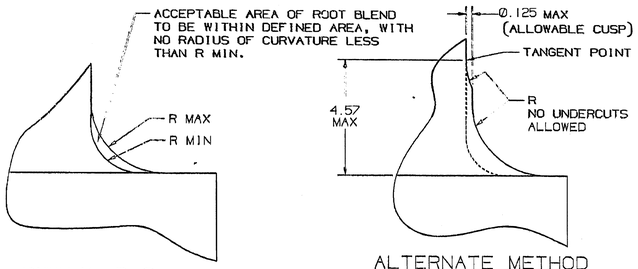

DETAIL D-8 (G-7)

ALTERNATE METHOD OF MANUFACTURE
(REFER TO DETAIL D-8)

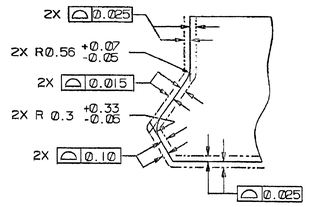

DETAIL D-5 (G-7)

-C-	F-4	1
-B-	F-8	1
-A-	B-8	1
DATUM	ZONE	SHEET

MATL HY10996 (C450) OWSA VAR 01	-	10
COAT PER ITEM 7 OWSA VAR 01	P3	03
COAT PER ITEM 6 OWSA VAR 01	P2	02
MATL HY10988 (AISI 403 Cb)	P1	01
DESCRIPTION	REF	VAR

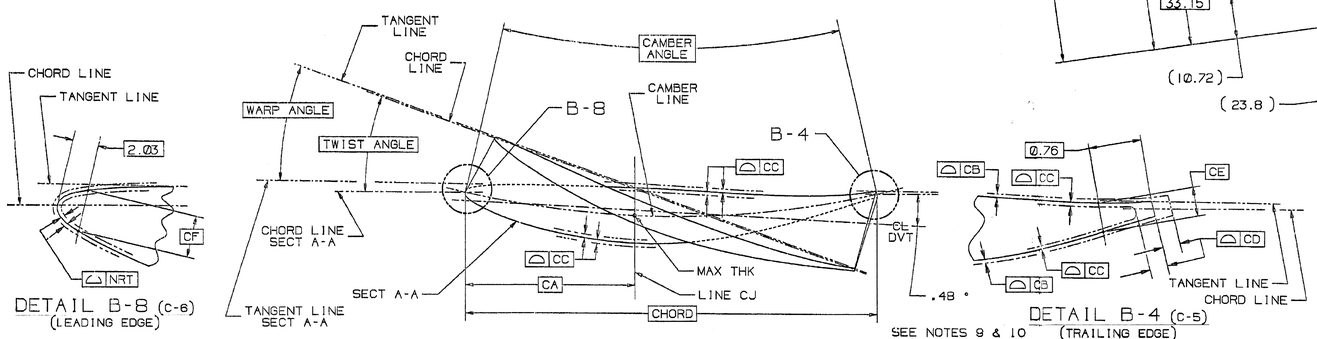

DETAIL B-8 (C-6)
(LEADING EDGE)

DETAIL B-4 (C-5)
(TRAILING EDGE)

SEE NOTES 9 & 10

SECTION	SECTION HEIGHT	CHORD	PERCENT THICKNESS	CAMBER ANGLE	TWIST ANGLE	WARP ANGLE	THICKNESS AT 'CA'	CA	CB	CC	CD	CE	CF	NRT
A-A	0.00	48.26	13.500	30.750	.000	.000	6.51	19.3	0.053	0.109	0.48	0.813	2.49	0.076
B-B	20.32	48.26	12.400	27.071	4.841	4.867	5.98	19.3	0.051	0.099	0.48	0.747	2.29	0.076
C-C	50.80	48.26	10.700	23.000	10.698	10.684	5.16	19.3	0.043	0.086	0.48	0.645	1.98	0.076
D-D	78.74	48.26	9.100	19.750	14.804	14.705	4.40	19.3	0.038	0.076	0.48	0.569	1.69	0.076
E-E	91.44	48.26	8.500	18.500	16.463	16.319	4.12	19.3	0.038	0.076	0.48	0.564	1.58	0.076
F-F	111.76	48.26	7.300	17.000	18.845	18.565	3.57	19.3	0.038	0.076	0.48	0.556	1.36	0.076

MATING PART REFERENCE DATA	
POINT 'O' Ø	894.79
RIM ANGLE	6.767
DOVETAIL ANGLE	56.900

7	COATING, ALUMINUM-INORGANIC	P16A-A63	GT10125
6	COATING, ALUMINUM-INORGANIC	P16A-A65	GT10606
5	ACPT REQT-BLADES & VANES	P29A-A6900	GT10128
4	COMPR VANES-PROCESSING	P3C-A660	GT10083
3	X-Y COORDS (217X368)	324A5243	GT10134
2	APPLICABLE DWG NOTES	314A5112	GT10607
1	APPLIED PRACTICES	348A6200	HY0230261
IT.	NOMENCLATURE	IDENT	STOCK
LIST OF COMPLEMENTARY DOCUMENTS			

TYPE OF PRODUCT OR NAME OF CUSTOMER/PROJECT: GASTURBINE Fr-6

	NAME	SIGN.	DATE	NO. OF VAR.
DRN.	SCS		24-3-99	NA
CHK.	RS		24-3-99	
APPD.	KMM		24-3-99	

DEPT. CODE	UNTO... DWG. OR C/W/F	SCALE	WEIGHT (KG)	REF. TO ASSY. DRG.	ITEM NO.	NO. OF ITEMS
423		NTS	0.23	NA	NA	NA

TITLE: BLADE, ROTOR-STG 6

CARD CODE: NA

DRAWING NO. 0-353-05-61003 REV. 00

SHT. No. 1 NO OF SHT. 1

REV.	DATE	ALTERED	CHD/APPD	ZONE

GENERAL DIMENSIONAL LIMITS,FITS & TOLERANCES AS PER HY0230261

REF. DWG. NO. 10985175 SHT "-" COMPUTER FILE NAME 03056031.TIF

SIGN. AND DATE

INFORMATION NO

THE INFORMATION ON THIS DOCUMENT IS THE PROPERTY OF NOT BE USED DIRECTLY OR INDIRECTLY IN ANY WAY DETRIMENTAL TO

THIRD ANGLE PROJECTION (ALL DIMENSIONS ARE IN mm)

DRG. NO. 0-353-05-61009 SH. 1 OF 1

NOTES:

1. FOR APPLICABLE DRAWING NOTES SEE ITEM 2.

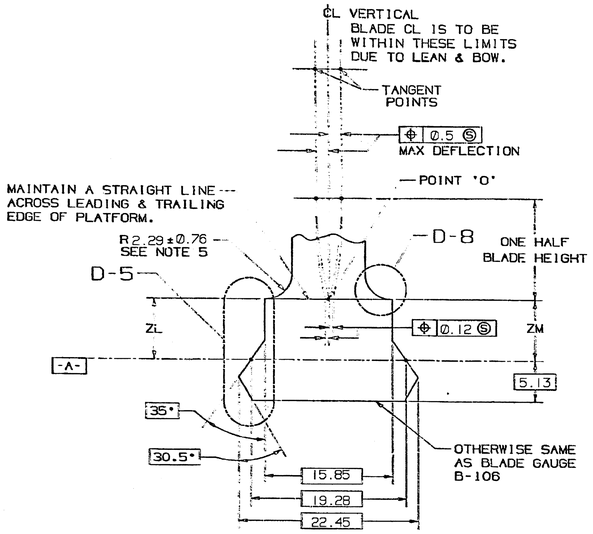

SECTIONS BA-BA, BB-BB & BC-BC (G-3)

SEE NOTE 6

SECTION	ZL +Ø.ØØ -Ø.5Ø8	ZM +Ø.ØØ -Ø.5Ø8
BA-BA	3.Ø23	5.791
BB-BB	6.985	6.985
BC-BC	6.146	3.7Ø8

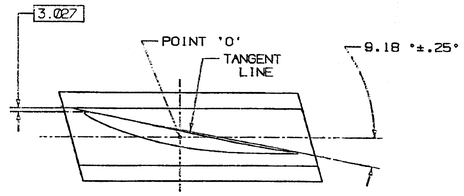

SECTION E-E (E-3)

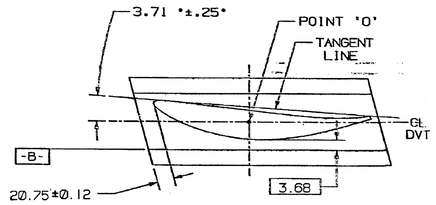

SECTION B-B (D-3)

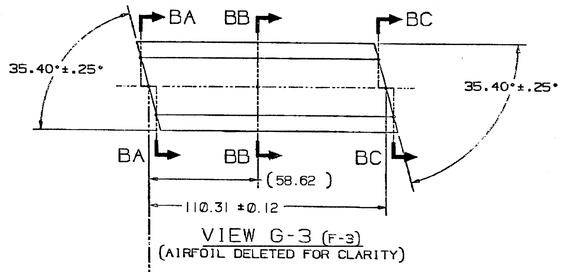

VIEW G-3 (F-3)
(AIRFOIL DELETED FOR CLARITY)

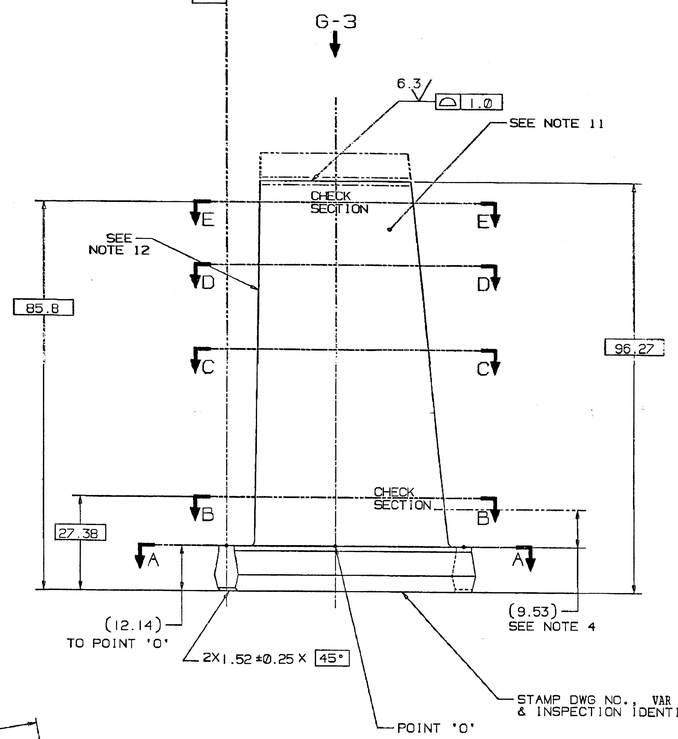

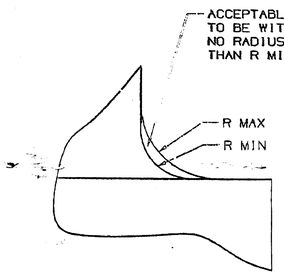

DETAIL D-8 (G-7)

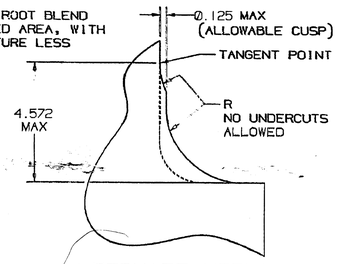

ALTERNATE METHOD OF MANUFACTURE
(REFER TO DETAIL D-8)

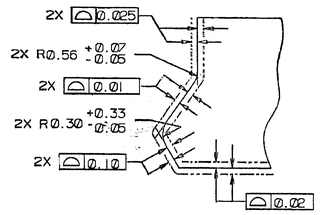

DETAIL D-5 (G-7)

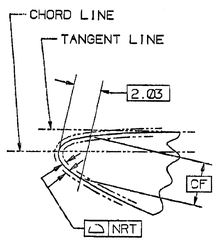

DETAIL B-8 (C-6)
(LEADING EDGE)

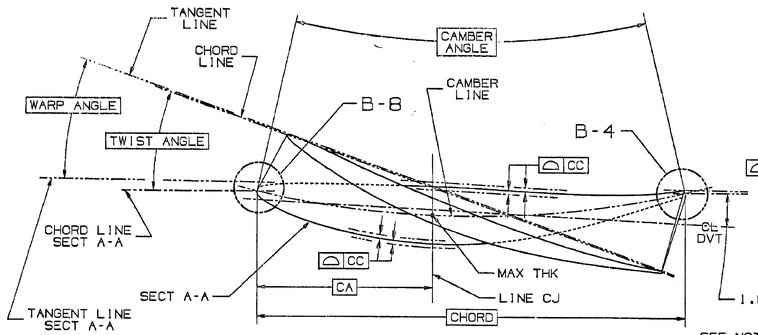

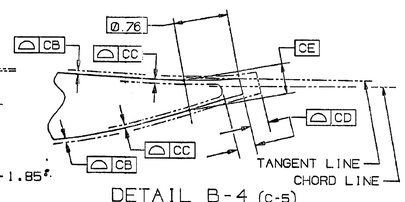

DETAIL B-4 (C-5)
(TRAILING EDGE)

SEE NOTES 9 & 10

SECTION	SECTION HEIGHT	CHORD	PERCENT THICKNESS	CAMBER ANGLE	TWIST ANGLE	WARP ANGLE	THICKNESS AT 'CA'	CA	CB	CC	CD	CE	CF	NRT
A-A	Ø.ØØ	54.43	17.5ØØ	19.ØØØ	.ØØØ	.ØØØ	9.517	21.772	Ø.Ø79	Ø.16Ø	Ø.544	1.176	3.462	Ø.114
B-B	15.24	54.43	14.ØØØ	16.7ØØ	2.8ØØ	1.837	7.615	21.772	Ø.Ø64	Ø.127	Ø.544	Ø.939	2.774	Ø.Ø76
C-C	3Ø.48	54.43	11.4ØØ	15.ØØØ	5.2ØØ	3.174	6.2ØØ	21.772	Ø.Ø51	Ø.1Ø4	Ø.544	Ø.767	2.261	Ø.Ø76
D-D	45.72	54.43	9.8ØØ	13.5ØØ	7.4ØØ	4.97Ø	5.33Ø	21.772	Ø.Ø46	Ø.Ø89	Ø.544	Ø.658	1.946	Ø.Ø76
E-E	73.66	54.43	7.4ØØ	11.4ØØ	1Ø.2ØØ	7.1Ø2	4.Ø49	21.772	Ø.Ø38	Ø.Ø76	Ø.544	Ø.556	1.471	Ø.Ø76

-C-	F-4	1
-B-	F-8	1
-A-	F-8	1
DATUM	ZONE	SHEET

MATL HY1Ø996 (C45Ø)OMSA VAR Ø1	-	1Ø
COAT PER ITEM 7 OMSA VAR Ø1	P3	Ø3
COAT PER ITEM 6 OMSA VAR Ø1	P2	Ø2
MATL HY1Ø988 (AISI 4Ø3 Cb)	P1	Ø1
DESCRIPTION	REF	VAR

MATING PART REFERENCE DATA	
POINT 'O' Ø	948.44
RIM ANGLE	.ØØØ
DOVETAIL ANGLE	35.4ØØ

7	COATING, ALUMINUM-INORGANIC	P16A-A63	GT1Ø125
6	COATING, ALUMINUM-INORGANIC	P16A-A95	GT7Ø6Ø6
5	ACPT REOT-BLADES & VANES	P29A-A9Ø9Ø	GT1Ø123
4	COMPR VANES-PROCESSING	P3C-A96Ø	GT1Ø7Ø53
3	X-Y COORDS (FOR 2173412)	342A1100	GT1Ø357
2	APPLICABLE DWG NOTES	314A5112	GT1Ø6Ø7
1	APPLIED PRACTICES	348A9200	HY0230261
IT.	NOMENCLATURE	IDENT	SPECN
LIST OF COMPLEMENTARY DOCUMENTS			

TYPE OF PRODUCT OR NAME OF CUSTOMER/PROJECT: GAS TURBINE FR-6

	NAME	SIGN.	DATE	NO. OF VAR.
DRN.	SCS	R.Cummins	24-3-99	NA
CHD.	RS	R.Cummins	24-3-99	NA
APPD.	RMM	R.Moore	24-3-99	

DCPT. GTD CODE: 423 | UNTOL. DIMS. GR. C/M/F | SCALE: NTS | WEIGHT (KG): 0.32 | REF. TO ASSY. DRG.: NA | ITEM NO.: NA | NO. OF ITEMS: NA

TITLE: BLADE, ROTOR-STG 17

CARD CODE: NA | DRAWING NO.: 0-353-05-61009 | REV.: 00

SHT. No. 1 NO OF SHT. 1

REV.	DATE	ALTERED	CHD/APPD	ZONE

THE INFORMATION ON: NOT BE USED DIREC

GENERAL DIMENSIONAL LIMITS, FITS & TOLERANCES AS PER HY0230261

COMPUTER FILE NAME 0353061.1IFF

REF TO DWG NO. 1D95181 REV**

SIGN AND DATE

INVENTORY NO

THIRD ANGLE PROJECTION

DRG. NO 0-353-05-61011 | SH. 1 OF 1

(ALL DIMENSIONS ARE IN mm)

NOTES:

1. FOR APPLICABLE DRAWING NOTES SEE ITEM 2.

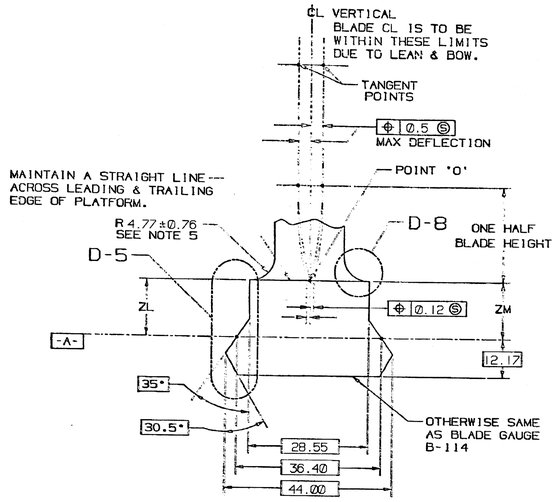

SECTIONS BA-BA, BB-BB & BC-BC (G-3)

SEE NOTE 6

SECTION	ZL ±0.25	ZM ±0.25
BA-BA	8.97	10.10
BB-BB	9.88	9.88
BC-BC	10.08	8.97

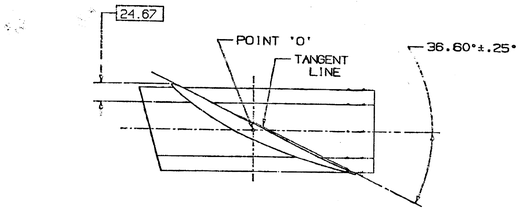

SECTION ZN-ZN (E-3)

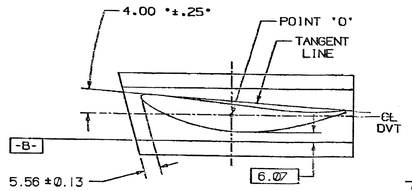

SECTION G-G (D-3)

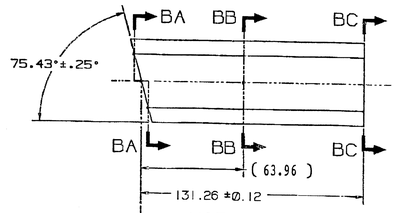

VIEW G-3 (F-3)
(AIRFOIL DELETED FOR CLARITY)

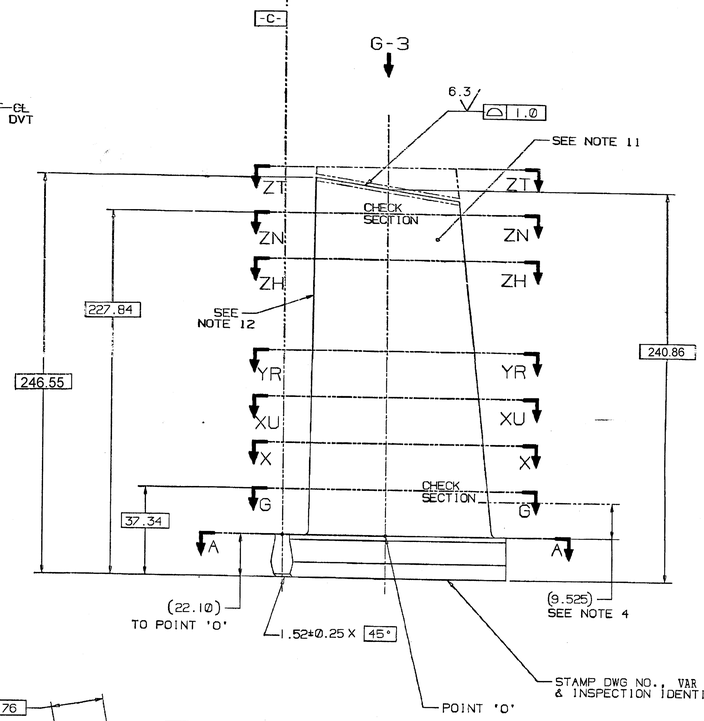

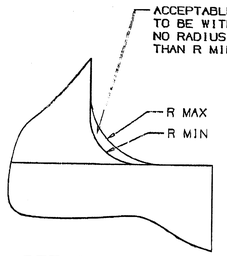

DETAIL D-8 (G-7)

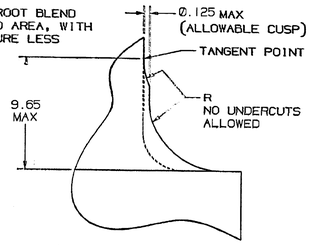

ALTERNATE METHOD OF MANUFACTURE
(REFER TO DETAIL D-8)

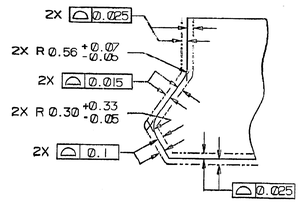

DETAIL D-5 (G-7)

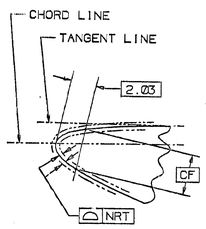

DETAIL B-8 (C-8)
(LEADING EDGE)

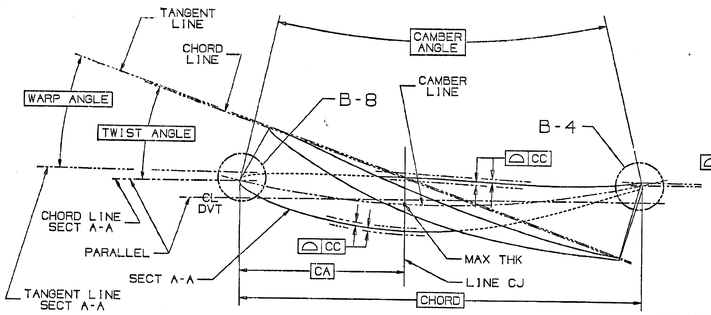

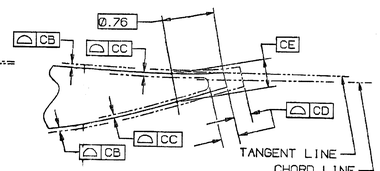

DETAIL B-4 (C-5)
(TRAILING EDGE)

SEE NOTES 9 & 10

SECTION	SECTION HEIGHT	CHORD	PERCENT THICKNESS	CAMBER ANGLE	TWIST ANGLE	WARP ANGLE	THICKNESS AT 'CA'	CA	CB	CC	CD	CE	CF	NRT
A-A	0.00	123.98	13.500	32.000	.000	N/A	16.736	61.989	0.142	0.282	1.240	2.238	2.835	0.119
G-G	15.24	123.98	12.800	29.800	4.000	N/A	15.870	61.989	0.135	0.267	1.240	2.113	2.685	0.111
X-X	50.80	123.98	11.150	24.700	12.500	N/A	13.823	61.989	0.114	0.231	1.240	1.829	2.334	0.094
XU-XU	101.60	123.98	8.800	18.200	22.500	N/A	10.910	61.989	0.091	0.180	1.240	1.435	1.829	0.076
YR-YR	152.40	123.98	6.450	13.000	30.300	N/A	7.996	61.989	0.066	0.132	1.240	1.046	1.336	0.076
ZH-ZH	193.04	123.98	4.600	9.600	35.300	N/A	5.702	61.989	0.046	0.094	1.240	0.744	0.950	0.076
ZN-ZN	205.74	123.98	4.000	8.700	36.600	N/A	4.933	61.989	0.041	0.081	1.240	0.648	0.826	0.076
ZT-ZT	215.90	123.98	3.550	8.000	37.400	N/A	4.402	61.989	0.036	0.071	1.240	0.574	0.734	0.076

-C-	F-4	1
-B-	F-8	1
-A-	F-8	1
DATUM	ZONE	SHEET

MATL HY10996 (C450)	01
DESCRIPTION	VAR

MATING PART REFERENCE DATA	
POINT 'O' Ø	833.92
RIM ANGLE	.000
DOVETAIL ANGLE	75.433

5	ACPT REQT-BLADES & VANES	P29A-AG900	GT10128
4	COMPR VANES-PROCESSING	P3C-AG80	GT10083
3	X-Y COORDS (216X966)	324A5255	GT10361
2	APPLICABLE DWG NOTES	314A5112	GT10307
1	APPLIED PRACTICES	348A9200	HY230261
IT.	NOMENCLATURE	IDENT	SPECN

LIST OF COMPLEMENTARY DOCUMENTS

THE INFORMATION ON THIS DOCUMENT IS THE PROPERTY OF ... IT MUST NOT BE USED DIRECTLY OR INDIRECTLY IN ANY WAY DETRIMENTAL TO THE INTEREST OF THE COMPANY

GENERAL DIMENSIONAL LIMITS, FITS & TOLERANCES AS PER HY0230261

	NAME	SIGN.	DATE	NO. OF VAR.
DRN.	SCS		24-3-99	
CHD.	RS		24-3-99	NA
APPD.	KMH		24-3-99	

TYPE OF PRODUCT OR NAME OF CUSTOMER/PROJECT: GAS TURBINE FR-6

REV.	DATE	ALTERED	CHD/APPD
01	1.12.05	NVS	SSR

DIM 240.86 WAS 242.34
DIM 246.55 WAS 248.03
DCA:GT1665

DEPT. GTD | CODE 423 | UNTOL. DIMS. G1 G/M/F | SCALE NTS | WEIGHT (KG) 2.4 | REF. TO ASSY. DRG. NA | ITEM NO. NA | NO. OF ITEMS NA

TITLE: BLADE ROTOR STG 1

CARD CODE NA | DRAWING NO. 0-353-05-61011 | REV. 01 | SHT. No. 1 | NO OF SHT. 1

THIRD ANGLE PROJECTION

(ALL DIMENSIONS ARE IN mm)

DRG. NO. 0-353-05-61013 | SH. 1 OF 1

NOTES:

1. FOR APPLICABLE DRAWING NOTES SEE ITEM 2.

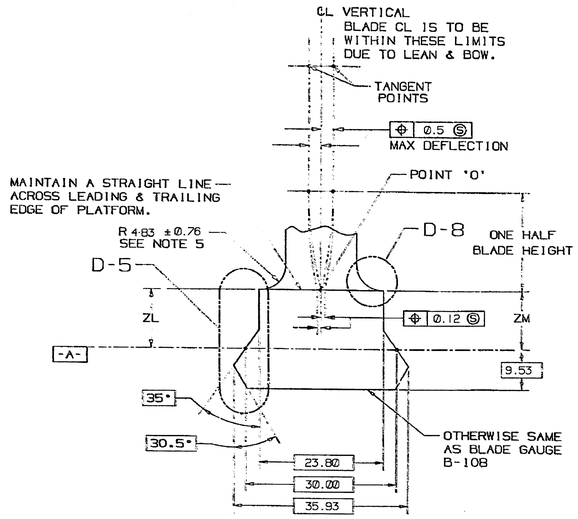

SECTIONS BA-BA, BB-BB & BC-BC (G-3)

SEE NOTE 6

SECTION	ZL ±0.25	ZM ±0.25
BA-BA	7.19	7.87
BB-BB	7.75	7.75
BC-BC	7.85	7.06

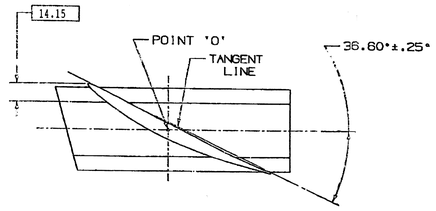

SECTION S-E (E-3)

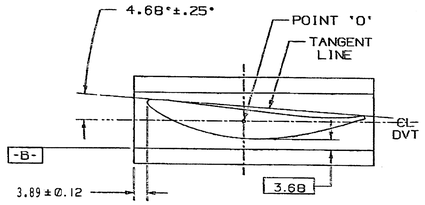

SECTION B-B (D-3)

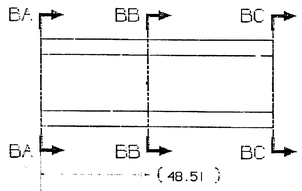

VIEW G-3 (F-3)
(AIRFOIL DELETED FOR CLARITY)

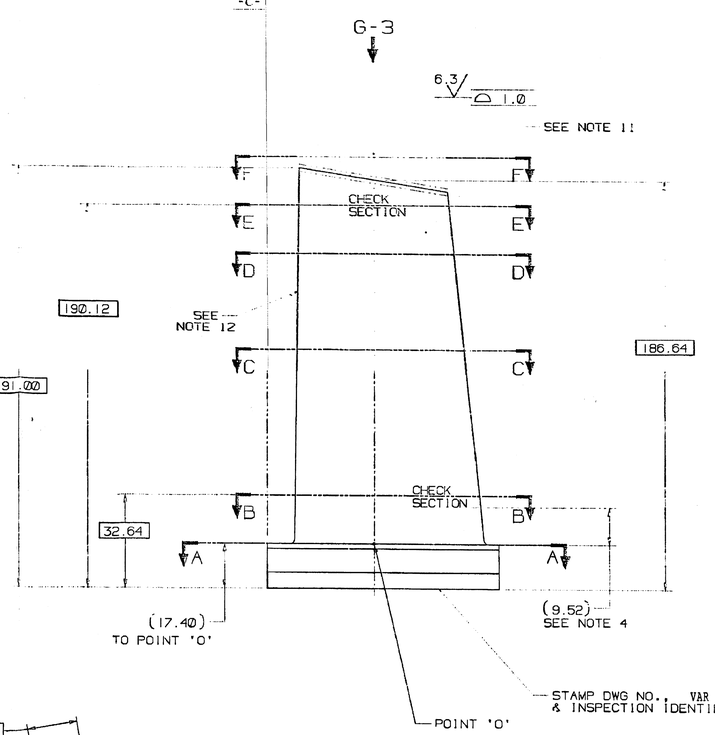

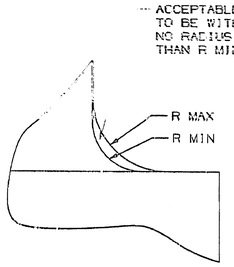

DETAIL D-8 (G-7)

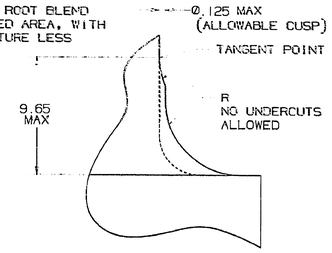

ALTERNATE METHOD OF MANUFACTURE
(REFER TO DETAIL D-8)

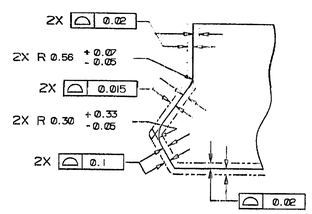

DETAIL D-5 (G-7)

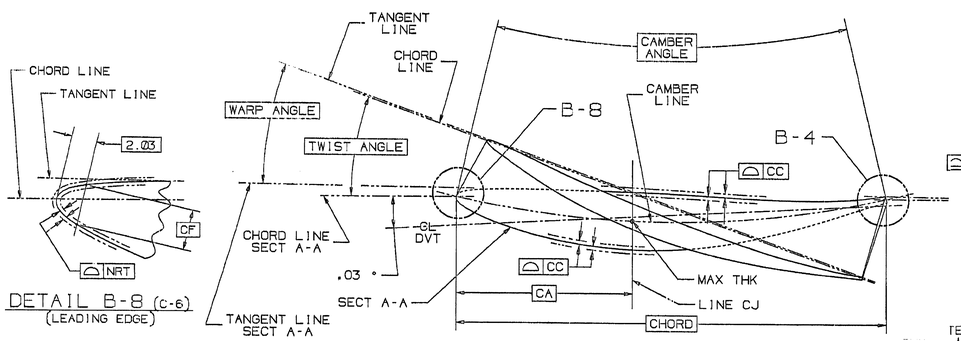

DETAIL B-8 (C-6)
(LEADING EDGE)

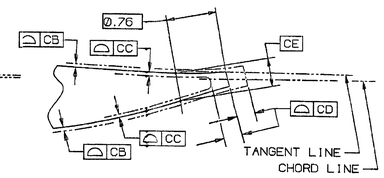

DETAIL B-4 (C-5)
(TRAILING EDGE)

SECTION	SECTION HEIGHT	CHORD	PERCENT THICKNESS	CAMBER ANGLE	TWIST ANGLE	WARP ANGLE	THICKNESS AT 'CA'	CA	CB	CC	CD	CE	CF	NRT
A-A	0.00	99.187	13.500	37.000	.000	.000	13.380	39.675	0.112	0.223	0.990	1.572	3.647	0.125
B-B	15.24	99.187	12.700	34.000	4.384	4.400	12.590	39.675	0.104	0.210	0.992	1.481	3.444	0.109
C-C	101.60	99.187	8.250	21.200	24.271	24.234	8.176	39.675	0.060	0.137	0.990	0.963	2.263	0.076
D-D	152.40	99.187	5.630	15.800	31.706	31.567	5.580	39.675	0.046	0.094	0.990	0.658	1.549	0.076
E-E	172.72	99.187	4.580	13.900	34.250	34.067	4.541	39.675	0.038	0.076	0.990	0.538	1.260	0.076
F-F	190.50	99.187	3.650	12.300	36.642	36.397	3.660	39.675	0.038	0.076	0.990	0.531	1.008	0.076

-C-	F-4	1
-B-	F-6	1
-A-	F-8	1
DATUM	ZONE	SHEET

MATL HY10996 (C450)OWSA VAR 01	-	10
COAT PER ITEM 7 OWSA VAR 01	P3	03
COAT PER ITEM 6 OWSA VAR 01	P2	02
MATL HY10988 (AISI 403 CD)	P1	01
DESCRIPTION	REF	VAR

MATING PART REFERENCE DATA	
POINT 'O' Ø	833.93
RIM ANGLE	.000
DOVETAIL ANGLE	75.433

7	COATING, ALUMINUM-INORGANIC	P16A-AG3	GT10125
6	COATING, ALUMINUM-INORGANIC	P16A-AG5	GT10606
5	ACPT REOT-BLADES & VANES	P29A-AG800	GT10128
4	COMPR VANES-PROCESSING	P3C-AG60	GT10783
3	X-Y COORDS (217X369)	324A5244	GT10560
2	APPLICABLE DWG NOTES	314A5112	GT10607
1	APPLIED PRACTICES	34BA9200	HY030261
IT.	NOMENCLATURE	IDENT	SPCEN
	LIST OF COMPLEMENTARY DOCUMENTS		

TYPE OF PRODUCT OR NAME OF CUSTOMER/PROJECT: GAS TURBINE FR-6

BHARAT HEAVY ELECTRICALS LIMITED
HYDERABAD

	NAME	SIGN.	DATE	NO. OF VAR.
DRN.	SCS		24-3-99	
CHD.	RS		24-3-99	NA
APPD.	KMM		24-3-99	

DEPT.	GTD	UNTO... DIMS.	SCALE	WEIGHT (KG)	REF. TO ASSY. DRG.	ITEM NO.	NO. OF ITEMS
CODE	423	GR. G/W/F	NTS	1.23	NA	NA	NA

TITLE: BLADE, ROTOR-STG 3

CARD CODE: NA | DRAWING NO. 0-353-05-61013 | REV. 00 | SHT. No 1 | NO OF SHT. 1

REV.	DATE	ALTERED	CHD/APPD

ZONE

THE INFORMATION ON THIS DOCUMENT IS THE PROPERTY OF BHARAT HEAVY ELECTRICALS LIMITED. IT MUST NOT BE USED DIRECTLY OR INDIRECTLY IN ANY WAY DETRIMENTAL TO THE INTEREST OF THE COMPANY

GENERAL DIMENSIONAL LIMITS, FITS & TOLERANCES AS PER HY030261

SIGN. AND DATE | REF. DRG. NO. 1198217 | COMPUTER FILE NAME 0353611.TIFF

INVENTORY NO

DR. NO 1-10307-62028

( )=CHECK SECTIONS FOR ROUGH FORGING

POS NO:1

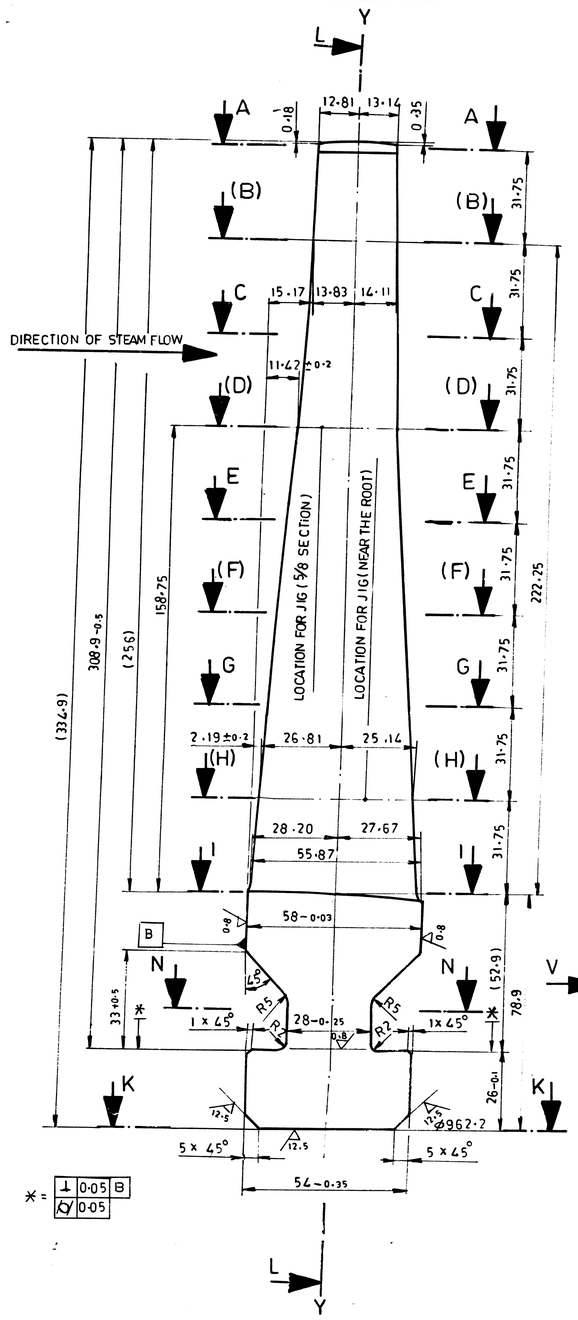

SECTION L-L

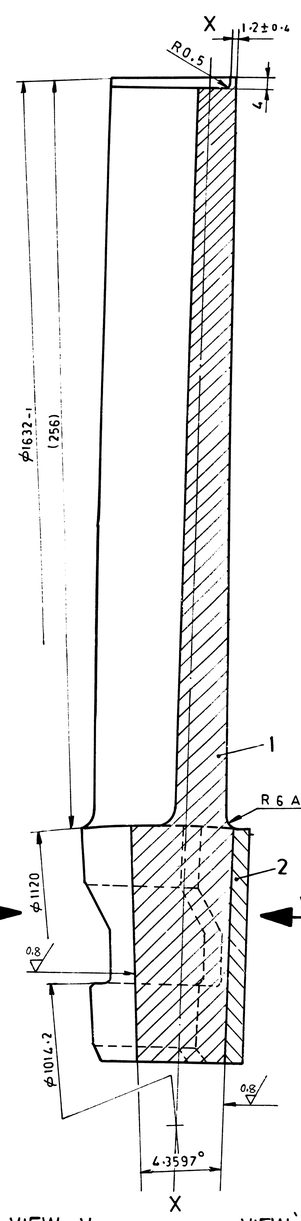

SECTION B-B

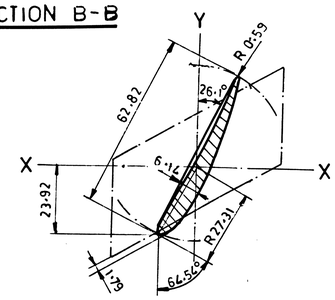

SECTION D-D

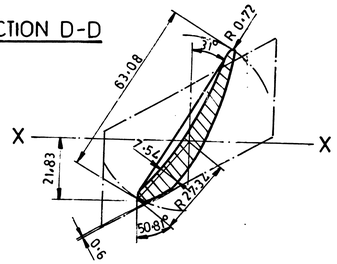

SECTION H-H

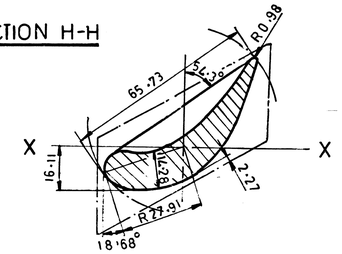

SECTION I-I

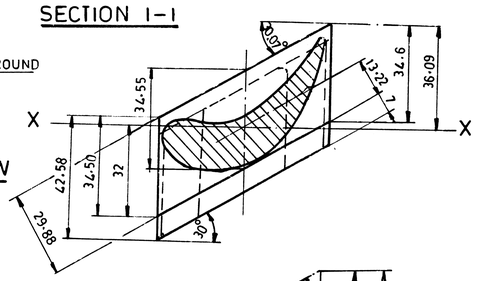

SECTION K-K

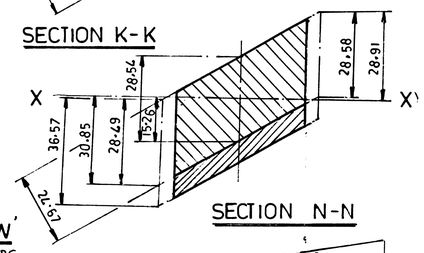

POS NO:2

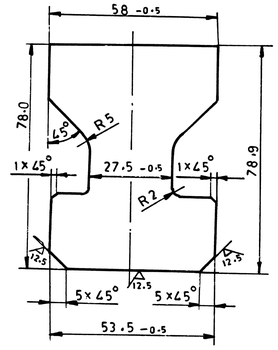

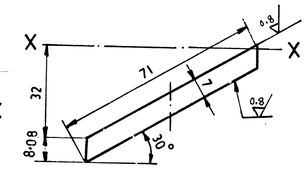

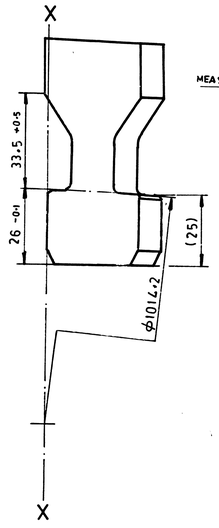

TOLERANCES FOR THE BLADE

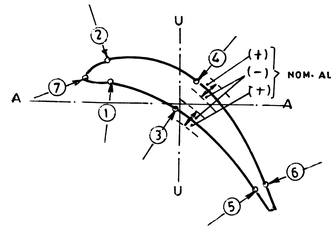

SCHEME OF ANGLE POSITION

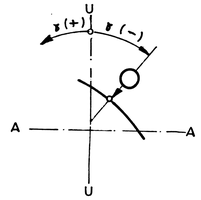

MEASURED POINT	COORDINATES A	COORDINATES U	ANGLE I	NOMINAL ALLOWANCE UPPER	NOMINAL ALLOWANCE LOWER
TIP	SECTION B-B				
1	-11.57	17.65	-60.89	0.82	-0.82
2	-7.35	20.87	-46.11	1.22	-0.82
3	-1.13	-1.31	-64.03	0.62	-0.62
4	3.97	8.96	-67.19	1.02	-0.87
5	10.75	-27.52	-66.36	0.87	-0.82
6	12.71	-26.83	-75.55	1.22	0.87
7	-13.66	23.59	51.87	0.82	-0.82
5/8	SECTION D-D				
1	-16.14	15.32	-46.84	0.76	-0.76
2	-10.19	20.46	-28.75	1.16	-0.76
3	-1.56	-1.68	-60.13	0.16	-0.16
4	4.57	1.55	-64.90	0.56	-0.16
5	11.56	-27.68	-64.39	0.76	-0.76
6	14.08	-26.79	-75.62	1.16	-0.76
7	-17.55	20.80	72.63	8.16	-0.16
ROOT	SECTION H-H				
1	-18.58	1.90	-2.39	0.23	-0.23
2	-21.94	13.95	30.21	0.63	-0.23
3	-0.65	-3.07	-35.66	0.23	-0.23
4	7.91	6.55	-44.98	0.63	-0.23
5	19.92	-26.31	-54.38	0.23	-0.23
6	23.65	-24.36	-75.74	0.63	-0.23
7	-26.36	4.88	-59.82	0.33	-0.33

ALLOWABLE RANGE OF BLADE FREQUENCIES

MODE	STATIONARY FREQUENCIES IN BENCH TEST	FREQUENCY DROP IN ROTOR	Var
1	241 259 Hz	2 Hz	-00
1	248 TO 256 Hz	2 Hz	-01

AFTER OVER SPEED TESTING MEASURE THE 10 BLADES BEFORE AND AFTER THE END PIECE ONCE MORE

SURFACE QUALITY FOR THE BLADE 1.6

INLET EDGE, OUTLET EDGE AND BLADE ROOT 0.4

WITHOUT SHIM

TAPER VALUES FOR JIG LENGTH = 1000 mm
POSITION OF BLADE EX = 18.99
TABLE INCLINATION EY = 65.85
MEASURING HEIGHT EH = 24.6

R

DIRECTION OF ROTATION IS CLOCKWISE WHEN SEEN IN THE DIRECTION OF STEAM FLOW

NOTES:-

1. BLADE FORGING AS PER 1-10307-62904 VAR:02
2. PROFILE CO-ORDINATES AS PER 1-10307-62021
3. BLADE ROOT AS PER 4-10300-62012

VIEW V
PRESSURE SIDE

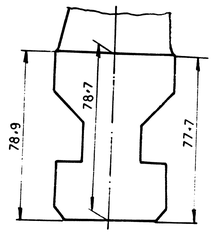

VIEW 'W'
SUCTION SIDE

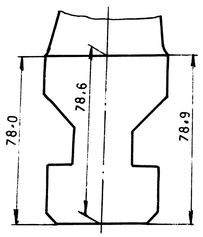

SECTION N-N

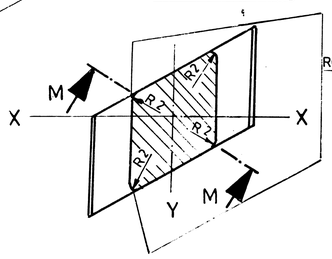

SECTION M-M

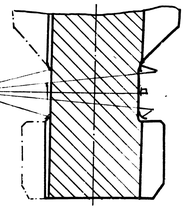

REV:01
Date:27.12.2002
Altered By: TS Prabhakar
Checked By: CNV Ramana
Var 01 added

TYPE OF PRODUCT OR NAME OF CUSTOMER/PROJECT			
DRN	L.W.C.		25.8.89
CHD	T.S. PRABHAKAR		25.8.89
APPD	B.V.S.N. SASTRY		25.8.89
DEPT CODE	GRADE OF UNTOL DIM C/M/F	SCALE 1:1	WEIGHT (KG)
REF. TO ASSY. DRG.	ITEM NO	NO OF ITEMS	
TITLE MOVING BLADE (ND4/560/3) (F54-63/63-254-60°) IR	CARD CODE	DRG. NO. 1-10307-62028 VAR. XX	REV 01
		SHEET NO 7	NO. OF SHEETS 7

-01
-00
VAR.

SIZE A1

REF. DRG. NO
SIGN AND DATE
INVENTORY NO

FIRST ANGLE PROJECTION

(ALL DIMENSIONS ARE IN mm)

SH. 01 OF 01 | DRG. NO. 1-301-81-00001

SECTION B-B

EXECUTION: 02 "R"

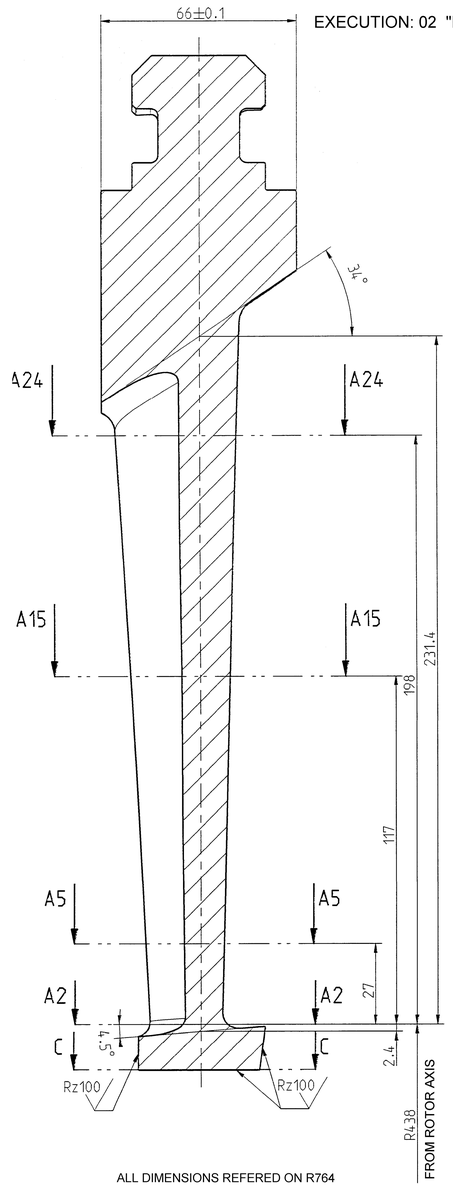

POS : 1

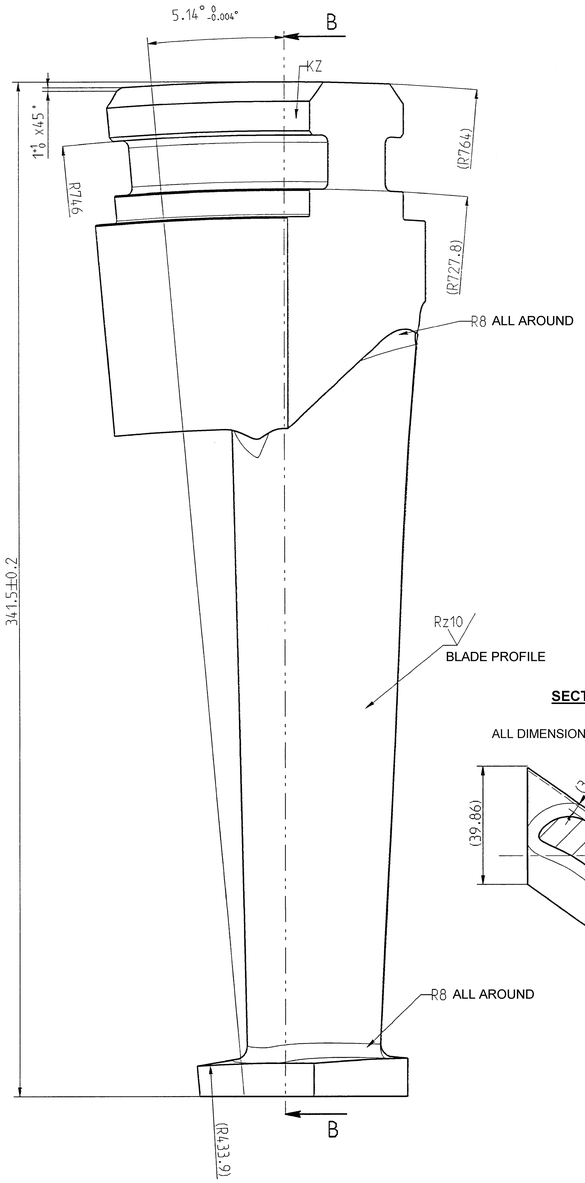

SCHEME OF DIMENSIONS

PRESSURE SIDE

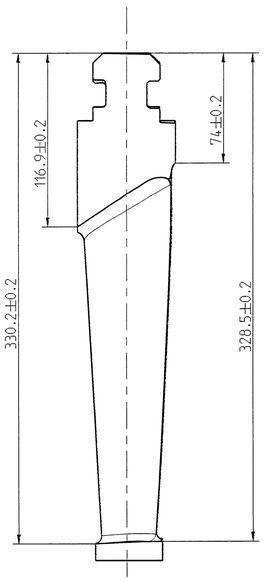

SUCTION SIDE

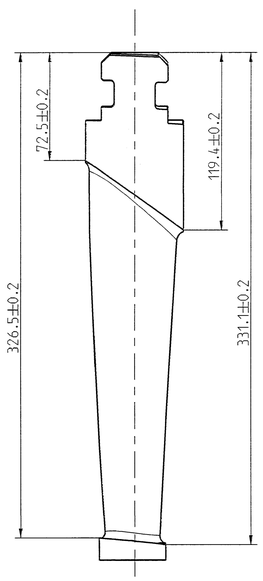

Rz16 = 0.8 (Rz10 = 0.8 Rz100 = 12.5)

L — EXECUTION: 00 "L" — LEFT

R — EXECUTION: 02 "R" — RIGHT

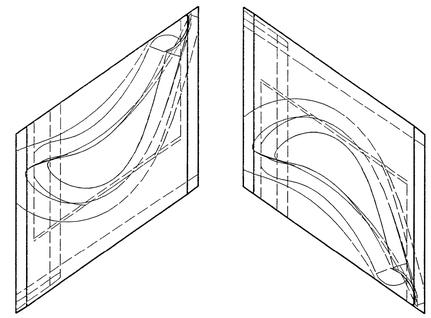

POS : 2

GUIDE BLADES AT JOINT PLANE(2PCS)
MADE BY REWORKING ON NORMAL GIUDE BLADE

EXECUTION: 01 "L"

EXECUTION: 03 "R"

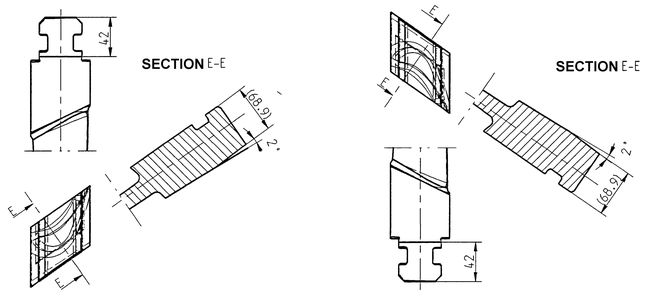

SECTION A2-A2

ALL DIMENSIONS REFERED ON R438

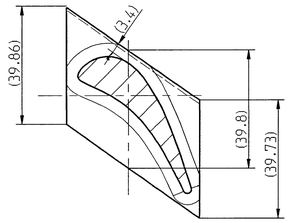

EY VALUE FOR 250mm SINE BAR LENGTH	
FOR LEFT VAR 00 & 01	FOR RIGHT VAR 02 & 03
EX= 6.4890	EX= 6.4985
EY= 18.5403	EY= 18.5403

BLADE ROOT DETAIL

√Rz25 = 1.6 (√Rz16 = 0.8)

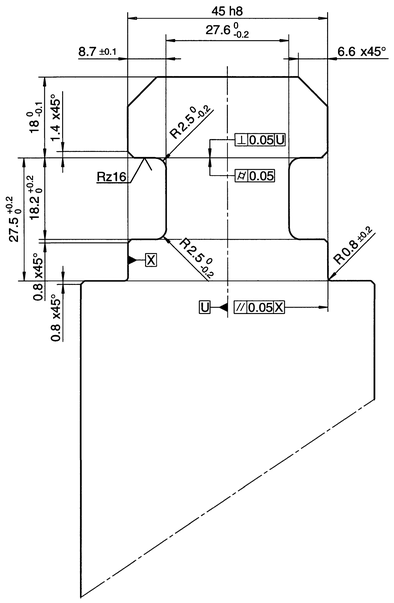

ALL DIMENSIONS REFERED ON R764

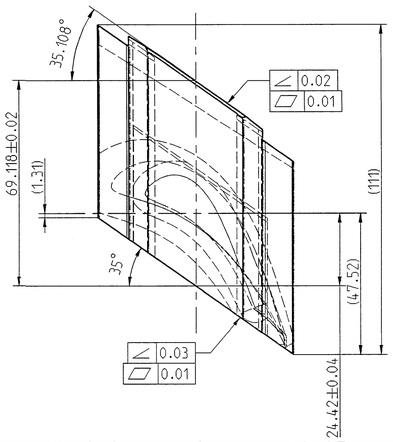

SECTION C-C

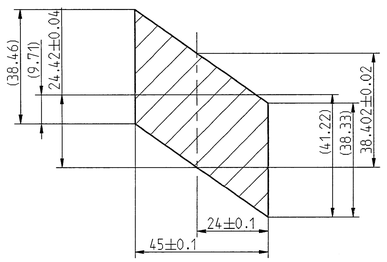

PROFILE TOLERANCES FOR THE PROFILE SECTION A5, A15, A24.

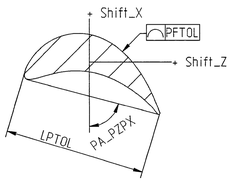

PFTOL	0.25
Shift_X	+0.50 -0.25
Shift_Z	+0.50 -0.25
PA_PZPX	±0.25°
LPTOL	+0.25 -0.50

NOTES:

1. Profile co-ordinates as per drawing No: 0-301-81-00001-00
2. Profile checking sections: A5, A15, A24.
3. Final Machining as per Blading Plan.
4. Total No. of Blade = 70.

Description	No. of Blades	Execution	Var
FLAT 125X80 X20Cr13V HY10764	2	03	03
	68	02	02
	2	01	01
	68	00	00

TYPE OF PRODUCT OR

NAME OF CUSTOMER/PROJECT

	NAME	SIGN	DATE	NO OF VAR
DRN	HARISH		14.05.06	NA
CHD	TS PRABHAKAR		14.05.06	
APPD	CNV RAMANA		14.05.06	

DEPT ITD CODE 415	UNTOL DIMS OR ¢/M/f	SCALE NTS	WEIGHT (KG) 3.7	REF TO ASSY DRG NA	ITEM NO NA	NO OF ITEMS NA

TITLE: LP GUIDE BLADE-2 (SL 2.2 SQM)

CARD CODE

DRAWING NO. 1-301-81-00001 REV 00

SHT No 01 NO OF SHT 01

THE INFORMATION ON THIS NOT BE USED DIRECTLY OF

GENERAL DIMENSIONAL LIMITS,FITS & TOLERANCES AS PER HY0230261

COMPUTER FILE NAME | DRG NO 0-2118-2202-10 | REF | SIGN AND DATE | INVENTORY NO

FIRST ANGLE PROJECTION

(ALL DIMENSIONS ARE IN mm)

DRG NO. 2-303-22-00012-00

DIRECTION OF ROTATION IS ANTICLOCKWISE WHEN IN THE DIRECTION OF STEAM FLOW

STEAM FLOW DIRECTION

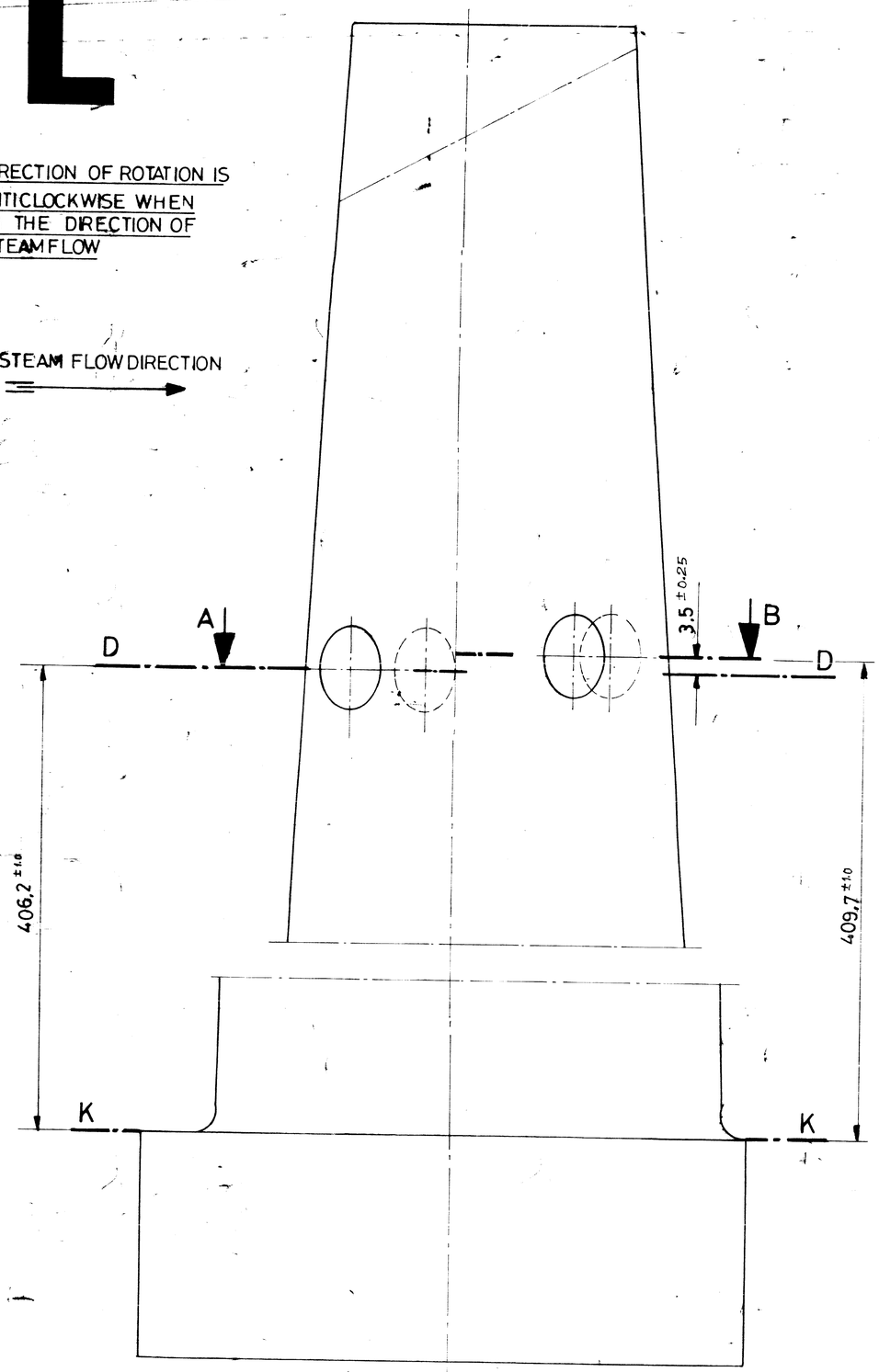

SECTION A-B

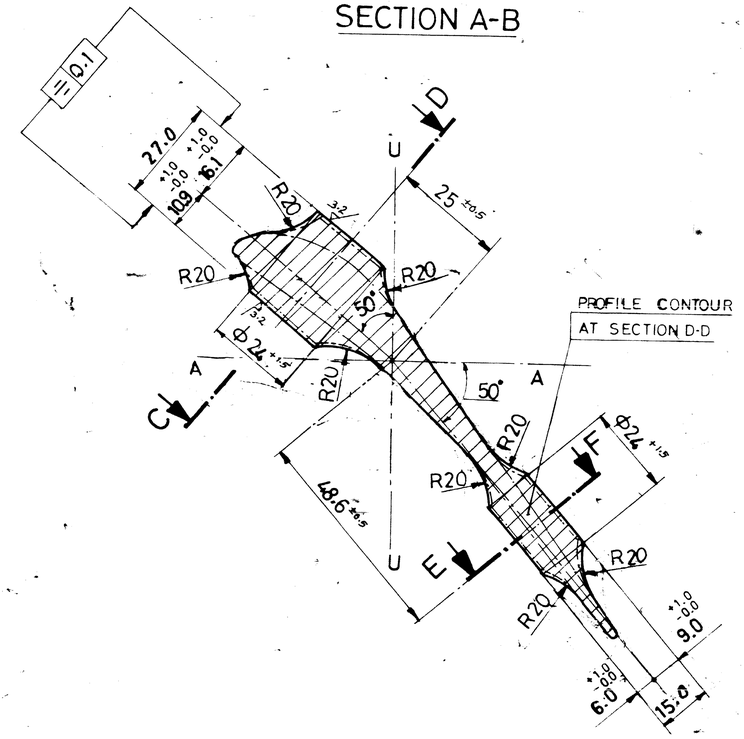

REFER DRG. NOS. FOR

1. BLADE BZ 2-303-22-20001-00 (2-[illegible]02)
2. PROFILE CO-ORD. 3-303-22-00001-00 (19[illegible]) (3-11-4994)
3. D-D CORRESPONDS TO SEC. D-D OF DRG. NO. 3-303-22-0.0001-00

SECTION C-D

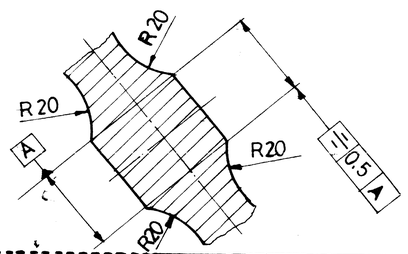

SECTION E-F

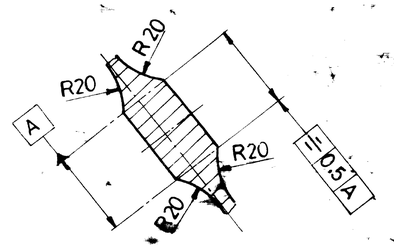

	00
	Var.

VAR 00	REMARKS	VAR. NO.	ITEM NO.	DESCRIPTION	STD.	DRAWING NO.	IT. NO.	MATL CODE	UNIT	UNIT WT.	ZONE
							VAR.	MATL SPECN.		QTY.	

CARD TYPE -3 — CARD TYPE -2 — CARD TYPE -1

ADDITIONAL INFORMATION

STATUS OF DRAWING

DISTRIBUTION OF PRINTS

TYPE OF PRODUCT
OR
NAME OF CUSTOMER/PROJECT

	NAME	SIGN	DATE
DRN.	PRABHAKAR T.S	T.S Prabhakar	2.4.86
CHD.	RAMANA.CNV		2.4.86
APPD.	REDDY.P.N.		2.4.86

REV	DATE	ALT.	CHD	ZONE	DRG. RETRACED SEC. A-B MODIFIED SEC. C-D & E-F ADDED
02	01.02.94				ALLOWANCE ON BOSS DIA. & BOSS FACES ADDED.
01	2.4.86	ALTERED T.S. Prabhakar	CHECKED		

DEPT.	GRADE OF UNTOL. DIM. C/M/F		SCALE	WEIGHT (KG)	REF. TO ASSY. DRG.	ITEM NO.	NO. OF ITEMS
ITD CODE 415			NTS.	-NA-	-NA-		

TITLE
BOSS ON PROFILE
ND 3/562/3.6-III L

CARD CODE

DRAWING NO. 2-303-22-00012-00 REV. 02

SHEET NO. 1 NO OF SHEETS 1

INVENTORY NO. | SIGN AND DATE. | REF. DRG. NO. 0-0500-0096-00

TD-150-REV. NO. 1

SIZE A2

FIRST ANGLE PROJECTION

(ALL DIMENSIONS ARE IN mm)

DRG. NO. 3-107-47-62023 | SH. 04 OF 04

3.2 / 0.8 / 1.6 / 12.5

VAR.	STAGE	QTY/ROW (Incl.J.B)	H	D1	D2	D3	D4	D5	D6	D7	αD DEG.	αD MIN.	γD DEG.	γD MIN.	S1	S2	S3	S4	S5	S6	S7
05	5	148	223.9	216.0	216.2	216.4	67.7	62.5	57.4	148.3	0	−42	17	51	216.3	216.1	216.0	68.1	62.6	57.2	147.9

VAR.	STAGE	αS DEG.	αS MIN.	γS DEG.	γS MIN.	E	øK	øN	øP	øI	L	Z	M	Q	QH	HT	EX (TAPER VALUES FOR JIG LENGTH 1000 *)	EY	EH
05	5	0	32	18	49	51.0	1552	1504	1419	1104.2	29.76	27.21	21.17	8.47	137.0	0.4	8.87	38.08	21.33

(* TAPER VALUE FOR PITCH INCREASE OF 0.40% RELATED TO øI)

TOLERANCES

⌒ 0.15	PROFILE FORM
± 0.15	PROFILE THICKNESS
− 0.40	PROFILE LENGTH
0.45	BLADE BENDING
± 0.30 °	PROFILE ANGLE
± 0.30	S & D DIMENSIONS

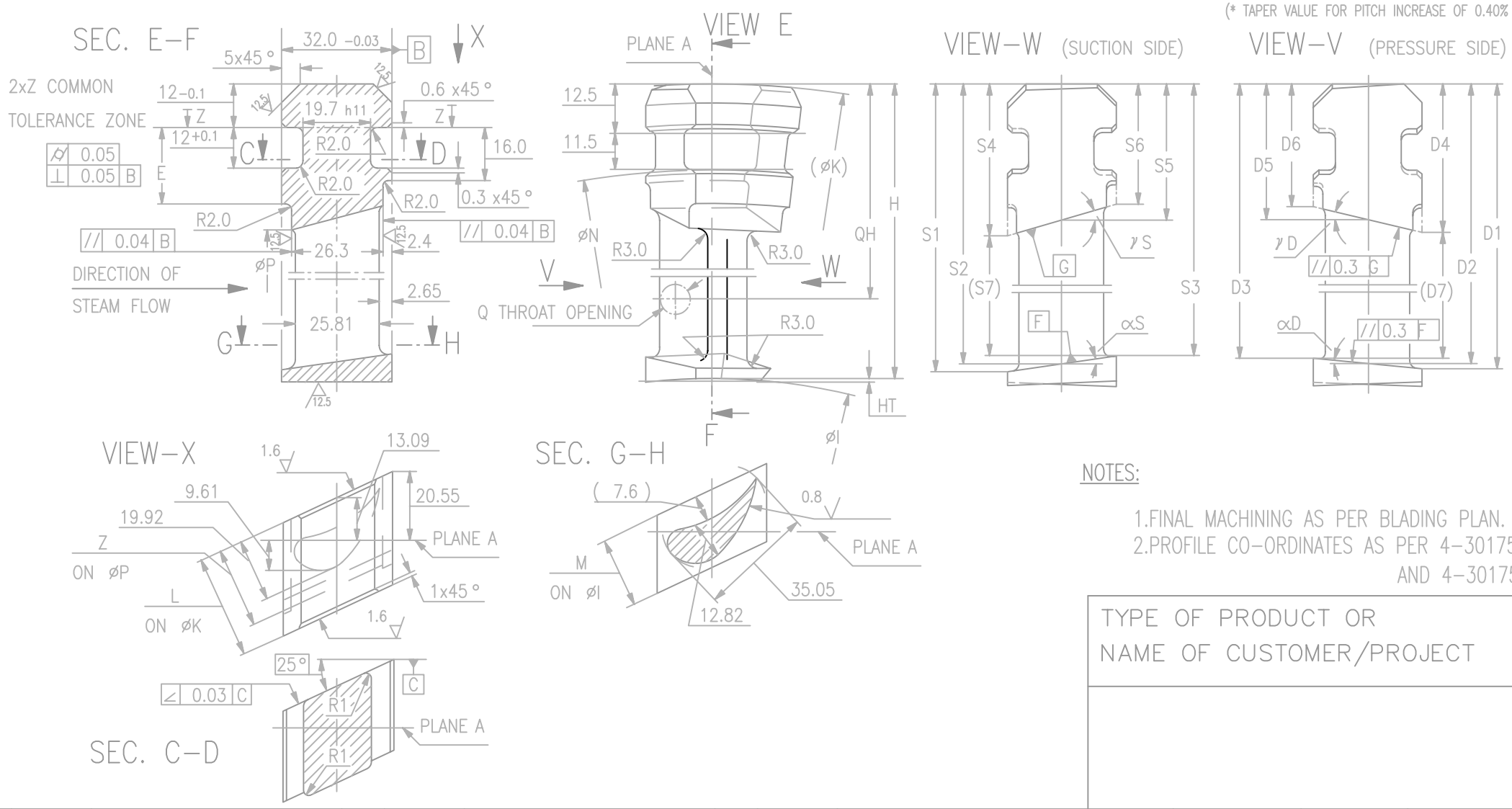

NOTES:

1. FINAL MACHINING AS PER BLADING PLAN.
2. PROFILE CO-ORDINATES AS PER 4-30175-00164-00 AND 4-30175-00168-00

05	5
VAR.	ROW

GENERAL DIMENSIONAL LIMITS, FITS & TOLERANCES AS PER HY0230261

COMPUTER FILE NAME | REF. DRG. NO. | SIGN. AND DATE | INVENTORY NO

TYPE OF PRODUCT OR
NAME OF CUSTOMER/PROJECT

	NAME	SIGN.	DATE	NO.OF VAR.
DRN.	T.V.P. BABU		10.01.96	−N.A.−
CHD.	TS PRABHAKAR		10.01.96	
APPD.	P KODANDARAM		10.01.96	

REV.	DATE	ALTERED CHD/APPD	REV.	DATE	ALTERED CHD/APPD	REV.	DATE	ALTERED CHD/APPD
ZONE			ZONE			ZONE		

DEPT. I.T.D. CODE 415	UNTOL. DIMS. GR. ~~C/M/F~~	SCALE NTS	WEIGHT (KG) −N.A.−	REF. TO ASSY. DRG. −N.A.−	ITEM NO. −N.A.−	NO.OF ITEMS −N.A.−

TITLE: GUIDE BLADE T4-32-53

CARD CODE: N.A.

DRAWING NO. 3-107-47-62023 | REV. 00

SHT. No 04 | NO. OF SHT. 04

FIRST ANGLE PROJECTION

(ALL DIMENSIONS ARE IN mm)

DRG. NO. 3-107-47-62024

SH. 04 OF 04

3.2 / 0.8 / 1.6 / 12.5

VAR.	STAGE	HT	H	E	D1	D2	D3	D4	D5	D6	D7	αD DEG.	αD MIN.	γD DEG.	γD MIN.	S1	S2	S3	S4	S5	S6	S7
05	5	0.5	223.9	51.0	216.0	216.2	216.4	67.7	62.5	57.4	148.3	0	-42	17	51	216.3	216.1	216.0	68.1	62.6	57.2	147.9

VAR.	STAGE	αS DEG	αS MIN.	γS DEG	γS MIN.	øK	øN	øP	øI	L1	L2	L3	L4	L5	L6	L7	L8	L9	RD	SINE BAR VAL. FOR L=1000 (EY) POS 1	POS 2
05	5	0	32	18	49	1552	1504	1419	1104.2	7.8	38.0	11.6	30.5	40.11	48.43	57.85	34.0	40.6	25.4	17.96	76.74

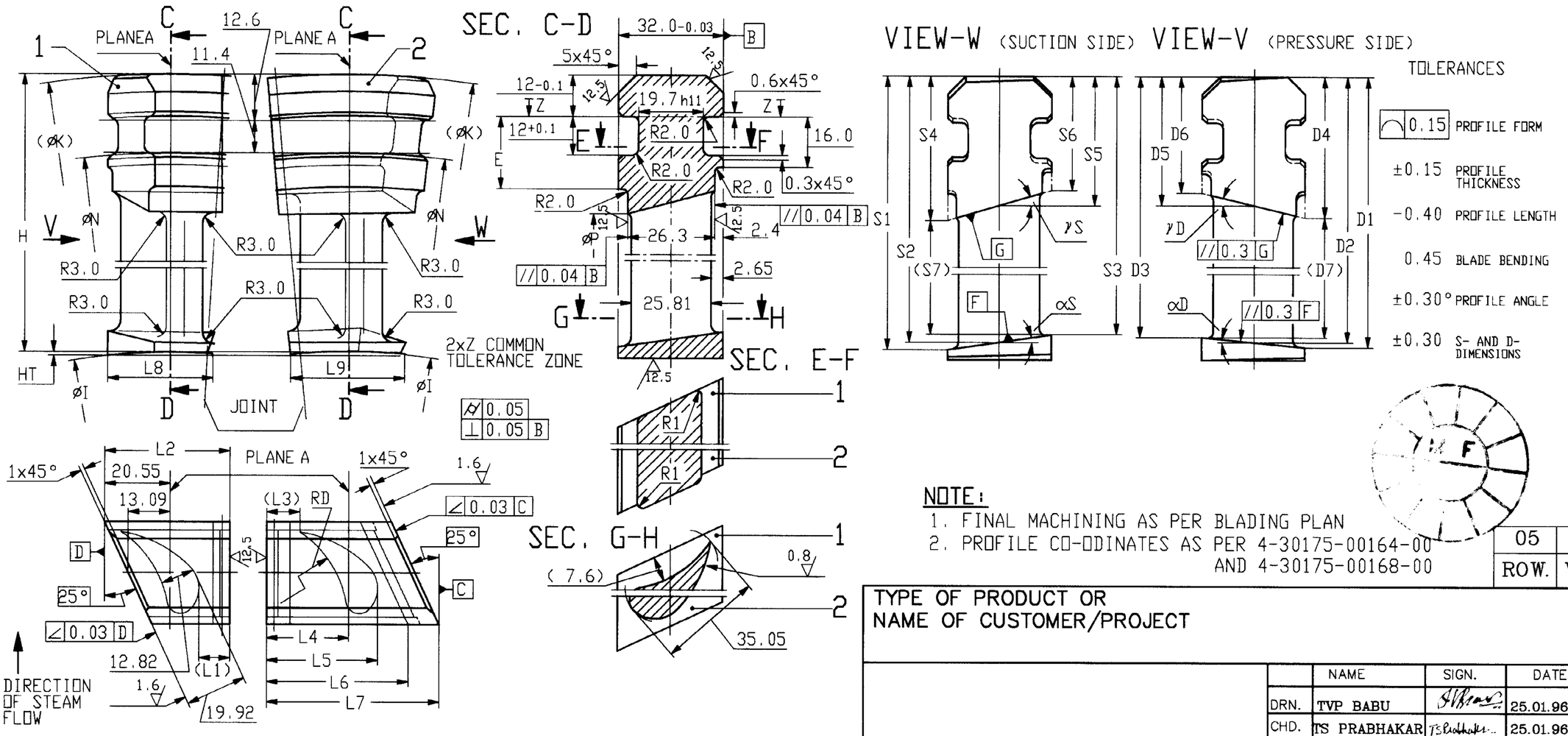

NOTE:
1. FINAL MACHINING AS PER BLADING PLAN
2. PROFILE CO-ODINATES AS PER 4-30175-00164-00 AND 4-30175-00168-00

ROW.	VAR.
05	05

TYPE OF PRODUCT OR NAME OF CUSTOMER/PROJECT

	NAME	SIGN.	DATE	NO.OF VAR.
DRN.	TVP BABU		25.01.96	
CHD.	TS PRABHAKAR		25.01.96	
APPD.	P KODANDARAM		25.01.96	N.A.

REV	DATE	ALTERED CHD/APPD	REV.	DATE	ALTERED CHD/APPD	REV.	DATE	ALTERED CHD/APPD
ZONE			ZONE			ZONE		

DEPT. I.T.D.	UNTOL. DIMS. GR. ~~G/M/F~~		SCALE	WEIGHT (KG)	REF. TO ASSY. DRG.	ITEM NO.	NO.OF ITEMS
CODE 415			N.T.S.	N.A.	-N.A.-	-N.A.-	-N.A.-

TITLE: JOINT BLADE T4-32-53

CARD CODE: N.A.

DRAWING NO. 3-107-47-62024 REV. 00

SHT. No 04 NO. OF SHT. 04

COMPUTER FILE NAME | REF. DRG. NO. | SIGN. AND DATE | INVENTORY NO

TOLERANCES AS PER HY0230261

GENERAL DIMENSIONAL LIMITS, FITS & TOLERANCES

THE INFORMATION ON THIS DOCUMENT IS THE PROPERTY OF NOT BE USED DIRECTLY OR INDIRECTLY IN ANY WAY DETRIMENTAL TO THE INTEREST OF THE COMPANY

FIRST ANGLE PROJECTION

(ALL DIMENSIONS ARE IN mm)

DRG. NO 3-303-19-00026

SH. 01 OF 01

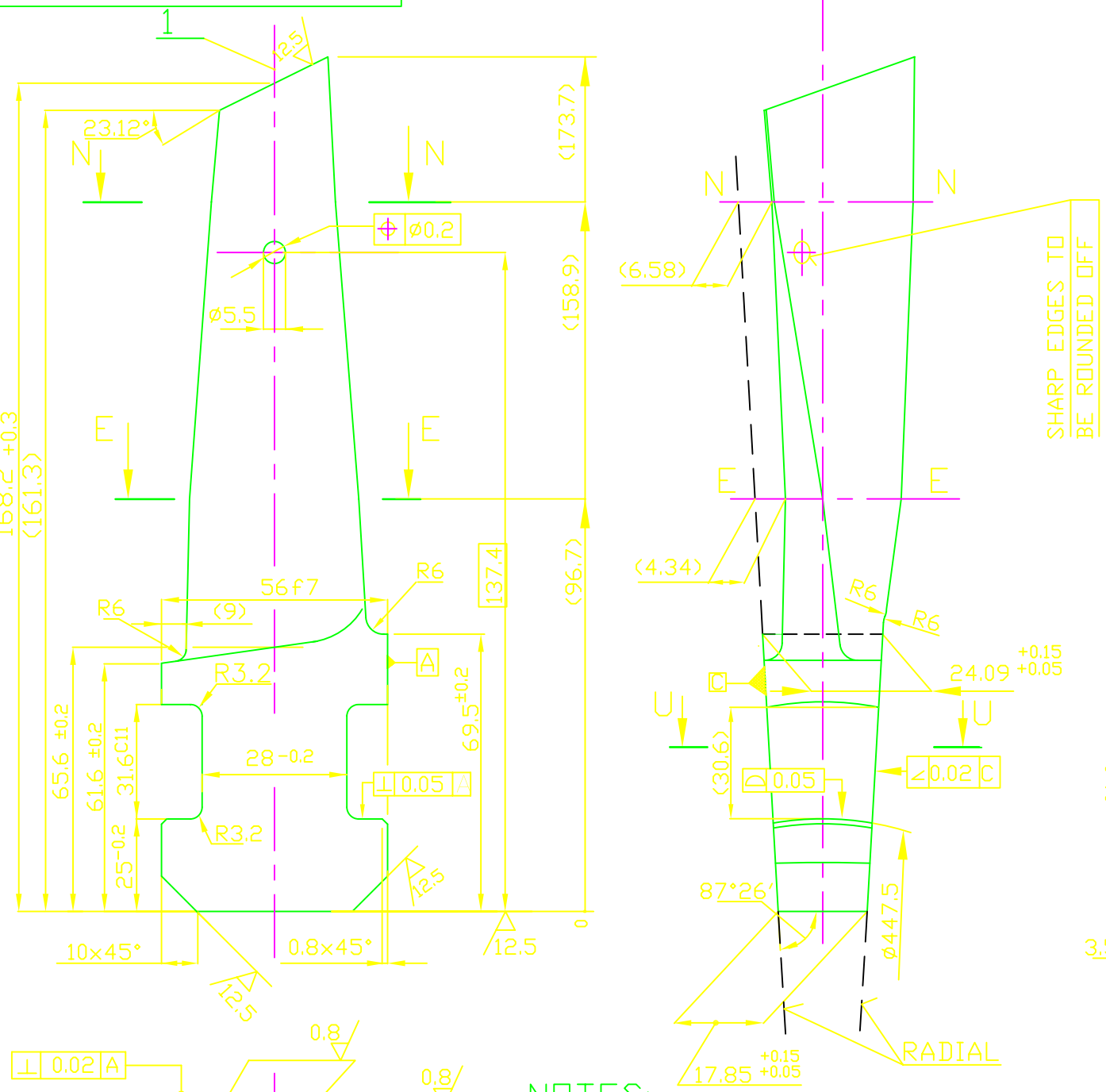

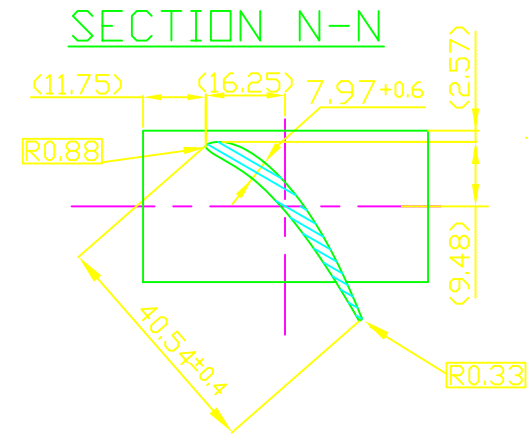

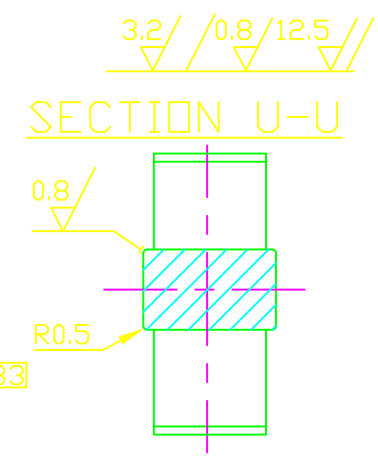

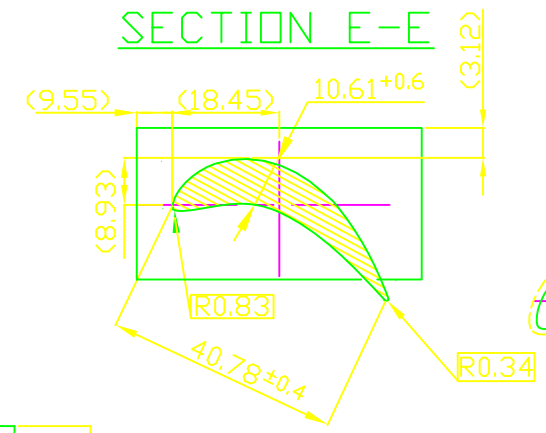

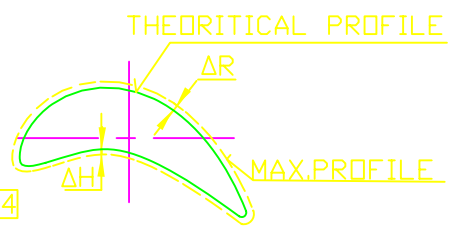

ΔRmax = 0.6mm ΔRmin = 0mm ΔHmax = 0.2mm

ΔHmin = 0mm max difference ΔR= 0.4mm

Σ(ΔR + ΔH)max =0.6mm Σ(ΔR+ΔH)min= 0.2mm

DIRECTION ROTATION IS ANTI-CLOCK WISE WHEN SEEN IN THE DIRECTION OF STEAM FLOW.

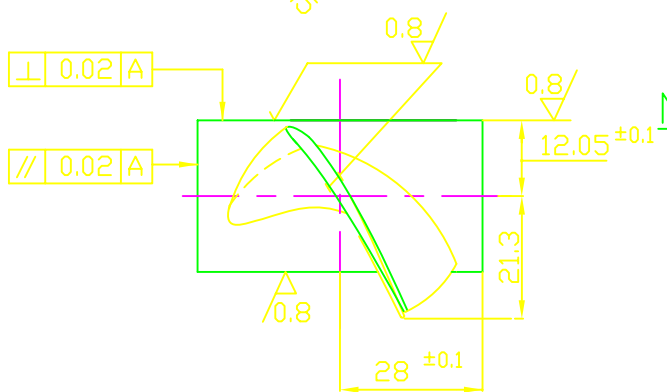

NOTES:

1. PROFILE CO-ORDINATES AS PER DRG.No.2-303-19-00034-00 (1Sh)
2. FINAL MACHINING AS PER BLADING PLAN.
3. MISSING DIMENSIONS OF Pos.No.2. TO BE SEEN IN Pos.No.1.
4. EY VALUE FOR FULL ANGLE = 22.43
   EY VALUE FOR HALF ANGLE = 11.22

FL. 65 x 40	HY10764	0.6	1	2	-00
FL. 65 x 40		0.6	69	1	
DESCRIPTION	Mat. Spc.	Wt.	No.Of Pcs.	POS.	VAR.

TYPE OF PRODUCT OR NAME OF CUSTOMER/PROJECT

	NAME	SIGN.	DATE	NO.OF VAR.
DRN.	TS PRABHAKAR		15.09.2000	-N.A-
CHD.	TS PRABHAKAR		15.09.2000	
APPD.	C.N.V.RAMANA		15.09.2000	

REV.	DATE	ALTERED	CHD/APPD
01	19.11.2004	TS PRABHAKAR	CNV RAMANA

Tolerance on Blade Hieght +0.7 was +1.3
+0.3 +0.8

DEPT. I.T.D. CODE 415 | UNTOL. DIMS. GR. ~~G/M/F~~ | SCALE N.T.S | WEIGHT (KG) -N.A- | REF. TO ASSY. DRG. -N.A.- | ITEM NO. -N.A.- | NO.OF ITEMS -N.A.-

TITLE LP MOVING BLADE SK 57-1 LEFT

CARD CODE N.A.

DRAWING NO. 3-303-19-00026 REV. 01

SHT. No 01 NO. OF SHT. 01

INVENTORY NO | SIGN. AND DATE | REF. DRG. NO. 4-2224-0920-00 | Rev:0 | COMPUTER FILE NAME D3190026.DWG

GENERAL DIMENSIONAL LIMITS,FITS & TOLERANCES AS PER HY0230261

FIRST ANGLE PROJECTION

(ALL DIMENSIONS ARE IN mm)

DRG. NO. 3-303-21-00060

SH. 01 OF 01

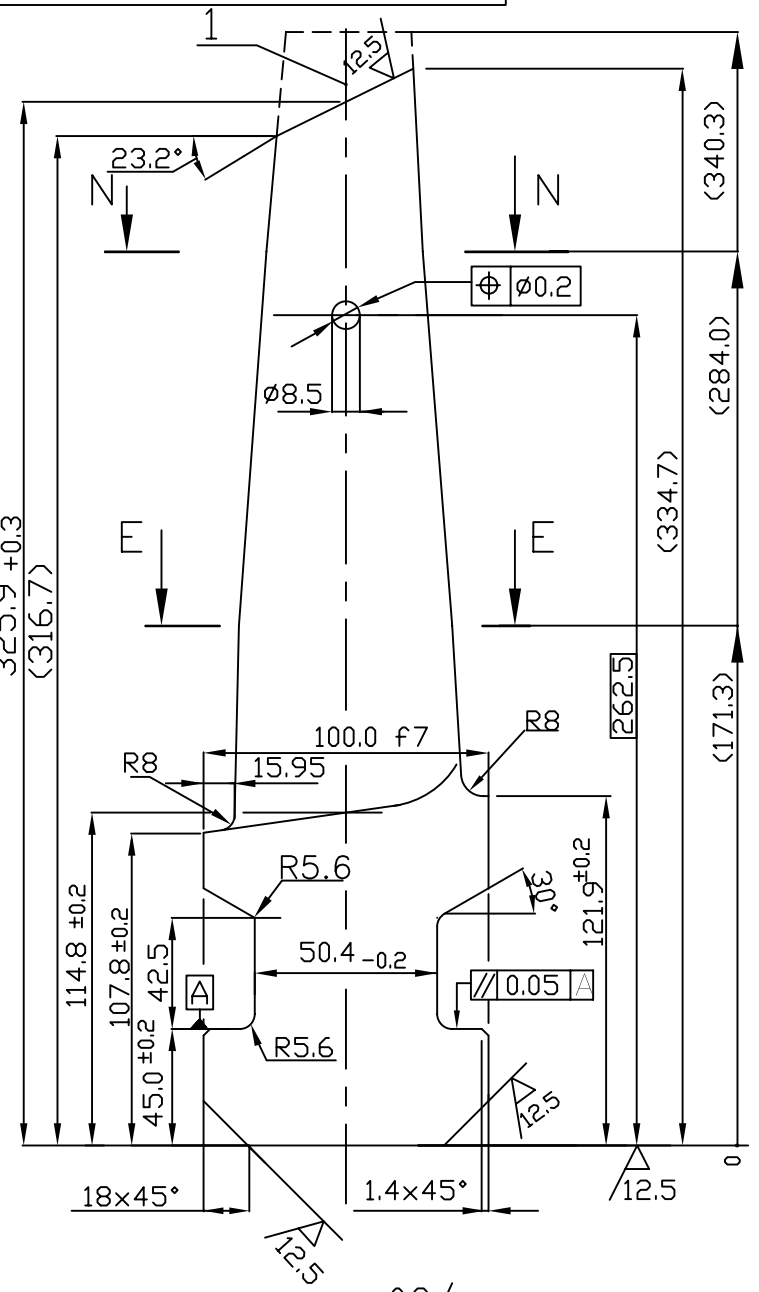

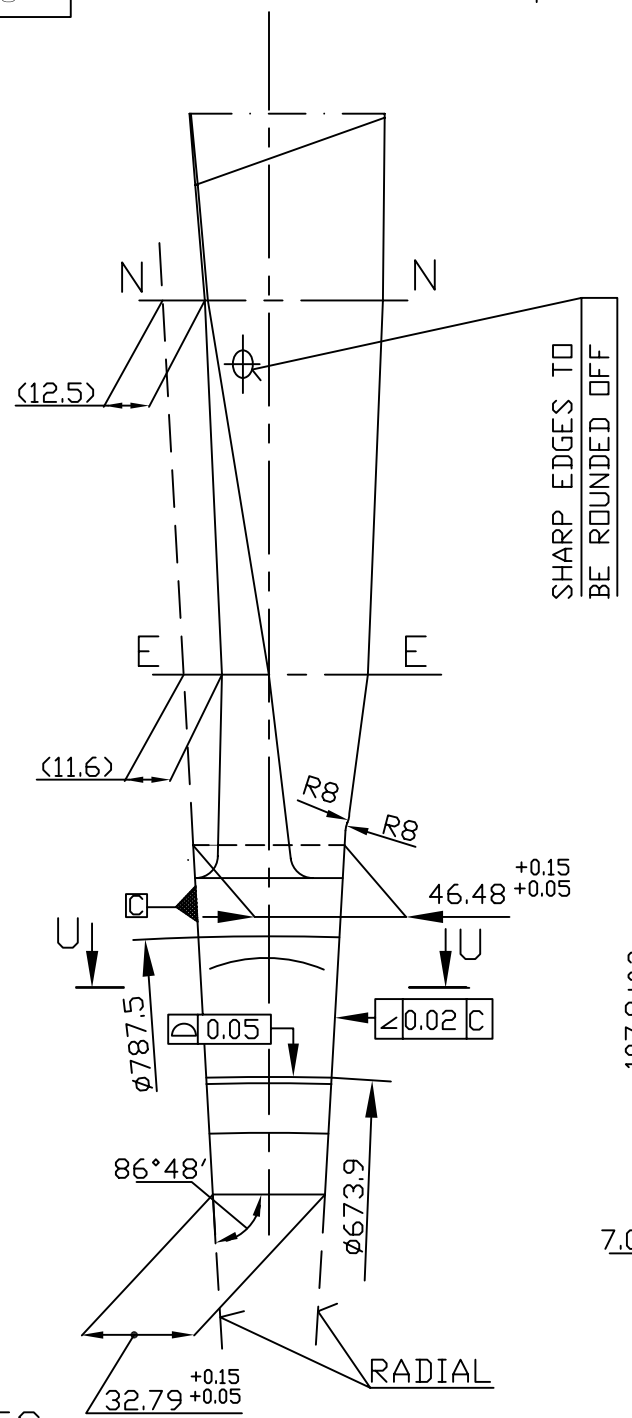

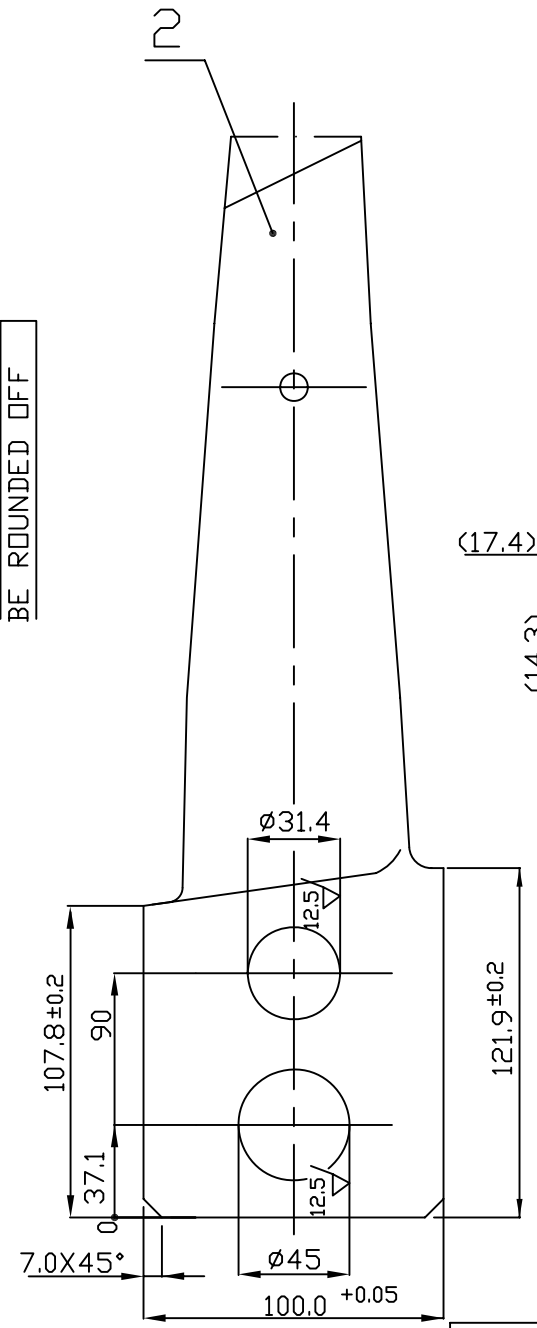

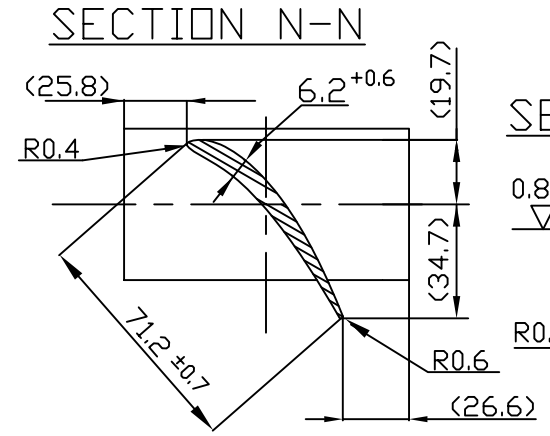

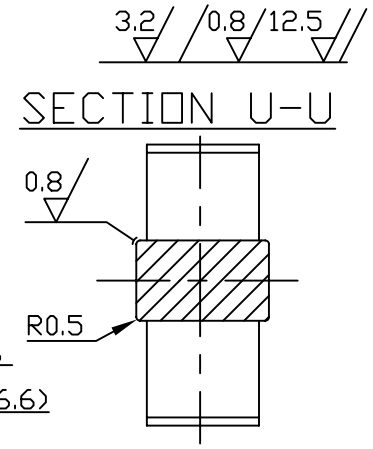

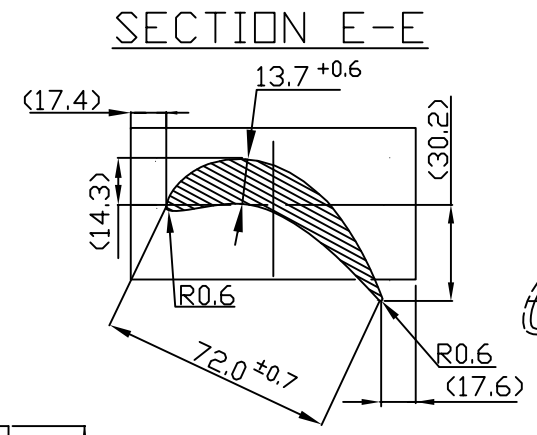

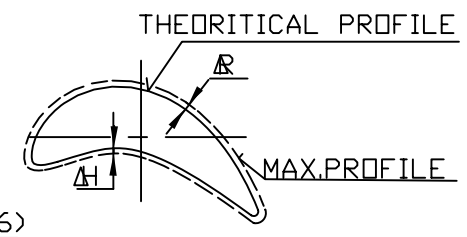

ΔRmax = 0.8 ΔRmin = 0 ΔHmax = 0.2

ΔHmin = 0 max difference ΔR= 0.4

Σ(ΔR + ΔH)max =0.8 Σ(ΔR+ΔH)min= 0.2

DIRECTION ROTATION IS ANTI-CLOCK WISE WHEN SEEN IN THE DIRECTION OF STEAM FLOW.

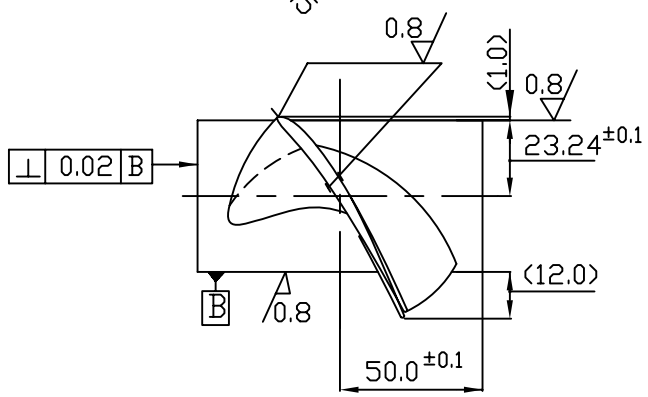

NOTES:

1. PROFILE CO-ORDINATES AS PER DRG.No.1-303-21-00003-00 (2Sh)
2. FINAL MACHINING AS PER BLADING PLAN.
3. MISSING DIMENSIONS OF Pos.No.2. TO BE SEEN IN Pos.No.1.
4. EY FOR FULL ANGLE = 28.02
   EY FOR HLAF ANGLE = 14.03

FL.110 x 75	HY10764	3.35	1	2	-00
FL.110 x 75		3.35	55	1	
DESCRIPTION	Mat. Spc.	Wt.	No.Of Pcs.	POS.	VAR.

TYPE OF PRODUCT OR NAME OF CUSTOMER/PROJECT

	NAME	SIGN.	DATE	NO.OF VAR.
DRN.	T S PRABHAKAR		18.10.2004	-N.A-
CHD.	T S PRABHAKAR		18.10.2004	
APPD.	CNV RAMANA		18.10.2004	

DEPT. I.T.D.	UNTOL. DIMS. GR. ~~C/M/F~~		SCALE N.T.S	WEIGHT (KG) -N.A-	REF. TO ASSY. DRG. -N.A.-	ITEM NO. -N.A.-	NO.OF ITEMS -N.A.-
CODE 415							

TITLE LP MOVING BLADE SK 80-2 LEFT

CARD CODE N.A.

DRAWING NO. 3-303-21-00060 REV. 00

SHT. No 01 NO. OF SHT. 01

REV.	DATE	ALTERED CHD/APPD	REV.	DATE	ALTERED CHD/APPD	REV.	DATE	ALTERED CHD/APPD
ZONE			ZONE			ZONE		

INVENTORY NO | SIGN. AND DATE | REF. DRG. NO. 4-2234-1905-00 | REV: E | COMPUTER FILE NAME

GENERAL DIMENSIONAL LIMITS, FITS & TOLERANCES AS PER HY0230261

COPYRIGHT AND CONFIDENTIAL
The information on this document is the property of BHARAT HEAVY ELECTRICALS LIMITED, It must not be used directly or indirectly in any way detrimental to the interest of the company.

COMPRESSOR BLADES (R-17) DRG NOTES

NOTES:

1. PROCESS PER ITEM GT10083.

2. PRECISION MASTER DEFINES THE AIRFOIL CONTOUR.AN APPROVED REPRODUCTION ON STABLE MATERIAL SHALL BE USED IN PRODUCTION AND INSPECTION OF THIS PIECE.

3. FOR AIRFOIL DATA SEE GT10357 (COORDINATE POINTS).

4. BLADE THICKNESS FROM THE LINE INDICATED TO THE DOVETAIL PLATFORM MAY BE TAPERED.THE TAPER IS TO BE UNIFORM ON BOTH SIDES OF THE BLADE AND THICKNESS NOT TO EXCEED MAXIMUM BLADE THICKNESS BY 0.37mm AT DOVETAIL PLATFORM.

5. A FULL RADIUS AT THE INTERSECTION OF THE BLADE AND DOVETAIL PLATFORM MAY NOT BE POSSIBLE IN SOME AREAS. IN THESE AREAS, THE RADIUS SHALL INTERSECT THE PLANE OF THE DOVETAIL PLATFORM AND THE EDGE OF THE DOVETAIL NECK.

6. INSPECT AIRFOIL LEADING EDGE PER GT10128.

7. A CENTER IS PERMISSIBLE ON BOTH TOP AND BOTTOM OF BLADE. ON TIP OF BLADE, THE HOLE SHOULD BE NO LARGER THAN THAT WHICH ALLOWS A MINIMUM OF 0.75mm FROM THE EDGE OF THE HOLE TO THE SIDE OF THE BLADE.THE CENTER HOLE SHOULD BE NO LARGER THAN 3mm DIA. AND 3mm DEEP.THE SAME CENTER HOLE IS PERMISSIBLE ON THE DOVETAIL END.

8. CHECK BLADE SECTION CONTOURS AT THOSE HEIGHT LABELLED "CHECK SECTION "

9. WHEN CHECKING BLADE PROFILE,IMAGE MUST BE REGISTERED WITH NOSE RADIUS CENTER ZEROED OUT AND TRAILING EDGE CENTERED WITHIN 5% OF NOMINAL CHORD. AN ACCEPTABLE PROFILE WILL FALL WITHIN THE TOLERANCE LIMITS IN A UNIFORM MANNER.

10. TOLERANCE VARIES AS FOLLOWS :

    A) BETWEEN TRAILING EDGE AND LINE CJ THE MIN. TOL. TO REMAIN CONSTANT.

    B) BETWEEN TRAILING EDGE AND LINE CJ THE MAX.TOL. TO INCREASE IN PROPORTION TO THE DISTANCE ALONG PROFILE LINE.

COPYRIGHT AND CONFIDENTIAL
The information on this document is the property of BHARAT HEAVY ELECTRICALS LIMITED, It must not be used directly or indirectly in any way detrimental to the interest of the company.

COMPRESSOR BLADES (R-17) DRG NOTES

NOTES:

1. PROCESS PER ITEM GT10083.

2. FOR PRECISION MASTER DEFINES THE AIRFOIL CONTOUR.AN APPROVED REPRODUCTION ON STABLE MATERIAL SHALL BE USED IN PRODUCTION AND INSPECTION OF THIS PIECE.

3. FOR AIRFOIL DATA SEE GT10357 (COORDINATE POINTS).

4. BLADE THICKNESS FROM THE LINE INDICATED TO THE DOVETAIL PLATFORM MAY BE TAPERED.THE TAPER IS TO BE UNIFORM ON BOTH SIDES OF THE BLADE AND THICKNESS NOT TO EXCEED MAXIMUM BLADE THICKNESS BY 0.38 mm AT DOVETAIL PLATFORM.

5. A FULL RADIUS AT THE INTERSECTION OF THE BLADE AND DOVETAIL PLATFORM MAY NOT BE POSSIBLE IN SOME AREAS. IN THESE AREAS, THE RADIUS SHALL INTERSECT THE PLANE OF THE DOVETAIL PLATFORM AND THE EDGE OF THE DOVETAIL NECK.

6. INSPECT AIRFOIL LEADING EDGE PER GT10128.

7. A CENTER IS PERMISSIBLE ON BOTH TOP AND BOTTOM OF BLADE. ON TIP OF BLADE, THE HOLE SHOULD BE NO LARGER THAN THAT WHICH ALLOWS A MINIMUM OF 0.75mm FROM THE EDGE OF THE HOLE TO THE SIDE OF THE BLADE.THE CENTER HOLE SHOULD BE NO LARGER THAN 3mm DIA. AND 3mm DEEP.THE SAME CENTER HOLE IS PERMISSIBLE ON THE DOVETAIL END.

8. CHECK BLADE SECTION CONTOURS AT THOSE HEIGHT LABELLED "CHECK SECTION "

9. WHEN CHECKING BLADE PROFILE,IMAGE MUST BE REGISTERED WITH NOSE RADIUS CENTER ZEROED OUT AND TRAILING EDGE CENTERED WITHIN 5% OF NOMINAL CHORD. AN ACCEPTABLE PROFILE WILL FALL WITHIN THE TOLERANCE LIMITS IN A UNIFORM MANNER.

10. TOLERANCE VARIES AS FOLLOWS :

    A) BETWEEN TRAILING EDGE AND LINE CJ THE MIN. TOL. TO REMAIN CONSTANT.

    B) BETWEEN TRAILING EDGE AND LINE CJ THE MAX.TOL. TO INCREASE IN PROPORTION TO THE DISTANCE ALONG PROFILE LINE.

NOTES, GT COMPR ROTOR BLADES MFG

NOTES:

1. PROCESS PER ITEM 4.

2. AN APPROVED REPRODUCTION ON STABLE MATERIAL SHALL BE USED IN PRODUCTION AND INSPECTION OF THIS PIECE.

3. FOR AIRFOIL DATA SEE ITEM 3 (COORDINATE POINTS).

4. BLADE THICKNESS FROM THE LINE INDICATED TO THE DOVETAIL PLATFORM MAY BE TAPERED. THE TAPER IS TO BE UNIFORM ON BOTH SIDES OF THE BLADE AND THICKNESS NOT TO EXCEED MAX. BLADE THICKNESS BY +0.38 AT DOVETAIL PLATFORM.

5. A FULL RADIUS AT THE INTERSECTION OF THE BLADE AND DOVETAIL PLATFORM MAY NOT BE POSSIBLE IN SOME AREAS. IN THESE AREAS, THE RADIUS SHALL INTERSECT THE PLANE OF THE DOVETAIL PLATFORM AND THE EDGE OF THE DOVETAIL NECK.

6. THESE POINTS TO FORM A SMOOTH CURVE.

7. A CENTER IS PERMISSIBLE ON BOTH TOP AND BOTTOM OF BLADE. ON TIP OF BLADE, THE HOLE SHOULD BE NO LARGER THAN THAT WHICH ALLOWS A MINIMUM OF 0.76 FROM THE EDGE OF THE HOLE TO THE TOP OF THE BLADE. THE CENTER HOLE SHOULD BE NO LARGER THAN 3.18 DIA. AND 3.18 DEEP. THE SAME CENTER HOLE IS PERMISSIBLE ON THE DOVETAIL END.

8. CHECK BLADE SECTION CONTOURS AT THOSE HEIGHTS LABELLED "CHECK SECTION".

9. WHEN CHECKING BLADE PROFILE, IMAGE MUST BE REGISTERED WITH NOSE RADIUS CENTER ZEROED OUT AND TRAILING EDGE CENTERED WITHIN 5% OF NOMINAL CHORD AN ACCEPTABLE PROFILE WILL FALL WITHIN THE TOLERANCE LIMITS IN A UNIFORM MANNER.

10. TOLERANCE VARIES AS FOLLOWS:

    A) BETWEEN TRAILING EDGE AND LINE CJ THE MIN. TOL. TO REMAIN CONSTANT.

    B) BETWEEN TRAILING EDGE AND LINE CJ THE MAX. TOL. TO INCREASE IN PROPORTION TO THE DISTANCE ALONG PROFILE LINE.

    C) BETWEEN THE LINE CJ AND THE NOSE, TOL. TO DECREASE IN PROFILE THICKNESS to NRT AT NOSE.

11. AIRFOIL AVERAGE SURFACE FINISH 25AA. FOR DETAILS OF SURFACE FINISH, SEE ITEM 4.

12. INSPECT AIRFOIL LEADING EDGE PER ITEM 5.

COPYRIGHT AND CONFIDENTIAL
The Information on this document is the property of BHARAT HEAVY ELECTRICALS LIMITED.
It must not be used directly or indirectly in any way detrimental to the interest of the company.