First Angle Projection

All dimensions in 'mm'

DRG.No.14632150039

The information on this document is the property of Bharat Heavy Electricals Limited. It must not be used directly or indirectly in any way detrimental to the interest of the company

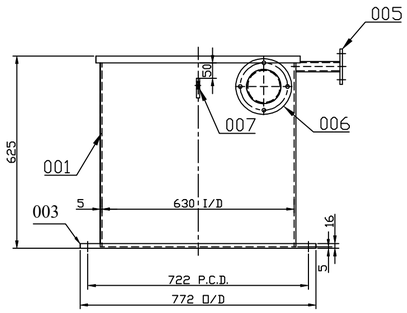

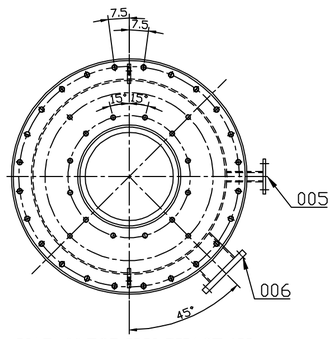

VAR. 00 FOR H.V. PHASE-1U

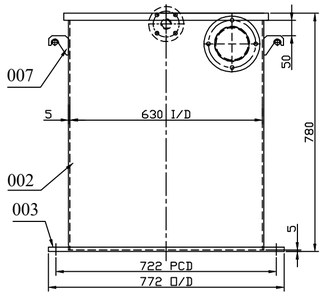

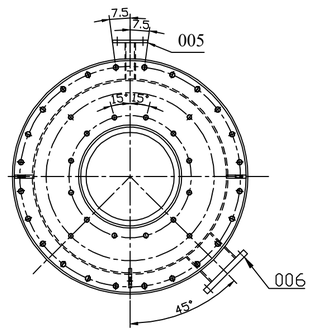

VAR. 01 FOR H.V. PHASE-1V

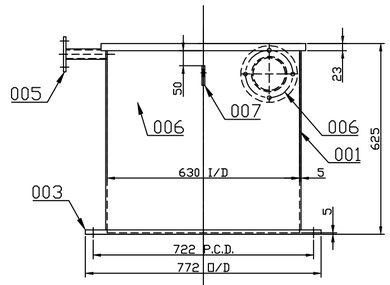

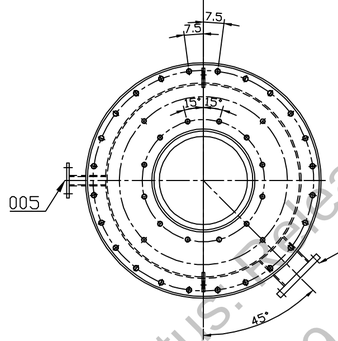

VAR. 02 FOR H.V. PHASE-1W

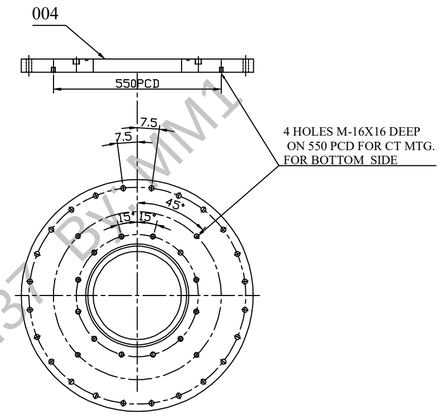

DETAIL-B

DIMNS. TABLE - A

IT. NO.	A	B	C	D	D4	E	G	N	N2	P	P2	S°	T	T1	Q°	M	Z	X	Y
003	644	772	24	18	--	--	--	--	--	722	--	--	16	15	7.5	--	--	--	--
004	290	670	400	--	--	340	--	12	--	18	--	7.5	--	--	15	16	--	--	--
009	--	--	--	--	18	--	772	--	24	--	722	7.5	--	--	--	--	--	--	--
010	772	672	722	18	--	--	--	24	--	--	--	--	6	--	7.5	--	--	--	--
013	--	--	--	--	20	--	450	--	12	--	400	15	--	--	--	--	16	--	--

APPROXIMATE WEIGHTS & VOLUME

VAR. NO.	WT. IN KGS.	VOLUME IN LTRS.
VAR.00	121.130	195.000
VAR.01	136.880	243.000
VAR.02	121.130	195.000
VAR.03	38.330	--
VAR.04	41.930	--
VAR.05	38.330	--
TOTAL	497.730	533.000

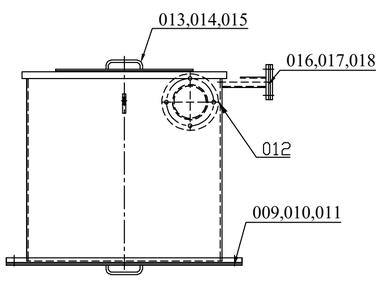

VAR. 03 FOR H.V. PHASE-1U
VAR. 05 FOR H.V. PHASE-1W

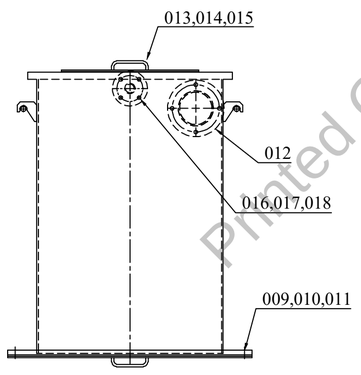

VAR. 04 FOR H.V. PHASE-1V

NOTES:-

1. ALL WELDS TO BE 5 DELTA UNLESS OTHER WISE STATED.
2. FOR PAINTING INSTRUCTION REFER TOP TANK ASSY. DRG. NO. 04631650032.
3. FOR GENERAL NOTES REFER DRG. NO. 14991500007
4. QTY. CALLED IN B.O.M. IS FOR ONE ASSY. ONLY.
5. FLATNESS OF MACHINED SURFACE MUST BE MAINTAIND WITHIN THE TOLERANCE OF ±0.25MM
6. FOLLOWING IS TO PAINTED ON TURRET BEFORE DISPATCH NEW GASKETS AND SEQUENTIAL TIGHTENING SHALL BE ENSURED ON ERECTION.
7. VAR.00 IS H.V. TURRET ASSY. FOR PHASE 1V.
8. VAR.01 IS H.V. TURRET ASSY. FOR PHASE 1U.
9. VAR.02 IS H.V. TURRET ASSY. FOR PHASE 1W.
10. VAR.03 IS BLANKING & FITTING OF H.V. TURRET ASSY. FOR PHASE 1U.
11. VAR.04 IS BLANKING & FITTING OF H.V. TURRET ASSY. FOR PHASE 1V.
12. VAR.05 IS BLANKING & FITTING OF H.V. TURRET ASSY. FOR PHASE 1W.

FOR B.O.M REFER E-B.O.M OF DRG.NO- 1 463 21 50 039.

ADDITIONAL INFORMATION
72589A17200

STATUS OF DRAWING

DISTRIBUTION OF PRINTS

TRE	PPC	DAY 1&2	DAY 3,4&5	DAY 6&7	DAY 8	DAY 9	LMW	Other
								0

TYPE OF PRODUCT OR 160 MVA,220/132/11 KV AUTO TRFR

NAME OF CUSTOMER/PROJECT M/S:- UPPTCL

BHARAT HEAVY ELECTRICALS LTD. JHANSI

	NAME	SIGN	DATE
DRN	RLL1		03/09/2020
CHD	SKS		04/09/2020
APPD	SHJ		11/09/2020

NO. OF VAR

REV	DATE	ALTERED	CHECKED	APPROVED
01	27/11/2020	RCS2	SKS	SHJ

DEPT-TRE
CODE-406

UN TOL. DIM. C/M/F

SCALE

WEIGHT [KG]

REF. TO ASSY. NO.

ITEM NO

NO. OF ITEM

ZONE

IN BOM.&DRG.IT,NO,06 &012 QTY.MODIFIED.

TITLE
HV. TURRET ASSY.

DRAWING NO. 14632150039

REV. 01

SHT NO 1 NO OF SHT 1

SIGN AND DATE

REF. DRG. NO.

INVENTORY NO.

SIGNATURE NOT REQUIRED AS IT IS SYSTEM GENERATED DRAWING

SIZE A1

Status: Released
Printed On: 2021-11-09 11:52:37 By: MM1