First Angle Projection

All dimensions in 'mm'

DRG.No.04635150024

The information on this document is the property of Bharat Heavy Electricals Limited. It must not be used directly or indirectly in any way detrimental to the interest of the company

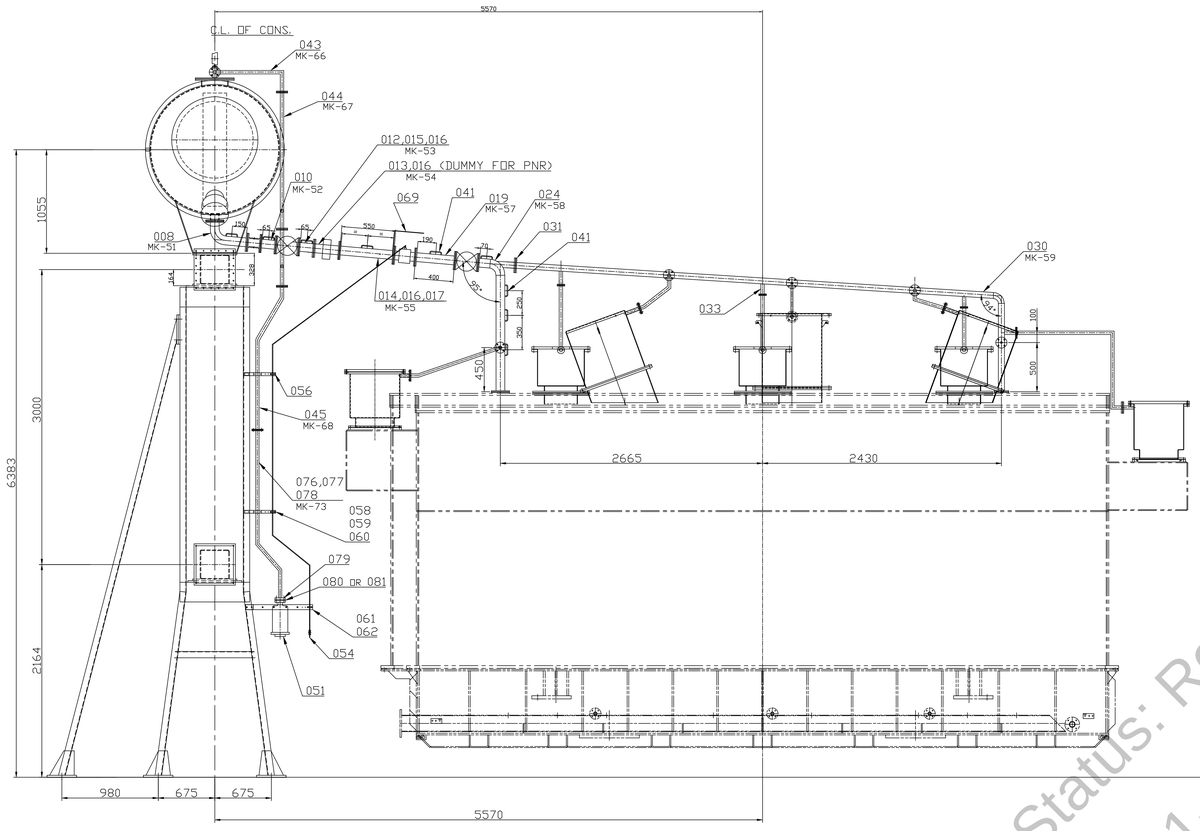

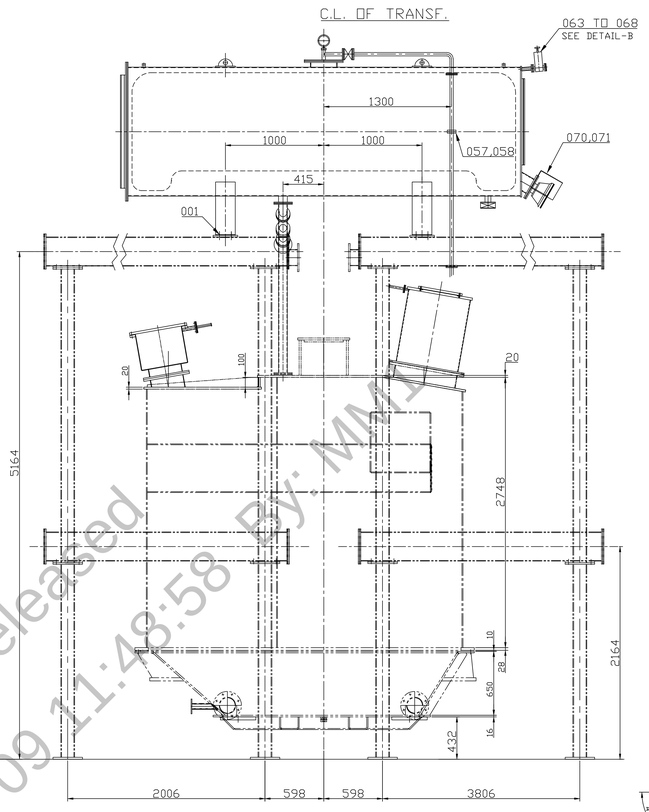

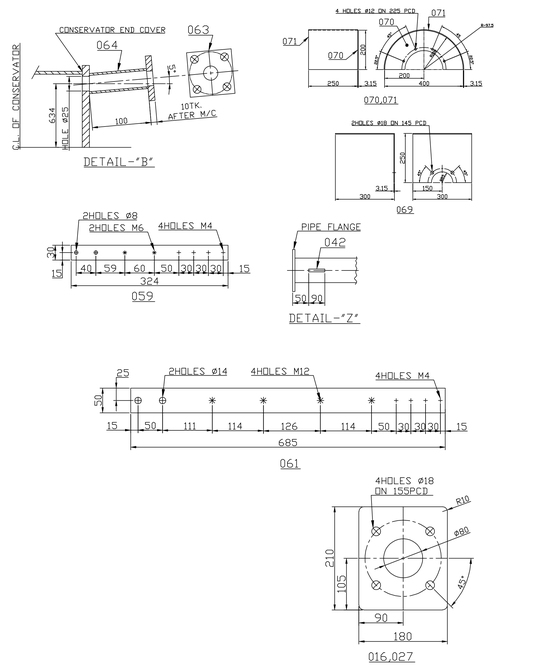

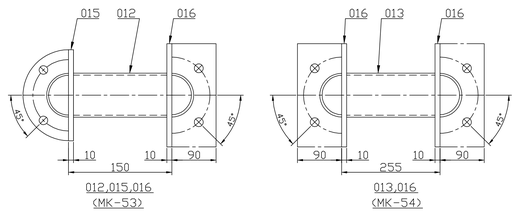

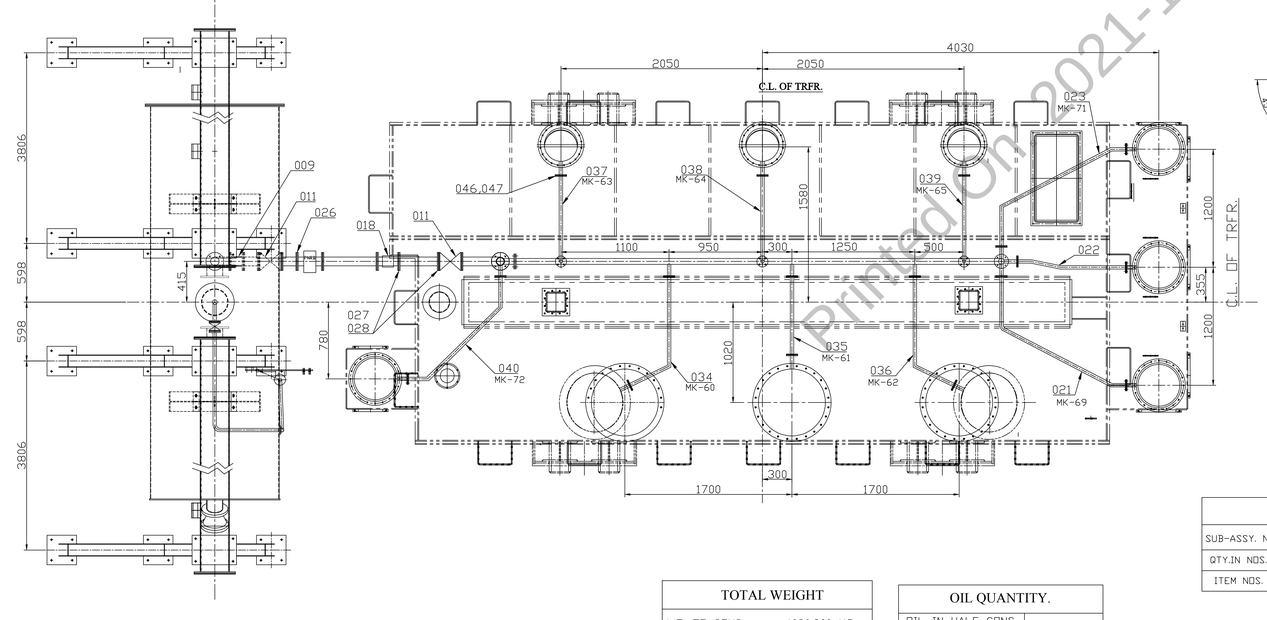

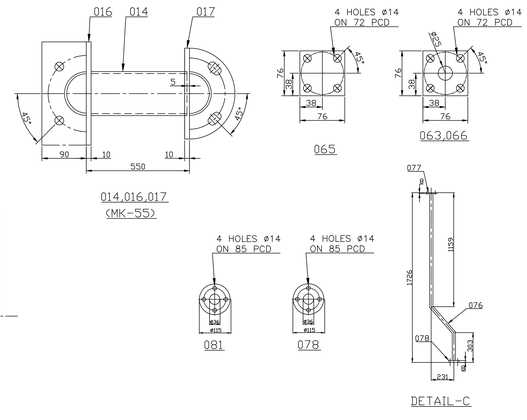

NOTES:-

1. FOR GENERAL NOTES REFER DRG. NO. 34994750005.
2. ALL WELDS TO BE CONTINOUS 5△ UNLESS OTHERWISE STATED.
3. FOR GENERAL TOLERANCE REFER DRG. NO. 34990050012 GRADE-C.
4. FOR GENERAL WELDING REFER DRG. NO. 14991600002 & 04991500008.
5. FOR SHOT BLASTING & PAINTING INSTRUCTION REFER TOP TANK ASSY. DRG. NO. 04631650032.
6. ALL PIPE SUB ASSY. MARKED THUS MK/TRANSF. SRL. NO. SHOULD BE PUNCHED ON IT. 042 SET WISE BEFORE DISPATCH TO FACILITATE IDENTIFICATION FOR ERECTION AT SITE i.e. MK-01/20460-- MEANS SUB ASSY. NO. MK-01 FOR TRANSFORMER SRL. NO. 20460--.
7. SLOPE OF 80N.B. PIPE IS 5° & 50N.B. PIPE IS 3° AND 25N.B. PIPE APPROACHING TO 50N.B. IS 3°.
8. ADAPTOR ASSY. IT.007 IS REQUIRED AT THE TIME OF AIR FILLING IN AIR CELL IT. 006 AT OUR WORKS AND CUSTOMER'S SITE.

TOTAL WEIGHT	
WT. OF CONS.	= 1080.800 KG.
WT. OF STEEL PART	= 359.200 KG.
TOTAL	= 1440.00 KG.

OIL QUANTITY.	
OIL IN HALF CONS. LTRS.	2655 LTRS.
OIL IN PIPE WORK	125 LTRS.
TOTAL OIL	2780 LTRS.

TABLE FOR SUB-ASSY.

SUB-ASSY. NO.	MK-51	MK-52	MK-53	MK-54	MK-55	MK-56	MK-57	MK-58	MK-59	MK-60	MK-61	MK-62	MK-63	MK-64	MK-65	MK-66	MK-67	MK-68	MK-69	MK-70	MK-71	MK-72	MK-73
QTY.IN NOS.	001	001	001	001	001		001	001	001	001	001	001	001	001	001	001	001	001	001	001	001	001	001
ITEM NOS.	008	010	012,015 &016	013,016	014,016 &017		019	024	030	034	035	036	037	038	039	043	044	045	021	022	023	040	076,077 078

TABLE-1 FOR DIMNS. OF CONSR. TO DRG. NO. 14993900010 VAR.-03

A	B	C	C1	D	D1	E	G	L	M	N	N1	N2	FIG	POSITION
4000	2415	1000	1000	2000	2000	995	2500	3995	8	25	00	01	02	R, Y & 03

FOR B.O.M. REFER E-BOM NO. 04635150024.

ADDITIONAL INFORMATION 72589A17200

STATUS OF DRAWING

DISTRIBUTION OF PRINTS

INC	PPC	INV 1&2	INV 1.&2.	INV 3	INV 4	INV 5	LMW	Drawf
1	1					4		0

TYPE OF PRODUCT OR 160 MVA,220/132/11 KV AUTO TRFR

NAME OF CUSTOMER/PROJECT M/S:- U.P.P.T.C.L.

BHARAT HEAVY ELECTRICALS LTD. JHANSI

	NAME	SIGN	DATE
DRN	TRC		25/08/2020
CHD	SKS		25/08/2020
APPD	SHJ		22/08/2020

NO. OF VAR

DEPT-TRC CODE-406 | UN.TOL. DIM. C/M/F | SCALE | WEIGHT (KG) | REF. TO ASSY. NO. | ITEM NO | NO. OF ITEM

TITLE MAIN CONSERVATOR PIPE WORK ASSY

DRAWING NO. 04635150024 REV. 02

SHT NO | NO OF SHT

REV	DATE	ALTERED	CHECKED	APPROVED	ZONE
01	22.8.2020	IT.020 & 055 DELETED. IT.069,017,018 & 056 QTY. MODIFIED. IT.014 MODIFIED.			
02	26/07/2021	IT.NO.078,081& DETAIL-C MODIFIED.	TRC	SKS	SHJ

REF. DRG. NO. | SIGN AND DATE | INVENTORY NO.

SIGNATURE NOT REQUIRED AS IT IS SYSTEM GENERATED DRAWING

SIZE A0

Status: Released
Printed On: 2021-11-09 11:48:58 By: MMM