First Angle Projection

All dimensions in 'mm'

DRG.No.04631950026

The information on this document is the property of Bharat Heavy Electricals Limited. It must not be used directly or indirectly in any way detrimental to the interest of the company

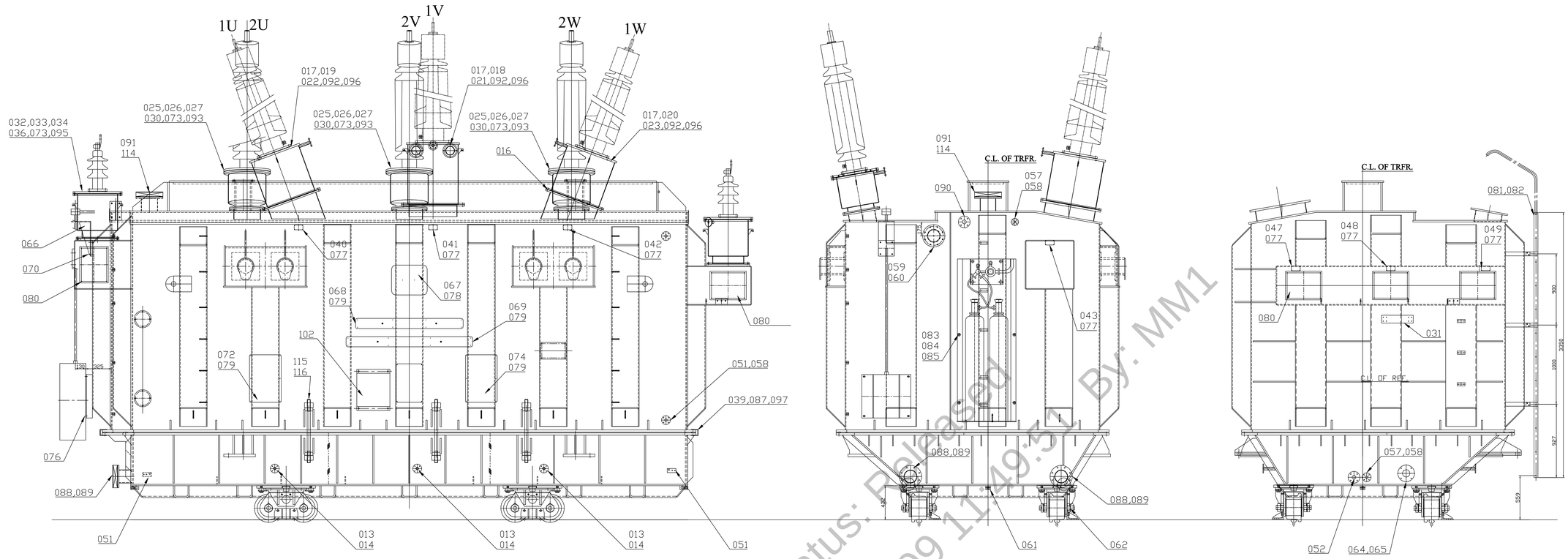

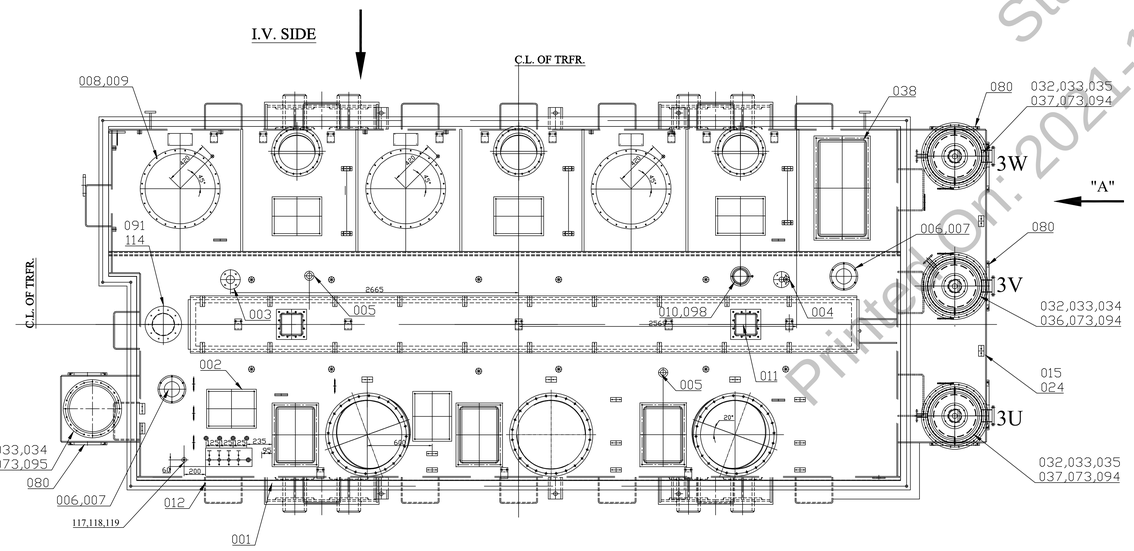

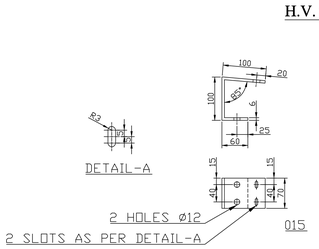

TABLE-B

ITEM	L	N	M	P	F	G	J	K	Q	R	X	A	B	C	D	Y
038	11	6	84	80	964	520	20	20	924	480	34	1042	442	838	394	762

TABLE-A OF DIMNS. FOR LADDER ASSY. TO DRG.04561950077. VAR-00

A	B	C	D	E	F	H	M	N	H1	H2	H3	H4	H5	H6	K	K1	K2	K3	K4	K5
3350	927	1000	900	150	NOT REQD.	559	6	11	750	800	1158	340	1475	400	400	362	300	460	961	762

NOTE:- ITEM. 011 NOT REQD.

NOTES: -

1. ALL HARDWERES ARE TO BE M-10 BELOW OF S. S. AND M-12 ABOVE HDG.
2. FOR ALL OTHER NOTES AND FOR PAINTING OF BLANKING PLATE WITH ALL OTHER STEEL PARTS REFER TOP TANK ASSY. DRG. NO. 04631650032.
3. FOR GENERAL TOLERANCE REFER DRG. NO. 34990050012 GRADE -C.
4. FOLLOWING IS TO BE PAINTED ON TURRET BEFORE DISPATCH-*NEW GASKETS AND SEQUENTIAL TIGHTNING SHALL BE ENSURED OF ERECTION.
5. ENSURE TURRET MTG. DURING PRESSURE OR VACCUME TEST.
6. ALL VALVE TO BE YELLOW PAINTED.

FOR B.O.M. REFER E-B.O.M. OF DRG. NO. 0 463 19 5 0026.

ADDITIONAL INFORMATION 72589A17200

STATUS OF DRAWING

DISTRIBUTION OF PRINTS

INC	PPC	DEV 1.4G	DEV 1.4GT	DEV 8	DEV 9	LMW	Drawer
							0

TYPE OF PRODUCT OR 160 MVA,220/132/11 KV AUTO TRFR

NAME OF CUSTOMER/PROJECT M/S:- UPPTCL

BHARAT HEAVY ELECTRICALS LTD. JHANSI

	NAME	SIGN	DATE
DRN	RLL1		05/09/2020
DR	TBA,SKS		11/09/2020
APPD	SHJ		11/09/2020

NO. OF VAR

DEPT-TRE | UN TOL. DIM C/M/F | SCALE | WEIGHT (KG) | REF. TO ASSY. NO. | ITEM NO | NO. OF ITEM

CODE-406

TITLE OUT SIDE FITTING.

DRAWING NO. 04631950026 REV. 02

SHT NO | NO OF SHT 16

REV	DATE	ALTERED / CHECKED / APPROVED	ZONE
01	161120	ALTERED RCS, CHECKED SKS, APPROVED SHJ	IN BOM. & DRG. IT. NO. 117, 118 &119 ADDED.
02	241220	ALTERED RCS, CHECKED SKS, APPROVED SHJ	LENGTH OF IT. 116 WAS 720.

SIGNATURE NOT REQUIRED AS IT IS SYSTEM GENERATED DRAWING

SIZE A0

Status: Released
Printed on: 2021-11-09 11:49:31 By: MM1