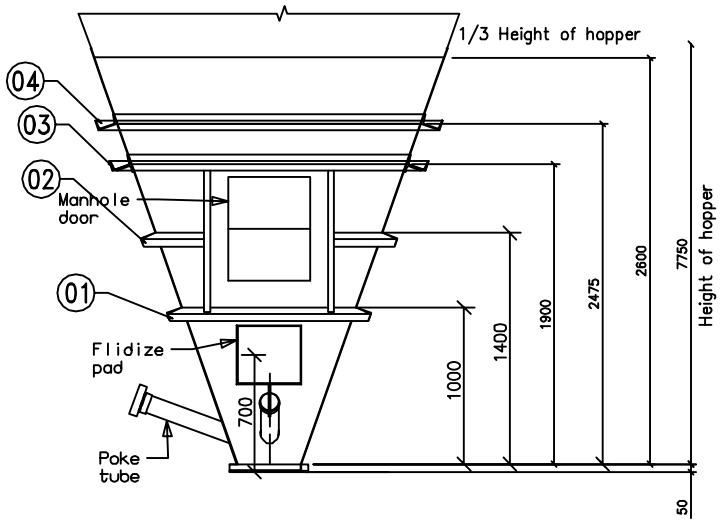

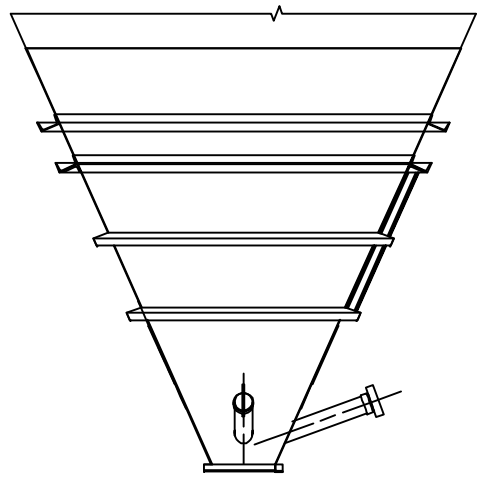

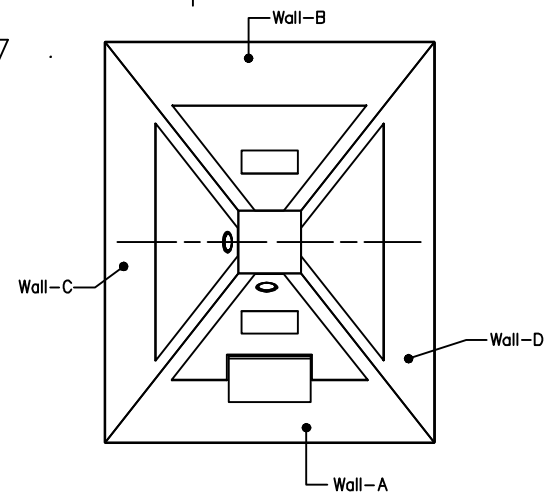

All dimensions are in millimetres

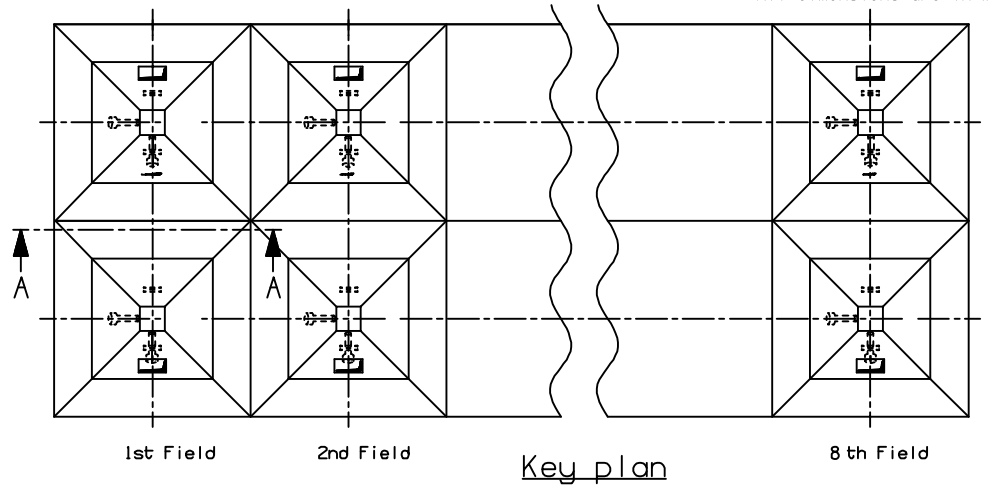

Key plan
(One ESP only)

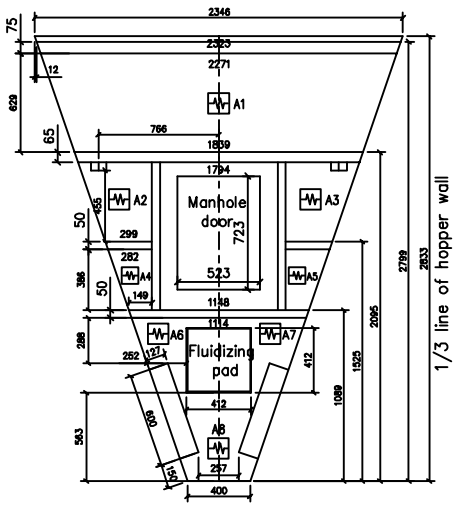

Wall-A

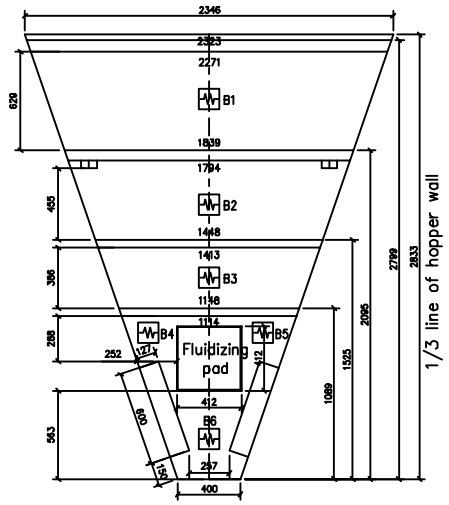

Wall-B

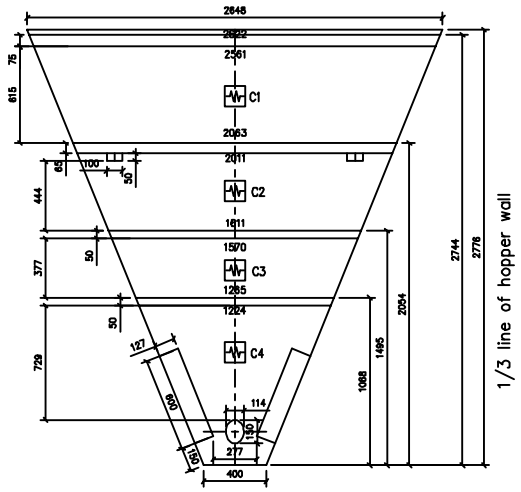

Wall-C

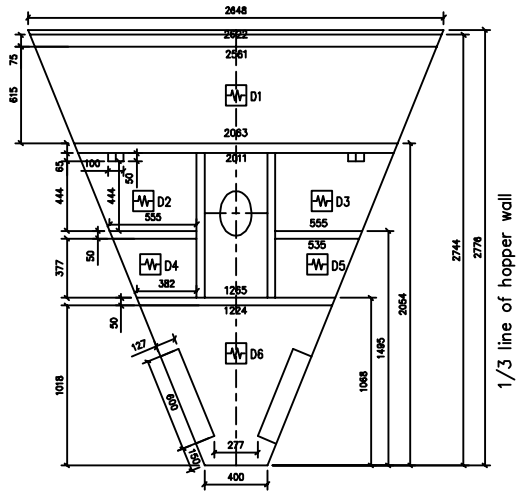

Wall-D

TABLE

WALL A	A1	A2	A3	A4	A5	A6	A7	A8
	1839 X 629	299 X 455	299 X 455	149 X 386	149 X 386	252 X 288	252 X 288	257 X 563
WALL B	B1	B2	B3	B4	B5	B6		
	1839 X 629	1448 X 455	1148 X 386	252 X 288	252 X 288	257 X 563		
WALL C	C1	C2	C3	C4				
	2063 X 615	1611 X 444	1265 X 377	277 X 729				
WALL D	D1	D2	D3	D4	D5	D6		
	2063 X 615	555 X 444	555 X 444	382 X 377	382 X 377	277 X 1018		

NOTES

01. FOR EACH HOPPER, MINIMUM 24 NUMBERS HEATING MODULES SHALL BE PROVIDED. IF ADDITIONAL HEATING MODULES ARE REQUIRED TO MEET THE BHEL'S TENDER REQUIREMENT AND TO MEET BIDDER'S DESIGN,THE SAME SHALL BE INCLUDED IN THE BIDDER'S BASIC SCOPE.
02. THE HEATING MODULES SHALL BE LOCATED ON THE HOPPER WALL AT LOCATIONS MARKED AS ⊠ .
03. THERMOSTAT LOCATION SHALL BE INDICATED IN THE VENDOR DRAWING WITH DISTANCE CLEARLY MARKED FROM HEATER MODULE. THE THERMOSTAT SHALL BE PLACED WITHIN 450MM FROM THE HOPPER BOTTOM.
04. THE TABLE SHOWS SPACE AVAILABLE FOR HEATER PLACEMENT. THE HEATERS SELECTED SHALL BE PLACED ON THE SPACE AVAILABLE AS SHOWN IN THE DRAWING SUCH THAT IT SHALL NOT FOUL WITH ANY ANGLES, STIFFNERS ETC DURING ERECTION.
05. MINIMUM 10MM WELD GAP SHALL BE CONSIDERED FOR SIZING THE PANEL HEATERS.
06. THE DETAILS SHOWN ARE FOR ONE HOPPER. THE SAME IS APPLICABLE FOR ALL OTHER HOPPERS ALSO.
07. HALF HEATER CURTAIN FOR EACH HOPPER SHALL BE PROVIDED.
08. WATT DENSITY IN THE LOWER HALF SHALL BE MORE THAN THAT IN THE UPPER HALF.
09. THE 1/3RD LINES SHOWN IN THIS DRAWING ARE IMAGINARY LINES. FREE SPACE IS AVAILABLE ABOVE THIS IMAGINARY LINE. IN CASE THE HEATER SELECTION REQUIRES ADDITIONAL VERTICAL HEIGHT IN THE TOP MOST LAYER, THE FREE SPACE CAN BE MADE USE OF.

PROJECT DATA:

01. PROJECT :: NORTH CHENNAI 1X800MW & UPPUR 2X800MW
02. HEATER CAPACITY = 15 KW/ HOPPER
03. TOTAL MINIMUM HEATING AREA :: 4.29 SQ.Mtr. (EXCLUDING NON HEATING AREA OF HEATERS)
04. THICKNESS OF HOPPER INSULATION :: 75 MM
05. ERECTION SUPERVISION BY VENDOR :: 16 HOPPERS
06. COMMISSIONING OF HEATERS BY VENDOR :: 96 HOPPERS/ BOILER.
07. NO OF HOPPERS / ESP IS 16 AND 96/ BOILER FOR SIX ESPS.

TECHNICAL DATA

01. HOPPER PLATE THICKNESS
    FOR THE FIRST TWO FIELDS is 8MM
    FOR THE FIELDS FROM 3 TO 8 is 6MM
02. FULL HOPPER PLATE AREA/HOPPER FOR ALL FIELD IS 118.440 SQ M
03. 1/3 HOPPER PLATE AREA/HOPPER FOR ALL FIELD IS 16.240 SQ M EXCLUDING MAN HOLE & POKE HOLE AREAS
04. FLUIDISER PAD SIZE = 412X412
05. POKE TUBE SIZE = 114X150 , MAN HOLE DOOR SIZE = 723X523 ,
06. ESP SIZE – 6XFAA–8X45M–2X72150–2
07. NO: OF HOPPERS PER ESP – 16, NO: OF ESPS PER BOILER – 6.

REV	DATE	ALTERED	GMK/RVR
01		CHECKED	MJM
ZONE	Project Data Note–03 Revised		

CAUTION: The information on this document is the property of BHARAT HEAVY ELECTRICALS LTD. It must not be used directly or indirectly in any way detrimental to the interest of the company.

TYPE OF PRODUCT OR NAME OF CUSTOMER/PROJECT: NORTH CHENNAI–1x800MW / UPPUR–2X800MW
CUSTOMER NO: (R836) (R837 & R838)

BHARAT HEAVY ELECTRICALS LTD.,
UNIT: BOILER AUXILIARIES PLANT.
RANIPET - 632 406.

	NAME	SIGN	DATE	NO.OF VAR.
DRN	M.SOWMIYA	M Sowmiya	21.04.17	-
CHD	GMK & R.VR	GMK & R.Vakat	22.04.17	
APPD	MJM	Mjay	22.04.17	

DEPT	GRADE OF UNTOL.DIM	SCALE	WEIGHT (KG).	REF. TO ASSY/OLD DRG.	ITEM NO.	No. OF ITEMS
ECI		N.T.S	-	-	-	-
CODE 9778						

TITLE: HOPPER LOWER PART DETAILS FOR FIXING PANEL TYPE HEATERS

CARD CODE

DRAWING NO. 2–00–114–30210

REV 01

Size A2