FIRST ANGLE PROJECTION

(ALL DIMENSIONS ARE IN mm)

DRG. NO. 1-61-000-00256 SH. OF

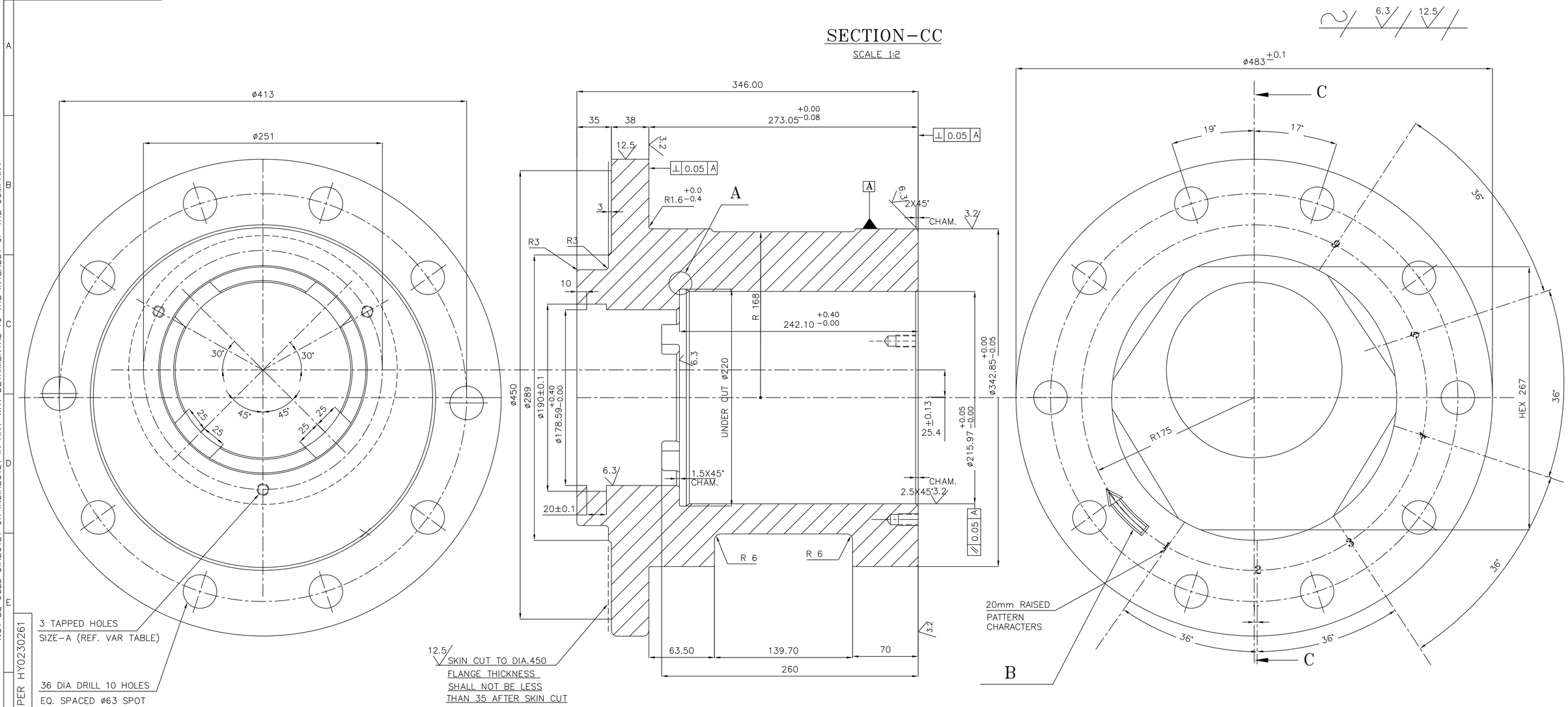

SIZE	VAR-01	VAR-02
A	1/2"-13 UNC2- -1" DEEP	M12-28 DEEP

VAR-01 : INCH TAPPING FOR SINGRAULI-VII AND KORBA-VI

VAR-02 : METRIC TAPPING FOR OTHER PROJECTS

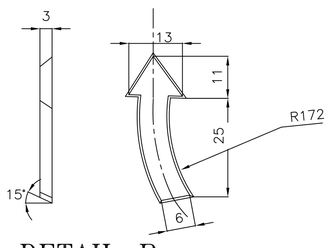

DETAIL-B

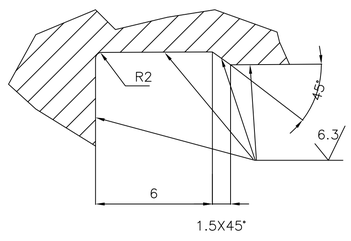

DETAIL-A

PATTERN NO. 1-61-000-00256

VARIANT NO	ITEM NO	DESCRIPTION	STD	DRAWING NO	ITEM NO / VAR NO	MATL CODE / MATL SPEC	UNIT WT / QTY
		CASTING				BA9110307060	150 00
						AA19703	

THE FOLLOWING CONDITIONS APPLY EXCEPT OTHERWISE STATED.

1. REF. TO HY0230261 FOR UNSPECIFIED TOLERANCES.
2. CHAMFER M/CD. SHARP EDGES 1.2 TO 1.0 AT 45°
3. INTERNAL M/CD. CORNER RADII 1 TO 0.7
4. THE SURFACE ROUGHNESS WHERE-EVER NOT SHOWN SHALL BE TAKEN FROM THE SURFACE ROUGHNESS SHOWN OUT SIDE THE BACK SLASH GIVEN ON THE TOP MOST RIGHT CORNER OF THE DRG.

TYPE OF PRODUCT OR NAME OF CUSTOMER/PROJECT: 1003XRP BOWL MILL

BHARAT HEAVY ELECTRICALS LIMITED
HYDERABAD

	NAME	SIGN.	DATE	NO.OF VAR.
DRN.	N.D.S		15.4.99	
CHD.	S.G		15.4.99	
APPD.	K.M.RAO		15.4.99	

DEPT. PUL.V.ENGG	UNTOL. DIMS. GR.		SCALE	WEIGHT (KG)	REF. TO ASSY. DRG.	ITEM NO.	NO.OF ITEMS
DEPT.CODE 446	G/M/F		NTS	150.00	1.61.000.01233 (D-101-00152-9)		03

TITLE: TRUNNION SHAFT END CAP-FREE END

CARD CODE

DRAWING NO. 1-61-000-00256 REV. 06

SHT. No NO. OF SHT.

REV.	DATE	ALTERED	CHD/APPD
06	09.01.06	VARIANT TABLE ADDED	V.KUMAR
05	10.6.03	GROOVE 20 X ø190 AT 10 FROM EDGE ADDED.	

ZONE

THE INFORMATION ON THIS DOCUMENT IS THE PROPERTY OF BHARAT HEAVY ELECTRICALS LIMITED. IT MUST NOT BE USED DIRECTLY OR INDIRECTLY IN ANY WAY DETRIMENTAL TO THE INTEREST OF THE COMPANY

GENERAL DIMENSIONAL LIMITS,FITS & TOLERANCES AS PER HY0230261

COMPUTER FILE NAME 61000256.DWG

REF. DRG. NO.

SIGN. AND DATE

INVENTORY NO

FIRST ANGLE PROJECTION (ALL DIMENSIONS ARE IN mm) BSES

DRG. NO. 1-61-000-00257

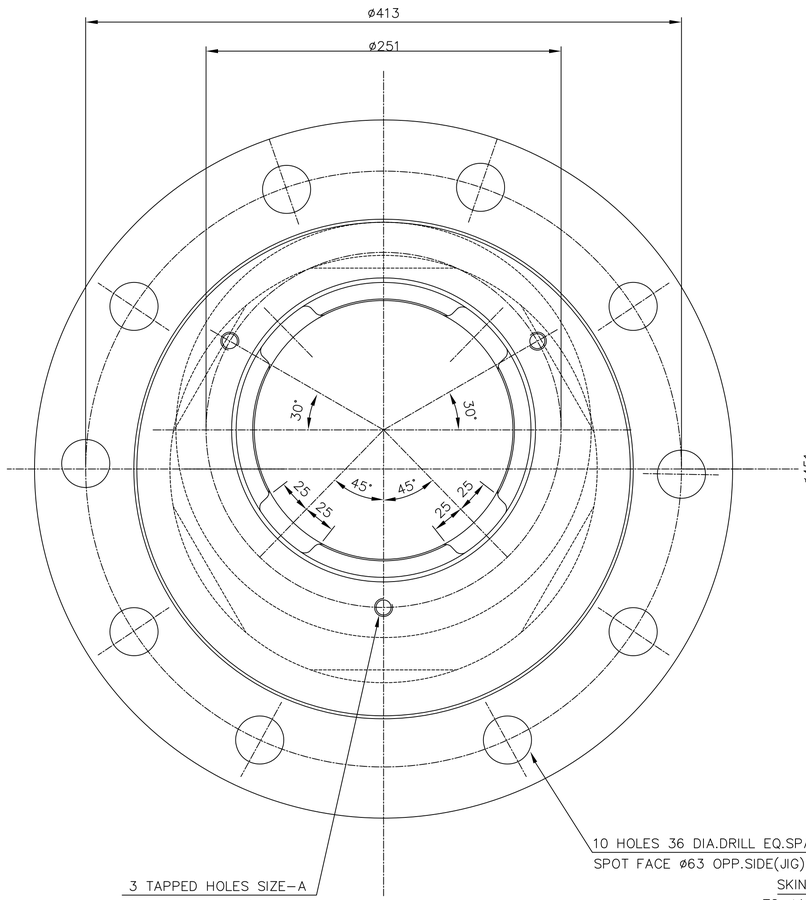

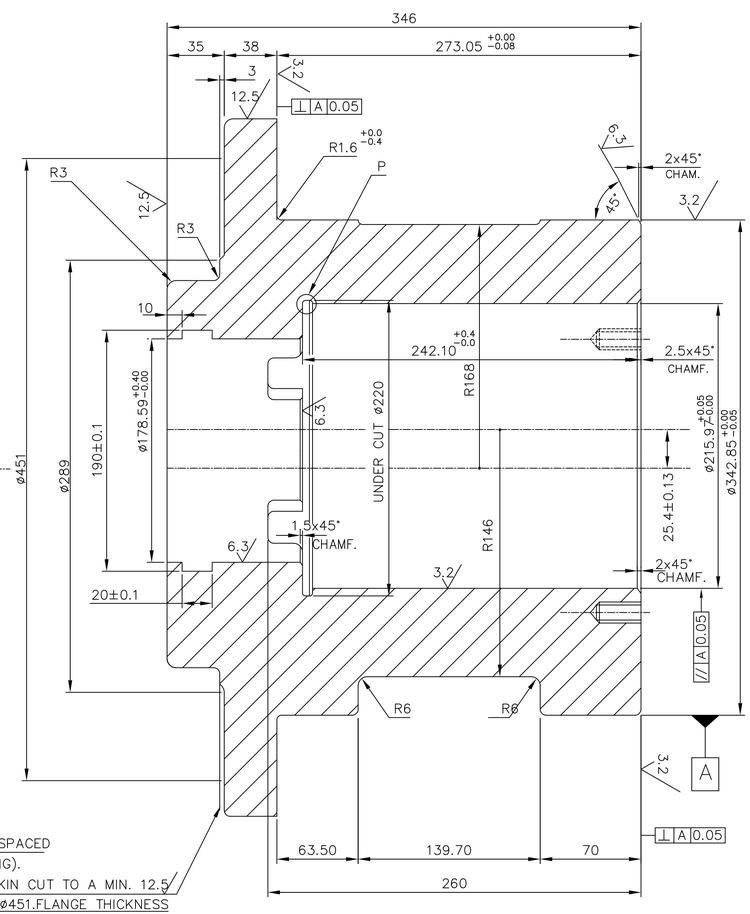

SECTION-AA

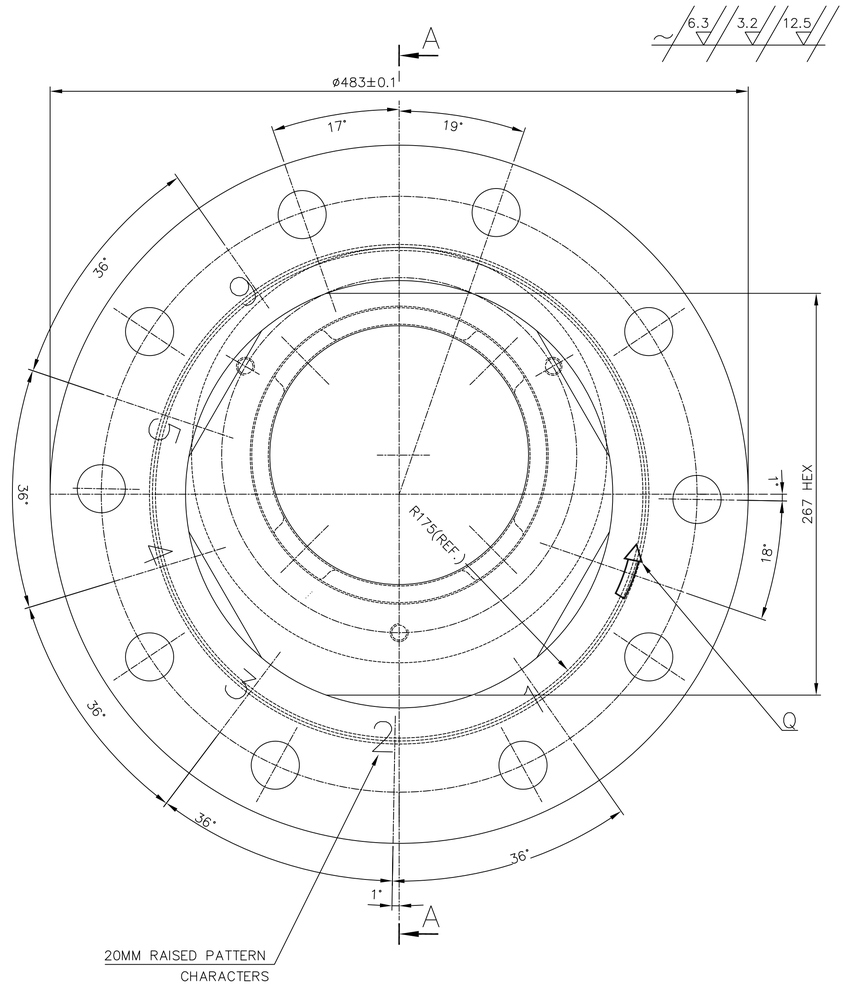

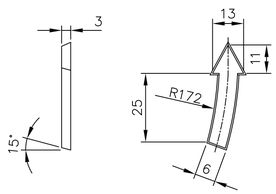

DETAIL-Q
(SCALE 1:1)

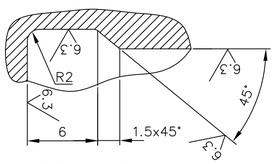

DETAIL-P
(SCALE 1:1)

SIZE	VAR-01	VAR-02
	1/2"-13 UNC2- -1" DEEP	M12-28 DEEP

VAR-01 : INCH TAPPING FOR SINGRAULI-VII AND KORBA-VI

VAR-02 : METRIC TAPPING FOR OTHER PROJECTS

NOTE:-

1. PATTERN NO. 1-61-000-00257
2. BREAK ALL SHARP EDGES AND CORNERS UNLESS OTHERWISE NOTED.

ITEM NO	DESCRIPTION	DRAWING NO.	MATERIAL CODE / MATERIAL SPECN.	NET WT.	GROSS WT. / QUANTITY
01	CASTING		BA9110307052 / AA 19703	150.00	000

THE FOLLOWING CONDITIONS APPLY EXCEPT OTHERWISE STATED...

1. REF.TO HY0230261 FOR UNSPECIFIED TOLERANCES.
2. CHAMFER M/CD SHARP EDGES 1.2 TO 1.0 AT 45°.
3. INTERNAL M/CD CORNER RADII 1 TO 0.7.
4. THE SURFACE ROUGHNESS WHEREVER NOT SHOWN SHALL BE TAKEN FROM THE SURFACE ROUGHNESS SHOWN OUT SIDE BACK SLASHES GIVEN AT THE TOP MOST RIGHT CORNER OF THE DRG.

TYPE OF PRODUCT OR NAME OF CUSTOMER/PROJECT: 1003 XRP BM

BHARAT HEAVY ELECTRICALS LTD. HYDERABAD

	NAME	SIGN.	DATE
DRN.	N.D.S		15.4.99
CHD.	S.G		15.4.99
APPD.	K.M.RAO		15.4.99

NO.OF VAR.

DEPT.	GRADE OF UNTOL. DIM.	SCALE	WEIGHT (KG)	REF. TO ASSY DRG.	ITEM NO.	NO.OF ITEMS
MILLS CODE 240	ø / M / f	1:2	150.00	0 61 000 00080 (D-101-00151-9)	46	

TITLE: TRUNNION SHAFT END CAP-THRUST END

DRAWING NO. 1-61-000-00257 REV. 05

SHEET NO. NO OF SHEETS

REV.	DATE	ALTERED	CHECKED	APPD.
05	09.01.06	VARIANT TABLE ADDED	V.KUMAR	
04	10.06.03	GROOVE ø190 X 20 X 10 FROM EDGE ADDED.		

ZONE

THE INFORMATION ON THIS DOCUMENT IS THE PROPERTY OF BHARAT HEAVY ELECTRICALS LIMITED.
IT MUST NOT BE USED DIRECTLY OR INDIRECTLY IN ANY WAY DETRIMENTAL TO THE INTEREST OF THE COMPANY

COMPUTER FILE NAME : 16100257.DWG

REF. DRG. NO. | SIGN. AND DATE | INVENTORY NO

FIRST ANGLE PROJECTION (ALL DIMENSIONS ARE IN mm) C.C.S.

DRG. NO. 1-61-004-01191

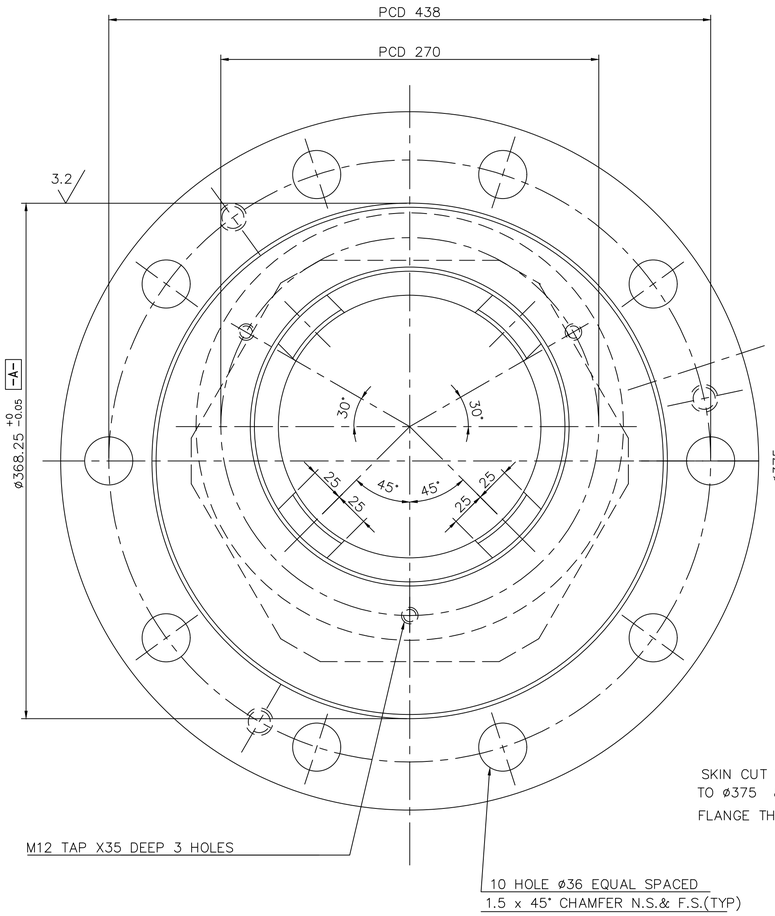

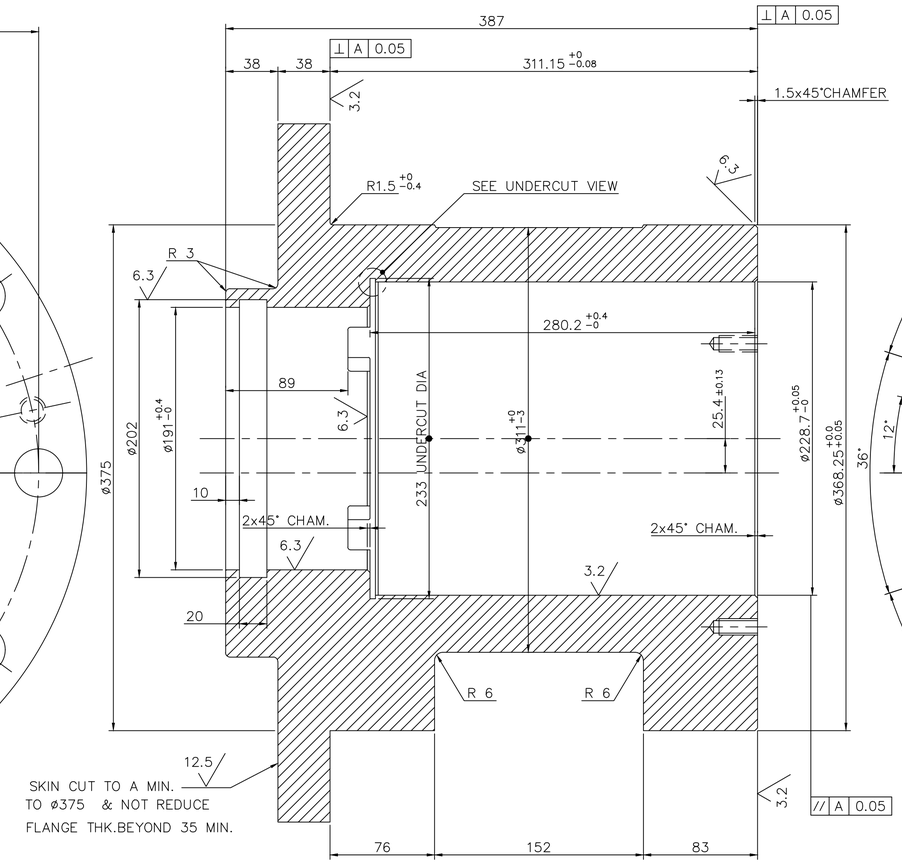

SECTION A–A

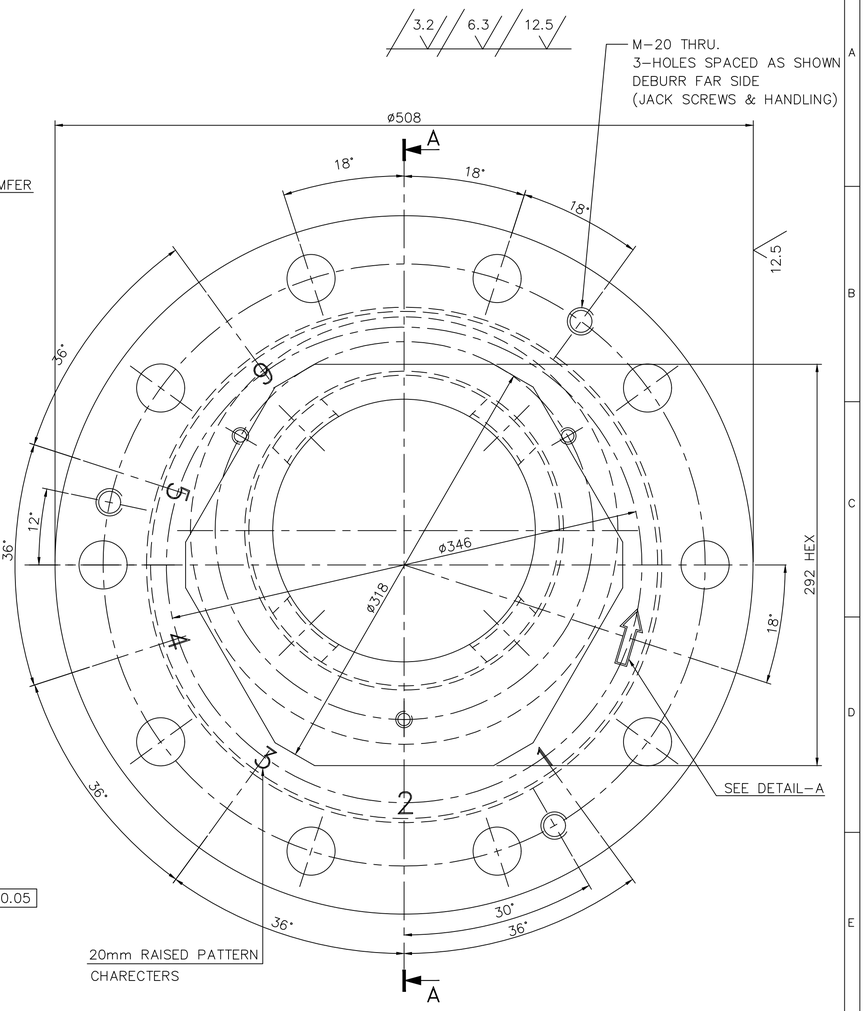

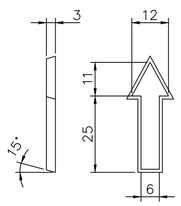

DETAIL–A

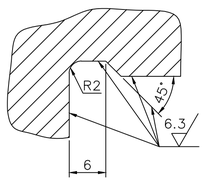

UNDERCUT VIEW

NOTES:–

1. BREAK ALL SHARP EDGES AND CORNERS UNLESS OTHERWISE NOTED.
2. TOLERANCES UNLESS OTHERWISE NOTED.
   CASTING ±1.6"
   FORGING ±0.1"

F/M MAT CODE : BA9711031019

ITEM NO.	DESCRIPTION	DRAWING NO.	VAR. NO.	RAW MATERIAL SIZE OR CASTING DRG. NO. OR FORGING DRG. NO.	MATERIAL CODE / MATERIAL SPECN.	NET WT. / QUANTITY	GROSS WT.
01	CASTING				BA9110353119 / AA 19703	200.000	

REV.	DATE	ALTERED	CHD./APPD.	ZONE	GROOVE ø202X20 WIDTH ADDED.
04	07.02.09				
03	17.12.07				F/M MAT CODE ADDED.
02	4.6.99				DRAWING REDRAWN IN ACAD. INCORPORATING PREVIOUR REV. VARIANTS 01 & 02 ADDED.

THE FOLLOWING CONDITIONS APPLY EXCEPT OTHERWISE STATED.

1. REF. TO HY0230261 FOR UNSPECIFIED TOLERANCES.
2. CHAMFER M/CD. SHARP EDGES 1.2 TO 1.0 AT 45°.
3. INTERNAL M/CD. CORNER RADII 1 TO 0.7
4. THE SURFACE ROUGHNESS WHERE-EVER NOT SHOWN SHALL BE TAKEN FROM THE SURFACE ROUGHNESS SHOWN OUT SIDE THE BACK SLASH GIVEN OR THE TOP MOST RIGHT CORNER OF THE DRG.

TYPE OF PRODUCT: 1103 XRP BOWL MILL

NAME OF CUSTOMER/PROJECT

BHARAT HEAVY ELECTRICALS LIMITED HYDERABAD

	NAME	SIGN.	DATE
DRN.	C.C.S		4.6.99
CHD.	ND.SAMUEL		4.6.99
APPD.	S.GHATGE		4.6.99

NO.OF VAR.

DEPT.	UNTOL. DIMS. GR.	SCALE	WEIGHT (KG)	REF. TO ASSY DRG.	ITEM NO.	NO.OF ITEMS
PUL.V. CODE 446	¢/M/F	1:2	200.000	0-61-004-00571	03	32

TITLE: TRUNNION SHAFT END CAP–THRUST END

CARD CODE

DRAWING NO. 1-61-004-01191 REV. 04

SHEET NO. 01 NO OF SHEETS 01

THE INFORMATION ON THIS DOCUMENT IS THE PROPERTY OF BHARAT HEAVY ELECTRICALS LIMITED. IT MUST NOT BE USED DIRECTLY OR INDIRECTLY IN ANY WAY DETERIMENTAL TO THE INTEREST OF THE COMPANY

COMPUTER FILE NAME 16101191.DWG | REF. DRG. NO. 0-61-004-00571 | SIGN. AND DATE | INVENTORY NO

FIRST ANGLE PROJECTION (ALL DIMENSIONS ARE IN mm) C.C.S.

DRG. NO. 1-61-004-01192

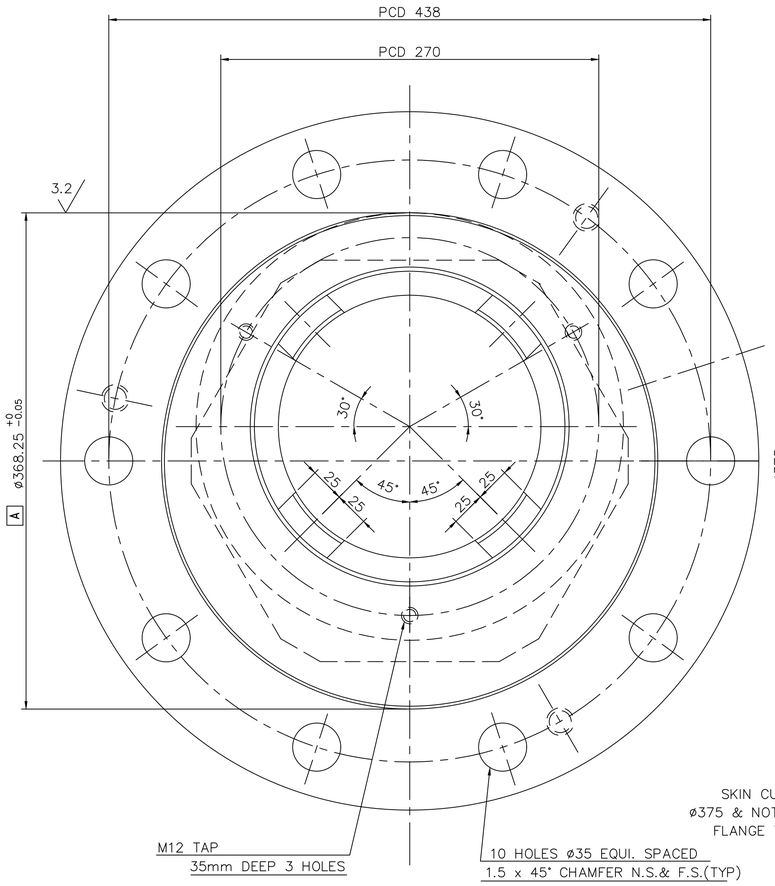

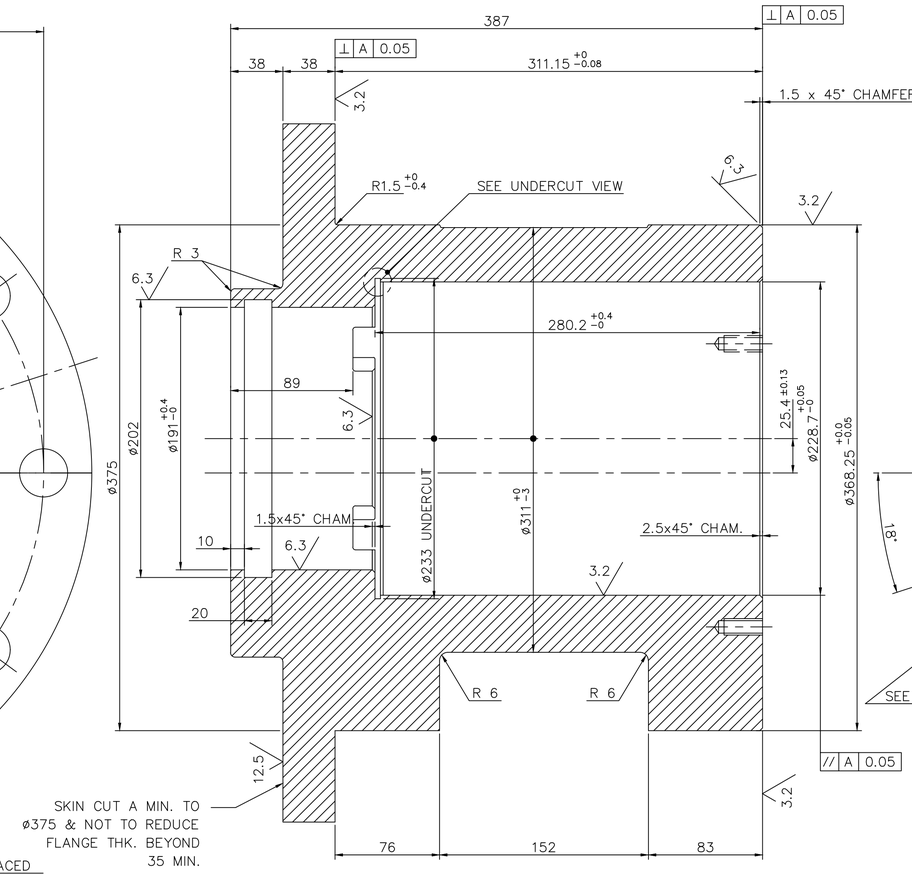

SECTION–AA

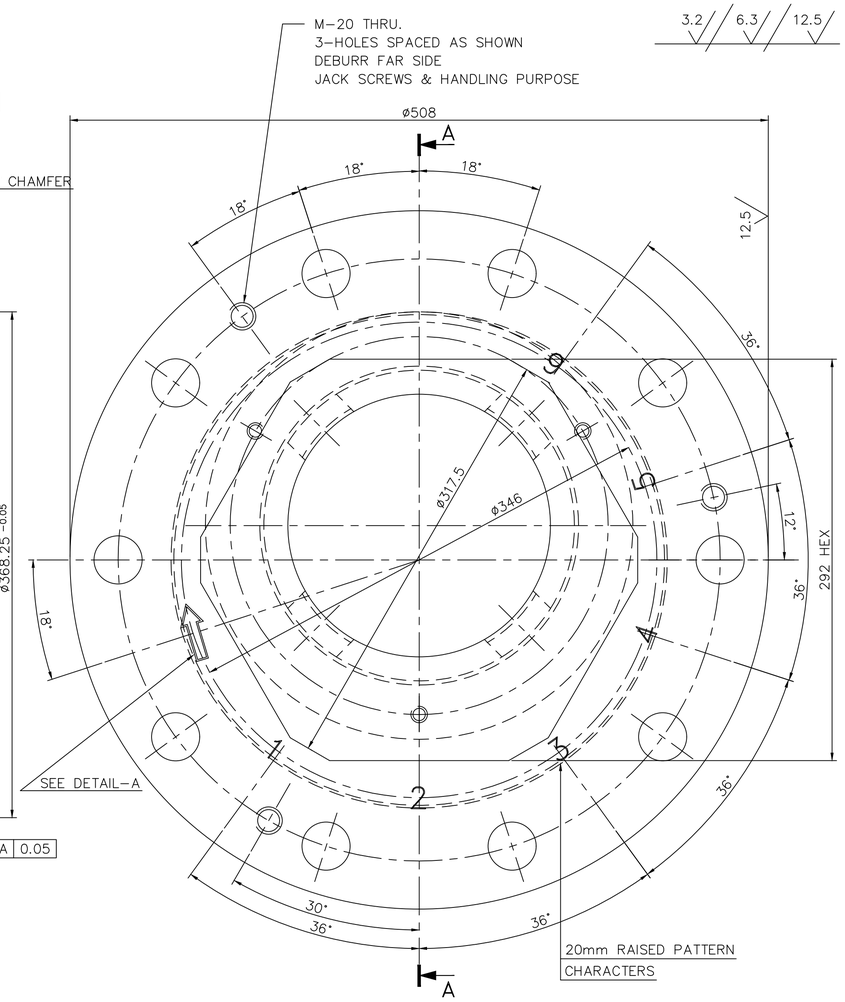

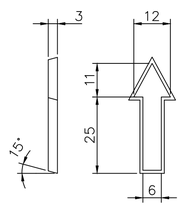

DETAIL–A
FULL SCALE

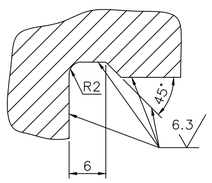

UNDERCUT VIEW
DOUBLE SIZE

NOTES:–

1. BREAK ALL SHARP EDGES AND CORNERS UNLESS OTHERWISE NOTED.
2. TOLERANCES UNLESS OTHERWISE NOTED.
   CASTING ±1.6"
   FORGING ±0.1"

F/M MAT CODE : BA9711031027

ITEM NO.	DESCRIPTION	DRAWING NO.	VAR. NO.	RAW MATERIAL SIZE OR CASTING DRG. NO. OR FORGING DRG. NO.	MATERIAL CODE / MATERIAL SPECN.	NET WT. / QUANTITY	GROSS WT.
01	CASTING				BA9110353127 / AA 19703	200.000	

THE FOLLOWING CONDITIONS APPLY EXCEPT OTHERWISE STATED.

1. REF. TO HY0230261 FOR UNSPECIFIED TOLERANCES.
2. CHAMFER M/CD. SHARP EDGES 1.2 TO 1.0 AT 45°.
3. INTERNAL M/CD. CORNER RADII 1 TO 0.7
4. THE SURFACE ROUGHNESS WHERE–EVER NOT SHOWN SHALL BE TAKEN FROM THE SURFACE ROUGHNESS SHOWN OUT SIDE THE BACK SLASH GIVEN OR THE TOP MOST RIGHT CORNER OF THE DRG.

TYPE OF PRODUCT
NAME OF CUSTOMER/PROJECT: 1103 XRP BOWL MILL

BHARAT HEAVY ELECTRICALS LIMITED HYDERABAD

	NAME	SIGN.	DATE	NO.OF VAR.
DRN.	C.C.S		16.6.99	
CHD.	N.D.SAMUEL		16.6.99	
APPD.	S.GHATGE		16.6.99	

DEPT.	UNTOL. DIMS. GR.		SCALE	WEIGHT (KG)	REF. TO ASSY DRG.	ITEM NO.	NO.OF ITEMS
PULV.	¢/M/F		1:2	200.000	0-61-104-00571	10	32
CODE 446							

TITLE: TRUNNION SHAFT END CAP–FREE END

CARD CODE

DRAWING NO. 1-61-004-01192 REV. 03

SHEET NO. 01 NO OF SHEETS 01

REV.	DATE	ALTERED	ZONE
03	07.02.09	CHD./APPD.	GROOVE ø202X20 WIDTH ADDED.
02	17.12.07	CHD./APPD.	F/M MAT CODE ADDED.
01	15.6.99	CHD./APPD.	DRAWING REDRAWN IN AUTOCAD. VARIANTS ADDED.

THE INFORMATION ON THIS DOCUMENT IS THE PROPERTY OF BHARAT HEAVY ELECTRICALS LIMITED.
IT MUST NOT BE USED DIRECTLY OR INDIRECTLY IN ANY WAY DETERIMENTAL TO THE INTEREST OF THE COMPANY

COMPUTER FILE NAME 10041192.DWG
REF. DRG. NO. D-110-00104-06
SIGN. AND DATE
INVENTORY NO

FIRST ANGLE PROJECTION

(ALL DIMENSIONS ARE IN mm)

BSES

DRG. NO. 1-61-288-01034

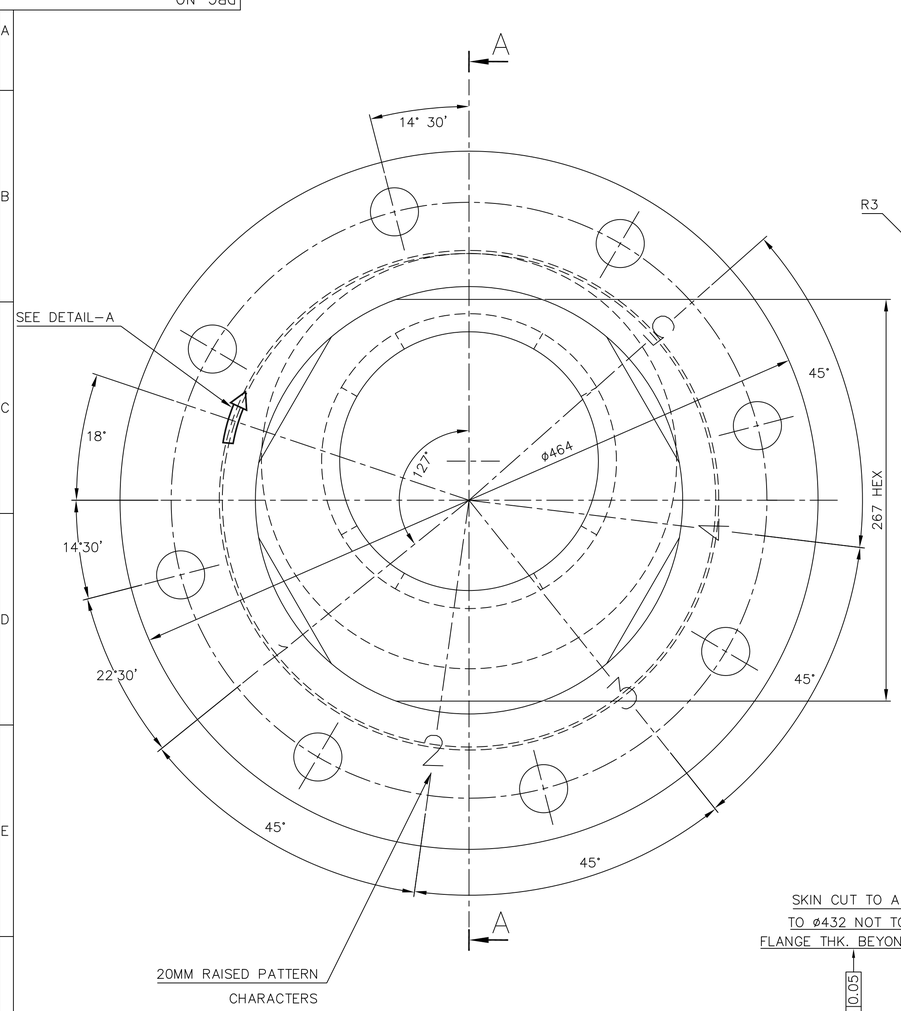

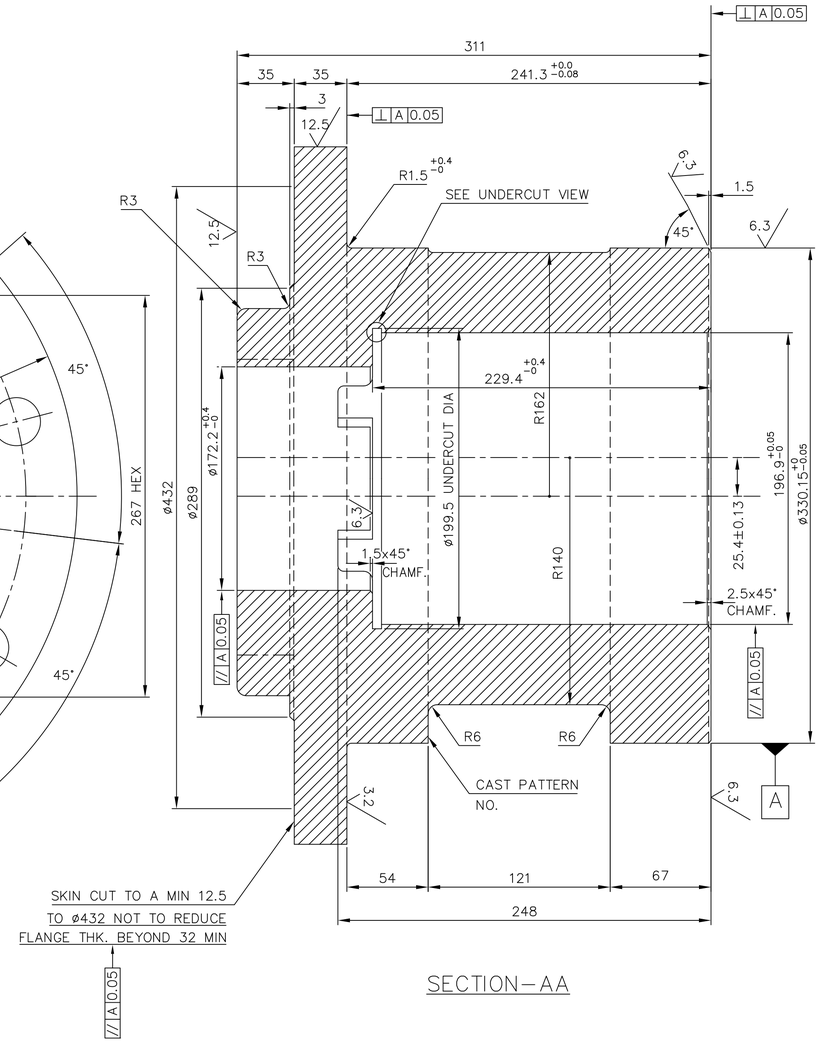

SECTION–AA

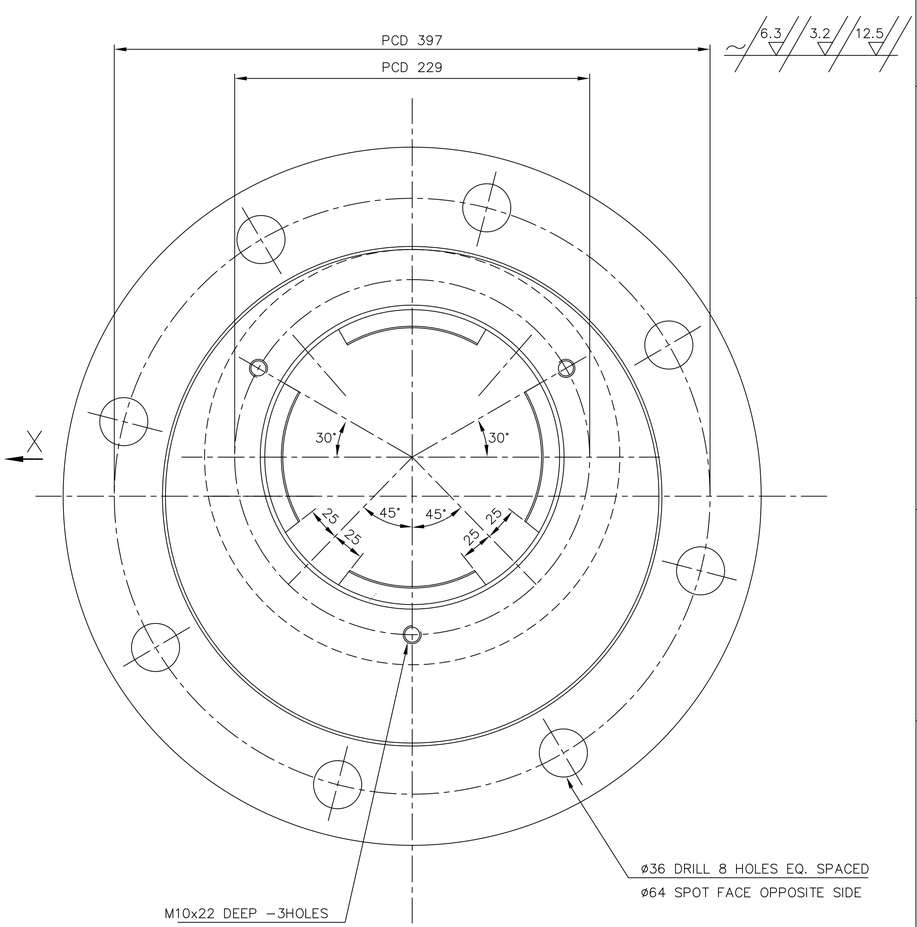

VIEW–X

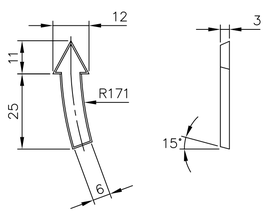

DETAIL–A

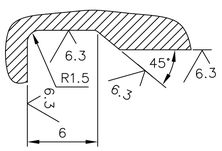

UNDERCUT VIEW

NOTE: –

1. THIS IS A FINISH MACHINED DRAWING. CASTING SHALL BE SUPPLIED IN STRESS RELIEVED AND ROUGH MACHINED CONDITION WITH 5mm ALOWANCE ON ALL MACHINED SURFACES.
2. BREAK ALL SHARP EDGES AND CORNERS UNLESS OTHERWISE NOTED.

ITEM NO	DESCRIPTION	DRAWING NO.	MATERIAL CODE / MATERIAL SPECN.	NET WT.	GROSS WT.
01	CASTING		BA9110206582 / AA19702	120.00	1

THE FOLLOWING CONDITIONS APPLY EXCEPT OTHERWISE STATED...

1. REF.TO HY0230261 FOR UNSPECIFIED TOLERANCES.
2. CHAMFER M/CD SHARP EDGES 1.2 TO 1.0 AT 45°.
3. INTERNAL M/CD CORNER RADII 1 TO 0.7.
4. THE SURFACE ROUGHNESS WHEREVER NOT SHOWN SHALL BE TAKEN FROM THE SURFACE ROUGHNESS SHOWN OUT SIDE BACK SLASHES GIVEN AT THE TOP MOST RIGHT CORNER OF THE DRG.

TYPE OF PRODUCT OR NAME OF CUSTOMER/PROJECT: 883 XRP BOWL MILL

BHARAT HEAVY ELECTRICALS LTD. HYDERABAD

	NAME	SIGN.	DATE
DRN.	BSES		12.12.98
CHD.	G.S.N.M.RAO		2.12.03
APPD.			

NO.OF VAR.

DEPT. BMD	GRADE OF UNTOL. DIM.	SCALE	WEIGHT (KG)	REF. TO ASSY DRG.	ITEM NO.	NO.OF ITEMS
CODE 446	¢ / M / f	1:2	120.00	1.61.088.01022	03	24

TITLE: TRUNNION SHAFT END CAP (FREE END)

DRAWING NO. 1-61-088-01034 REV. 03

SHEET NO. 01 NO OF SHEETS 01

REV.	DATE	ALTERED	CHECKED	APPD.
03	12/12/98	BSES	G.S.N.M.R	

DRAWING REDRAWN ON AUTOCAD INCORPORATING ALL PREVIOUS REVISIONS

THE INFORMATION ON THIS DOCUMENT IS THE PROPERTY OF BHARAT HEAVY ELECTRICALS LIMITED.
IT MUST NOT BE USED DIRECTLY OR INDIRECTLY IN ANY WAY DETRIMENTAL TO THE INTEREST OF THE COMPANY

COMPUTER FILE NAME : 16101034.DWG

REF. DRG. NO. (D-94-146/5)

SIGN. AND DATE

INVENTORY NO

FIRST ANGLE PROJECTION (ALL DIMENSIONS ARE IN mm) BSES

DRG. NO. 1-61-288-01035

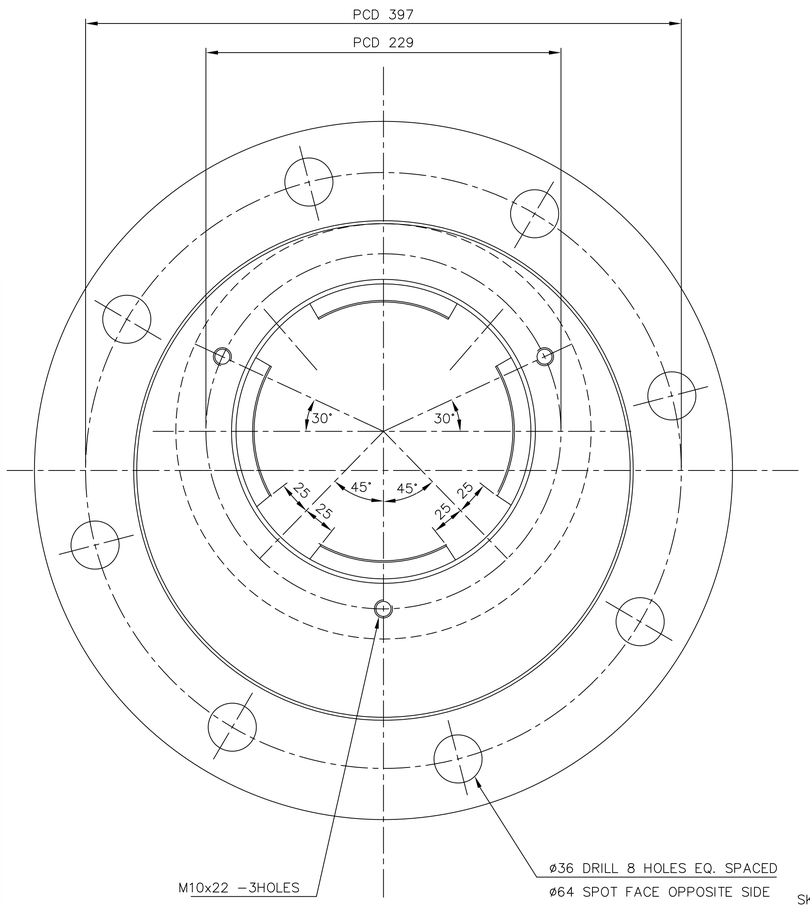

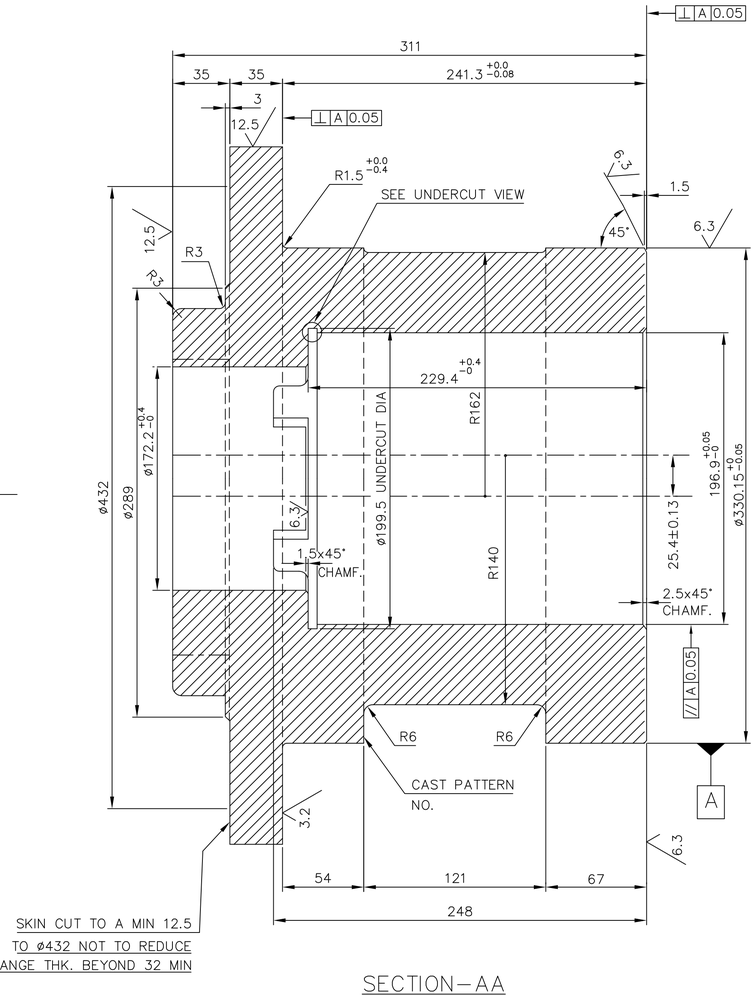

SECTION–AA

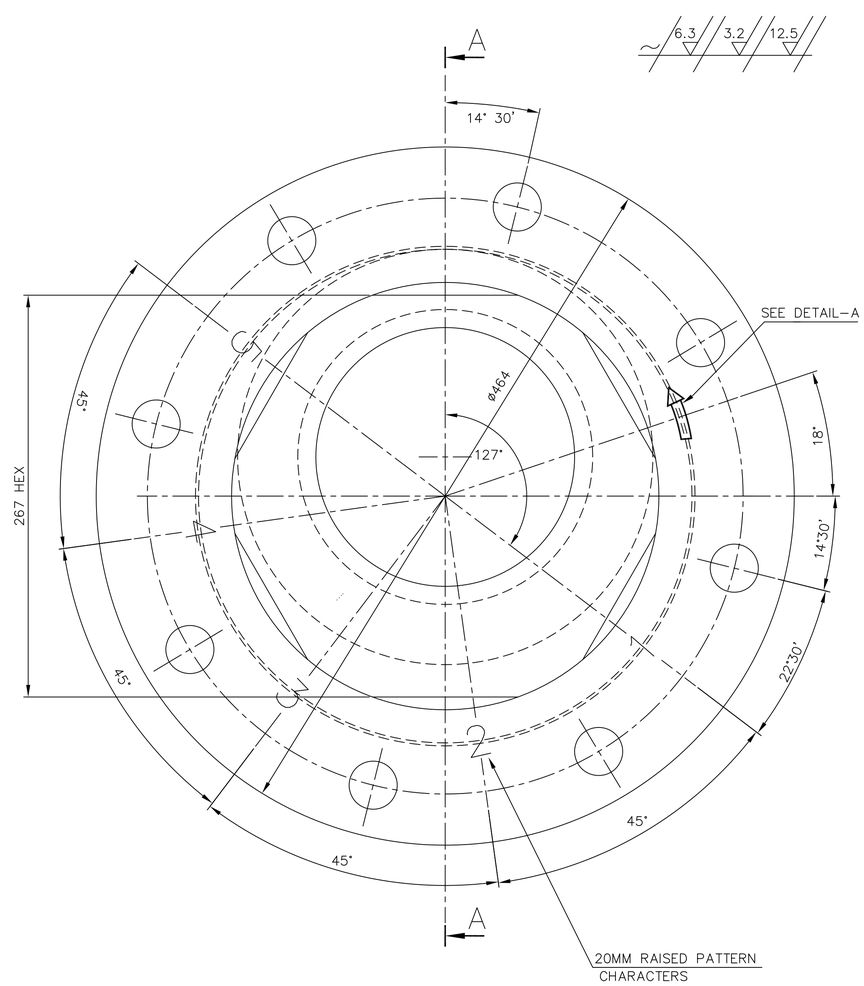

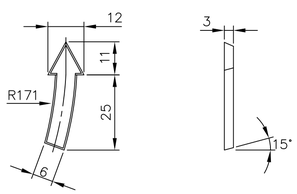

DETAIL–A

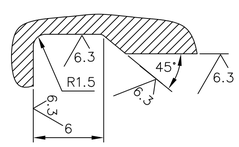

UNDERCUT VIEW

NOTES: –

1. THIS IS AFINISH MACHINED DRAWING. CASTING SHALL BE SUPPLIED IN STRESS RELLEIVED AND ROUGH MACHINED CONDTION WITH 5mm ALLOWANCE ON ALL MACHINED SURFACES.
2. BREAK ALL SHARP EDGES AND CORNERS UNLESS OTHERWISE NOTED.

ITEM NO	DESCRIPTION	DRAWING NO.	MATERIAL CODE / MATERIAL SPECN.	NET WT.	GROSS WT. / QUANTITY
01	CASTING		BA9110206574	120.00	
			AA19702	1	

THE FOLLOWING CONDITIONS APPLY EXCEPT OTHERWISE STATED...

1. REF.TO HY0230261 FOR UNSPECIFIED TOLERANCES.
2. CHAMFER M/CD SHARP EDGES 1.2 TO 1.0 AT 45°.
3. INTERNAL M/CD CORNER RADII 1 TO 0.7.
4. THE SURFACE ROUGHNESS WHEREVER NOT SHOWN SHALL BE TAKEN FROM THE SURFACE ROUGHNESS SHOWN OUT SIDE BACK SLASHES GIVEN AT THE TOP MOST RIGHT CORNER OF THE DRG.

TYPE OF PRODUCT OR NAME OF CUSTOMER/PROJECT: 883 XRP BOWL MILL

BHARAT HEAVY ELECTRICALS LTD. HYDERABAD

	NAME	SIGN.	DATE	NO.OF VAR.
DRN.	BSES		12.12.98	
CHD.	G.S.N.M.RAO		2.12.03	
APPD.				

DEPT. BMD	GRADE OF UNTOL. DIM.	SCALE	WEIGHT (KG)	REF. TO ASSY DRG.	ITEM NO.	NO.OF ITEMS
CODE 446	¢ / M / f	1:2	120.00	1.61.088.01022	10	24

TITLE: TRUNNION SHAFT END CAP–THRUST END

DRAWING NO. 1–61–088–01035 REV. 03

SHEET NO. 01 NO OF SHEETS 01

REV.	DATE	ALTERED / CHECKED	APPD.
03	12/12/98	ALTERED BSES / CHECKED G.S.N.M.RAO	

DRAWING REDRAWN ON AUTOCAD INCORPORATING ALL PREVIOUS REVISIONS

THE INFORMATION ON THIS DOCUMENT IS THE PROPERTY OF BHARAT HEAVY ELECTRICALS LIMITED.
IT MUST NOT BE USED DIRECTLY OR INDIRECTLY IN ANY WAY DETRIMENTAL TO THE INTEREST OF THE COMPANY

COMPUTER FILE NAME : 16101035.DWG
REF. DRG. NO. (D–94–145/4)
SIGN. AND DATE
INVENTORY NO

FIRST ANGLE PROJECTION

(ALL DIMENSIONS ARE IN mm)

DWG. NO. 1-61-176-00083

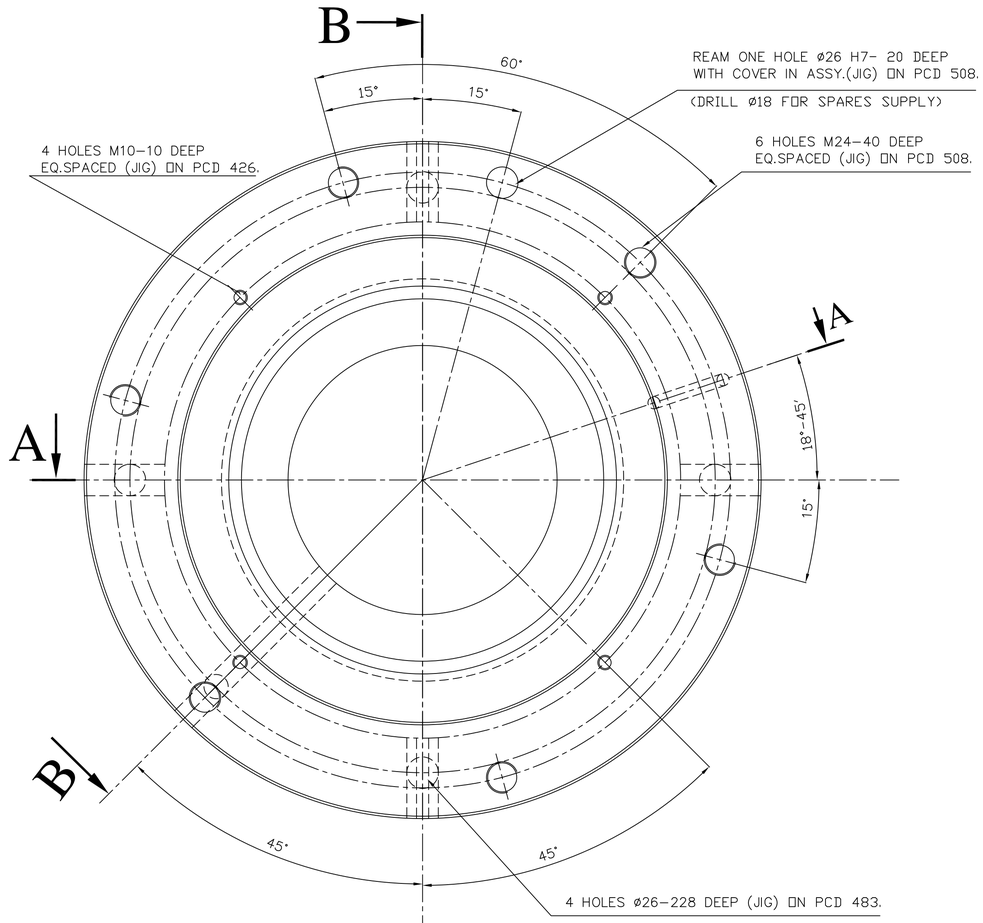

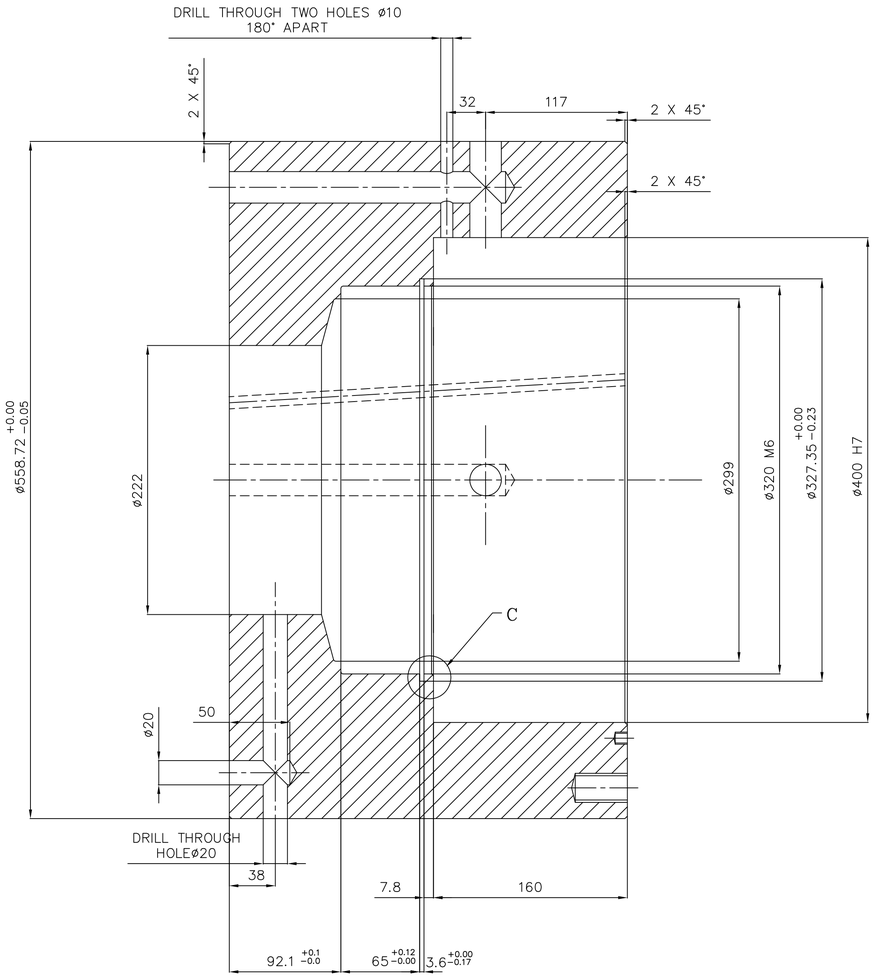

SECTION- BB

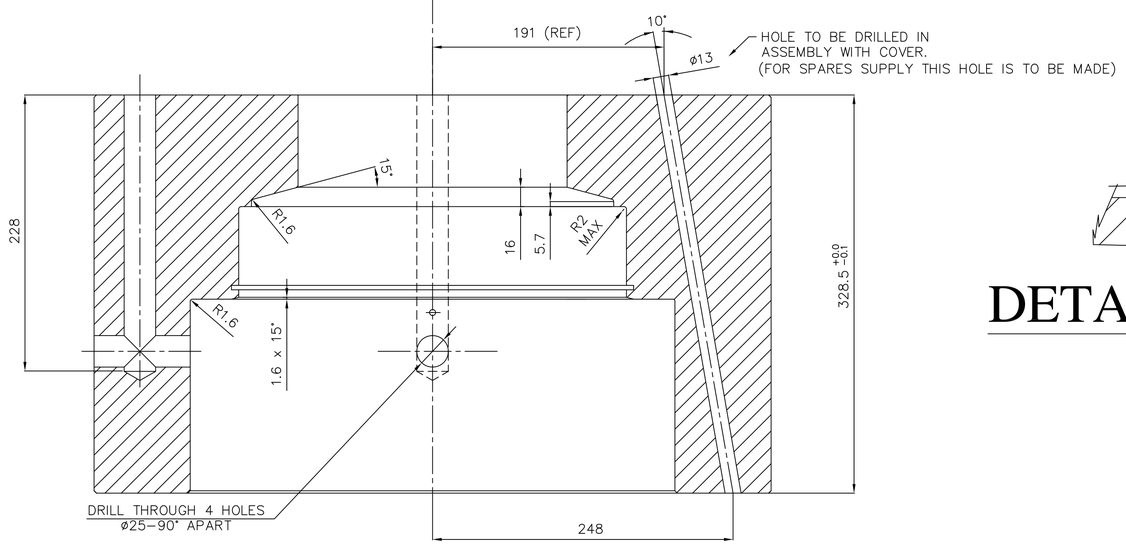

SECTION- AA

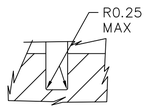

DETAIL-C

TOL SYMBOL	NOM SIZE	UPPER	LOWER
		LIMITS	
M6	ø320	−0.010	−0.046
H7	ø26	+0.021	+0.000
H7	ø400	+0.057	+0.000

ITEM NO.	DESCRIPTION	DRAWING NO.	VAR. NO.	RAW MATERIAL SIZE OR CASTING DRG. NO. OR FORGING DRG. NO.	MATERIAL CODE / MATERIAL SPECN.	NET WT.	GROSS WT. / QUANTITY
	CASTING				BA9110321098		388
					AA19703		1

THE FOLLOWING CONDITIONS APPLY EXCEPT OTHERWISE STATED.

1. REF. TO HY0230261 FOR UNSPECIFIED TOLERANCES.
2. CHAMFER M/CD. SHARP EDGES 1.2 TO 1.0 AT 45°.
3. INTERNAL M/CD. CORNER RADII 1 TO 0.7
4. THE SURFACE ROUGHNESS WHERE-EVER NOT SHOWN SHALL BE TAKEN FROM THE SURFACE ROUGHNESS SHOWN OUT SIDE THE BACK SLASH GIVEN OR THE TOP MOST RIGHT CORNER OF THE DRG.

TYPE OF PRODUCT

NAME OF CUSTOMER/PROJECT

BHARAT HEAVY ELECTRICALS LIMITED
HYDERABAD

	NAME	SIGN.	DATE	NO.OF VAR.
DRN.	E.M.ASHOK		16.03.04	
CHD.	AMAN		16.03.04	
APPD.	S.G		16.03.04	

DEPT.	UNTOL. DIMS. GR.	SCALE	WEIGHT (KG)	REF. TO ASSY DRG.	ITEM NO.	NO.OF ITEMS
446	¢/M/A	2:5	388.00	0-61-180-00625		

CODE PULV.

TITLE: LOWER BEARING AND PUMP HOUSING

CARD CODE

DRAWING NO. 1-61-176-00083 — REV. 04

SHEET NO. — NO OF SHEETS

REV.	DATE	ALTERED	CHD./APPD.	ZONE
04	6.3.04	E.M.ASHOK	CHD./APPD. AMAN/SG	

DRG REDRAWN IN AUTOCAD NOTE FOR ø13 HOLE TO BE DONE IN ASSEMBLYL ADDED.

THE INFORMATION ON THIS DOCUMENT IS THE PROPERTY OF BHARAT HEAVY ELECTRICALS LIMITED.
IT MUST NOT BE USED DIRECTLY OR INDIRECTLY IN ANY WAY DETRIMENTAL TO THE INTEREST OF THE COMPANY

COMPUTER FILE NAME 16100083

INVENTORY NO SIGN. AND DATE REF. DRG. NO.

FIRST ANGLE PROJECTION

(ALL DIMENSIONS ARE IN mm)

DRG. NO. 1-61-376-00018

3 HOLES M10 X 25 DEEP ON PCD 197

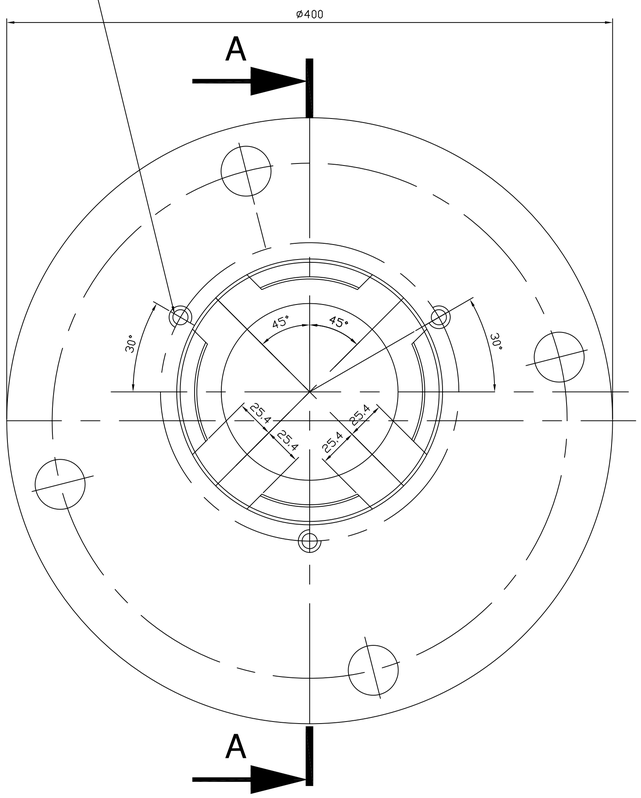

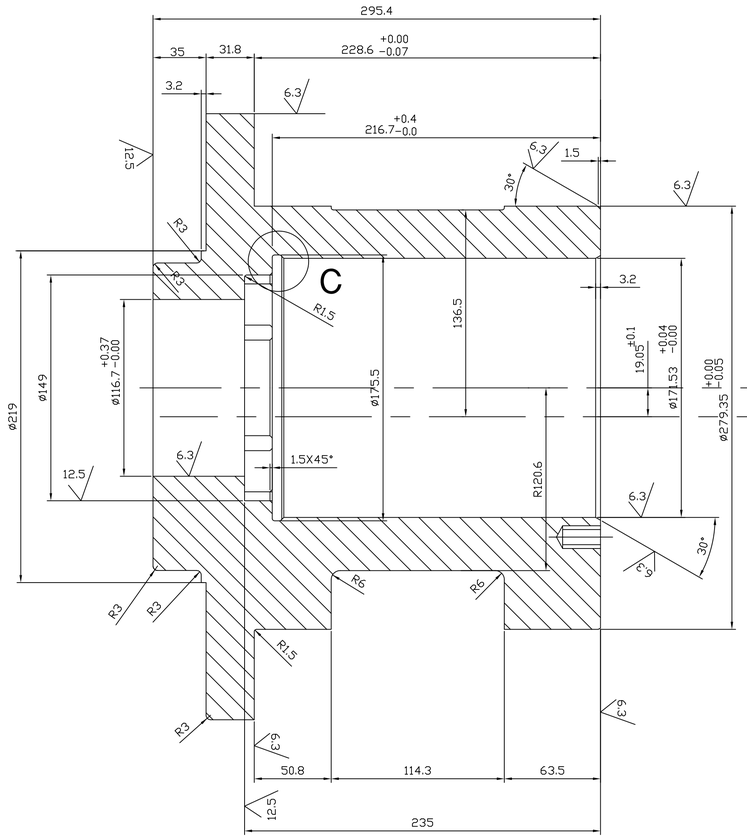

SECTION-AA

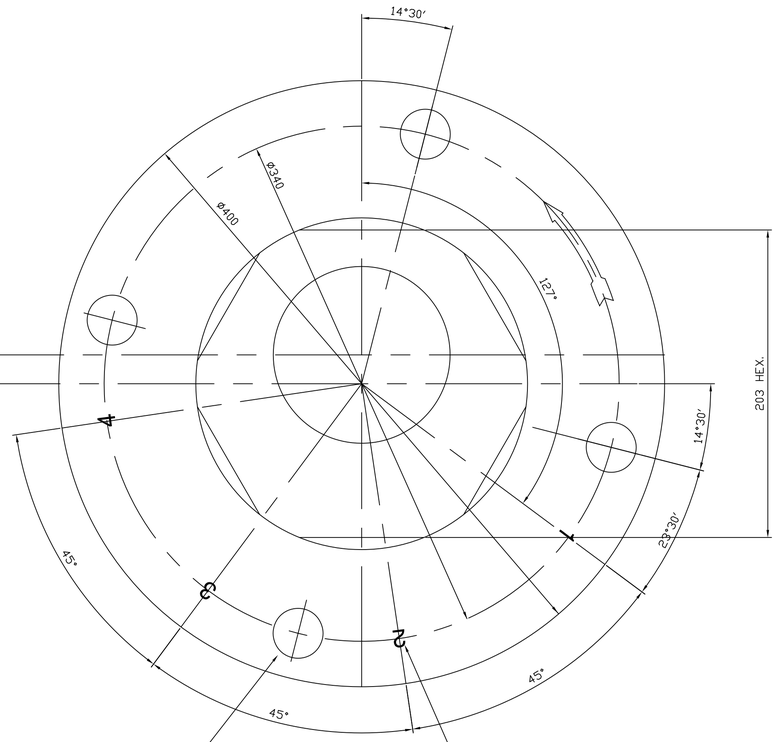

12.5 4 HOLES ø33 THRU,SPOT FACE ø58

CHAMFER EDGES OF BOLT HOLES TO 1X45°

NOTE

1. REMOVE ALL SHARP EDGES.
2. BOLT HOLES TO MATCH WITH MATING PARTS.
3. PATTERN NO. 10-F-002-011

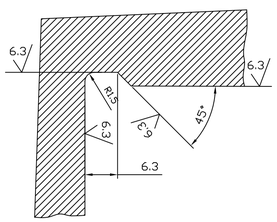

DETAIL C

ITEM NO.	DESCRIPTION	DRAWING NO.	VAR. NO.	RAW MATERIAL SIZE OR CASTING DRG. NO. OR FORGING DRG. NO.	MATERIAL CODE / MATERIAL SPECN.	NET WT.	GROSS WT. / QUANTITY
	CASTING				BA9110307028 / AA19703	81.00	

THE FOLLOWING CONDITIONS APPLY EXCEPT OTHERWISE STATED.

1. REF. TO HY0230261 FOR UNSPECIFIED TOLERANCES.
2. CHAMFER M/CD. SHARP EDGES 1.2 TO 1.0 AT 45°.
3. INTERNAL M/CD. CORNER RADII 1 TO 0.7
4. THE SURFACE ROUGHNESS WHERE-EVER NOT SHOWN SHALL BE TAKEN FROM THE SURFACE ROUGHNESS SHOWN OUT SIDE THE BACK SLASH GIVEN OR THE TOP MOST RIGHT CORNER OF THE DRG.

TYPE OF PRODUCT: 803 XRP

NAME OF CUSTOMER/PROJECT

BHARAT HEAVY ELECTRICALS LIMITED HYDERABAD

	NAME	SIGN.	DATE	NO.OF VAR.
DRN.	E.M.ASHOK		2-6-2K	
CHD.	N.D.S		2-6-2K	
APPD.	K.M.RAO		2-6-2K	

DEPT.	UNTOL. DIMS. GR.		SCALE	WEIGHT (KG)	REF. TO ASSY DRG.	ITEM NO.	NO.OF ITEMS
446	¢/M/¢		1:2 &2:1	81.00	0-61-076-00022		

CODE PULV.

TITLE: TRUNNION SHAFT END CAP (THRUST END)

CARD CODE

DRAWING NO. 1-61-376-00018 REV. 04

SHEET NO. NO OF SHEETS

REV.	DATE	ALTERED	CHD./APPD.	ZONE
04	3.6.2K	DRAWING REDRAWNBY INCORPORATING ALL PREVIOUS REVISIONS.	E.M.ASHOK / N.D.S	

COMPUTER FILE NAME 16100018

SIGN. AND DATE REF. DRG. NO.

INVENTORY NO.

THE INFORMATION ON THIS DOCUMENT IS THE PROPERTY OF BHARAT HEAVY ELECTRICALS LIMITED. IT MUST NOT BE USED DIRECTLY OR INDIRECTLY IN ANY WAY DETERMENTAL TO THE INTEREST OF THE COMPANY

FIRST ANGLE PROJECTION

(ALL DIMENSIONS ARE IN mm)

DRG. NO. 1-61-376-00019

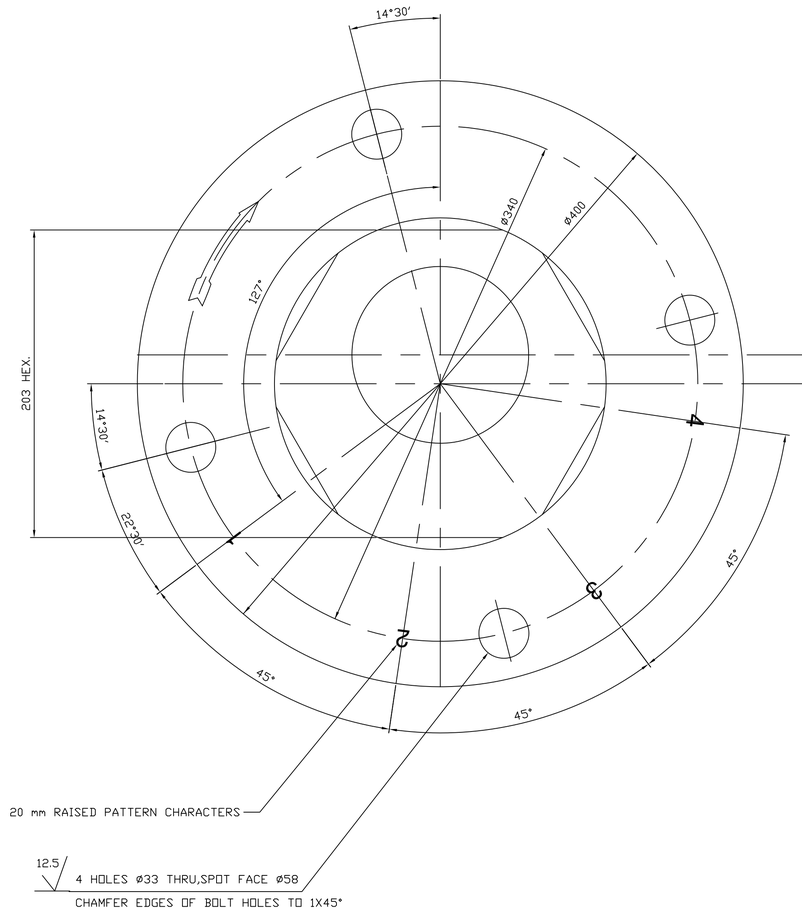

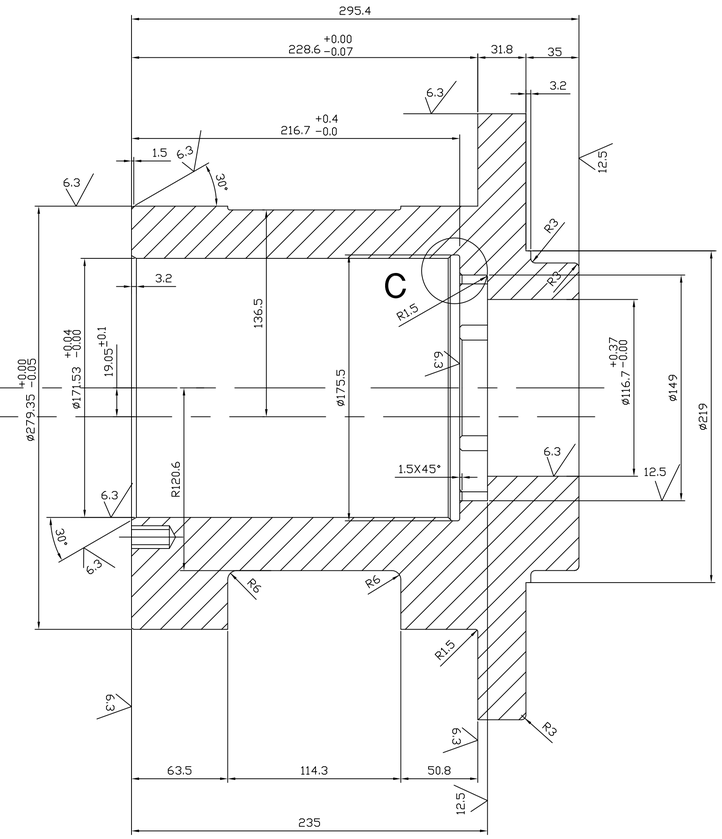

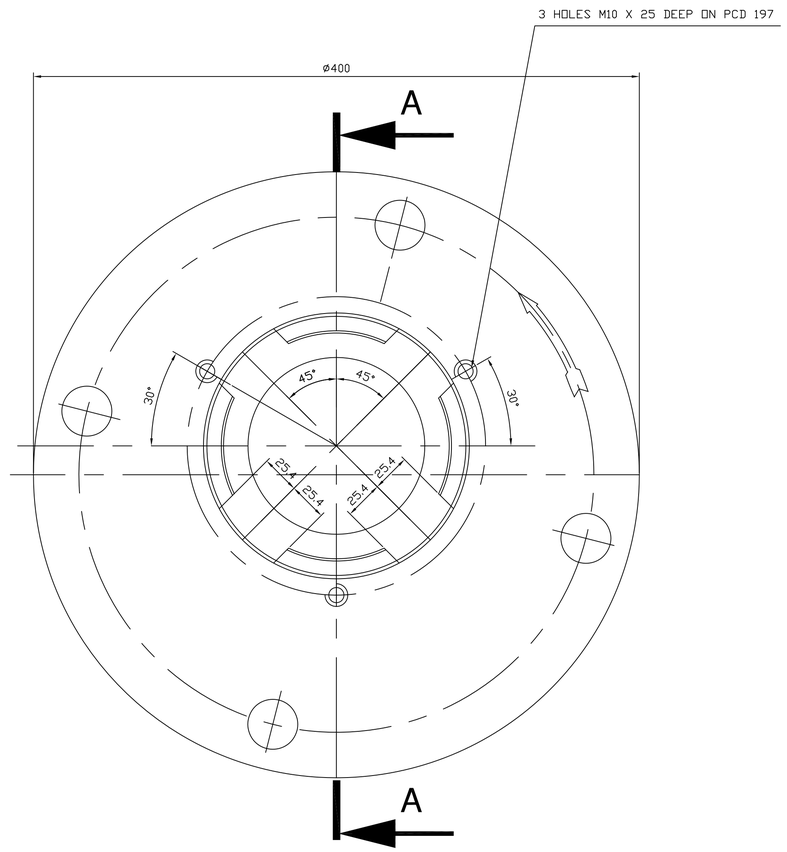

SECTION-AA

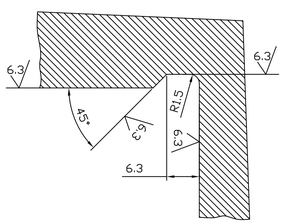

DETAIL C

ITEM NO.	DESCRIPTION	DRAWING NO.	VAR. NO.	RAW MATERIAL SIZE OR CASTING DRG. NO. OR FORGING DRG. NO.	MATERIAL CODE	NET WT.	GROSS WT.
	CASTING				BA9110307036	81.00	
					AA19703		
					MATERIAL SPECN.	QUANTITY	

THE FOLLOWING CONDITIONS APPLY EXCEPT OTHERWISE STATED.

1. REF. TO HY0230261 FOR UNSPECIFIED TOLERANCES.
2. CHAMFER M/CD. SHARP EDGES 1.2 TO 1.0 AT 45°.
3. INTERNAL M/CD. CORNER RADII 1 TO 0.7
4. THE SURFACE ROUGHNESS WHERE-EVER NOT SHOWN SHALL BE TAKEN FROM THE SURFACE ROUGHNESS SHOWN OUT SIDE THE BACK SLASH GIVEN OR THE TOP MOST RIGHT CORNER OF THE DRG.

TYPE OF PRODUCT
NAME OF CUSTOMER/PROJECT — 803 XRP

BHARAT HEAVY ELECTRICALS LIMITED
HYDERABAD

	NAME	SIGN.	DATE	NO.OF VAR.
DRN.	E.M.ASHOK		2-6-2K	
CHD.	N.D.S		2-6-2K	
APPD.	K.M.RAO		2-6-2K	

DEPT.	UNTOL. DIMS. GR.	SCALE	WEIGHT (KG)	REF. TO ASSY DRG.	ITEM NO.	NO.OF ITEMS
446	¢/M/¢	1:2 &2:1	81.00	0-61-076-00022		
CODE PULV.						

TITLE: TRUNNION SHAFT END CAP (FREE END)

CARD CODE

DRAWING NO. 1-61-376-00019 — REV. 04

SHEET NO. — NO OF SHEETS

REV.	DATE	ALTERED	CHD./APPD.	ZONE
04	3.6.2K	E.M.ASHOK	N.D.S	

DRAWING REDRAWNBY INCORPORATING ALL PREVIOUS REVISIONS.

THE INFORMATION ON THIS DOCUMENT IS THE PROPERTY OF BHARAT HEAVY ELECTRICALS LIMITED.
IT MUST NOT BE USED DIRECTLY OR INDIRECTLY IN ANY WAY DETRIMENTAL TO THE INTEREST OF THE COMPANY

COMPUTER FILE NAME 16100019

INVENTORY NO | SIGN. AND DATE | REF. DRG. NO.

FIRST ANGLE PROJECTION

(ALL DIMENSIONS ARE IN mm)

DRG. NO. 1-61576-00029 SH. 01 OF 01

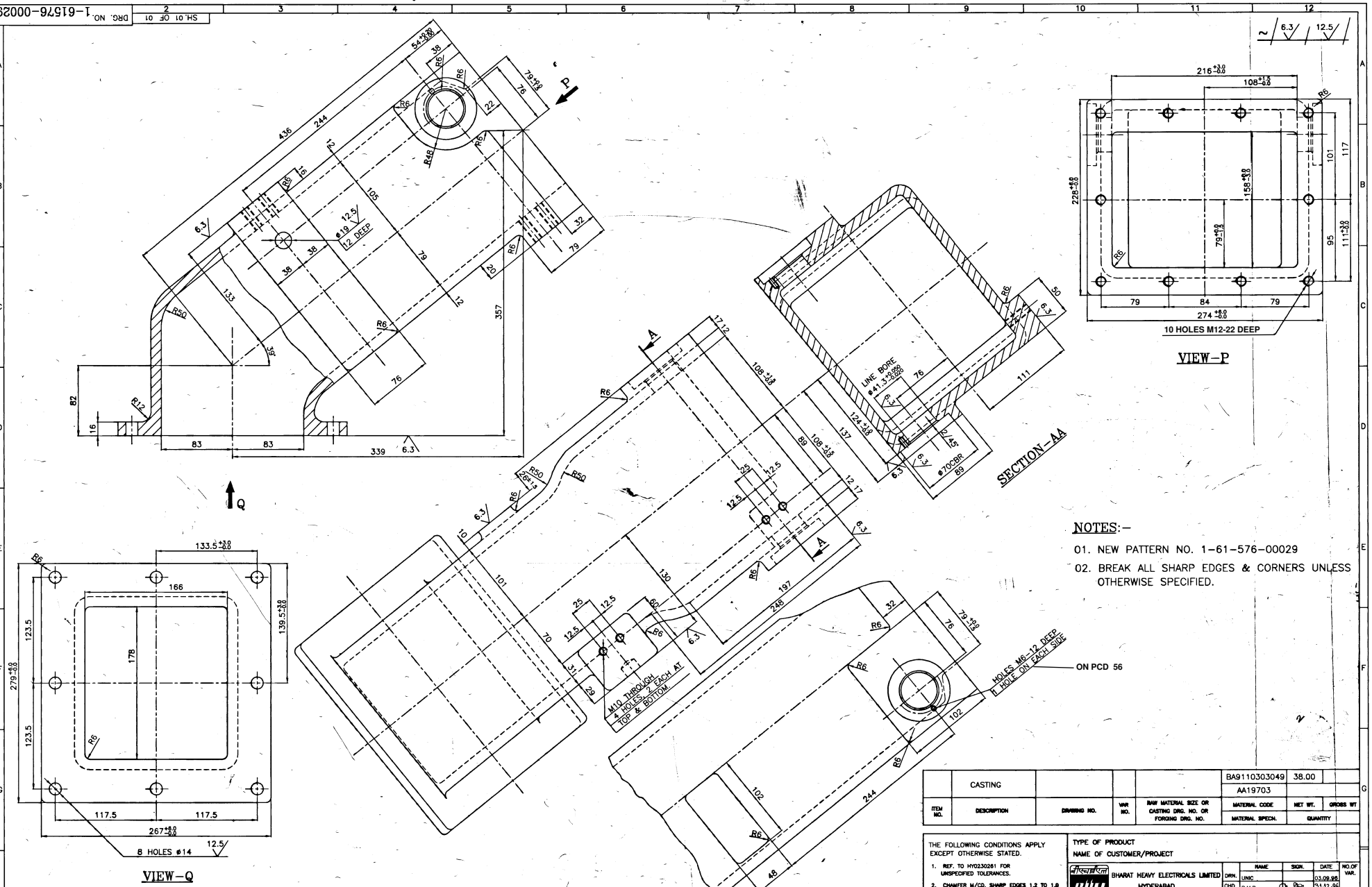

NOTES:-

01. NEW PATTERN NO. 1-61-576-00029

02. BREAK ALL SHARP EDGES & CORNERS UNLESS OTHERWISE SPECIFIED.

ITEM NO.	DESCRIPTION	DRAWING NO.	VAR NO.	RAW MATERIAL SIZE OR CASTING DRG. NO. OR FORGING DRG. NO.	MATERIAL CODE / MATERIAL SPECN.	NET WT. / QUANTITY	GROSS WT
	CASTING				BA9110303049 / AA19703	38.00	

THE FOLLOWING CONDITIONS APPLY EXCEPT OTHERWISE STATED.

1. REF. TO HY0230261 FOR UNSPECIFIED TOLERANCES.
2. CHAMFER M/CD. SHARP EDGES 1.2 TO 1.0 AT 45°
3. INTERNAL M/CD. CORNER RADII 1 TO 0.7
4. THE SURFACE ROUGHNESS WHERE-EVER NOT SHOWN SHALL BE TAKEN FROM THE SURFACE ROUGHNESS SHOWN OUT SIDE THE BACK BLASH GIVEN OR THE TOP MOST RIGHT CORNER OF THE DRG.

TYPE OF PRODUCT

NAME OF CUSTOMER/PROJECT

BHARAT HEAVY ELECTRICALS LIMITED HYDERABAD

	NAME	SIGN.	DATE
DRN.	UNIC		03.09.96
CHD.	B.M.R		31.12.96
APPD.	S.RAMANNA		31.12.96

DEPT. PULV ENGG. CODE 445 | UNTOL. DIMS. GR. E/M/F | SCALE 1:2 | WEIGHT (KG) 38.00 | REF. TO ASSY DRG. — | ITEM NO. | NO. OF ITEMS

TITLE: TRAMP IRON SPOUT BODY

CARD CODE | DRAWING NO. 1-61-576-00029 | REV. 03

SHEET NO. 01 | NO OF SHEETS 01

REV.	DATE	ALTERED	APPD.
		CHD.	

REV.	DATE	ALTERED	APPD.
	03.12.06	CHD. V.Kumar	

10 HOLE M12 WAS M22

REV.	DATE	ALTERED	APPD.
02	03.09.96	CHD. UNIC	

DRAWING REDRAWN BY INCORPORATING THE PREVIOUS REVISION

THE INFORMATION ON THIS DOCUMENT IS THE PROPERTY OF BHARAT HEAVY ELECTRICALS LIMITED. IT MUST NOT BE USED DIRECTLY OR INDIRECTLY IN ANY WAY DETRIMENTAL TO THE INTEREST OF THE COMPANY

COMPUTER FILE NAME 1610029.DWG | REF. DRG. NO. | SIGN. AND DATE | INVENTORY NO

FIRST ANGLE PROJECTION

(ALL DIMENSIONS ARE IN mm)

DJC

DRG.NO. 2-61-100-00566

SECTION A-A

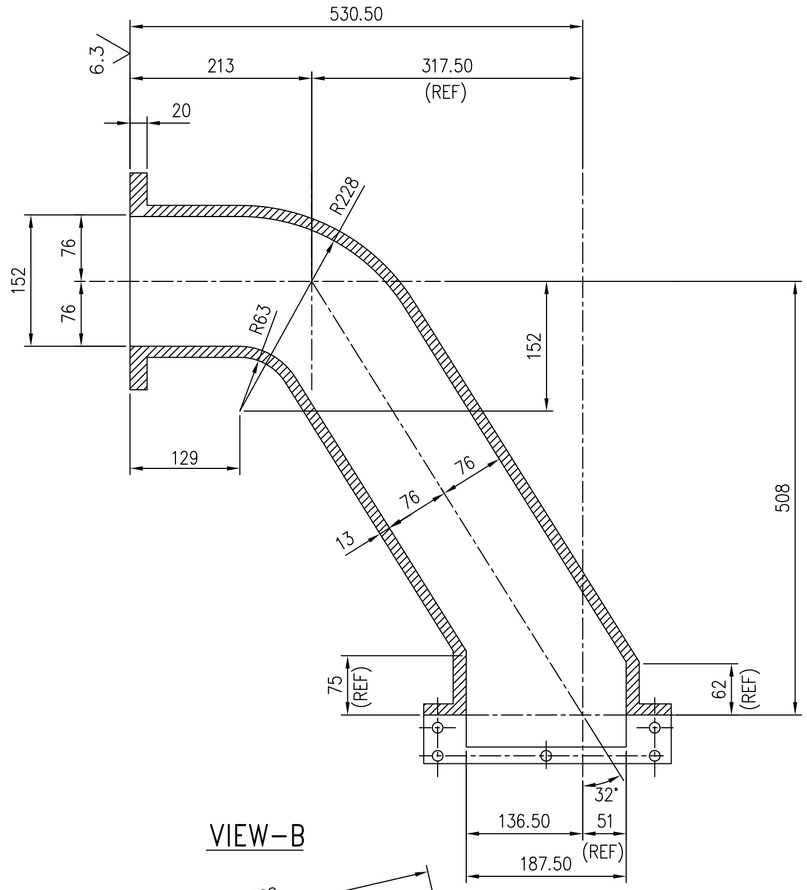

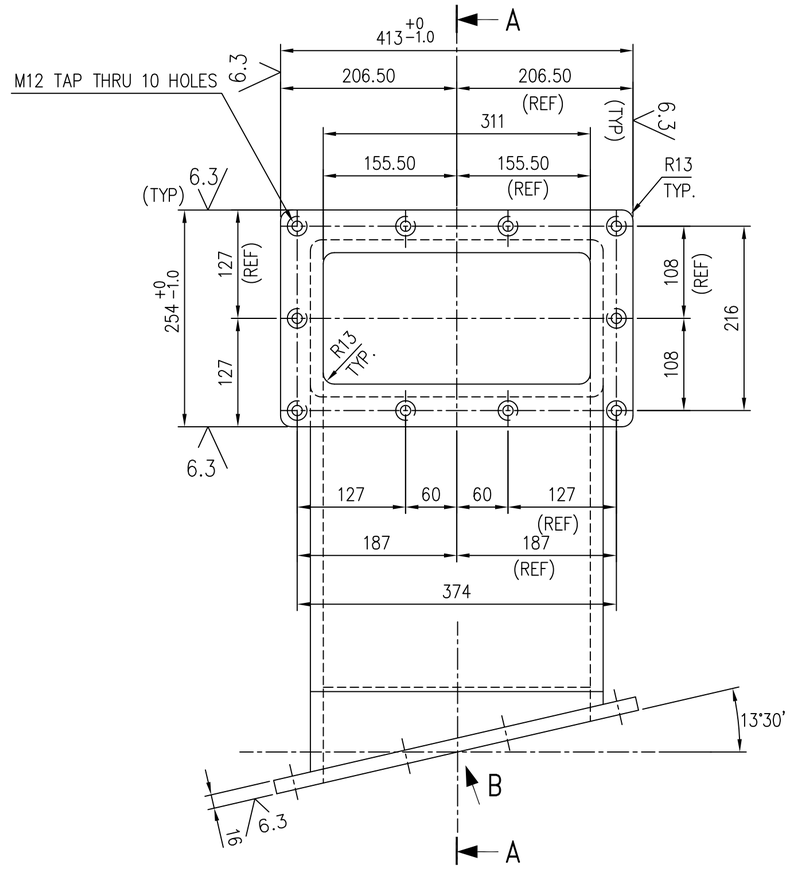

VIEW-B

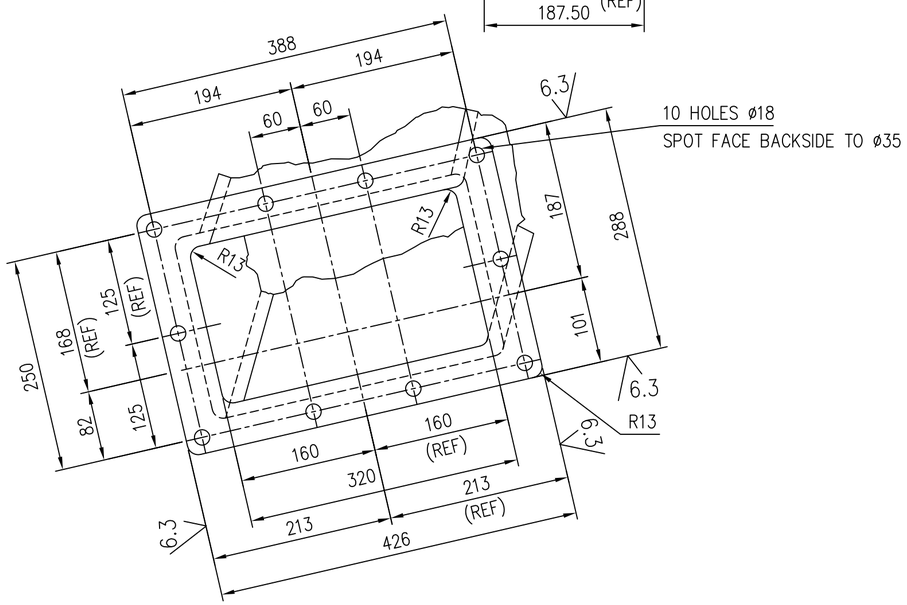

NOTES:

1. ALL FILLETS AND RADII TO BE 6mm UNLESS OTHERWISE SPECIFIED.

ITEM NO	DESCRIPTION	DRAWING NO.	VAR. NO.	RAW MATERIAL SIZE OR CASTING DRG.NO. OR FORGING DRG.NO.	MATERIAL CODE / MATERIAL SPECN.	UNIT WT. / QUANTITY
	CASTING	2-61-196-00224			BA9110303006 / AA19703	99.20

THE FOLLOWING CONDITIONS APPLY EXCEPT OTHERWISE STATED...

1. REF.TO HY0230261 FOR UNSPECIFIED TOLERANCES.
2. CHAMFER M/CD SHARP EDGES 1.2 TO 1.0 AT 45°.
3. INTERNAL M/CD CORNER RADII 1 TO 0.7.
4. THE SURFACE ROUGHNESS WHEREVER NOT SHOWN SHALL BE TAKEN FROM THE SURFACE ROUGHNESS SHOWN OUT SIDE BACK SLASHES GIVEN AT THE TOP MOST RIGHT CORNER OF THE DRG.

TYPE OF PRODUCT OR NAME OF CUSTOMER/PROJECT: 1003 XRP BOWL MILL

BHARAT HEAVY ELECTRICALS LTD. HYDERABAD

	NAME	SIGN.	DATE	NO.OF VAR.
DRN.	E.M.ASHOK		10.12.98	–
CHD.	N.D.S		14.12.98	
APPD.	S.G		15.12.98	

DEPT.	GRADE OF TOL. DIM.	SCALE	WEIGHT(Kg)	REF. TO ASSY DRG.	ITEM No.	NO.OF ITEMS
PULV. ENGG. CODE 446	¢/M/f	1:5	99.20	2-61-196-00224	28	–

TITLE: TRAMP IRON SPOUT BODY

DRAWING No.. 2-61-100-00566 REV. 05

SHEET No. 1 No. OF SHEETS 1

REV.	DATE	ALTERED / CHECKED	APPD.	ZONE
05	06.03.03	ALTERED E.M.ASHOK, CHECKED NDS	APPD S.G	MACHINING ADDED ON DIMS.426 AND 288.
04	12.11.01	ALTERED E.M.ASHOK, CHECKED NDS	APPD. S.G	TOLERANCE +0/−1.0 ADDED ON DIMS. 413 & 254.
03	17.12.98	ALTERED, CHECKED	APPD.	DRAWING REDRAWN ON CAD INCORPORATING ALL THE PREVIOUS REVISIONS.

THE INFORMATION ON THIS DOCUMENT IS THE PROPERTY OF BHARAT HEAVY ELECTRICALS LIMITED. IT MUST NOT BE USED DIRECTLY OR INDIRECTLY IN ANY WAY DETRIMENTAL TO THE INTEREST OF THE COMPANY.

COMP. FILE NAME 26100566.DWG

REF.DRG.NO.

INVENTORY NO.

TD-150/REV.NO.03 SIZE A2

FIRST ANGLE PROJECTION

(ALL DIMENSIONS ARE IN mm)

DRG. NO. 2-61-176-00001

THE INFORMATION ON THIS DOCUMENT IS THE PROPERTY OF BHARAT HEAVY ELECTRICALS LIMITED.
IT MUST NOT BE USED DIRECTLY OR INDIRECTLY IN ANY DETRIMENTAL TO THE INTEREST OF THE COMPANY

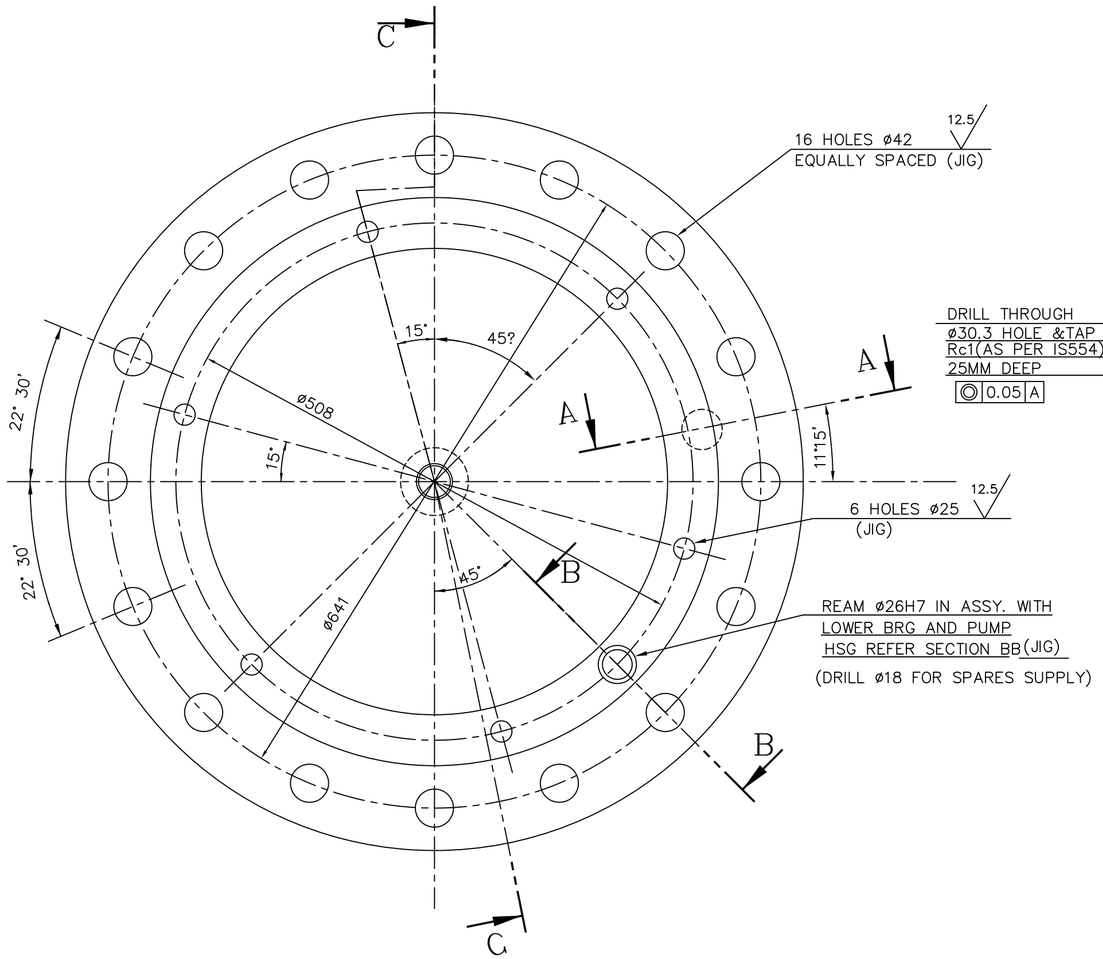

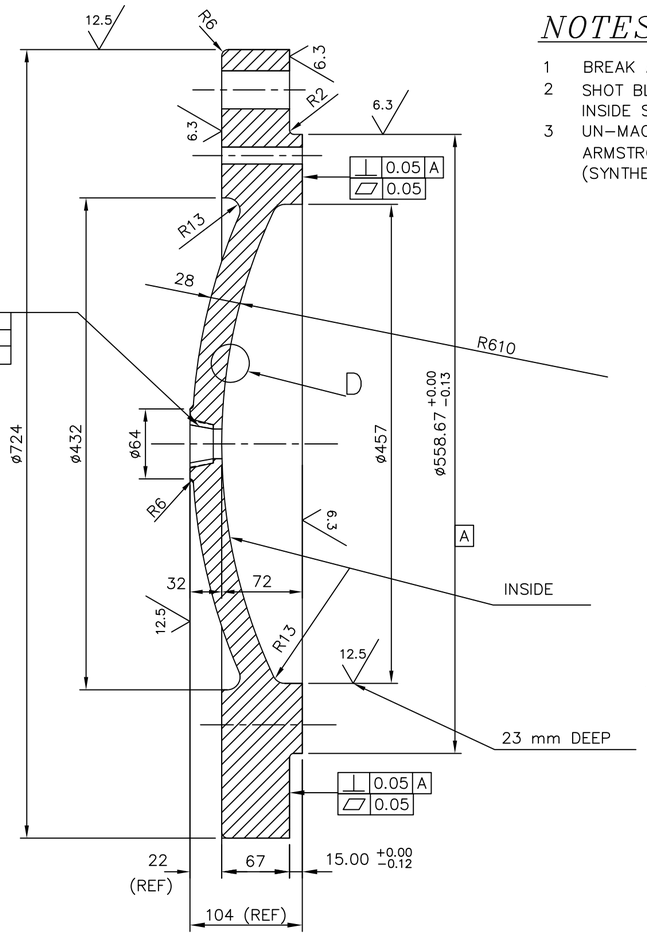

SECTION C–C

NOTES:–

1. BREAK ALL SHARP EDGES.
2. SHOT BLAST ALL SURFACES AT FOUNDRY.
   INSIDE SURFACES MUST BE 100% FREE FROM SCALE AND SAND
3. UN–MACHINED INSIDE SURFACES TO BE COATED WITH
   ARMSTRONG WHITE CRANK CASE SEALER
   (SYNTHETIC CASTING SEALER)

12.5 6.3 3.2

GENERAL DIMENSIONS, LIMITS, FITS & TOLERANCES AS PER PS. HY 0230261

07

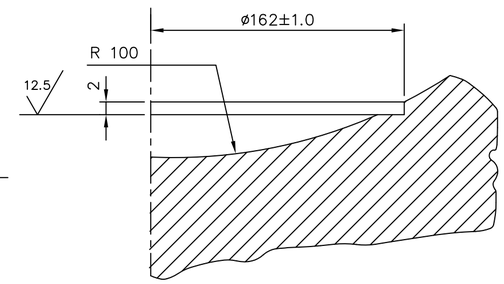

DETAIL–D

06

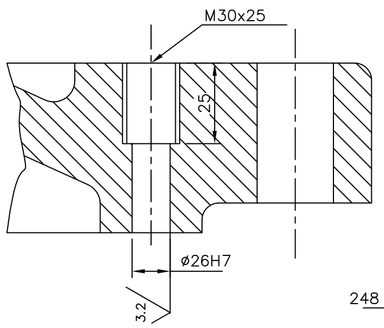

SECTION B–B

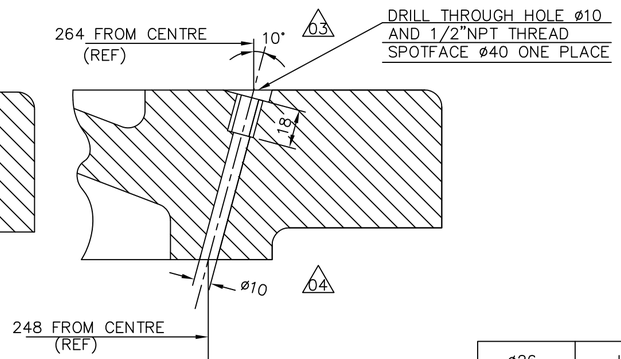

SECTION A–A

CASTING	01		PATTERN No. (20–F–002–062) M–67–047		BA9110306099			125,500		
					BA 19703			1		
DESCRIPTION	ITEM NO.	STD	DRAWING No.		MATERIAL CODE	A C	COMP GROUP	UNIT WEIGHT (Kg)	GNSI	CI	ZONE
					MATERIAL SPECN			QUANTITY			

CARD TYPE–1

ø26	H7	+0.021	−0.000
NOM DIMENSION	TOLERANCE SYMBOL	UPPER	LOWER
		LIMITS	

REV.	DATE	ALTERED
		CHECKED
		APPROVED
ZONE		

TYPE OF PRODUCT OR NAME OF CUSTOMER/PROJECT: 763 XRP BOWL MILL

BHARAT HEAVY ELECTRICALS LTD. HYDERABAD

	NAME	SIGN.	DATE	NO.OF VAR.
DRN.	J.D.C		19–1–79	
CHD.	NDS		20–1–79	
APPD.	S GHATGE		20–1–79	

DEPT. B.M	UNTOL.DIMS.GR.	SCALE	WEIGHT (KG)	REF. TO ASSY DRG.	ITEM NO.	NO.OF ITEM
CODE 446	ℓ/M/P	N.T.S	125.50	1–61–180–90027	6	

TITLE: LOWER BEARING AND PUMP HOUSING COVER

CARD CODE

DRAWING NO. 2–61–176–00001 REV. 09

SHEET NO. 1 NO OF SHEETS 1

REV.	DATE	ALTERED	ZONE	
09	16.08.06	ALTERED CNY CHECKED ERR	ZONE	GEOMETRICAL TOLERANCES ADDED
08	01–07–94	ALTERED CHECKED	ZONE	DRAWING REDRAWN
07	30–7–87	ALTERED CHECKED	ZONE	E3 E1 MACHINING DETAIL – D ADDED TO ACCOMMODATE LIFTING SPACER
06	26–3–84	ALTERED CHECKED	ZONE	5–C 3–F 5–3 RC1 WAS P 1" TR NOTE–3 ALTERED MAT. CODE CHANGED DRILL DIA 10 WAS ø7.5

APPROVED GK

COMP. FILE NAME 00001.DWG

REF. DRG. NO.

SIGN. AND DATE

INVENTORY NO

FIRST ANGLE PROJECTION

(ALL DIMENSIONS ARE IN mm)

DRG. NO. 2-61-176-00006

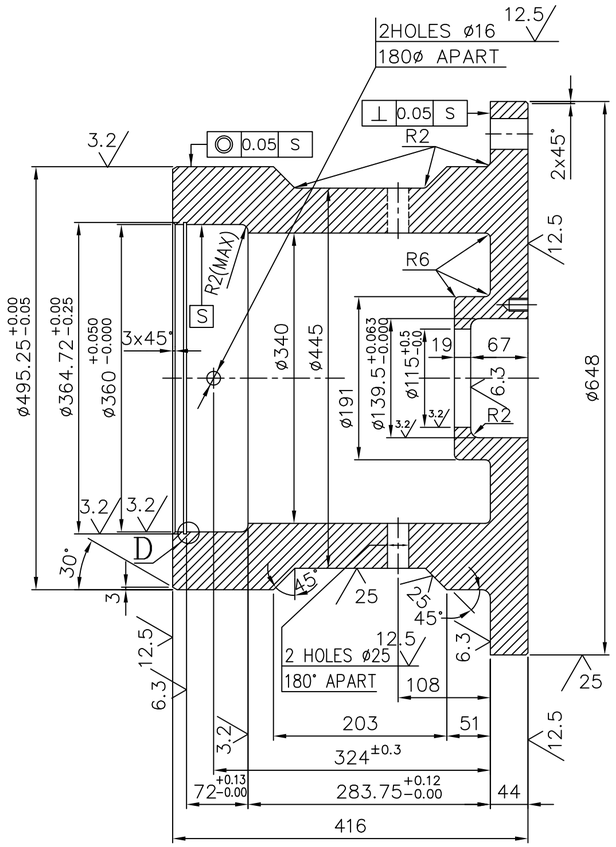

SECTION–AA

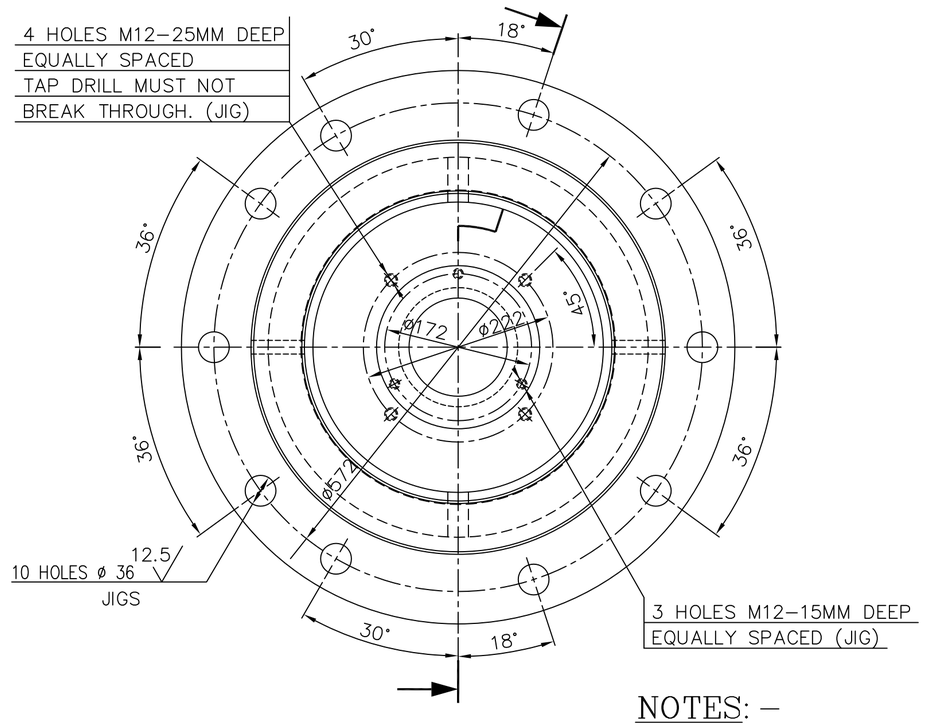

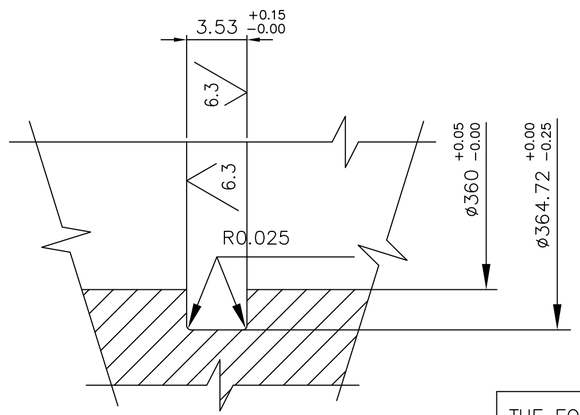

DETAIL–D

NOTES: –

1. REMOVE ALL SHARP EDGES
2. SHOT BLAST ALL SURFACES AT FOUNDARY. INSIDE SURFACES MUST BE 100% FREE FROM SCALE & SAND. ALL INSIDE UNMACHINED SURFACES MUST BE COATED WITH ARM STRONG WHITE CRANK CASE SEALER(SYNTHETIC CASTING SEALER) OTHER SURFACE ARE TO BE PAINTED WITH RED OXIDE PAINT..

ITEM NO.	DESCRIPTION	DRAWING NO.	MATL CODE / MATL SPECN	UNIT WT. / QTY
01	CASTING		BA9110321110 / AA19703	378.0 / 1

THE FOLLOWING CONDITIONS APPLY EXCEPT OTHERWISE STATED.

1. REFER TO HY0230261 FOR UNSPECIFIED TOLERANCES.
2. CHAMFER MACHINED SHARP EDGES 1.2 TO 1.0 AT 45°
3. INTERNAL MACHINE RADII 1 TO 0.7
4. THE SURFACE ROUGHNESS WHERE–EVER NOT SHOWN SHALL BE TAKEN FROM THE SURFACE ROUGHNESS SHOWN OUT SIDE THE BACKSLASH GIVEN AT THE TOP MOST RIGHT CORNER OF THE DRAWING.

TYPE OF PRODUCT OR NAME OF CUSTOMER/PROJECT: 763, 783, 803 ,963, 983 & 1003

BHARAT HEAVY ELECTRICALS LIMITED
HYDERABAD

	NAME	SIGN.	DATE	NO.OF VAR.
DRN.	ACS/PAVAN		06.12.96	01
CHD.	P.V.RAO		06.12.96	
APPD.	G.KISTAIAH		06.12.96	

DEPT.	GRADE OF TOL.DIM.	SCALE	WEIGHT (KG)	REF. TO ASSY DRG.	ITEM NO.	NO.OF ITEMS
PULV–ENGG CODE 4460	E/M/P	1 : 5	378.00	–––––––––––	––	––

TITLE: RADIAL BEARING HOUSING

CARD CODE

DRAWING NO. 2–61–176–00006 REV. 09

SHEET NO. 01 NO OF SHEETS 01

REV.	DATE	ALTERED	CHECKED	APPROVED
09	06.12.96			

ZONE

DRAWING REDRAWN INCORPORATING ALL PREVIOUS ALL PREVOIUS REVISIONS.

THE INFORMATION ON THIS DOCUMENT IS THE PROPERTY OF BHARAT HEAVY ELECTRICALS LIMITED. IT MUST NOT BE USED DIRECTLY OR INDIRECTLY IN ANY WAY DETRIMENTAL TO THE INTEREST OF THE COMPANY

INVENTORY NO | SIGN. AND DATE | REF. DRG. NO. 261006.DWG/1135

FIRST ANGLE PROJECTION

(ALL DIMENSIONS ARE IN mm)

MES

DRG. NO. 2-61-176-00022

SH. 1 OF 1

THE INFORMATION ON THIS DOCUMENT IS THE PROPERTY OF BHARAT HEAVY ELECTRICALS LIMITED. IT MUST NOT BE USED DIRECTLY OR INDIRECTLY IN ANY WAY DETRIMENTAL TO THE INTEREST OF THE COMPANY

COMPUTER FILE NAME 2610022.DWG

REF. DRG. NO.

SIGN. AND DATE

INVENTORY NO

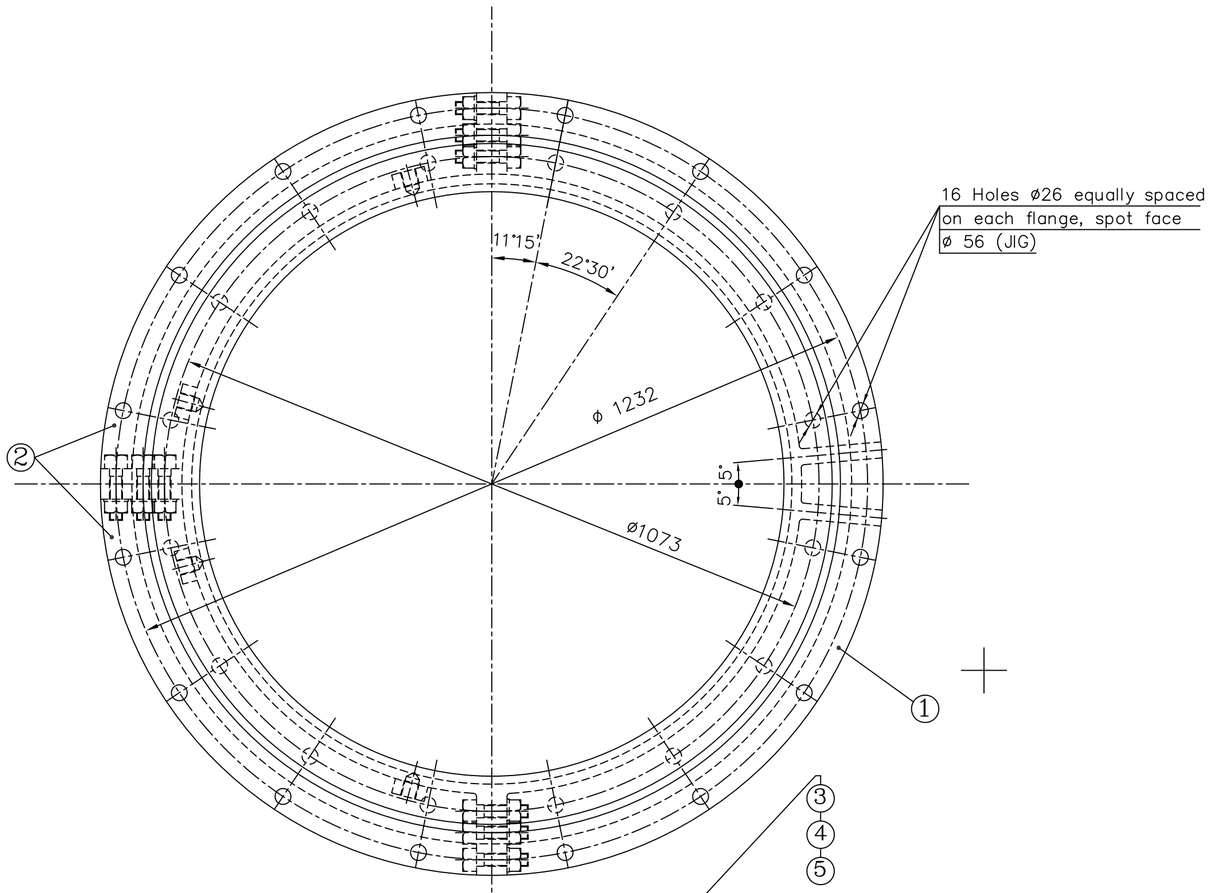

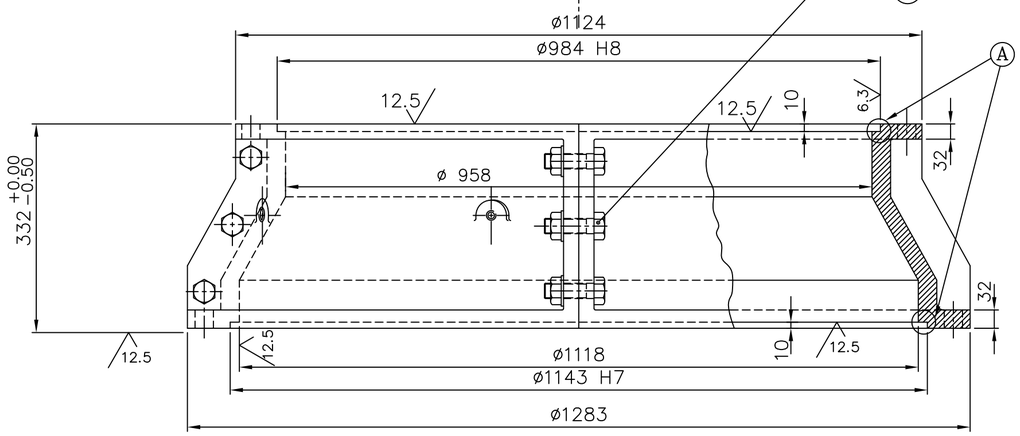

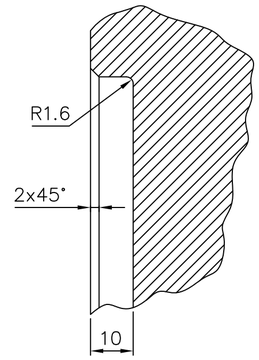

DETAIL– A

SCALE 1:1

6.3 12.5

H8	ø984	+0.140	−0.000
H7	ø1143	+0.105	+0.000
Tolerance Symbol	NOM. SIZE	UPPER	LOWER
		LIMITS	

NOTE: –

Break all sharp edges and corners unless otherwise shown.

ITEM NO	DESCRIPTION	STD	DRAWING NO.	MATERIAL CODE / MATERIAL SPEC.	A C	COMP. GROUP	UNIT / QTY.
05	SPRING WASHER M24	S		AA7164002100			0.03
				AA7164002			9
04	HEX NUT M24	S		HY7151115989			0.11
				AA7151115			9
03	HEX BOLT M24x80	S		HY7111124898			0.40
				AA7111124			9
02	UPPER SKIRT SEGMENT		2-61-176-00024	BA9110353046			85.00
				AA19703			2
01	UPPER SKIRT SEGMENT		2-61-176-00023	BA9110353038			170.00
				AA19703			1

THE FOLLOWING CONDITIONS APPLY EXCEPT OTHERWISE STATED.

1. REF. TO HY0230261 FOR UNSPECIFIED TOLERANCES.
2. CHAMFER M/CD. SHARP EDGES 1.2 TO 1.0 AT 45°
3. INTERNAL M/CD. CORNER RADII 1 TO 0.7
4. THE SURFACE ROUGHNESS WHERE-EVER NOT SHOWN SHALL BE TAKEN FROM THE SURFACE ROUGHNESS SHOWN OUT SIDE THE BACK SLASH GIVEN ON THE TOP MOST RIGHT CORNER OF THE DRG.

REV.	DATE	ALTERED
05	26.07.98	CHD/APPD
ZONE		DRG. REDRAWN INCORPORATING ALL PREVIOUS REVISIONS

TYPE OF PRODUCT OR NAME OF CUSTOMER/PROJECT: 76" BOWL MILL

BHARAT HEAVY ELECTRICALS LIMITED HYDERABAD

	NAME	SIGN.	DATE
DRN.			26.07.98
CHD.	NDS		26.07.98
APPD.	S GHATGE		26.07.98

DEPT.	UNTOL. DIMS.		SCALE	WEIGHT (KG)	REF. TO ASSY. DRG.	ITEM NO.	NO.OF ITEMS
BMD DEPT CODE. 446	GR. ℄/M/F		1:7, 1:1	344.88	1-61-180-90027	90	

TITLE: UPPER SKIRT ASSEMBLY

DRAWING NO. 2-61-176-00022 REV. 05

SHT. No 01 NO. OF SHT. 01

FIRST ANGLE PROJECTION

(ALL DIMENSIONS ARE IN mm)

DRG. NO.2-61-180-90077

THE INFORMATION ON THIS DOCUMENT IS THE PROPERTY OF BHARAT HEAVY ELECTRICALS LIMITED. IT MUST NOT BE USED DIRECTLY OR INDIRECTLY IN ANY WAY DETRIMENTAL TO THE INTEREST OF THE COMPANY

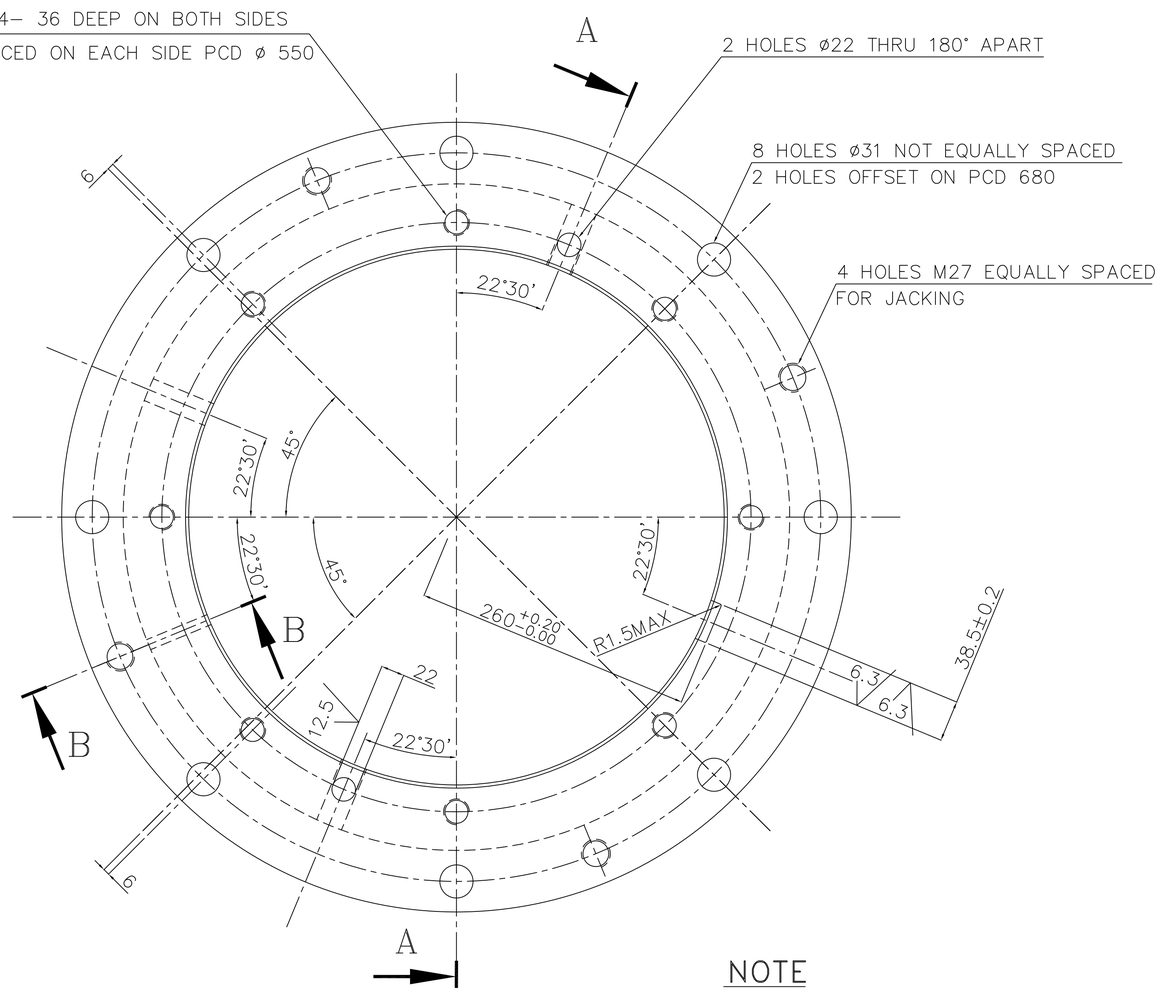

NOTE

1. BREAK ALL SHARP EDGES
2. HYD PATTERN NO. M-67-056

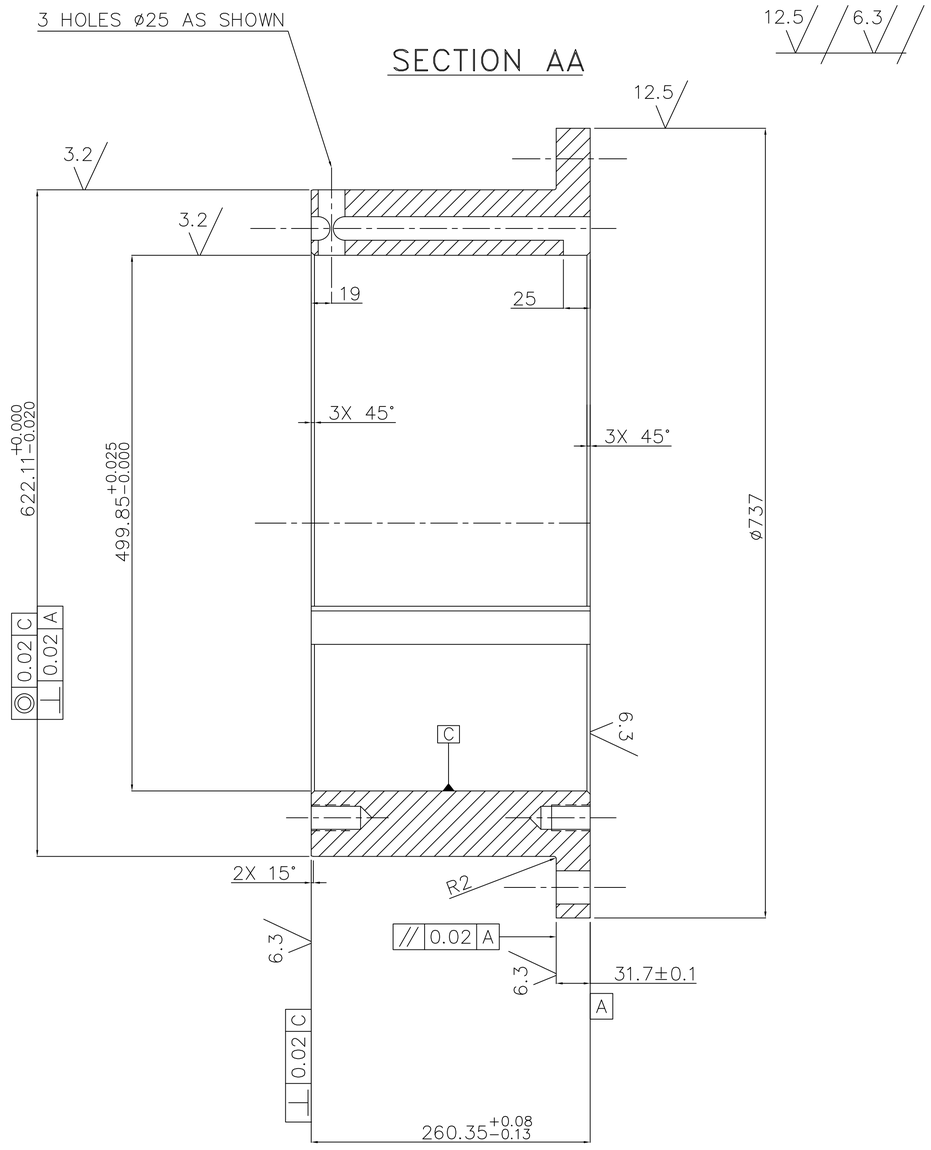

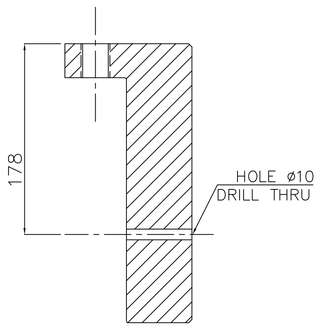

SECTION BB
(ONE PLACE)

ITEM NO.	DESCRIPTION	DRAWING NO.	VAR. NO.	RAW MATERIAL SIZE OR CASTING DRG. NO. OR FORGING DRG. NO.	MATERIAL CODE	NET WT.	GROSS WT.
					BA9110321128	249.40	
					AA 19703		
					MATERIAL SPECN.	QUANTITY	

THE FOLLOWING CONDITIONS APPLY EXCEPT OTHERWISE STATED.

1. REF. TO HY0230261 FOR UNSPECIFIED TOLERANCES.
2. CHAMFER M/CD. SHARP EDGES 1.2 TO 1.0 AT 45°.
3. INTERNAL M/CD. CORNER RADII 1 TO 0.7
4. THE SURFACE ROUGHNESS WHERE-EVER NOT SHOWN SHALL BE TAKEN FROM THE SURFACE ROUGHNESS SHOWN OUT SIDE THE BACK SLASH GIVEN OR THE TOP MOST RIGHT CORNER OF THE DRG.

TYPE OF PRODUCT: 803 XRP MILL

NAME OF CUSTOMER/PROJECT

BHARAT HEAVY ELECTRICALS LIMITED
HYDERABAD

	NAME	SIGN.	DATE	NO.OF VAR.
DRN.	N.D.SAMUEL		06.08.1998	\
CHD.	S.G		06.08.1998	
APPD.	K.M.RAO		06.08.1998	

DEPT.	UNTOL. DIMS. GR.		SCALE	WEIGHT (KG)	REF. TO ASSY DRG.	ITEM NO.	NO.OF ITEMS
PULV ENGG. CODE 446	¢/M/¢		1:5	249.40		33	\

TITLE: UPPER BRG.HSG. (TIGHT FIT)

DRAWING NO. 2-61-180-90077 REV. 05

SHEET NO. 01 NO OF SHEETS 01

REV.	DATE	ALTERED	APPD.	REV.	DATE	ALTERED	APPD.	REV.	DATE	ALTERED	APPD.
		CHD.				CHD.		05	30.6.2006	E.M.A / CHD. AMAN	
ZONE				ZONE				ZONE	DRAWING REDRAWN.		

COMPUTER FILE NAME 26190077

REF. DRG. NO.

SIGN. AND DATE

INVENTORY NO

FIRST ANGLE PROJECTION

(ALL DIMENSIONS ARE IN mm)

DRG. NO. 2-61-200-00397

THE INFORMATION ON THIS DOCUMENT IS THE PROPERTY OF BHARAT HEAVY ELECTRICALS LIMITED. IT MUST NOT BE USED DIRECTLY OR INDIRECTLY IN ANY WAY DETRIMENTAL TO THE INTEREST OF THE COMPANY

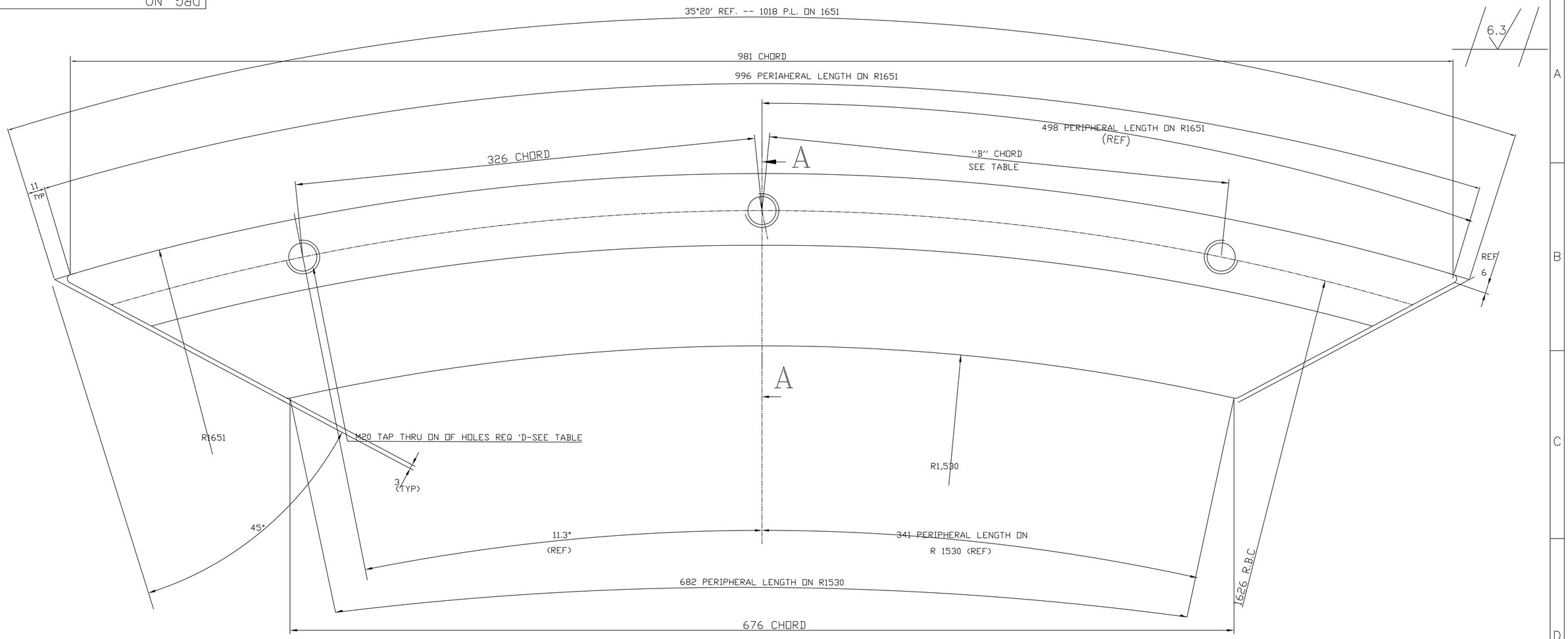

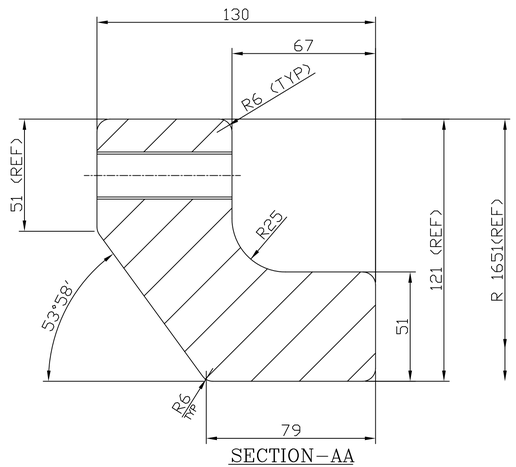

SECTION–AA

PATTERN No. (VAR. No. 02) M–67–124
PATTERN No. (VAR. No. 04) M–67–125

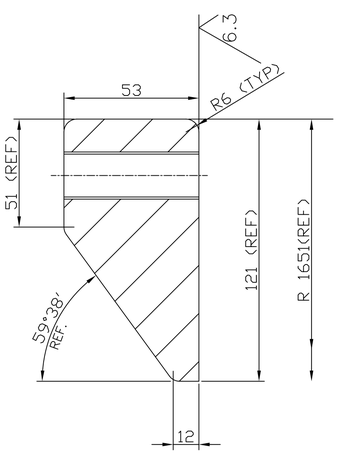

VAR 01 & 03
SECTION–AA

VERIANT No.	No.OF HOLES REQ'D	"B" CHORD
01	2	0
02	2	0
03	3	326
04	3	326

NOTES:–

2. UNLESS OTHERWISE NOTED ALL INSIDE & OUTSIDE RADII TO BE R3.

ITM NO.	DESCRIPTION	DRAWING NO.	VAR. NO.	RAW MATERIAL SIZE OR CASTING DRG. NO. OR FORGING DRG. NO.	MATERIAL CODE / MATERIAL SPECN.	NET WT. / QUANTITY	
	CASTING		04	M–67–125	BA9110233148 / AA19702	58.00	
	CASTING		03	M–67–136	BA9110233202 / AA19702	28.5	
	CASTING		02	M–67–124	BA9110233121 / AA19702	58.00	
	CASTING		01	M–67–135	BA9110233199 / AA19702	28.5	

THE FOLLOWING CONDITIONS APPLY EXCEPT OTHERWISE STATED.

1. REF. TO HY0230261 FOR UNSPECIFIED TOLERANCES.
2. CHAMFER M/CD. SHARP EDGES 1.2 TO 1.0 AT 45°.
3. INTERNAL M/CD. CORNER RADII 1 TO 0.7
4. THE SURFACE ROUGHNESS WHERE–EVER NOT SHOWN SHALL BE TAKEN FROM THE SURFACE ROUGHNESS SHOWN OUT SIDE THE BACK SLASH GIVEN OR THE TOP MOST RIGHT CORNER OF THE DRG.

TYPE OF PRODUCT
NAME OF CUSTOMER/PROJECT — 1003XRPBM

BHARAT HEAVY ELECTRICALS LIMITED
HYDERABAD

	NAME	SIGN.	DATE	NO.OF VAR.
DRN.	E.M.ASHOK		18–2–99	
CHD.	S.GHATGE		18–2–99	
APPD.	K.M.RAO		18–2–99	

DEPT. PUL.V ENGG. CODE 446	UNTOL. DIMS. GR. ¢/M/¢		SCALE 1:3	WEIGHT (KG) /	REF. TO ASSY DRG. 0.61.200.00584	ITEM NO.	NO.OF ITEMS 20

TITLE
MILLSIDE LINER BOTTOM

DRAWING NO. 2–61–200–00397 — REV. 04

SHEET NO. 01 — NO OF SHEETS 01

REV.	DATE	ALTERED	APPD.
		CHD.	
04	1.3.2001	CHD.	
03	18–02–99	CHD. S.GHATGE	K.M.RAO

ZONE

FOR VAR 01 & 03–DIMNS 53 & 59° 38' WERE 63 & 59°58' RESPLY. M/C 6.3 ADDED. WT. WAS 36.5.

DRG REDRAWN INCORPORATING ALL PREVIOUS REVISIONS. NOTE 1 DELETED.

COMPUTER FILE NAME 26100397 | REF. DRG. NO. | SIGN. AND DATE | INVENTORY NO

FIRST ANGLE PROJECTION

(ALL DIMENSIONS ARE IN mm)

DRG.NO. 2-61-200-00399

THE INFORMATION ON THIS DOCUMENT IS THE PROPERTY OF BHARAT HEAVY ELECTRICALS LIMITED.
IT MUST NOT BE USED DIRECTLY OR INDIRECTLY IN ANY WAY DETRIMENTAL TO THE INTEREST OF THE COMPANY.

COMP. FILE NAME 26100399.DWG

REF.DRG.NO.

INVENTORY NO.

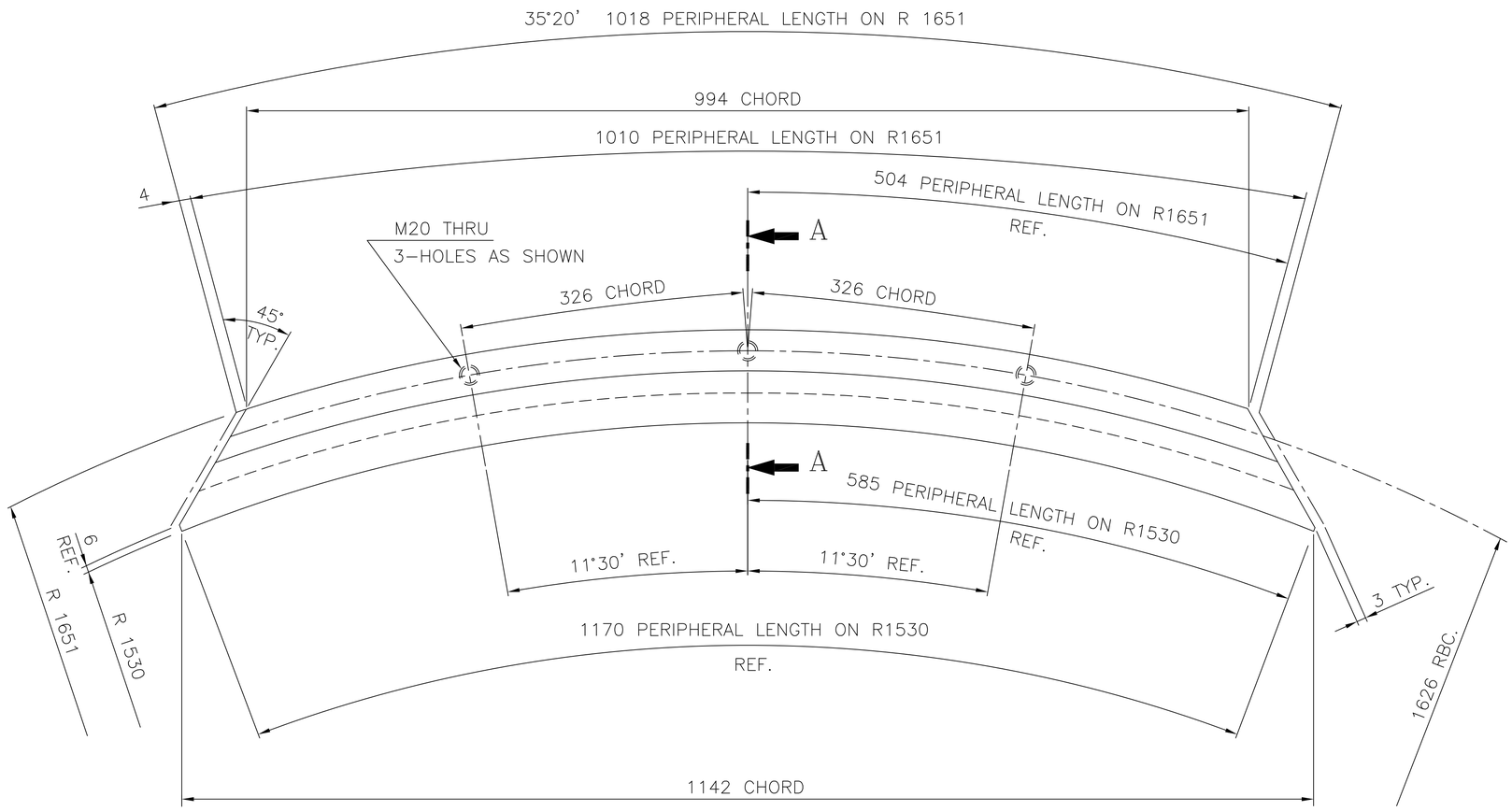

6.3

VARIANT.NO.	PATTERN NO.
01	M-67-137
02	M-67-123

NOTES :-

2. UNLESS OTHERWISE NOTED ALL INSIDE & OUTSIDE RADII TO BE R3

SECTION-AA

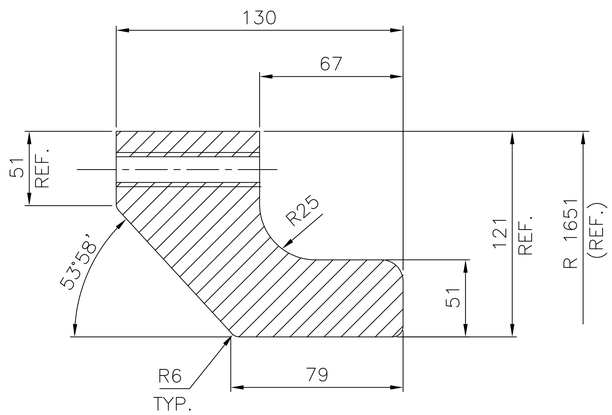

WITH SEP. BODY LINERS
(VARIANT NO.02)

SECTION-AA

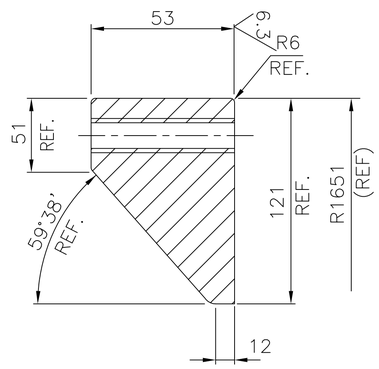

WITH VANE WHEEL
(VARIANT NO.01

PART NO. - SEE SECTION-AA
PART NO. - SEE SECTION-AA

ITEM NO	DESCRIPTION	DRAWING NO.	VAR. NO.	RAW MATERIAL SIZE OR CASTING DRG.NO. OR FORGING DRG.NO.	MATERIAL CODE / MATERIAL SPECN.	NET WT. / QUANTITY	GROSS WT.
02	CASTING				BA9110233130 / AA19702	75.00	
01	CASTING				BA9110233210 / AA19702	38.00	

THE FOLLOWING CONDITIONS APPLY EXCEPT OTHERWISE STATED...

1. REF.TO HY0230261 FOR UNSPECIFIED TOLERANCES.
2. CHAMFER M/CD SHARP EDGES 1.2 TO 1.0 AT 45°.
3. INTERNAL M/CD CORNER RADII 1 TO 0.7.
4. THE SURFACE ROUGHNESS WHEREVER NOT SHOWN SHALL BE TAKEN FROM THE SURFACE ROUGHNESS SHOWN OUT SIDE BACK SLASHES GIVEN AT THE TOP MOST RIGHT CORNER OF THE DRG.

TYPE OF PRODUCT OR NAME OF CUSTOMER/PROJECT: 1003 XRP BM

BHARAT HEAVY ELECTRICALS LTD. HYDERABAD

	NAME	SIGN.	DATE
DRN.	N.D.SAMUEL		2.1.99
CHD.	S.GHATGE		2.1.99
APPD.	K.M.RAO		2.1.99

NO.OF VAR. -NA-

DEPT. PULV.ENGG. | CODE 446 | SCALE N.T.S | WEIGHT(Kg) SEE TABLE | REF. TO ASSY DRG. (C-101-01196-0) SEE TABLE | ITEM NO. -NA- | NO.OF ITEMS -NA-

TITLE: MILL SIDE LINER-BOTTEM

DRAWING NO. 2-61-200-00399 | REV. 04

SHEET NO. 01 | NO OF SHEETS 01

REV.	DATE	ALTERED / CHECKED / APPD.	ZONE	
04	1.3.2001		E4	FOR VAR 01,DIMNS 53 & 59°38' WERE 63&53°58' RESPLY. M/C 6.3 ADDED. WT. WAS 48.00
03	2.1.98			DRAWING RETRACED NOTE 1 DELETED.
02	3.12.96			M20 WAS 3/4" 10 UNC TAP
01	7.3.85			MAT.CODE, MAT SPEC. & PATTERN. NO. ADDED

TD-150/REV.NO.03 SIZE A2

FIRST ANGLE PROJECTION

(ALL DIMENSIONS ARE IN mm)

DRG.NO. 2-61-200-00404

THE INFORMATION ON THIS DOCUMENT IS THE PROPERTY OF BHARAT HEAVY ELECTRICALS LIMITED.
IT MUST NOT BE USED DIRECTLY OR INDIRECTLY IN ANY WAY DETRIMENTAL TO THE INTEREST OF THE COMPANY.

COMP. FILE NAME 26100404.DWG

REF.DRG.NO.

INVENTORY NO.

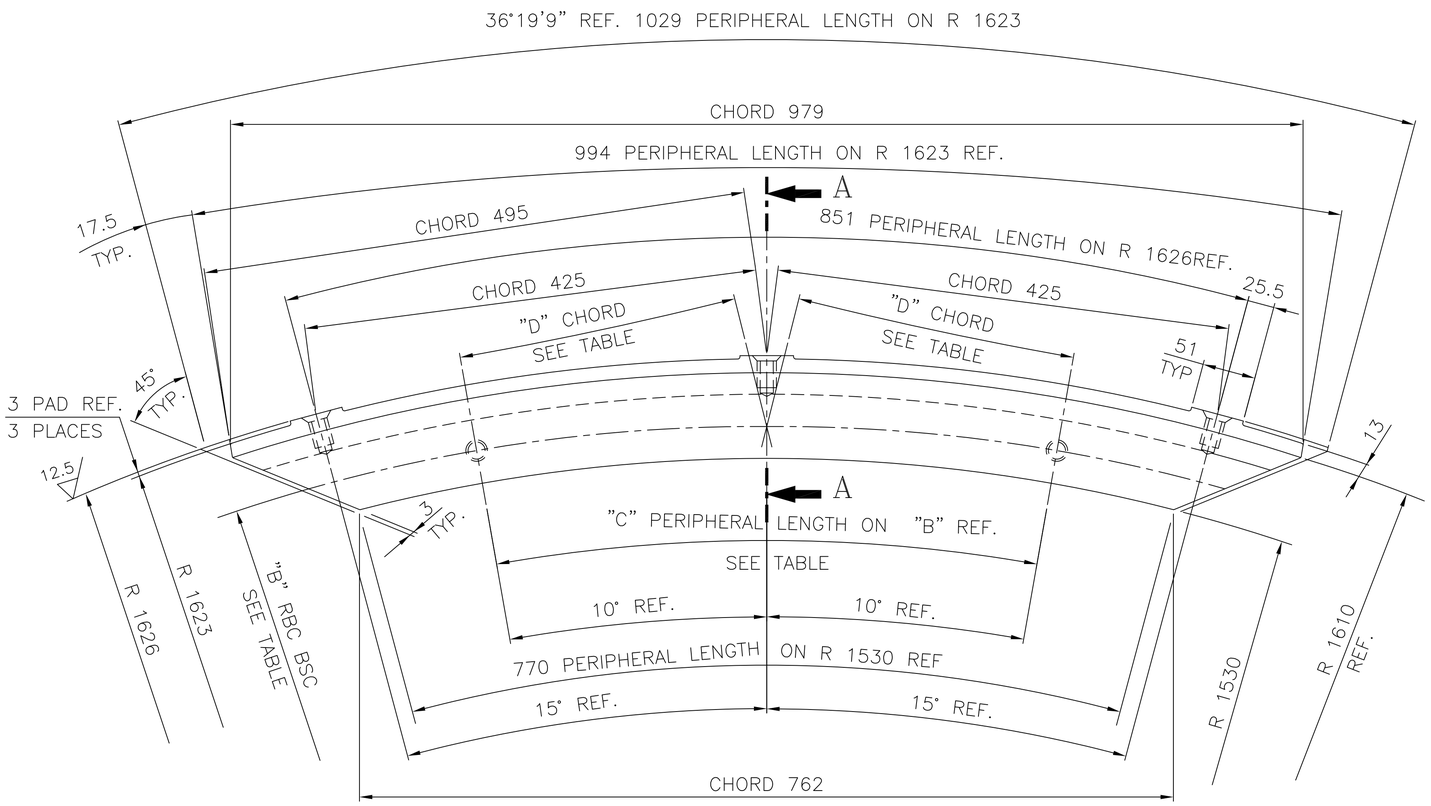

VARIANT.NO.	"B"	"C"	"D"
01	1572	549	274
02	1556	543	271

NOTES :-

2. UNLESS OTHERWISE NOTED ALL INSIDE & OUTSIDE RADII TO BE R3
3. TAP DRILL MUST NOT BREAK THROUGH

SECTION-AA

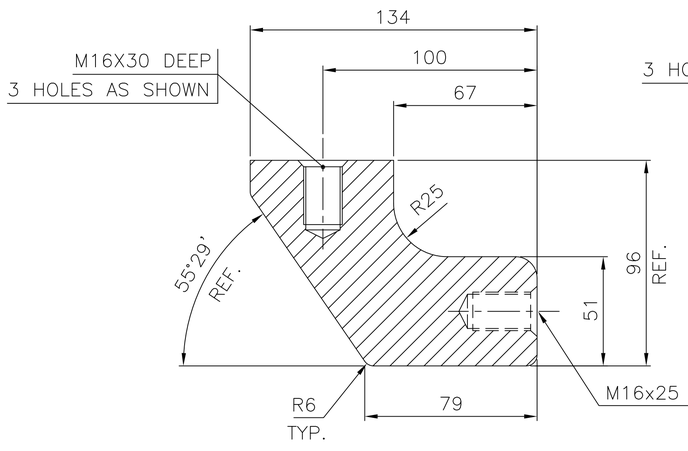

WITH SEPERATOR BODY LINER
(VARIANT NO.02)

SECTION-AA

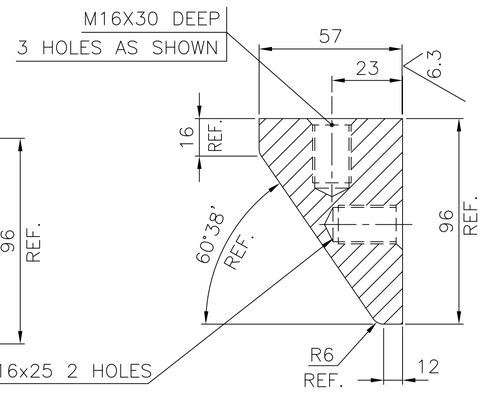

WITH VANE WHEEL
(VARIANT NO.01)

PATTERN NO. (VAR.NO.02) M-67-127
PATTERN NO (VAR.NO.01) M-67-138

ITEM NO	DESCRIPTION	DRAWING NO.	VAR. NO.	RAW MATERIAL SIZE OR CASTING DRG.NO. OR FORGING DRG.NO.	MATERIAL CODE / MATERIAL SPECN.	NET WT. / QUANTITY	GROSS WT.
02	CASTING		02		BA9110233156 / AA19702	46.50	
01	CASTING		01		BA9110233229 / AA19102	18.00	

THE FOLLOWING CONDITIONS APPLY EXCEPT OTHERWISE STATED...

1. REF.TO HY0230261 FOR UNSPECIFIED TOLERANCES.
2. CHAMFER M/CD SHARP EDGES 1.2 TO 1.0 AT 45°.
3. INTERNAL M/CD CORNER RADII 1 TO 0.7.
4. THE SURFACE ROUGHNESS WHEREVER NOT SHOWN SHALL BE TAKEN FROM THE SURFACE ROUGHNESS SHOWN OUT SIDE BACK SLASHES GIVEN AT THE TOP MOST RIGHT CORNER OF THE DRG.

TYPE OF PRODUCT OR NAME OF CUSTOMER/PROJECT: 1003 XRP BM

BHARAT HEAVY ELECTRICALS LTD. HYDERABAD

	NAME	SIGN.	DATE
DRN.	N.D.SAMUEL		2.1.98
CHD.	S.GHATGE		2.1.98
APPD.	K.M.RAO		2.1.98

NO.OF VAR. -NA-

DEPT.	SCALE	WEIGHT(Kg)	REF. TO ASSY DRG.	ITEM NO.	NO.OF ITEMS
PULV.ENGG.	N.T.S	SEE TABLE	(C-101-01153-0) 0-61-200-00584	-NA-	02
CODE 446					

TITLE: MILL SIDE LINER-BOTTEM

DRAWING NO. 2-61-200-00404 REV. 04

SHEET NO. 01 NO OF SHEETS 01

REV.	DATE	ALTERED / CHECKED / APPD.	ZONE	
04	1.3.2001		D4	FOR VAR 01,DIMNS 57,23&60°38' WERE 67,33&55°29' RESPLY M/C 6.3 ADDED. WT WAS 24.00.
03	2.1.98			DRAWING RETRACED NOTE 1 DELETED.
02	3.12.96			M16 WAS 5/8" ATTENTION NOTE DELETED
01	7.3.85			MAT.CODE, MAT SPEC. & PATTERN. NO. ADDED

TD-150/REV.NO.03 SIZE A2

FIRST ANGLE PROJECTION

(ALL DIMENSIONS ARE IN mm)

DRG.NO. 2-61-200-00408

THE INFORMATION ON THIS DOCUMENT IS THE PROPERTY OF BHARAT HEAVY ELECTRICALS LIMITED.
IT MUST NOT BE USED DIRECTLY OR INDIRECTLY IN ANY WAY DETRIMENTAL TO THE INTEREST OF THE COMPANY.

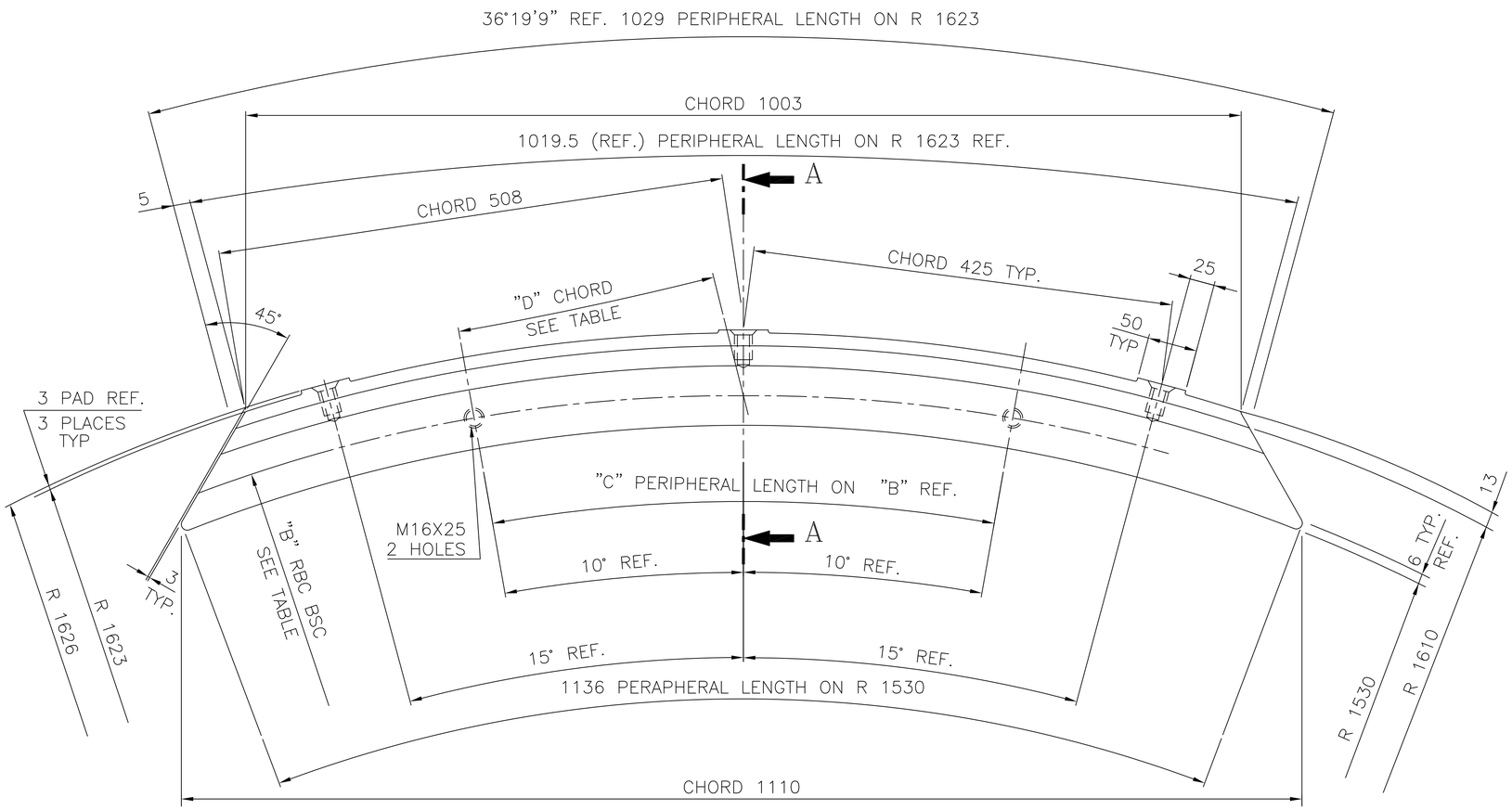

6.3

VARIANT.NO.	"B"	"C"	"D"
01	1572	549	274
02	1556	543	271

NOTES :-

2. UNLESS OTHERWISE NOTED ALL INSIDE & OUTSIDE RADII TO BE R3
3. TAP DRILL MUST NOT BREAK THROUGH

PATTERN NO. (VAR.NO.02) M-67-126
PATTERN NO (VAR.NO.01) M-67-139

SECTION-AA

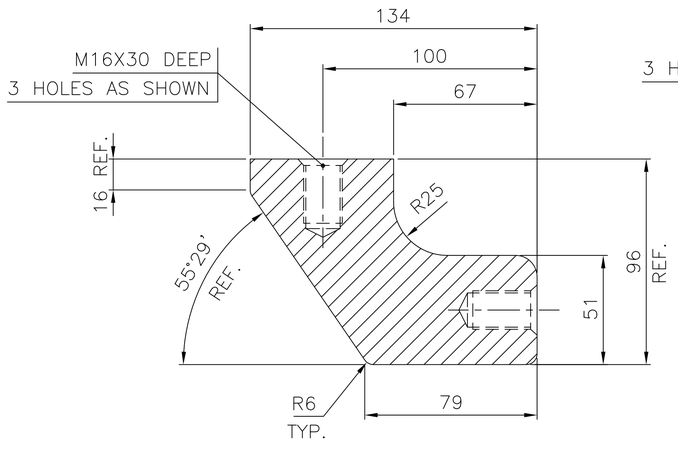

WITH SEP BODY LINERS
(VARIANT NO.02)

SECTION-AA

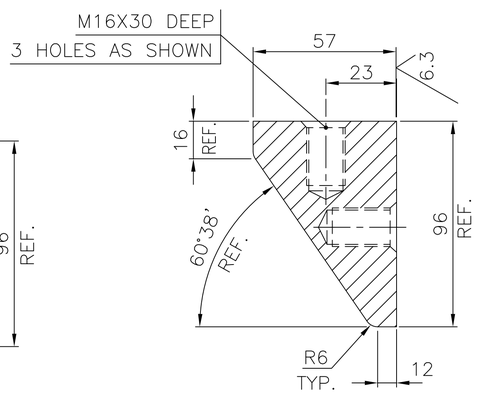

WITH VANE WHEEL
(VARIANT NO.01)

ITEM NO	DESCRIPTION	DRAWING NO.	VAR. NO.	RAW MATERIAL SIZE OR CASTING DRG.NO. OR FORGING DRG.NO.	MATERIAL CODE / MATERIAL SPECN.	NET WT. / QUANTITY	GROSS WT.
02	CASTING				BA9110233164 / AA19702	56.00	
01	CASTING				BA9110233237 / AA19702	22.60	

THE FOLLOWING CONDITIONS APPLY EXCEPT OTHERWISE STATED...

1. REF.TO HY0230261 FOR UNSPECIFIED TOLERANCES.
2. CHAMFER M/CD SHARP EDGES 1.2 TO 1.0 AT 45°.
3. INTERNAL M/CD CORNER RADII 1 TO 0.7.
4. THE SURFACE ROUGHNESS WHEREVER NOT SHOWN SHALL BE TAKEN FROM THE SURFACE ROUGHNESS SHOWN OUT SIDE BACK SLASHES GIVEN AT THE TOP MOST RIGHT CORNER OF THE DRG.

TYPE OF PRODUCT OR NAME OF CUSTOMER/PROJECT: 1003 XRP BM

BHARAT HEAVY ELECTRICALS LTD. HYDERABAD

	NAME	SIGN.	DATE
DRN.	N.D.SAMUEL		2.1.98
CHD.	S.GHATGE		2.1.98
APPD.	K.M.RAO		2.1.98

NO.OF VAR. -NA-

DEPT.	SCALE	WEIGHT(Kg)	REF. TO ASSY DRG.	ITEM NO.	NO.OF ITEMS
PULV.ENGG.	N.T.S	SEE TABLE	(C-101-01168-0) 0-61-300-00584	-NA-	-NA-
CODE 446					

TITLE: MILL SIDE BOTTOM-LINER

DRAWING NO. 2-61-200-00408 REV. 04

SHEET NO. 01 NO OF SHEETS 01

REV.	DATE	ALTERED	CHECKED	APPD.	ZONE	
04	1.3.2001				ZONE	FOR VAR 01,DIMNS 57,23&60°38' WERE 67,33&55°29' RESPLY M/C 6.3 ADDED. WT. WAS 28.6
03	2.1.98				ZONE	DRAWING RETRACED NOTE 1 DELETED.
02	3.12.96				ZONE	M16 WAS 5/8" ATTENTION
01	7.3.85				ZONE	MAT.CODE, MAT SPEC. & PATTERN. NO. ADDED

COMP. FILE NAME 26100408.DWG

REF.DRG.NO.

INVENTORY NO.

TD-150/REV.NO.03 SIZE A2

FIRST ANGLE PROJECTION

(ALL DIMENSIONS ARE IN mm)

DRG.NO. 2-61-376-90004

DJC

THIS THE PROPERTY OF BHARAT HEAVY ELECTRICALS LIMITED.
THE INFORMATION ON THIS DOCUMENT IS THE
IT MUST NOT BE USED DIRECTLY OR INDIRECTLY IN ANY WAY DETRIMENTAL TO THE INTEREST OF THE COMPANY.

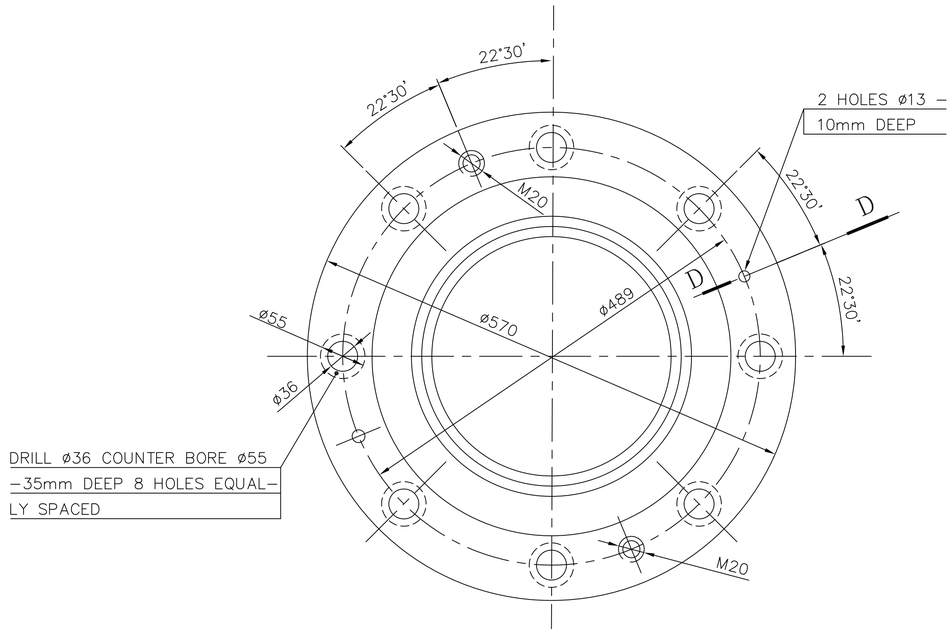

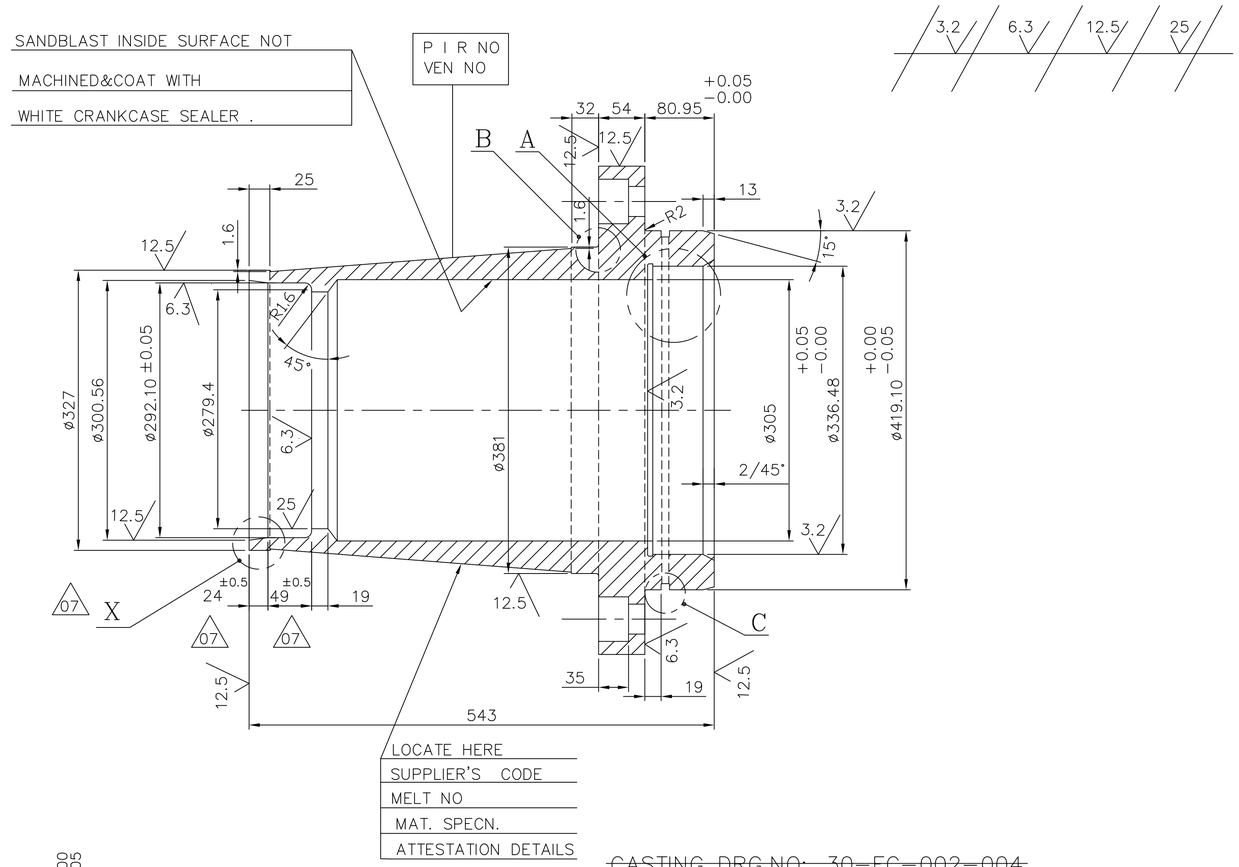

~~CASTING DRG.NO: 30-FC-002-004~~

MATERIAL : CAST IRON

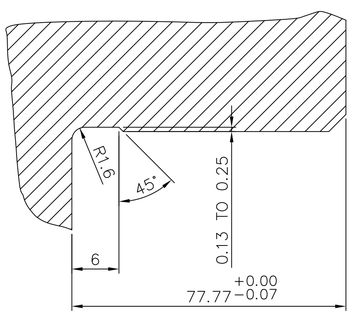

DETAIL–A

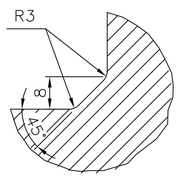

DETAIL–B

1:1

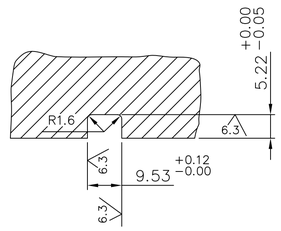

DETAIL–C

1:1

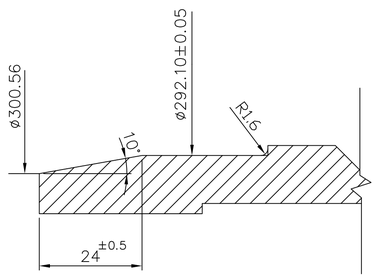

DETAIL–X 07

1:1

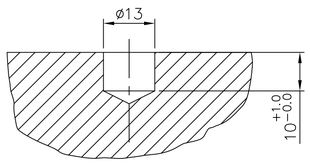

SECTION–DD

1:1

CASTING MUST WITHSTAND HYDRO TEST OF 4KG/CM^2 FOR 30 MINUTES WITH OUT LEAKAGE.

BREAK ALL SHARP EDGES.

ITEM NO	DESCRIPTION	DRAWING NO.	VAR. NO.	RAW MATERIAL SIZE OR CASTING DRG.NO. OR FORGING DRG.NO.	MATERIAL CODE / MATERIAL SPECN.	UNIT WT. / QUANTITY
01	CASTING			PATTERN NO. M-67-072	BA9110321144 / AA19703	195.00 / 1

THE FOLLOWING CONDITIONS APPLY EXCEPT OTHERWISE STATED...

1. REF.TO HY0230261 FOR UNSPECIFIED TOLERANCES.
2. CHAMFER M/CD SHARP EDGES 1.2 TO 1.0 AT 45°.
3. INTERNAL M/CD CORNER RADII 1 TO 0.7.
4. THE SURFACE ROUGHNESS WHEREVER NOT SHOWN SHALL BE TAKEN FROM THE SURFACE ROUGHNESS SHOWN OUT SIDE BACK SLASHES GIVEN AT THE TOP MOST RIGHT CORNER OF THE DRG.

TYPE OF PRODUCT OR NAME OF CUSTOMER/PROJECT: 76" BOWL MILL MATERIAL ATTEST

BHARAT HEAVY ELECTRICALS LTD. HYDERABAD

	NAME	SIGN.	DATE
DRN.	NDS		24.6.98
CHD.	S GHATGE		24.6.98
APPD.	KMR		24.6.98

NO.OF VAR.

DEPT.	BMD	SCALE	WEIGHT(Kg)	REF. TO ASSY DRG.	ITEM NO.	NO.OF ITEMS
CODE	446	1:5 1:1,2:1	195.0	0-61-376-00007/01		

TITLE: UPPER JOURNAL HOUSING

DRAWING NO. 2-61-376-90004 REV. 08

SHEET NO. NO OF SHEETS

REV.	DATE	ALTERED	CHECKED	APPD.
08	26.9.06	C'BORE ø55 WAS ø52.		
07	25/6/98	DWG REDRAWN INCORPORATING PREVIOUS REVISION. ø300.56 WAS ø303.20 CHAMFER 10° INTRODUCED ON DIA 300.56 DIMNS. 24±0.5 AND 49±0.5 WERE 22 AND 51 RESPECTIVELY. DETAIL – X ADDED.		

COMP. FILE NAME | REF.DRG.NO. | INVENTORY NO.

TD-150/REV.NO.03 SIZE A2

FIRST ANGLE PROJECTION

(ALL DIMENSIONS ARE IN mm)

DRG. NO. 2-61-576-00057 | SH. 01 OF 01

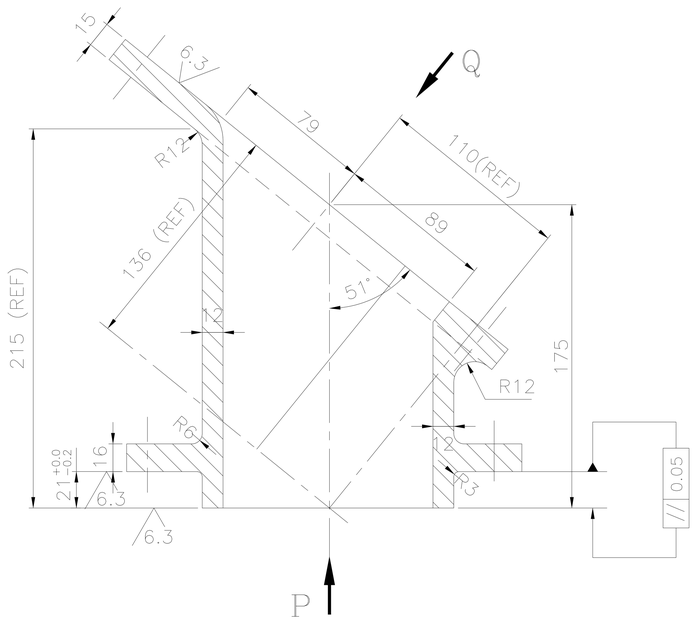

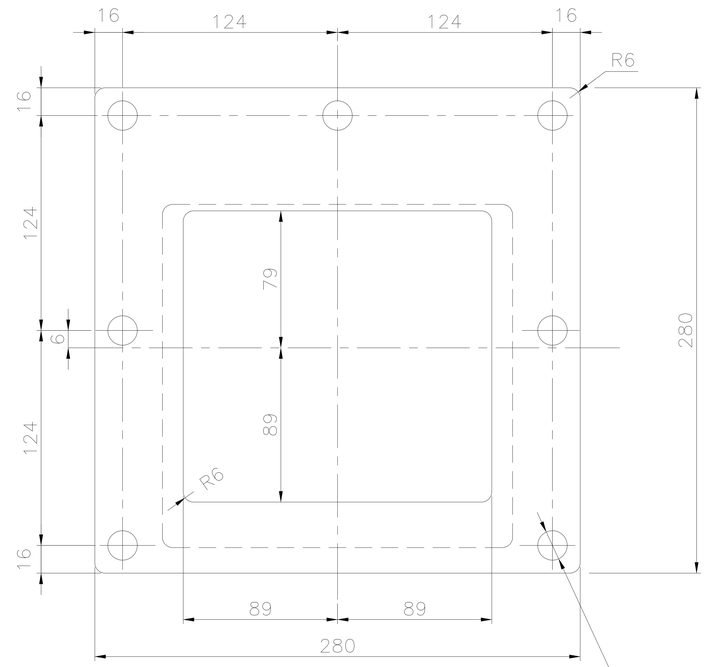

12.5 / 7 HOLES ø17

VIEW–Q

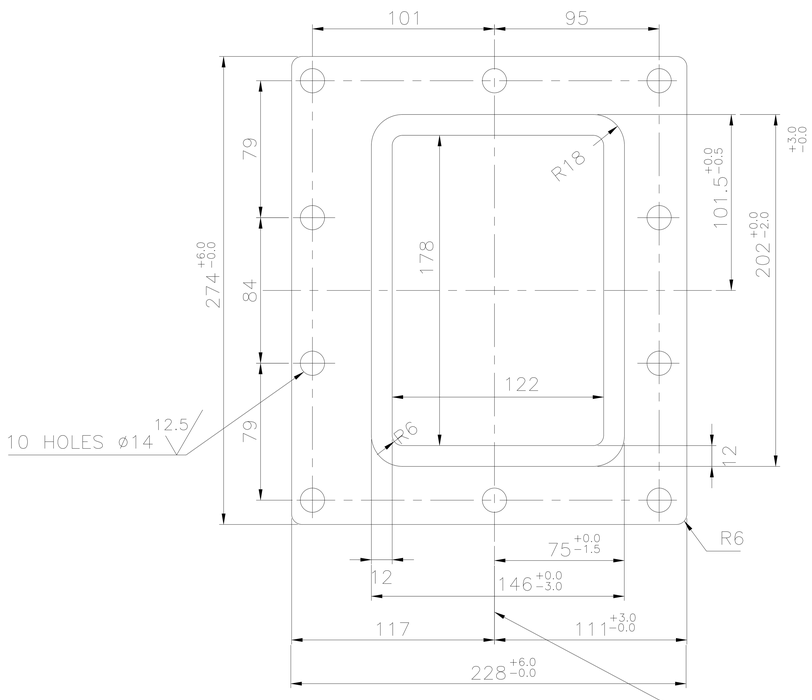

VIEW–P

CASTING & HOLE PATTERN NOT SYMMENTRICAL WITH BORE

12.5 / 6.3

NOTES:–

01. BREAK ALL SHARP EDGES & CORNERS UNLESS OTHERWISE SPECIFIED.

ITEM NO.	DESCRIPTION	DRAWING NO.	VAR. NO.	RAW MATERIAL SIZE OR CASTING DRG. NO. OR FORGING DRG. NO.	MATERIAL CODE	NET WT.	GROSS WT.
	CASTING				BA9110300007	22.00	
					AA19703		
					MATERIAL SPECN.	QUANTITY	

THE FOLLOWING CONDITIONS APPLY EXCEPT OTHERWISE STATED.

1. REF. TO HY0230261 FOR UNSPECIFIED TOLERANCES.
2. CHAMFER M/CD. SHARP EDGES 1.2 TO 1.0 AT 45°.
3. INTERNAL M/CD. CORNER RADII 1 TO 0.7
4. THE SURFACE ROUGHNESS WHERE–EVER NOT SHOWN SHALL BE TAKEN FROM THE SURFACE ROUGHNESS SHOWN OUT SIDE THE BACK SLASH GIVEN OR THE TOP MOST RIGHT CORNER OF THE DRG.

TYPE OF PRODUCT

NAME OF CUSTOMER/PROJECT

BHARAT HEAVY ELECTRICALS LIMITED
HYDERABAD

	NAME	SIGN.	DATE	NO.OF VAR.
DRN.	UNIC		24.1.97	NA
CHD.	B.M.R		99.3.3	
APPD.	B.RAMANNA		99.3.3	

DEPT.	UNTOL. DIMS. GR.		SCALE	WEIGHT (KG)	REF. TO ASSY DRG.	ITEM NO.	NO.OF ITEMS
PUL V ENGG. CODE 446	Ø/M/F		1:4	22.00	20–F–002–059	NA	NA

TITLE: TRAMP IRON SPOUT ADAPTER

CARD CODE: /

DRAWING NO. 2-61-576-00057 REV. 03

SHEET NO. 01 NO OF SHEETS 01

REV.	DATE	ALTERED	APPD.	REV.	DATE	ALTERED	APPD.	REV.	DATE	ALTERED	APPD.
		CHD.				CHD.		03	99.03.03	UC CHD.	
ZONE				ZONE				ZONE			

DRG REPLOTTED. DIMN 6 WAS 10,DIMN'S 130 & 150 DELETED DIMN 89 SHOWN CORRECTLY

THE INFORMATION ON THIS DOCUMENT IS THE PROPERTY OF BHARAT HEAVY ELECTRICALS LIMITED. IT MUST NOT BE USED DIRECTLY OR INDIRECTLY IN ANY WAY DETRIMENTAL TO THE INTEREST OF THE COMPANY

COMPUTER FILE NAME 26100057.DWG

REF. DRG. NO. HY0230261

GENERAL DIMENSIONAL LIMITS,FITS & TOLERANCES AS PER HY0230261

SIGN. AND DATE

INVENTORY NO

FIRST ANGLE PROJECTION

CAUTION: THE INFORMATION ON THIS DOCUMENT IS THE PROPERTY OF BHARAT HEAVY ELECTRICALS LTD. IT MUST NOT BE USED DIRECTLY OR INDIRECTLY IN ANY WAY DETRIMENTAL TO THE INTEREST OF THE COMPANY.

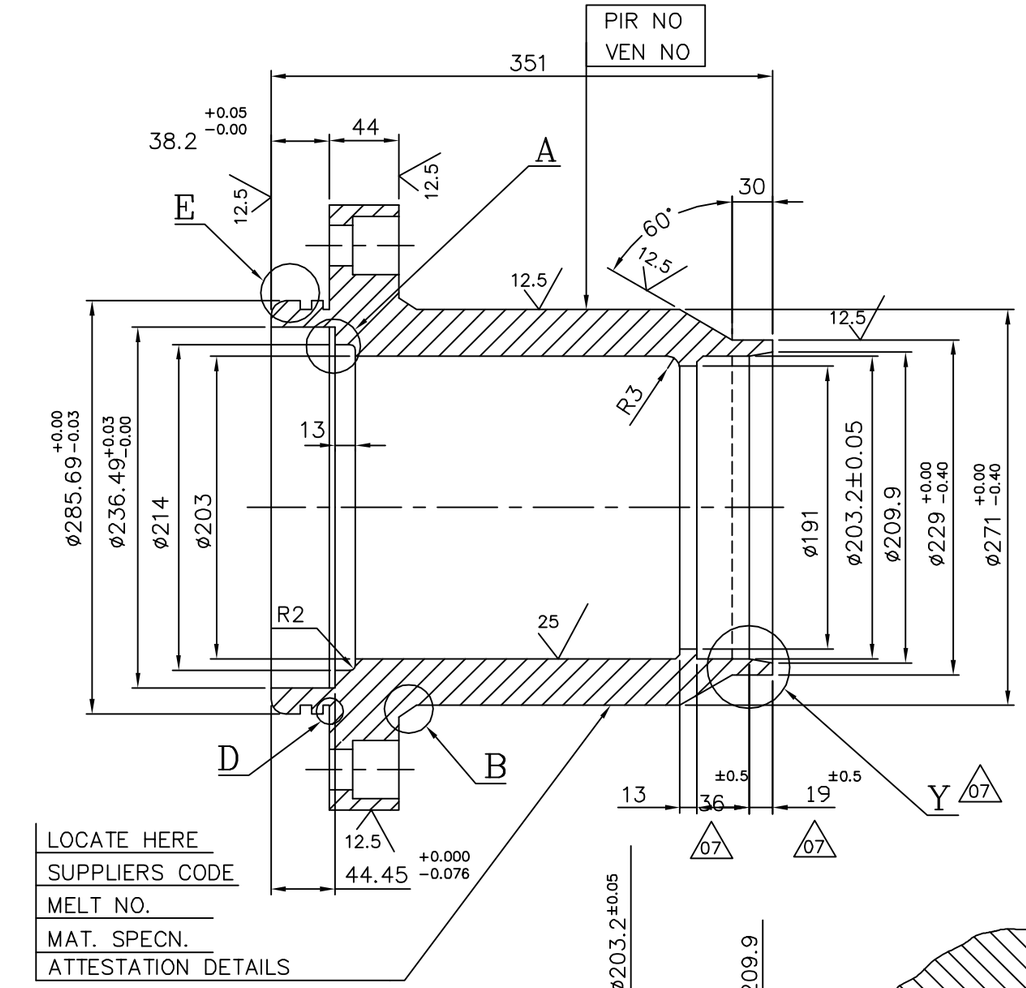

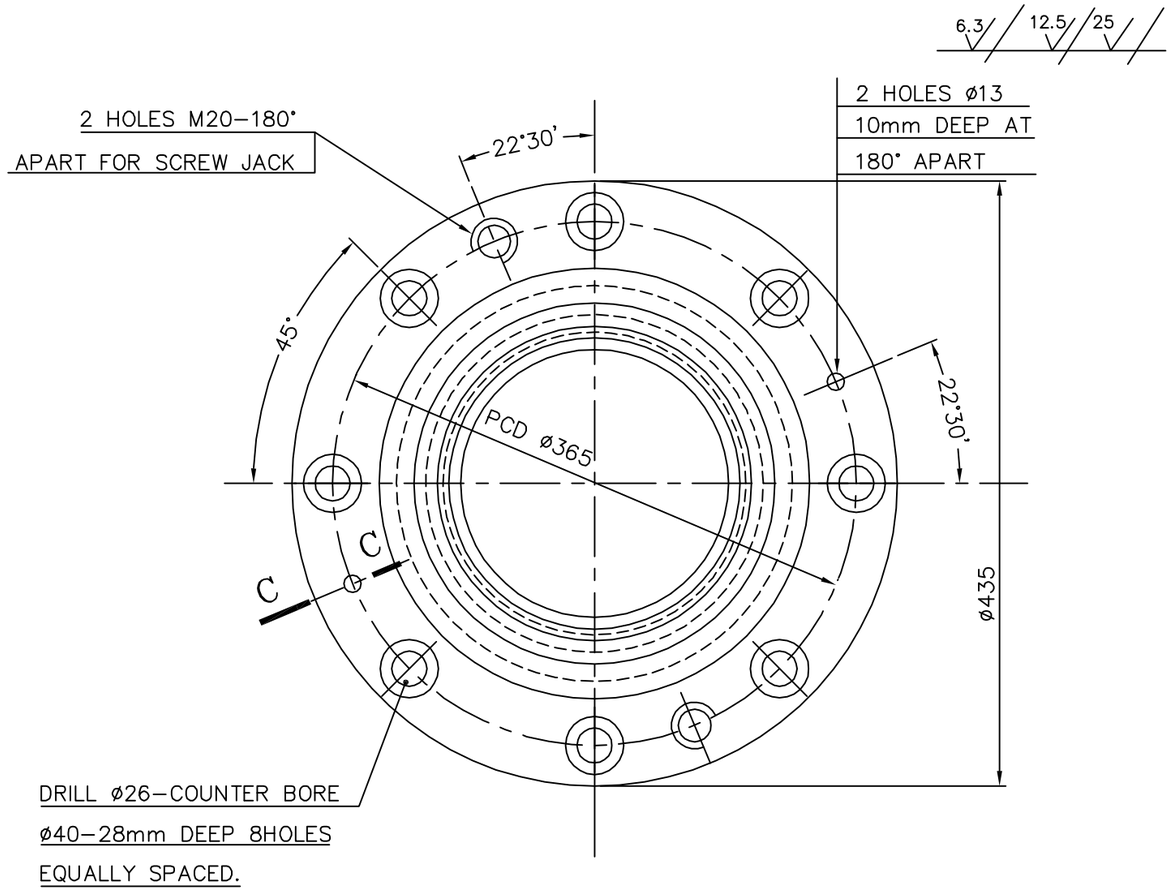

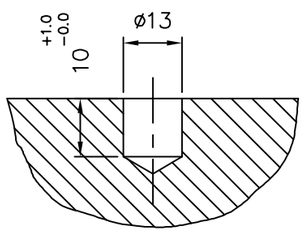

SECTION−CC

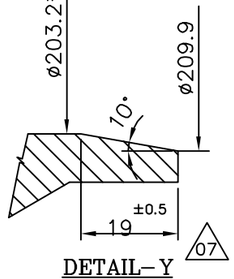

DETAIL−Y

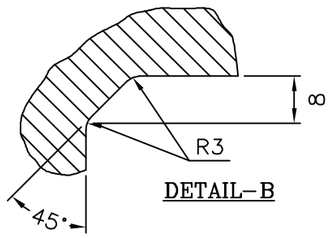

DETAIL−B

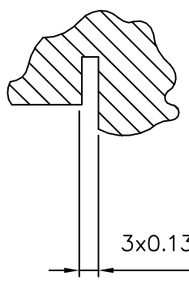

DETAIL−D

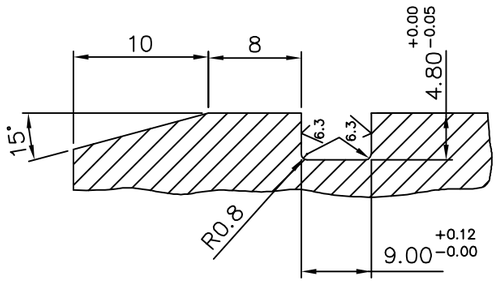

3x0.13 +0.13 −0.00 UNDERCUT

DETAIL−E

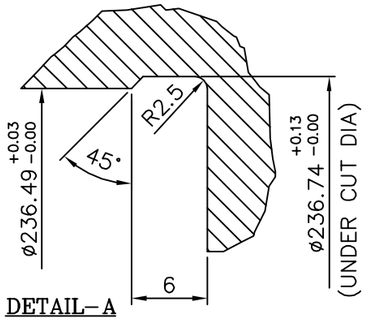

DETAIL−A

~~OLD PATTERN NO: 30F−002−206~~

NEW PATTERN NO: (REF) 3−60−360−00109

CASTING MUST WITHSTAND A HYDROTEST OF 4kg/cm² for ø5MIN WITH OUT LEAKAGE

	BA9110321020			73.0		
	AA19703			1		
IT.NO	MATL CODE	A/C	UNIT	UNIT WT.	GS	ZONE
VAR.	MATL SPECN			QTY.		
→ CARD TYPE−1						

REV		ALTERED
07		CHECKED

DRG. REDRAWN INCOPORATING ALL PREVIOUS REVISIONS. ø209.9 WAS ø206. 10° CHAMFER ADDED ON DIA 203.2. DIMNS 36±0.5 AND 19±0.5 WERE 38 AND 17 RESPECTIVELY DETAIL−Y ADDED.

TYPE OF PRODUCT OR NAME OF CUSTOMER/PROJECT

MATERIAL ATTEST "60" BOWL MILL

Bharat Heavy Electricals Ltd.
HYDERABAD

	NAME	SIGN	DATE
DRN			
CHD.			
APPO.			

DEPT.	GRADE OF UNTOL. DIM		SCALE	WEIGHT(KG)	REF. TO ASSY. DRG.
CODE 446	¢/M/F		1:5	73.0	0−61−362−90008 0−60−360−00011

TITLE: UPPER JOURNAL HOUSING

CARD CODE

DRAWING NO. 3−60−360−00109

REV. 07

SHEET NO. | NO. OF SHEETS

FIRST ANGLE PROJECTION

(ALL DIMENSIONS ARE IN mm)

POORNIMA CAD

DRG. NO. 3-61-000-00523

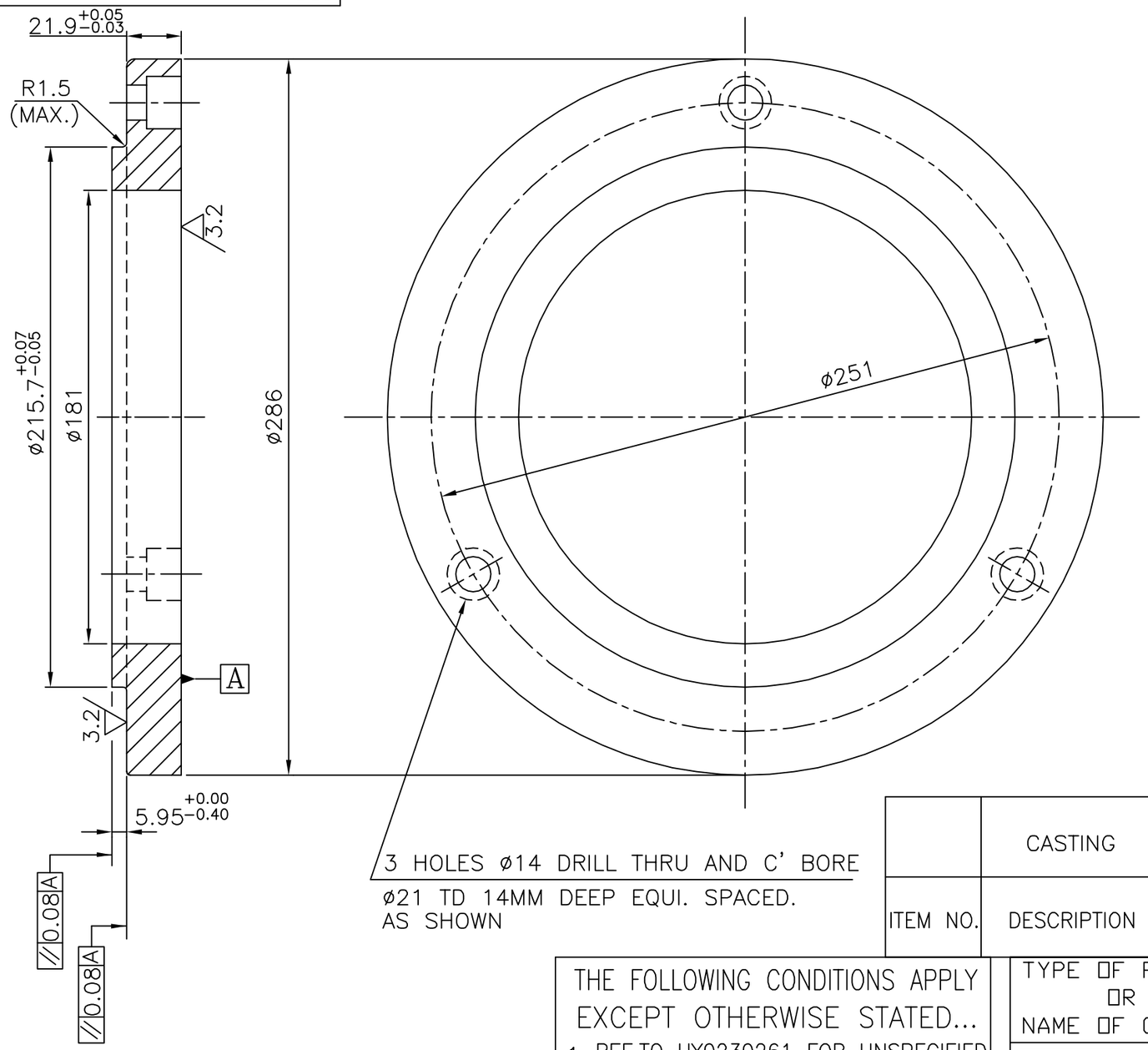

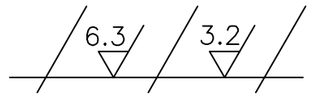

ITEM NO.	DESCRIPTION	STD.	DRAWING NO.	VAR. NO.	MATERIAL CODE / MATERIAL SPECN.	NET WT.	GROSS WT.
	CASTING				BA9110350012 / AA19703	7.000	
					QUANTITY		

THE FOLLOWING CONDITIONS APPLY EXCEPT OTHERWISE STATED...

1. REF.TO HY0230261 FOR UNSPECIFIED TOLERANCES.
2. CHAMFER M/CD SHARP EDGES 1.2 TO 1.0 AT 45°.
3. INTERNAL M/CD CORNER RADII 1 TO 0.7.
4. THE SURFACE ROUGHNESS WHEREVER NOT SHOWN SHALL BE TAKEN FROM THE SURFACE ROUGHNESS SHOWN OUT SIDE BACK SLASHES GIVEN AT THE TOP MOST RIGHT CORNER OF THE DRG.

TYPE OF PRODUCT OR NAME OF CUSTOMER/PROJECT: 1003 XRP BOWL MILL

BHARAT HEAVY ELECTRICALS LTD. HYDERABAD

	NAME	SIGN.	DATE	NO.OF VAR.
DRN.	N.D.S		2.4.99	-NA-
CHD.	S.G		2.4.99	
APPD.	K.M.RAO		2.4.99	

DEPT.	UNTOL. DIMS.		SCALE	WEIGHT (KG)	REF. TO ASSY. DRG.	ITEM NO.	NO.OF ITEMS
PULV ENGG. CODE 446	GR. ¢/M/F		NTS	7.000	B-101-00164-5 1-61-000-01233	05	-NA-

TITLE: TRUNNION BUSHING RETAINER

DRAWING NO. 3-61-000-00523 REV. 01

SHT. No 01 NO. OF SHT. 01

REV.	DATE	ALTERED	REV.	DATE	ALTERED
		CHD/APPD	01	2.4.99	CHD/APPD
ZONE			ZONE	DRAWING REDRAWN.	

INVENTORY NO | SIGN. AND DATE | REF. DRG. NO. | COMPUTER FILE NAME 36100523.DWG

THE INFORMATION ON THIS DOCUMENT IS THE PROPERTY OF BHARAT HEAVY ELECTRICALS LIMITED. IT MUST NOT BE USED DIRECTLY OR INDIRECTLY IN ANY WAY DETRIMENTAL TO THE INTEREST OF THE COMPANY

FIRST ANGLE PROJECTION

(ALL DIMENSIONS ARE IN mm)

DRG.NO. 3-61-004-02324

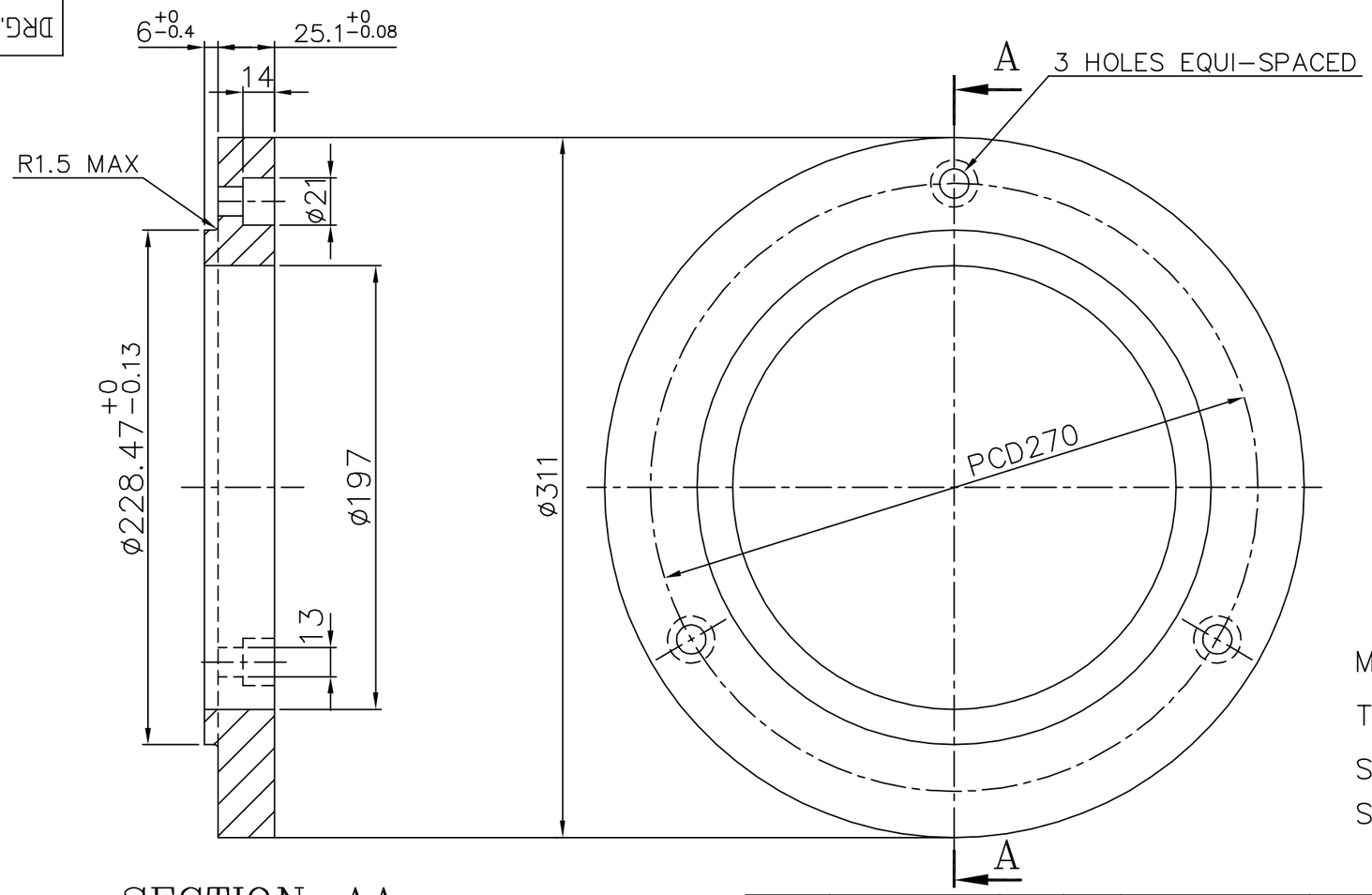

SECTION–AA

6.3

NOTES: –

1. TOLERANCE UNLESS OTHERWISE NOTED:
   CASTING=1.5
   FRACTIONAL=0.4
2. BREAK ALL SHARP EDGES AND CORNERS UNLESS OTHERWISE NOTED:

MACHINE ALL SURFACES TO 6.3 UNLESS. OTHERWISE SHOWN ROUGHNESS RATINGS SHOWN ARE MAXIMUM.

UNIT OF QTY / R.M.UNIT QTY	VAR. No.	DESCRIPTION	ITEM No.	STD	DRAWING NO.	MATERIAL CODE / MATERIAL SPECN.	NET WT. / QUANTITY	GROSS WT.
		CASTING				BA9110350039 / AA19703	9.500 / 1	

THE FOLLOWING CONDITIONS APPLY EXCEPT OTHERWISE STATED...

1. REF.TO HY0230261 FOR UNSPECIFIED TOLERANCES.
2. CHAMFER M/CD SHARP EDGES 1.2 TO 1.0 AT 45°.
3. INTERNAL M/CD CORNER RADII 1 TO 0.7.
4. THE SURFACE ROUGHNESS WHEREVER NOT SHOWN SHALL BE TAKEN FROM THE SURFACE ROUGHNESS SHOWN OUT SIDE BACK SLASHES GIVEN AT THE TOP MOST RIGHT CORNER OF THE DRG.

REV.	DATE	ALTERED / CHECKED	APPD.	REV.	DATE	ALTERED / CHECKED	APPD.
				01	23.5.99		

DRAWING REDRAWN IN AUTOCAD.

TYPE OF PRODUCT OR NAME OF CUSTOMER/PROJECT: 1043 R.P. BOWL MILL CHANDRAPUR–500MW

BHARAT HEAVY ELECTRICALS LTD. HYDERABAD

	NAME	SIGN.	DATE	NO.OF VAR.
DRN.	J.C.S		22.05.99	–
CHD.	E M A		22.05.99	
APPD.	K.M.RAO		22.05.99	

DEPT.	BMD	SCALE	WEIGHT (KG)	REF. TO ASSY DRG.	ITEM NO.	NO.OF ITEMS
CODE	446	1:2.5	9.500	0–61–004–00571	09	32

TITLE: TRUNNION BUSH RETAINER

DRAWING NO. 3–61–004–02324 REV. 01

SHEET NO. 01 NO OF SHEETS 01

TD–151/REV. 03 SIZE A3

THE INFORMATION ON THIS DOCUMENT IS THE PROPERTY OF BHARAT HEAVY ELECTRICALS LTD. IT MUST NOT BE USED DIRECTLY OR INDIRECTLY IN ANY WAY DETRIMENTAL TO THE INTEREST OF THE COMPANY.

COMP. FILE NAME 36102324.DWG

REF.DRG.NO. IB–110–00316/01

INVENTORY NO.

FIRST ANGLE PROJECTION

(ALL DIMENSIONS ARE IN mm)

DRG. NO. 3-61-176-00005

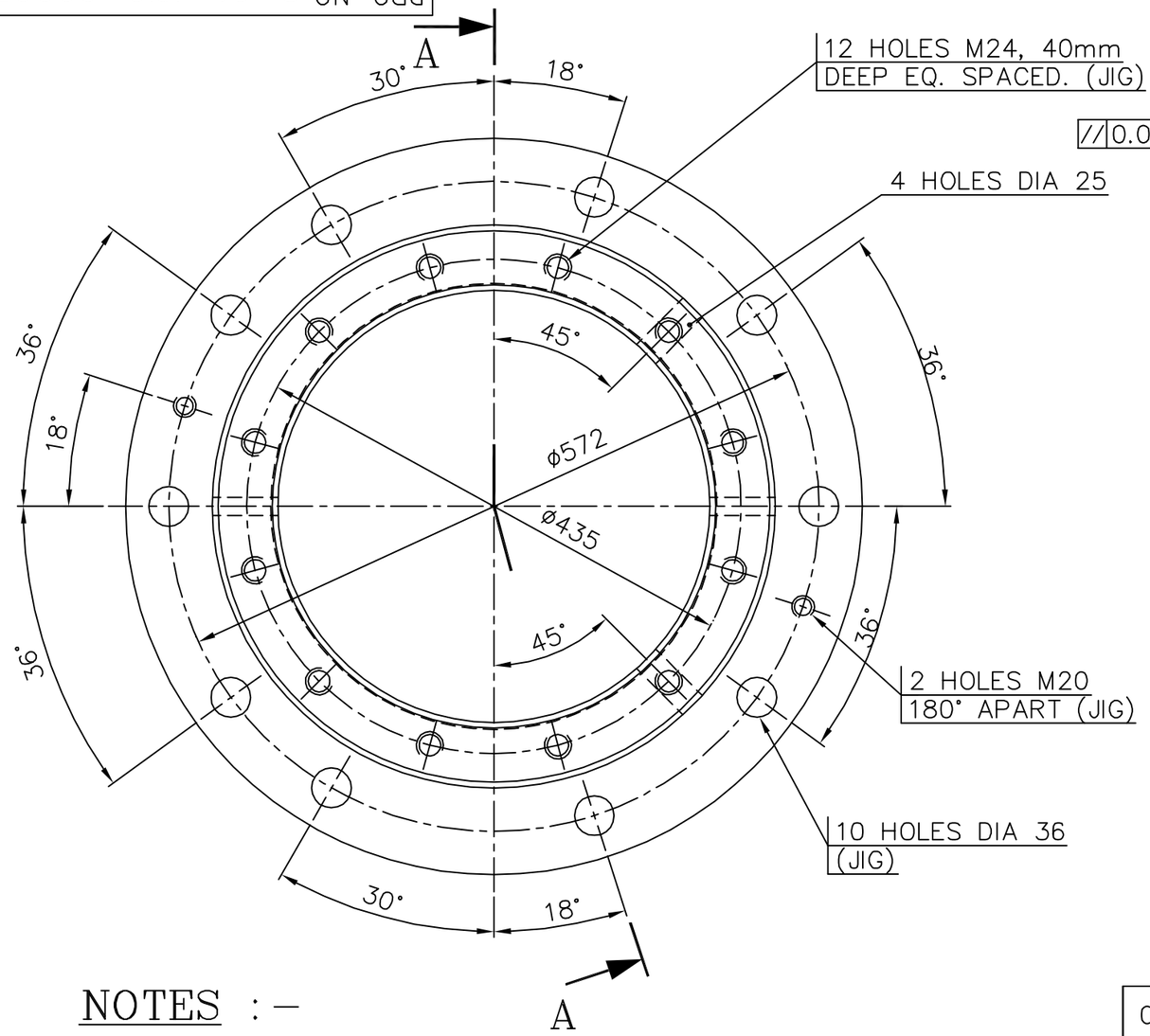

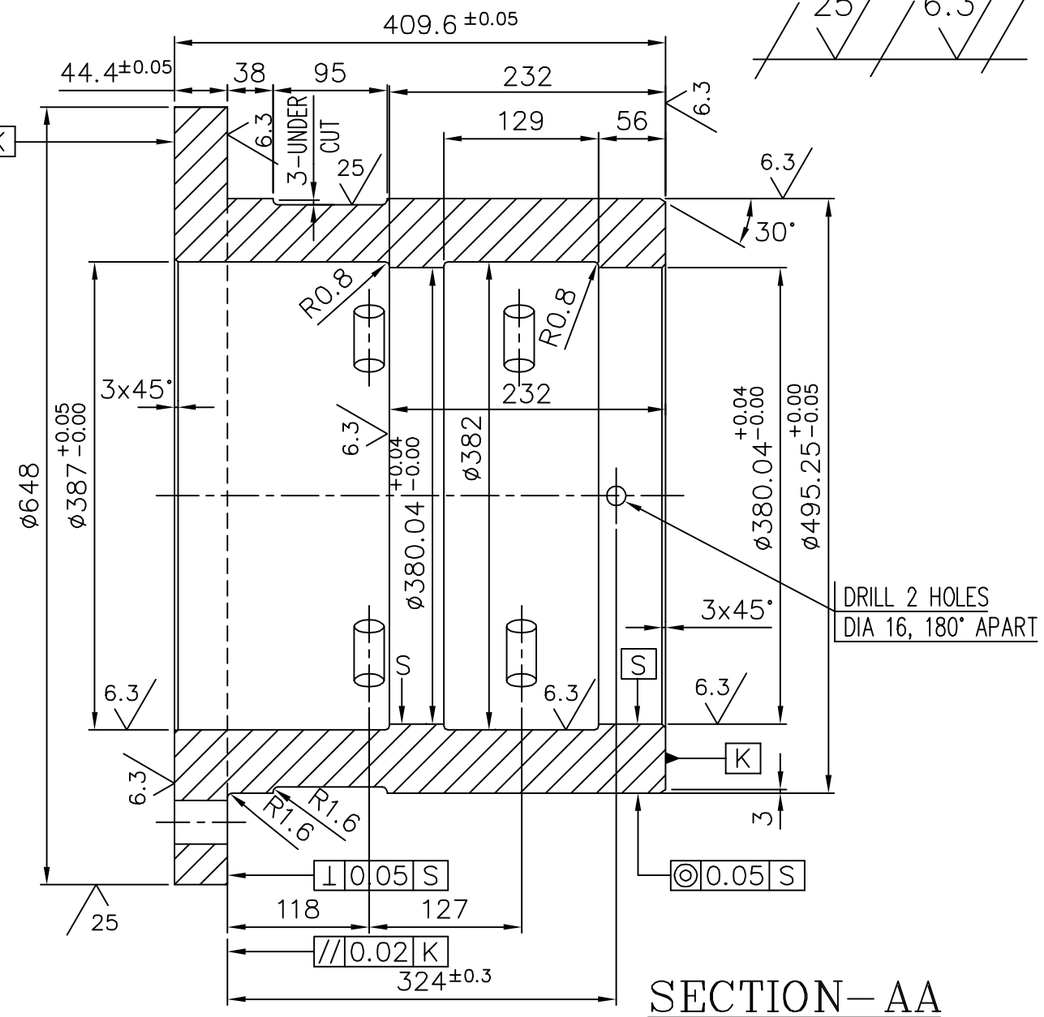

SECTION–AA

NOTES :–

01. REMOVE ALL SHARP EDGES.
02. BEFORE UNLOADING THE JOB FROM THE MACHINE, PARALLELITY OF THE SURFACES SHOULD BE CHECKED.

ITEM NO	DESCRIPTION	DRAWING NO	MATERIAL CODE / MATERIAL SPEC.	UNIT WT. / QTY.
01	THRUST BRG. HSG. CASTING		BA9110321101 / AA19703	303.00 / 1

TYPE OF PRODUCT OR NAME OF CUSTOMER/PROJECT: 763 THRU 1003 XRP BOWL MILLS

BHARAT HEAVY ELECTRICALS LIMITED. HYDERABAD

	NAME	SIGN.	DATE	NO.OF VAR.
DRN.	E.M.ASHOK		12-07-03	01
CHD.	AMAN		12-07-03	
APPD.	S.G		12-07-03	

REV.	DATE	ALTERED	CHECKED	APPD	REV.	DATE	ALTERED	CHECKED	APPD	REV.	DATE	ALTERED	CHECKED	APPD
										08	12-07-03	E.M.ASHOK		
ZONE					ZONE					ZONE	DRAWING REDRAWN INCORPORATING ALL PREVIOUS REVISIONS.			

DEPT. PULV.ENGG	GRADE OF TOL.DIM.		SCALE	WEIGHT (KG)	REF. TO ASSY DRG.	ITEM NO.	NO.OF ITEMS
CODE 446	¢/M/f		1:5	303.00	------	--	--

TITLE: THRUST BRG. HOUSING

CARD CODE: N.A.

DRAWING NO. 3-61-176-00005 REV. 08

SHEET NO. 01 NO OF SHEETS 01

THE INFORMATION ON THIS DOCUMENT IS THE PROPERTY OF BHARAT HEAVY ELECTRICALS LIMITED. IT MUST NOT BE USED DIRECTLY OR INDIRECTLY IN ANY WAY DETRIMENTAL TO THE INTREST OF THE COMPANY

REF. DRG. NO. 30-F-002-127

SIGN. AND DATE

INVENTORY NO

361005.DWG/1135

FIRST ANGLE PROJECTION

(ALL DIMENSIONS ARE IN mm)

DRG NO 3-61-176-00006

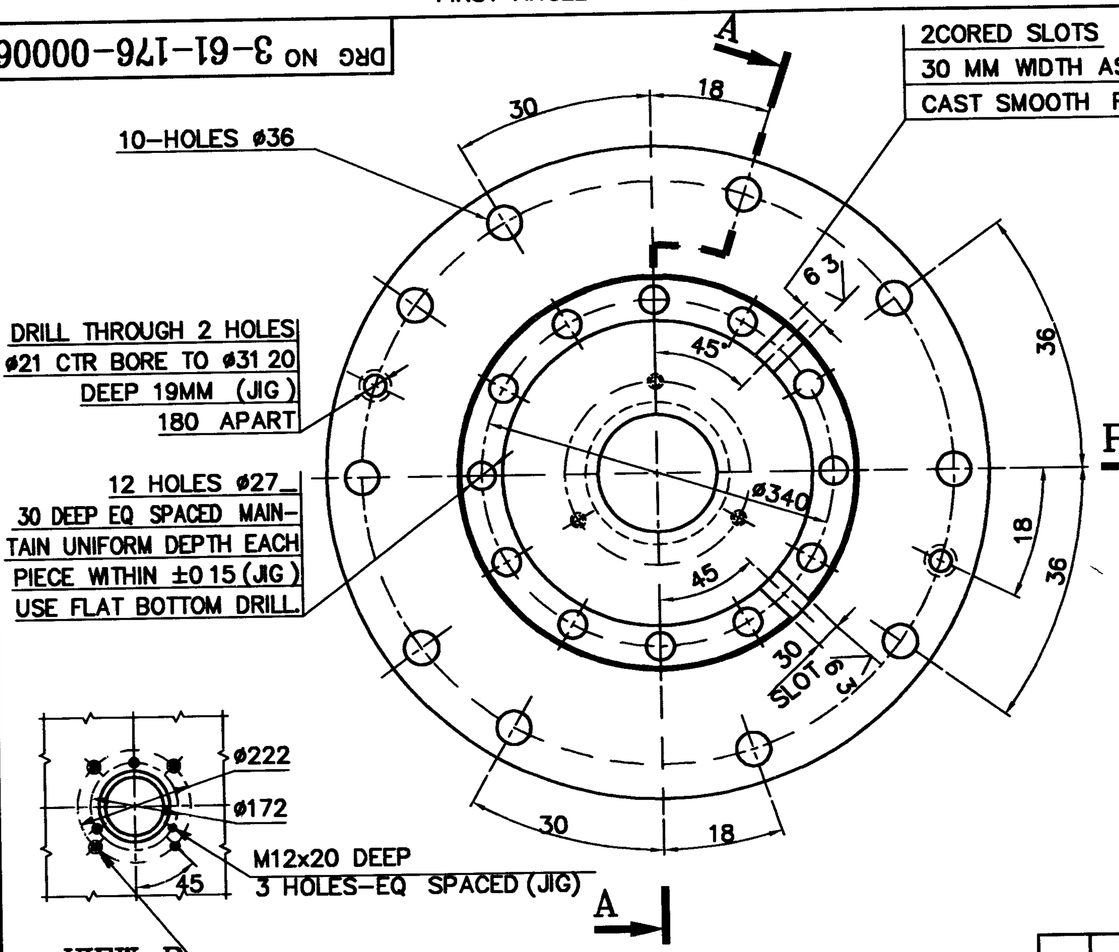

VIEW-P

SCALE-1.10

TAP DRILL MUST NOT BREAK THROUGH
4 HOLES M12x25 DEEP EQ SPACED (JIG)

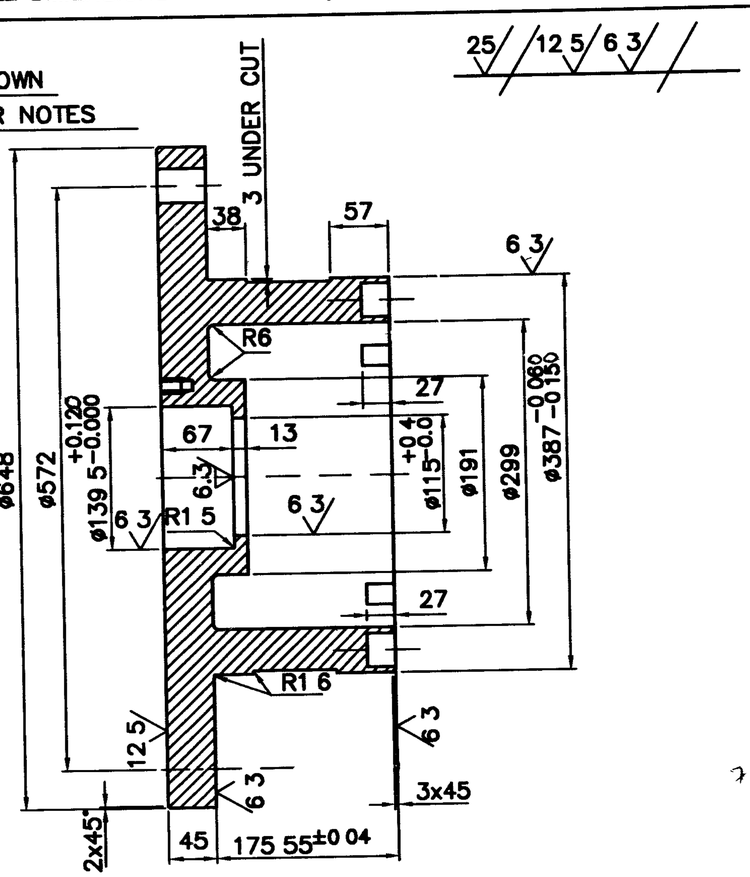

SECTION -AA

NOTES.

1 BREAK ALL SHARP EDGES
2 SHOT BLAST ALL SURFACES AT FOUNDRY INSIDE SURFACES MUST BE 100% FREE FROM SCALE & SAND ALL INSIDE UNMACHINED SURFACES MUST BE COATED WITH ARMSTRONG WHITE CRANK CASE SEALER (SYNTHETIC CASTING SEALER)
3 BEFORE UNLOADING THE JOB FROM THE MACHINE PARALLELITY OF THE SURFACES MUST BE CHECKED

ITEM NO	DESCRIPTION	DRAWING NO	MATERIAL CODE / MATERIAL SPEC.	UNIT WT / QTY.
01	CASTING		BA9110307010 / AA19703	181 00 / 1

TYPE OF PRODUCT OR NAME OF CUSTOMER/PROJECT: 763 783 803 963 983 1003

BHARAT HEAVY ELECTRICALS LIMITED. HYDERABAD

	NAME	SIGN	DATE	NO OF VAR
DRN	ACS/PAVAN	Pavan	06 12 96	01
CH	P V RAO	P V Rao	06 12 96	
APPD	G KISTAIAH		06 12 96	

REV	DATE	ALTERED	CHECKE	APP	REV	ATE	ALTERE	C ECKED	APPD	REV	ATE	ALTERED	C ECKED	APPD
										07	6 12 96	Pavan	P V Rao	
ZONE					ZONE					ZONE				

DRAWING REDRAWN INCORPORATING ALL PREVIOUS REVISIONS

DEPT	GRADE OF TOL.DIM.	SCALE	WEIGHT (KG)	REF TO ASSY DRG.	TEM NO	NO OF ITEMS
PULV.ENGG CODE 446	#/M#	1 5	181 00	--------	--	--

TITLE: THRUST BRG HSG CAP

CARD CODE: --

DRAWING NO 3-61-176-00006 REV 07

SHEET NO 01 NO OF SHEETS 01

BHARAT HEAVY ELECTRICALS LIMITED

THIS DOCUMENT AND INFORMATION ON THIS DOCUMENT IS THE PROPERTY OF BHARAT HEAVY ELECTRICALS LIMITED. IT MUST NOT BE USED DIRECTLY OR INDIRECTLY IN ANY WAY DETRIMENTAL TO THE INTREST OF THE COMPANY

SIGN AND DATE | REF DRG NO | INVENTORY NO

361006 DWG/1069

A3 A4

FIRST ANGLE PROJECTION

(ALL DIMENSIONS ARE IN mm)

DRG.NO. 3-61-176-00012

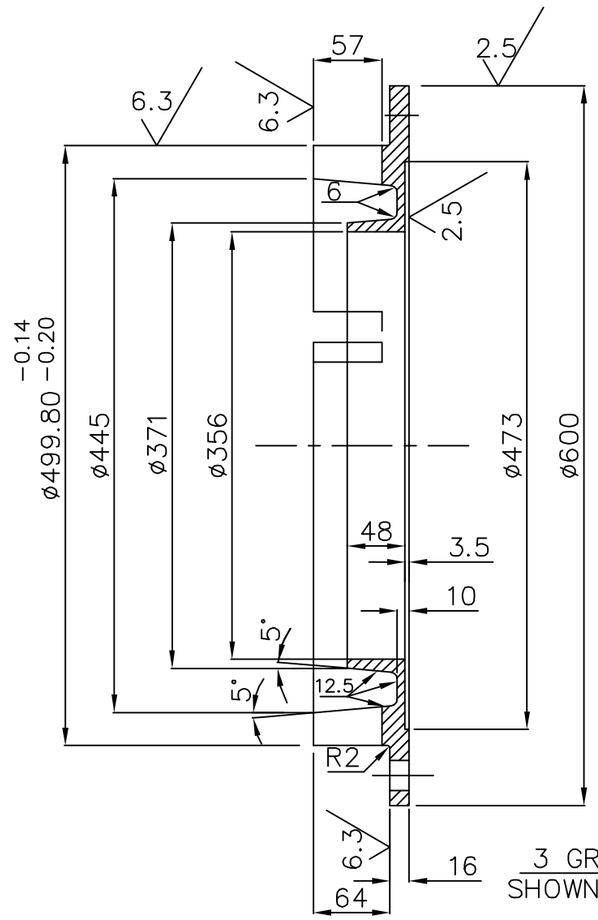

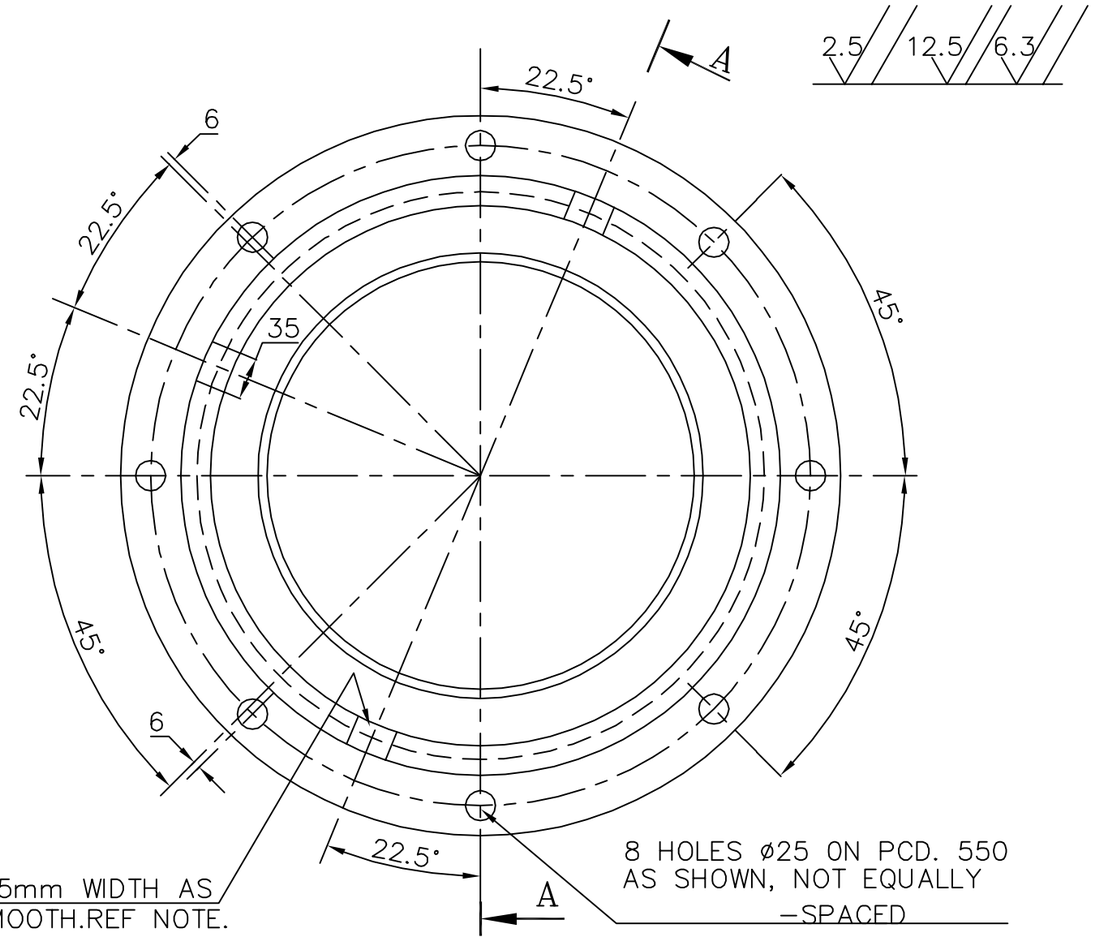

ITEM NO	DESCRIPTION	DRAWING NO.	VAR. NO.	RAW MATERIAL SIZE OR CASTING DRG.NO. OR FORGING DRG.NO.	MATERIAL CODE / MATERIAL SPECN.	NET WT.	GROSS WT. / QUANTITY
01	CASTING	PATTERN NO.M-67-052			BA9110306765 / AA19703	36.00	1

THE FOLLOWING CONDITIONS APPLY EXCEPT OTHERWISE STATED...

1. REF.TO HY0230261 FOR UNSPECIFIED TOLERANCES.
2. CHAMFER M/CD SHARP EDGES 1.2 TO 1.0 AT 45°.
3. INTERNAL M/CD CORNER RADII 1 TO 0.7.
4. THE SURFACE ROUGHNESS WHEREVER NOT SHOWN SHALL BE TAKEN FROM THE SURFACE ROUGHNESS SHOWN OUT SIDE BACK SLASHES GIVEN AT THE TOP MOST RIGHT CORNER OF THE DRG.

TYPE OF PRODUCT OR NAME OF CUSTOMER/PROJECT: 763 XRP BOWL MILL

BHARAT HEAVY ELECTRICALS LTD. HYDERABAD

	NAME	SIGN.	DATE	NO.OF VAR.
DRN.	RAZVI		19.2.04	
CHD.	G.S.N.M.RAO		19.2.04	
APPD.	KMR		19.2.04	

DEPT. PULV ENGG. / CODE 446	SCALE	WEIGHT (KG)	REF. TO ASSY DRG.	ITEM NO.	NO.OF ITEMS
	1:5	36.00	06118000144	125	-

TITLE: OIL COLLECTOR

DRAWING NO. 3-61-176-00012 REV. 05

SHEET NO. / NO OF SHEETS

REV.	DATE	ALTERED	CHD.	APPD.
05	13.6.06	ALTERED	CHD. AMAN	APPD. SG

ZONE: DRILL JIG DELETED.

INVENTORY NO. / REF.DRG.NO. / FILE NAME: 36100012.dwg

THE INFORMATION ON THIS DOCUMENT IS THE PROPERTY OF BHARAT HEAVY ELECTRICALS LTD. IT MUST NOT BE USED DIRECTLY OR INDIRECTLY IN ANY WAY DETRIMENTAL TO THE INTEREST OF THE COMPANY.

TD-151/REV. 03 SIZE A3

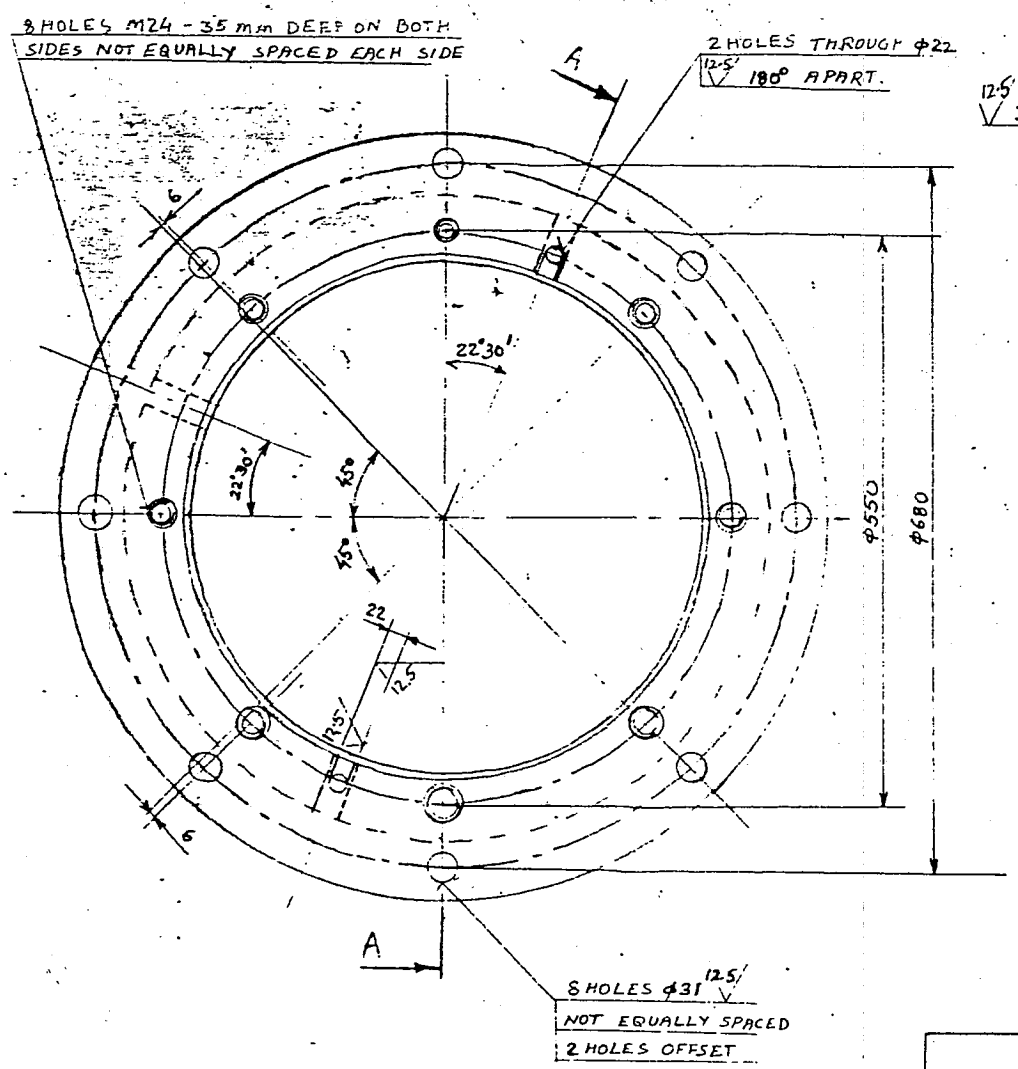

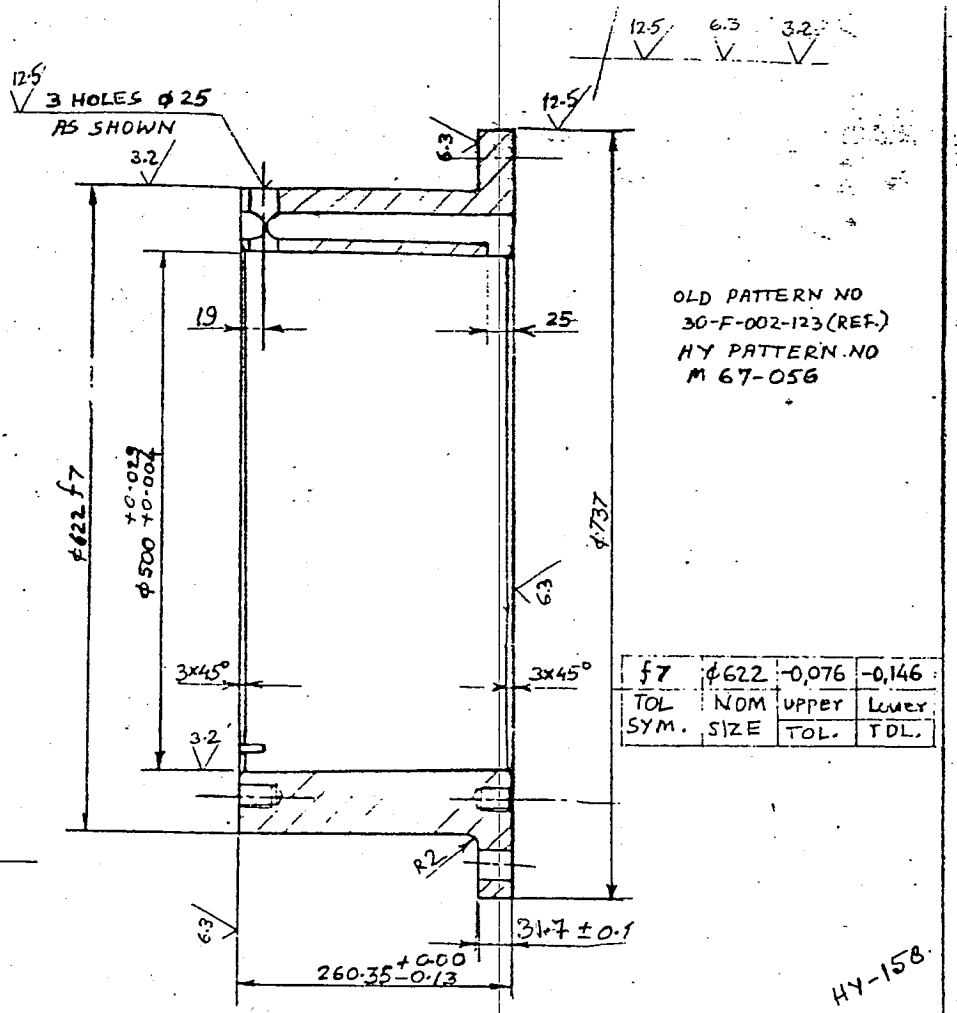

OLD PATTERN NO
30-F-002-123 (REF.)
HY PATTERN NO
M 67-056

f7	ϕ622	-0.076	-0.146
TOL SYM.	NOM SIZE	UPPER TOL.	LOWER TOL.

HY-158

BREAK ALL SHARP EDGES
REFER CASTING DRG. NO. 90-F-002-245

JS 210 Gr 25	BA9/1032/128	249	40	UPPER BEARING HOUSING
	AA19703			
	MATL CODE	UNIT WT. (KG.)		DESCRIPTION
	MATL. SPEC.	NO OFF		

BHARAT HEAVY ELECTRICALS LTD.
HEAVY EQUIPMENT REPAIR PLANT
SHIVPUR VARANASI

DRN	
CHD	S.C. Rai
APPD.	S.C. Rai
DATE	12.07.94

REV	DATE		REV.	DATE		REV	DATE	
03	29.3.80		02	19.10.79		01	19.10.79	
MATL. SPECN WAS C.I. A48-CL30. M.C. WAS 92/005/325			GROOVE DIMENSION 22 CORRECTED			2 X 45° CHAMFER ADDED		

BHEL | UPPER BRG. HOUSING | 3-61-176-00023/03 A

Master Copy

FIRST ANGLE PROJECTION

(ALL DIMENSIONS ARE IN mm)

DRG.NO. 3-61-276-00042

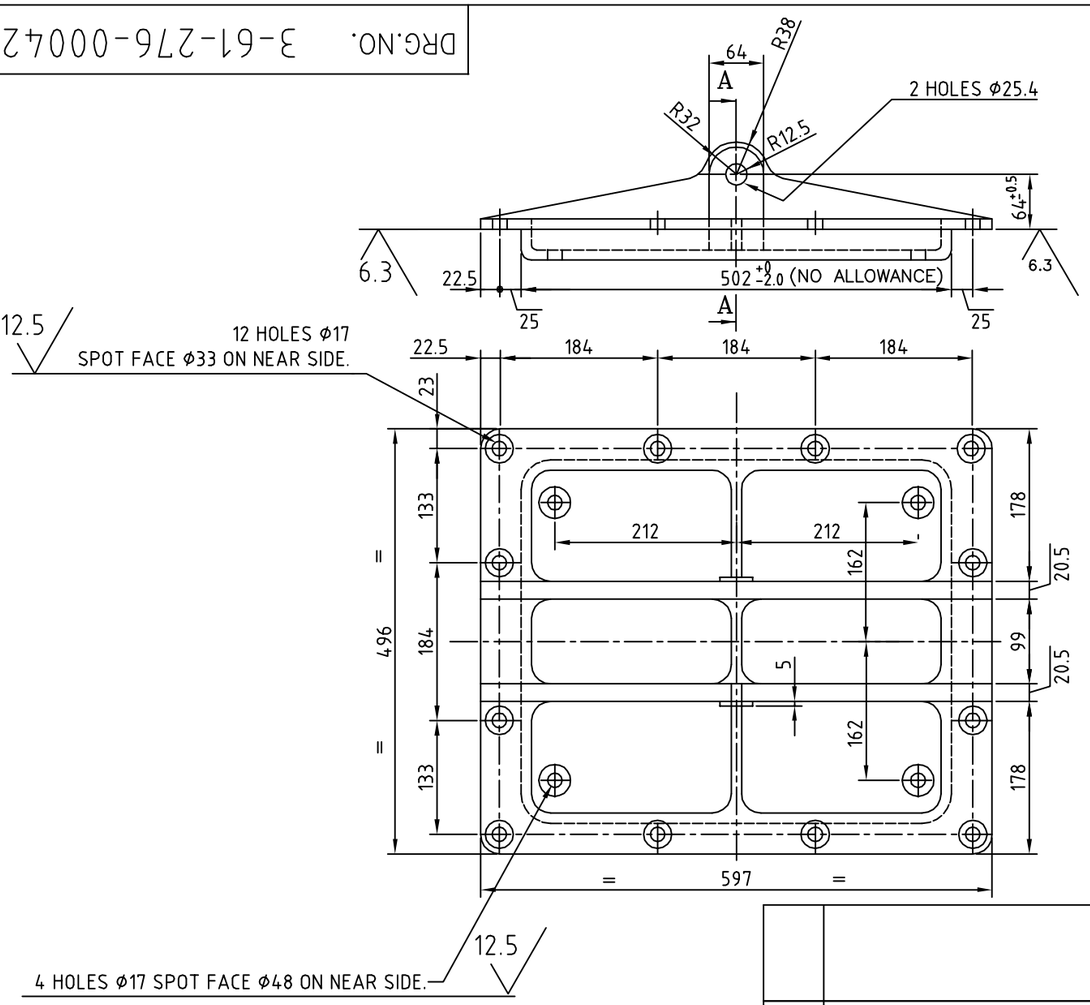

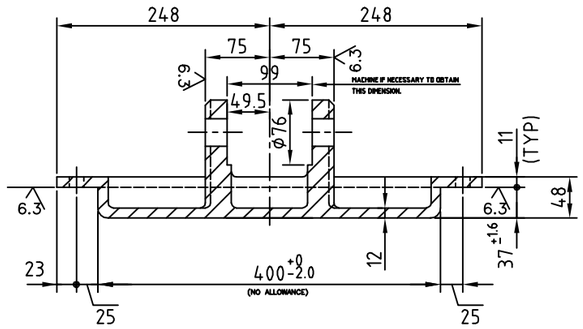

SECTION–AA

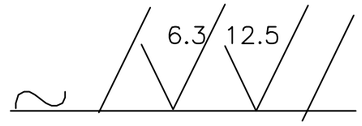

NOTE:

1. PATTERN No.M–67–063
2. THIS IS A FINISH MACHINED DRAWING. CASTING SHALL BE SUPPLIED IN ROUGH MACHINED CONDITION WITH 5mm ALLOWANCE ON ALL MACHINDED SURFACES.
3. BREAK ALL SHARP EDGES.

ITEM NO	DESCRIPTION	DRAWING NO.	VAR. NO.	RAW MATERIAL SIZE OR CASTING DRG.NO. OR FORGING DRG.NO.	MATERIAL CODE / MATERIAL SPECN.	NET WT.	GROSS WT.
01	CASTING				BA9110209000 / AA19702	29.50 / 1	

THE FOLLOWING CONDITIONS APPLY EXCEPT OTHERWISE STATED...

1. REF.TO HY0230261 FOR UNSPECIFIED TOLERANCES.
2. CHAMFER M/CD SHARP EDGES 1.2 TO 1.0 AT 45°.
3. INTERNAL M/CD CORNER RADII 1 TO 0.7.
4. THE SURFACE ROUGHNESS WHEREVER NOT SHOWN SHALL BE TAKEN FROM THE SURFACE ROUGHNESS SHOWN OUT SIDE BACK SLASHES GIVEN AT THE TOP MOST RIGHT CORNER OF THE DRG.

TYPE OF PRODUCT OR NAME OF CUSTOMER/PROJECT: 763,783,803,883,963,983&1003 BOWL MILLS

BHARAT HEAVY ELECTRICALS LTD. HYDERABAD

	NAME	SIGN.	DATE	NO.OF VAR.
DRN.	E.M.ASHOK		03-09-03	
CHD.	AMAN/NDS		03-09-03	
APPD.	S GHATGE		05-01-04	

DEPT.	PULVE.ENGG	SCALE	WEIGHT (KG)	REF. TO ASSY DRG.	ITEM NO.	NO.OF ITEMS
CODE	446	1:2	29.5	2.61.288.02089	01	18

TITLE: MILL SIDE INSPECTION DOOR

DRAWING NO. 3-61-276-00042 REV. 06

SHEET NO. 01 NO OF SHEETS 01

REV.	DATE	ALTERED	CHD.	APPD.
06	3.9.03	ALTERED E.M.ASHOK	CHD.	APPD.

ZONE: DRG REDRAWN ON AUTOCAD INCORPORATING ALL PREVIOUS REVISIONS.

THE INFORMATION ON THIS DOCUMENT IS THE PROPERTY OF BHARAT HEAVY ELECTRICALS LTD. IT MUST NOT BE USED DIRECTLY OR INDIRECTLY IN ANY WAY DETRIMENTAL TO THE INTEREST OF THE COMPANY.

FILE NAME: 36100042

REF.DRG.NO.

INVENTORY NO.

TD–151/REV. 03 SIZE A3

FIRST ANGLE PROJECTION

(ALL DIMENSIONS ARE IN mm)

DRG. NO. 3-61-276-00046

SHEET NO. 1 OF 1

WELD SYMBOL	TYPE OF ELECTRODE	LENGTH OF WELD
3 ◺	E44 RNX	0.08M

WPS: WE006

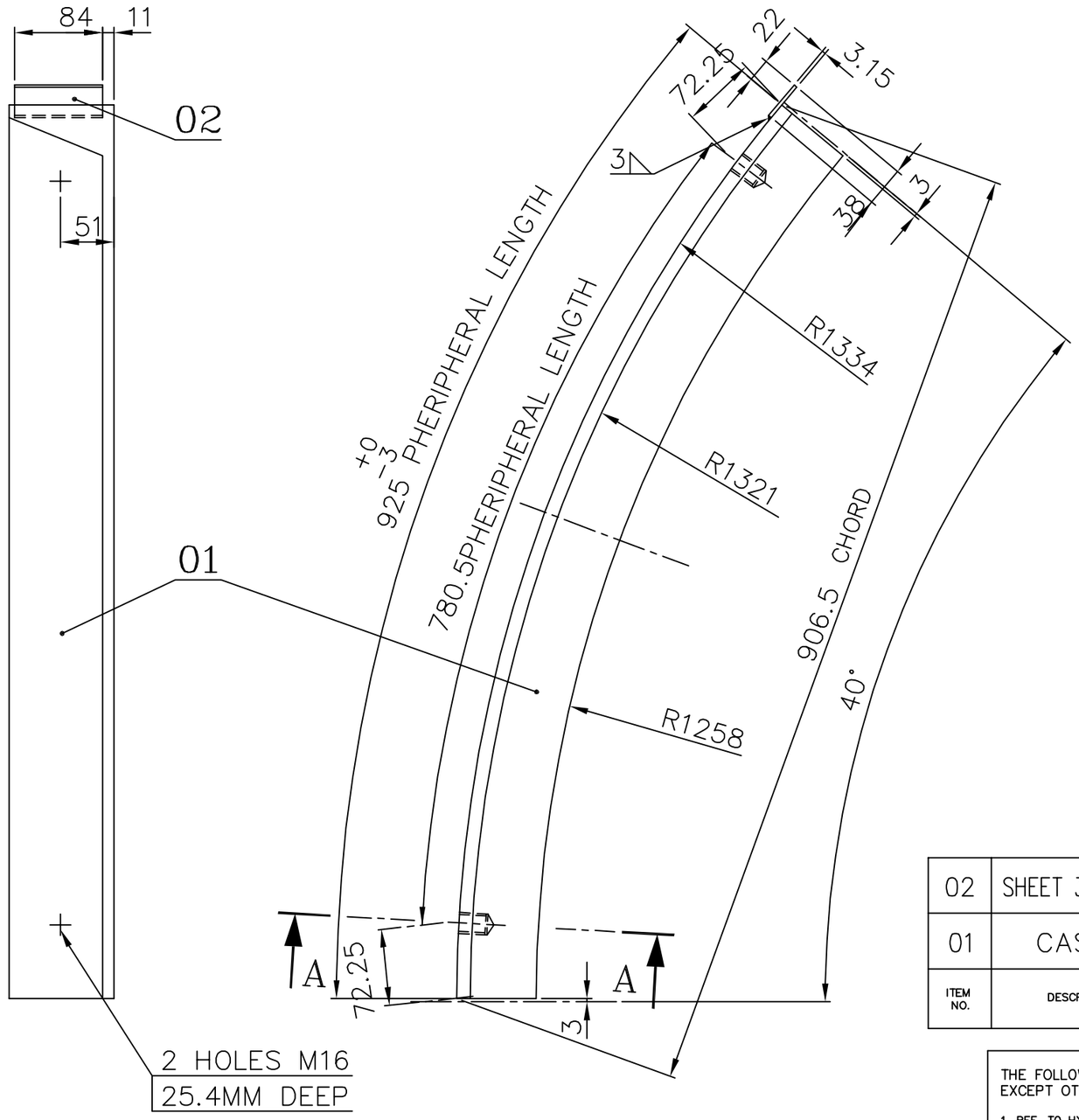

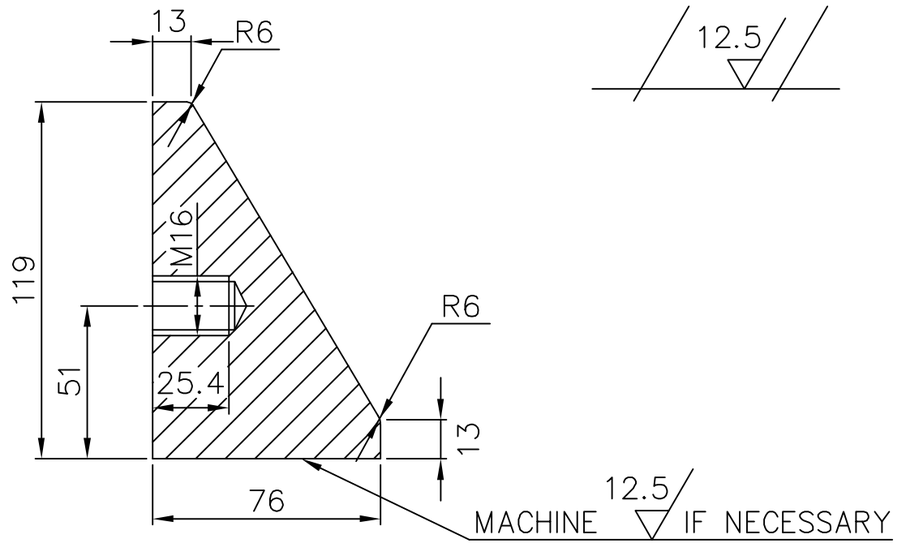

SECTION–AA

12.5

ITEM NO.	DESCRIPTION	DRAWING NO.	VAR. NO.	RAW MATERIAL SIZE OR CASTING DRG. NO. OR FORGING DRG. NO.	MATERIAL CODE / MATERIAL SPECN.	NET WT. / QUANTITY	GROSS WT.
02	SHEET 3.15x38x84				AA1011711133	0.08	
					AA10111	1	
01	CASTING				BA9110233024	42.30	
					AA19702	1	

THE FOLLOWING CONDITIONS APPLY EXCEPT OTHERWISE STATED.

1. REF. TO HY0230261 FOR UNSPECIFIED TOLERANCES.
2. CHAMFER M/CD. SHARP EDGES 1.2 TO 1.0 AT 45°.
3. INTERNAL M/CD. CORNER RADII 1 TO 0.7
4. THE SURFACE ROUGHNESS WHERE-EVER NOT SHOWN SHALL BE TAKEN FROM THE SURFACE ROUGHNESS SHOWN OUT SIDE THE BACK SLASH GIVEN OR THE TOP MOST RIGHT CORNER OF THE DRG.

TYPE OF PRODUCT

NAME OF CUSTOMER/PROJECT

BHARAT HEAVY ELECTRICALS LIMITED
HYDERABAD

	NAME	SIGN.	DATE	NO.OF VAR.
DRN.	ACS		12.12.01	N.A.
CHD.	S.GHATGE		12.12.01	
APPD.	K.M.RAO		12.12.01	

DEPT. PULV.ENGG. CODE 446	UNTOL. DIMS. GR. ¢/M/¢	SCALE 1:5, 1:2	WEIGHT (KG) 42.38	REF. TO ASSY DRG. N.A.	ITEM NO. N.A.	NO.OF ITEMS N.A.

TITLE MILL SIDE BOTTOM LINER

CARD CODE N.A.

DRAWING NO. 3-61-276-00046 REV. 04

SHEET NO. 1 NO OF SHEETS 1

REV.	DATE	ALTERED	APPD.
		CHD.	
ZONE			

REV.	DATE	ALTERED	APPD.
04	12.12.01	CHD.	
ZONE	TOLERANCE ON 925 WAS ±3 M16 LOCATING DIMS ADDED		

REV.	DATE	ALTERED	APPD.
03	13.5.98	CHD.	
ZONE	DRG. REVISED INCORPORATING ALL PREVIOUS REVISIONS DIMNS. 51, 72.25 & 780.5 DELETED. NOTE DRILL IN ASSY ADDED WPS ADDED.		

THE INFORMATION ON THIS DOCUMENT IS THE PROPERTY OF BHARAT HEAVY ELECTRICALS LIMITED. IT MUST NOT BE USED DIRECTLY OR INDIRECTLY IN ANY WAY DETERIMENTAL TO THE INTEREST OF THE COMPANY

COMPUTER FILE NAME 36100046.DWG/1328

REF. DRG. NO. —

SIGN. AND DATE

INVENTORY NO

FIRST ANGLE PROJECTION

(ALL DIMENSIONS ARE IN mm)

DRG. NO. 3-61-276-00049

SHEET NO. 1 OF 1

WELD SYMBOL	TYPE OF ELECTRODE	LENGTH OF WELD
3 ◺	E44 RNX	0.05M

WPS: WE006

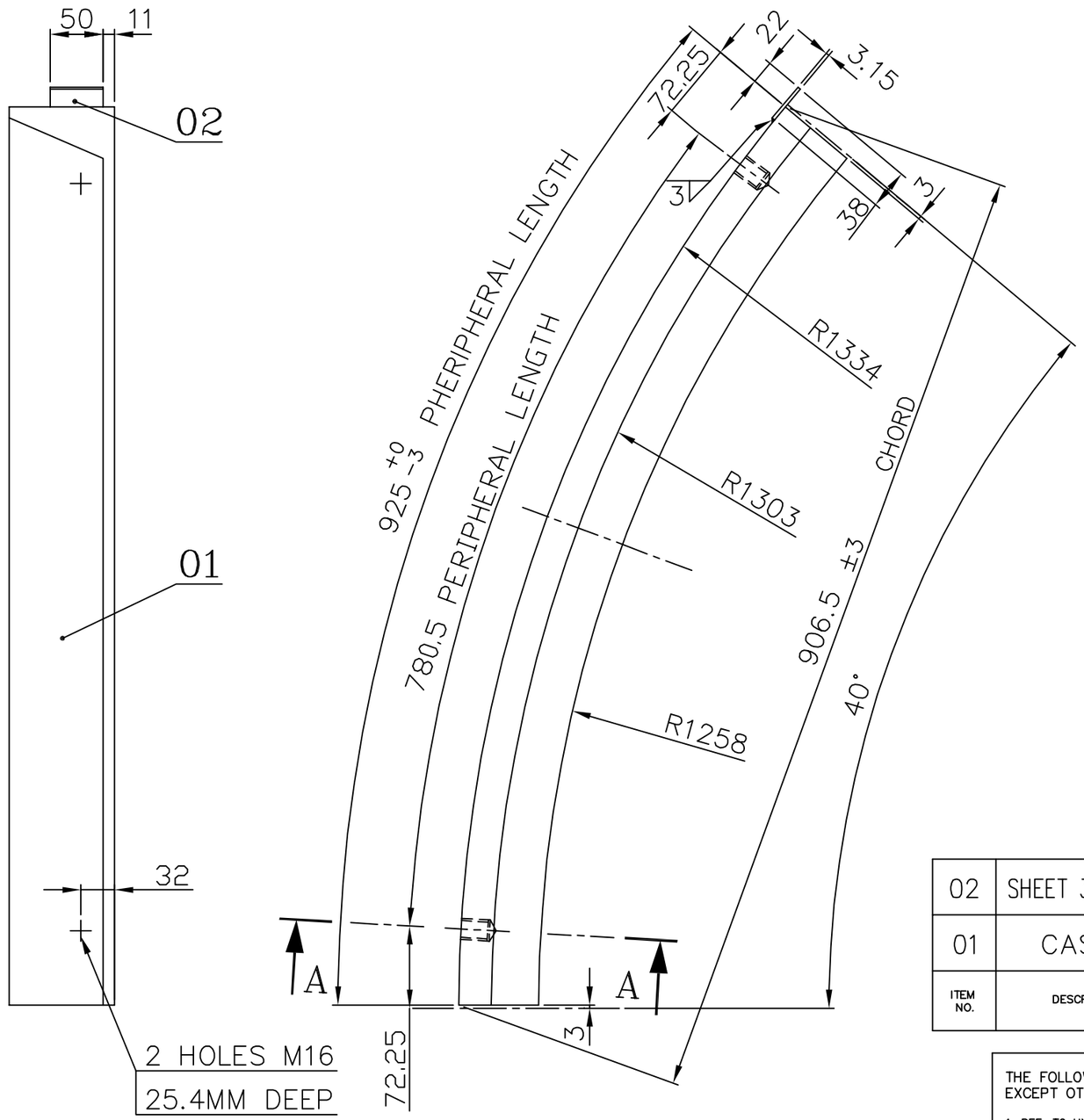

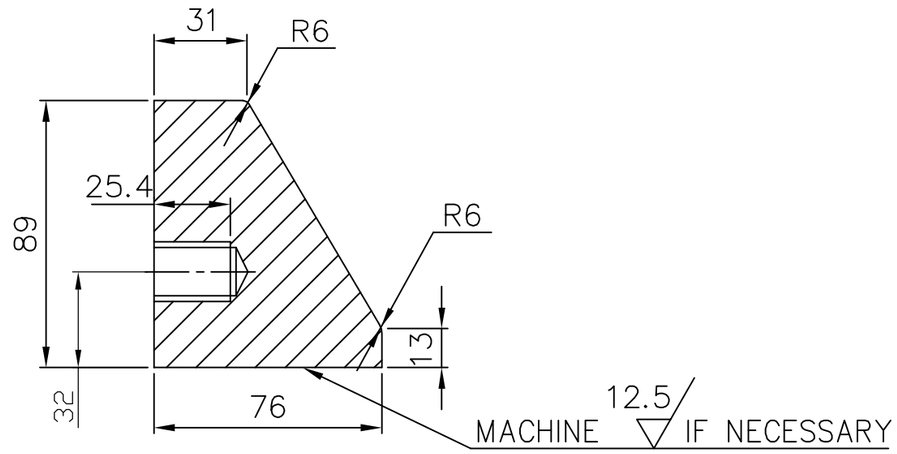

SECTION–AA

ITEM NO.	DESCRIPTION	DRAWING NO.	VAR. NO.	RAW MATERIAL SIZE OR CASTING DRG. NO. OR FORGING DRG. NO.	MATERIAL CODE / MATERIAL SPECN.	NET WT. / QUANTITY	GROSS WT.
02	SHEET 3.15x38x50				AA1011711133 / AA10111	0.02 / 1	
01	CASTING				BA9110233032 / AA19702	25.00 / 1	

THE FOLLOWING CONDITIONS APPLY EXCEPT OTHERWISE STATED.

1. REF. TO HY0230261 FOR UNSPECIFIED TOLERANCES.
2. CHAMFER M/CD. SHARP EDGES 1.2 TO 1.0 AT 45°.
3. INTERNAL M/CD. CORNER RADII 1 TO 0.7
4. THE SURFACE ROUGHNESS WHERE-EVER NOT SHOWN SHALL BE TAKEN FROM THE SURFACE ROUGHNESS SHOWN OUT SIDE THE BACK SLASH GIVEN OR THE TOP MOST RIGHT CORNER OF THE DRG.

TYPE OF PRODUCT

NAME OF CUSTOMER/PROJECT

BHARAT HEAVY ELECTRICALS LIMITED
HYDERABAD

	NAME	SIGN.	DATE	NO.OF VAR.
DRN.	ACS		12.12.01	0
CHD.	S.GHATGE		12.12.01	
APPD.	K.M.RAO		12.12.01	

DEPT. PULV.ENGG. CODE 446	UNTOL. DIMS. GR. ¢/M/¢	SCALE 1:5, 1:2	WEIGHT (KG) 25.02	REF. TO ASSY DRG. B-80-330-2 F-002 30-F-002-032	ITEM NO. 10	NO.OF ITEMS 33

TITLE MILL SIDE BOTTOM LINER

CARD CODE N.A.

DRAWING NO. 3-61-276-00049 REV. 05

SHEET NO. 1 NO OF SHEETS 1

REV.	DATE	ALTERED	APPD.
05	12.12.01	E.M.A / CHD.	
04	13.5.98	CHD.	

ZONE

TOL. ON 925 WAS ±3
M16 LOCATING DIMS ADDED

DRG. REVISED INCORPORATING ALL PREVIOUS REVISIONS DIMNS. 32, 72.25 & 780.5 DELETED. NOTE DRILL IN ASSY ADDED WPS ADDED.

THE INFORMATION ON THIS DOCUMENT IS THE PROPERTY OF BHARAT HEAVY ELECTRICALS LIMITED.
IT MUST NOT BE USED DIRECTLY OR INDIRECTLY IN ANY WAY DETERIMENTAL TO THE INTEREST OF THE COMPANY

COMPUTER FILE NAME 36100049.DWG/1328

REF. DRG. NO.

SIGN. AND DATE

INVENTORY NO

FIRST ANGLE PROJECTION

(ALL DIMENSIONS ARE IN mm)

DRG. NO. 3-61-276-00050

SHEET NO. 1 OF 1

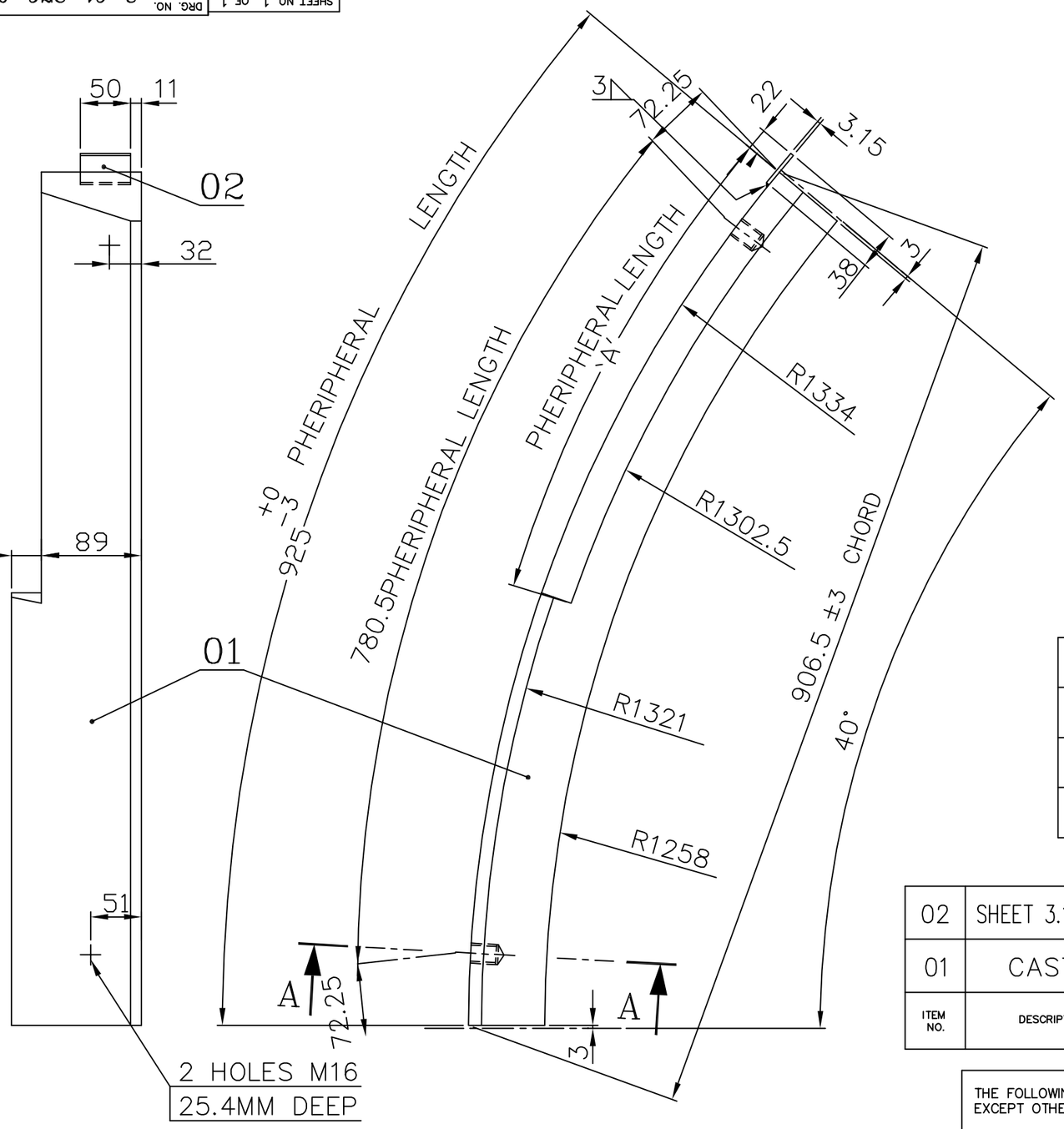

WELD SYMBOL	TYPE OF ELECTRODE	LENGTH OF WELD
3 ◺	E44 RNX	0.05M

WPS: WE006

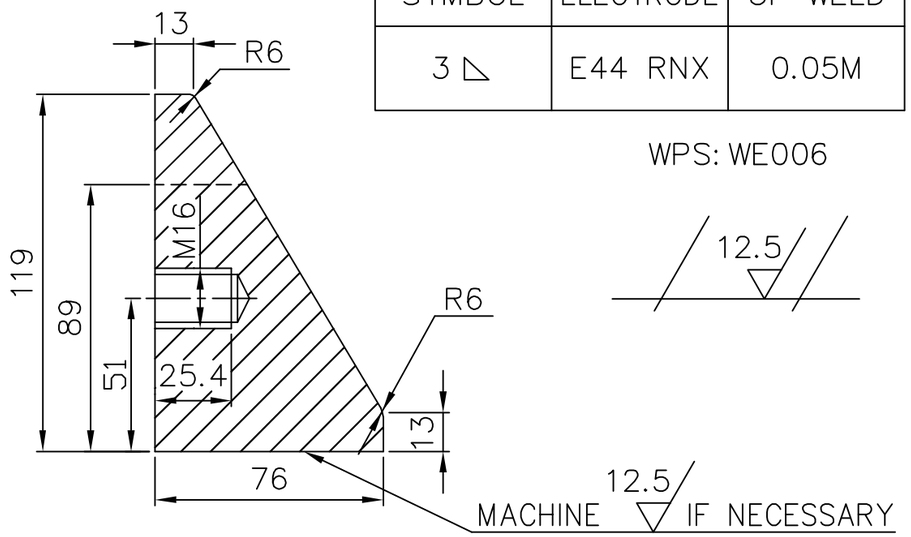

SECTION–AA

VAR	MILL	DIM 'A'	HYD. PATTERN NO.	* HYD. MAT. CODE
01	763	562	M–67–066	BA9110233040
02	783	588.4	M–67–504	BA9110233105
03	803	628.4	M–67–505	BA9110233113

ITEM NO.	DESCRIPTION	DRAWING NO.	VAR. NO.	RAW MATERIAL SIZE OR CASTING DRG. NO. OR FORGING DRG. NO.	MATERIAL CODE / MATERIAL SPECN.	NET WT. / QUANTITY	GROSS WT.
02	SHEET 3.15x38x50				AA1011711133	0.02	
					AA10111	1	
01	CASTING				*REFER TABLE	39.30	
					AA19702	1	

THE FOLLOWING CONDITIONS APPLY EXCEPT OTHERWISE STATED.

1. REF. TO HY0230261 FOR UNSPECIFIED TOLERANCES.
2. CHAMFER M/CD. SHARP EDGES 1.2 TO 1.0 AT 45°.
3. INTERNAL M/CD. CORNER RADII 1 TO 0.7
4. THE SURFACE ROUGHNESS WHERE–EVER NOT SHOWN SHALL BE TAKEN FROM THE SURFACE ROUGHNESS SHOWN OUT SIDE THE BACK SLASH GIVEN OR THE TOP MOST RIGHT CORNER OF THE DRG.

TYPE OF PRODUCT

NAME OF CUSTOMER/PROJECT

BHARAT HEAVY ELECTRICALS LIMITED
HYDERABAD

	NAME	SIGN.	DATE	NO.OF VAR.
DRN.	ACS		01.12.01	N.A.
CHD.	S.GHATGE		01.12.01	
APPD.	K.M.RAO		01.12.01	

DEPT. PULV.ENGG. CODE 446	UNTOL. DIMS. GR. ¢/M/¢	SCALE 1:5, 1:2	WEIGHT (KG) 39.32	REF. TO ASSY DRG. N.A.	ITEM NO. N.A.	NO.OF ITEMS N.A.

TITLE MILL SIDE BOTTOM LINER

CARD CODE N.A.

DRAWING NO. 3-61-276-00050 REV. 06

SHEET NO. 1 NO OF SHEETS 1

REV.	DATE	ALTERED	APPD.	ZONE
06	9.9.04	CHD.		DIM 32 WAS 51. DIM 51 ADDED.
05	12.12.01	CHD. E.M.A		TOL. ON 925 WAS ±3 M16 HOLES LOCATING DIMS ADDED
04	13.5.98	CHD.		DRG. REVISED INCORPORATING ALL PREVIOUS REVISIONS DIMNS. 51, 72.25 & 780.5 DELETED. NOTE DRILL IN ASSY ADDED WPS ADDED.

THE INFORMATION ON THIS DOCUMENT IS THE PROPERTY OF BHARAT HEAVY ELECTRICALS LIMITED. IT MUST NOT BE USED DIRECTLY OR INDIRECTLY IN ANY WAY DETERIMENTAL TO THE INTEREST OF THE COMPANY

COMPUTER FILE NAME 36100050.DWG/1328

INVENTORY NO | SIGN. AND DATE | REF. DRG. NO.

FIRST ANGLE PROJECTION

(ALL DIMENSIONS ARE IN mm)

DRG. NO. 3-61-276-00051

SHEET NO. 1 OF 1

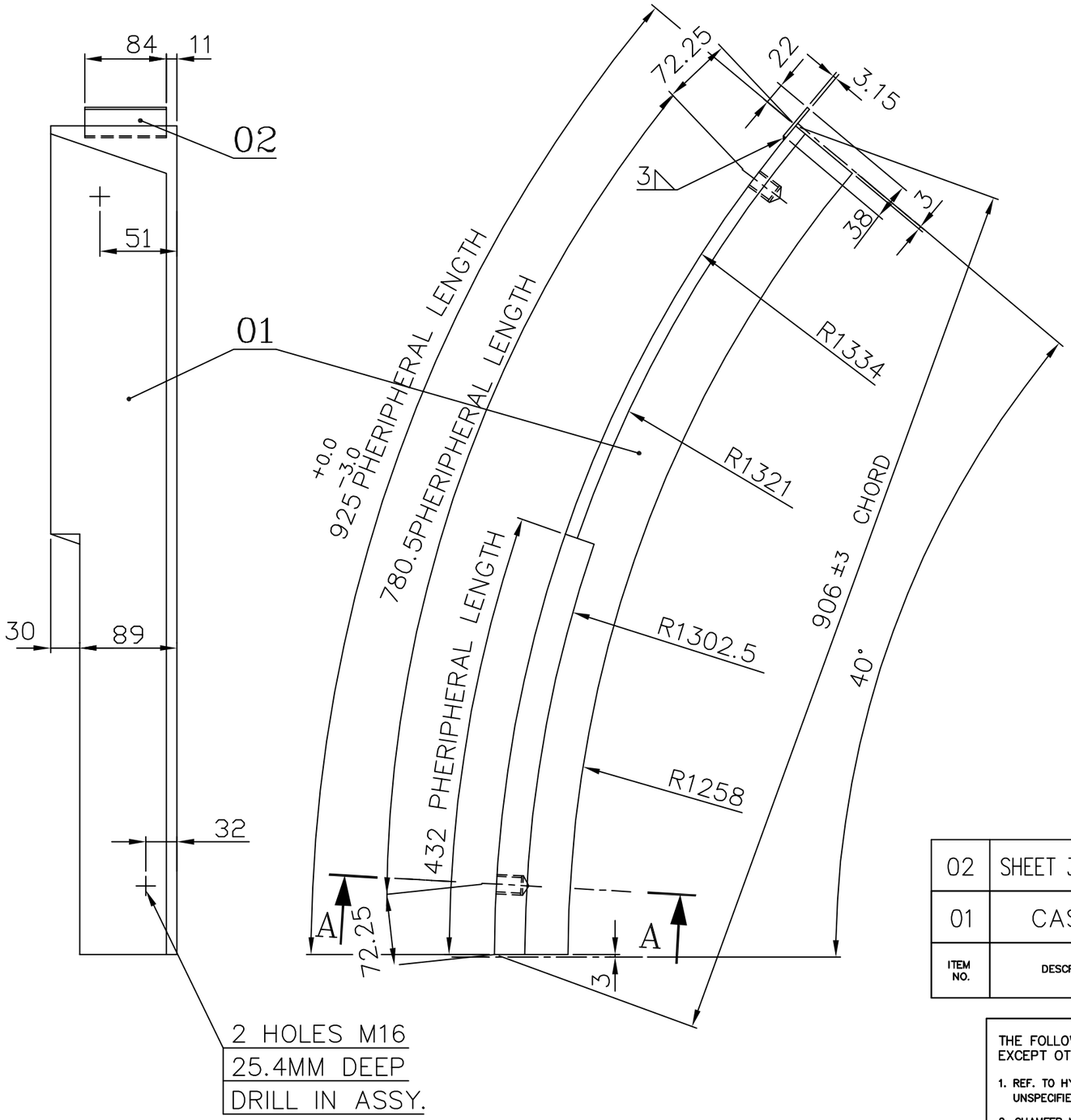

WELD SYMBOL	TYPE OF ELECTRODE	LENGTH OF WELD
3 ◺	E44 RNX	0.08M

WPS: WE006

12.5

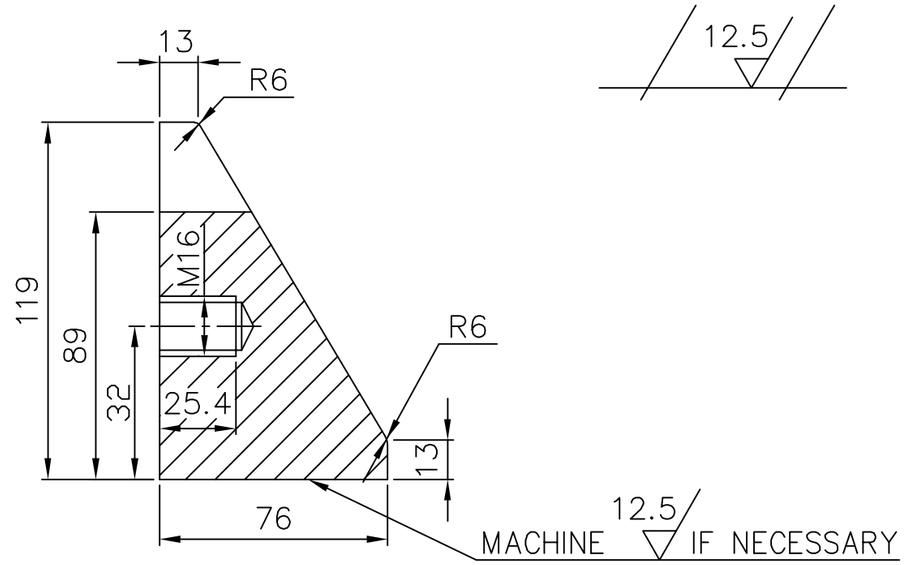

SECTION–AA

ITEM NO.	DESCRIPTION	DRAWING NO.	VAR. NO.	RAW MATERIAL SIZE OR CASTING DRG. NO. OR FORGING DRG. NO.	MATERIAL CODE / MATERIAL SPECN.	NET WT. / QUANTITY	GROSS WT.
02	SHEET 3.15x38x84				AA1011711133 / AA10111	0.08 / 1	
01	CASTING				BA9110233059 / AA19702	39.2 / 1	

THE FOLLOWING CONDITIONS APPLY EXCEPT OTHERWISE STATED.

1. REF. TO HY0230261 FOR UNSPECIFIED TOLERANCES.
2. CHAMFER M/CD. SHARP EDGES 1.2 TO 1.0 AT 45°.
3. INTERNAL M/CD. CORNER RADII 1 TO 0.7
4. THE SURFACE ROUGHNESS WHERE-EVER NOT SHOWN SHALL BE TAKEN FROM THE SURFACE ROUGHNESS SHOWN OUT SIDE THE BACK SLASH GIVEN OR THE TOP MOST RIGHT CORNER OF THE DRG.

TYPE OF PRODUCT

NAME OF CUSTOMER/PROJECT

BHARAT HEAVY ELECTRICALS LIMITED
HYDERABAD

	NAME	SIGN.	DATE	NO.OF VAR.
DRN.	ACS		12.12.01	N.A.
CHD.	S.GHATGE		12.12.01	
APPD.	K.M.RAO		12.12.01	

DEPT. PULV.ENGG. CODE 446	UNTOL. DIMS. GR. ¢/M/¢	SCALE 1:5, 1:2	WEIGHT (KG) 39.28	REF. TO ASSY DRG. N.A.	ITEM NO. N.A.	NO.OF ITEMS N.A.

TITLE MILL SIDE BOTTOM LINER

CARD CODE N.A.

DRAWING NO. 3-61-276-00051

REV. 04

SHEET NO. 1 NO OF SHEETS 1

REV.	DATE	ALTERED	APPD.
04	12.12.01	E.M.A CHD.	
03	13.5.98	CHD.	

ZONE

TOL. ON 925 WAS ±3.0
M16 HOLES LOCATING DIMS ADDED

DRG. REVISED INCORPORATING ALL PREVIOUS REVISIONS DIMNS. 32, 72.25 & 780.5 DELETED. NOTE DRILL IN ASSY ADDED WPS ADDED.

THE INFORMATION ON THIS DOCUMENT IS THE PROPERTY OF BHARAT HEAVY ELECTRICALS LIMITED.
IT MUST NOT BE USED DIRECTLY OR INDIRECTLY IN ANY WAY DETERIMENTAL TO THE INTEREST OF THE COMPANY

COMPUTER FILE NAME 36100051.DWG/1328

INVENTORY NO | SIGN. AND DATE | REF. DRG. NO.

FIRST ANGLE PROJECTION

(ALL DIMENSIONS ARE IN mm)

DRG.NO. 3-61-376-00060

THE INFORMATION ON THIS DOCUMENT IS THE PROPERTY OF BHARAT HEAVY ELECTRICALS LTD.
IT MUST NOT BE USED DIRECTLY OR INDIRECTLY IN ANY WAY DETRIMENTAL TO THE INTEREST OF THE COMPANY.

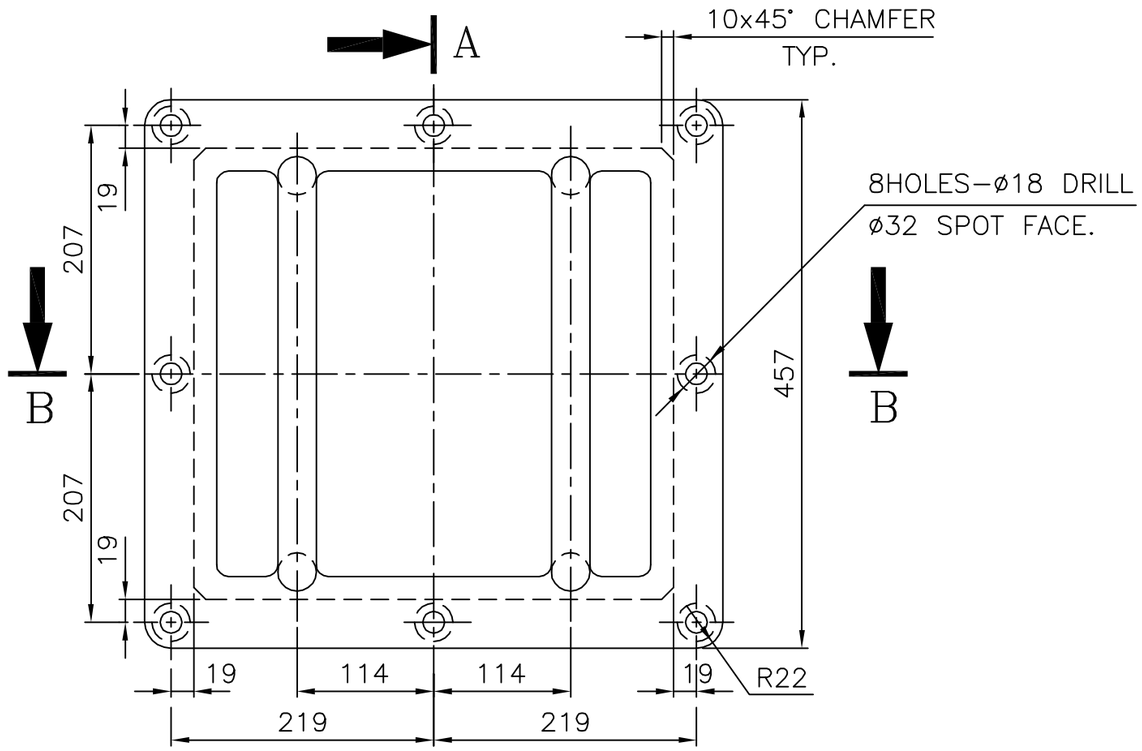

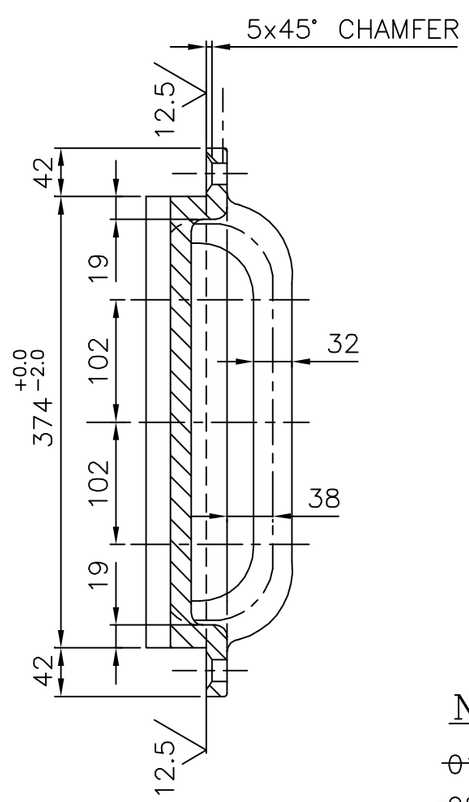

SECTION-AA

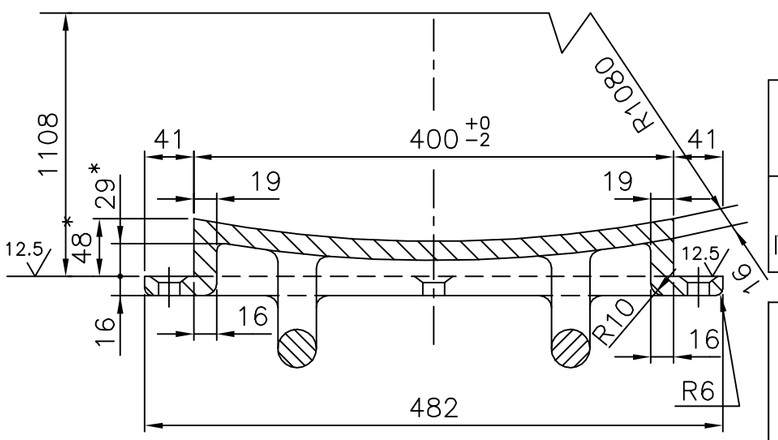

SECTION-BB

NOTES:-

~~01. CASTING DRG. No. 90-F-100-043~~

~~02. PATTERN ON 3-61-396-00060~~

* MAINTAIN WHEN MACHINING.

ITEM NO	DESCRIPTION	DRAWING NO.	VAR. NO.	RAW MATERIAL SIZE OR CASTING DRG.NO. OR FORGING DRG.NO.	MATERIAL CODE / MATERIAL SPECN.	NET WT.	GROSS WT.
01	CASTING				BA9110309004 / AA19703	43.00	

QUANTITY

THE FOLLOWING CONDITIONS APPLY EXCEPT OTHERWISE STATED...

1. REF.TO HY0230261 FOR UNSPECIFIED TOLERANCES.
2. CHAMFER M/CD SHARP EDGES 1.2 TO 1.0 AT 45°.
3. INTERNAL M/CD CORNER RADII 1 TO 0.7.
4. THE SURFACE ROUGHNESS WHEREVER NOT SHOWN SHALL BE TAKEN FROM THE SURFACE ROUGHNESS SHOWN OUT SIDE BACK SLASHES GIVEN AT THE TOP MOST RIGHT CORNER OF THE DRG.

REV.	DATE	ALTERED	CHD.	APPD.
05	23.10.97	UC		

ZONE: DRAWING REDRAWN BY INCORPORATING ALL PREVIOUS REVS.

TYPE OF PRODUCT OR NAME OF CUSTOMER/PROJECT

BHARAT HEAVY ELECTRICALS LTD. HYDERABAD

	NAME	SIGN.	DATE	NO.OF VAR.
DRN.	UNIC/BMR		23.10.97	/
CHD.	NDSAMUEL		23.10.97	
APPD.	S.GHATGE		23.10.97	

DEPT. PULV ENGG.	SCALE	WEIGHT (KG)	REF. TO ASSY DRG.	ITEM NO.	NO.OF ITEMS
CODE 446	1:5	43.00	B-RJ-1106-0	/	/

TITLE: SEPARATOR ACCESS DOOR

DRAWING NO. 3-61-376-00060 REV. 05

SHEET NO. 01 NO OF SHEETS 01

36100060.DWG FILE NAME

REF.DRG.NO.

INVENTORY NO.

TD-151/REV. 03 SIZE A3

FIRST ANGLE PROJECTION

(ALL DIMENSIONS ARE IN mm)

DRG.NO. 3-61-376-00064

THE INFORMATION ON THIS DOCUMENT IS THE PROPERTY OF BHARAT HEAVY ELECTRICALS LTD.
IT MUST NOT BE USED DIRECTLY OR INDIRECTLY IN ANY WAY DETRIMENTAL TO THE INTEREST OF THE COMPANY.

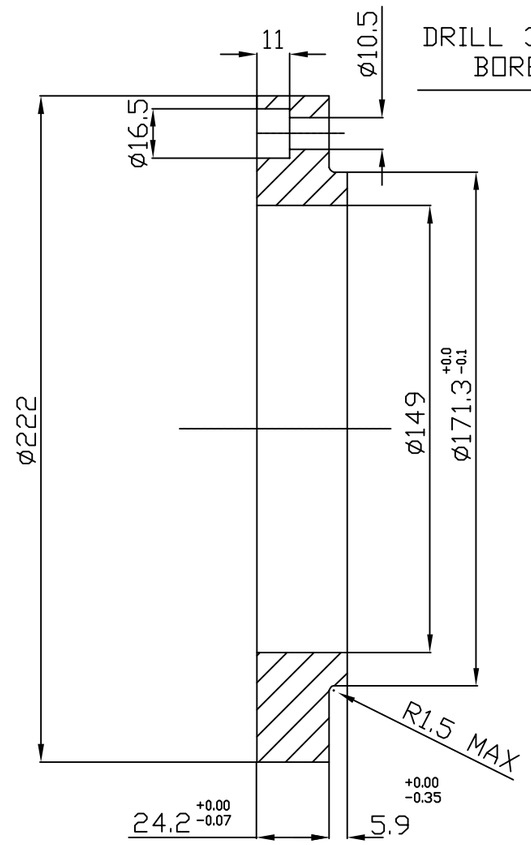

SECTION A–A

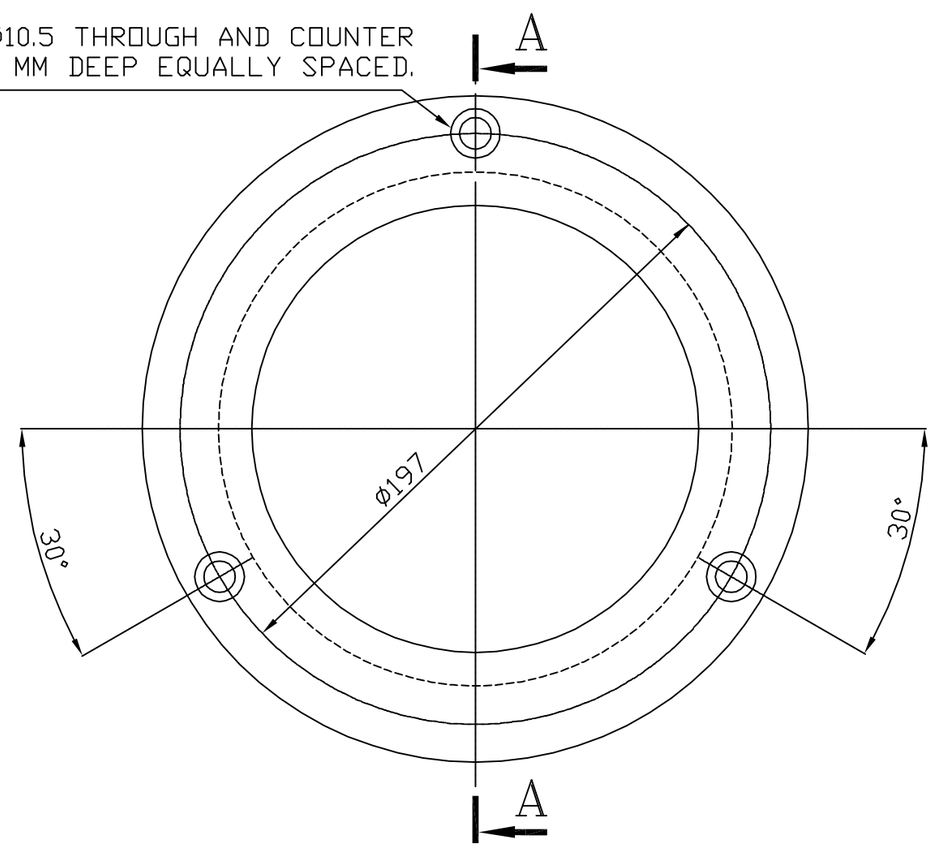

6.3

FINISH ALL SURFACES TO FINISH RATING MAX 6.3
ROUGHNESS RATING SHOWN ARE MAXIMUM
BOLT HOLES TO MATING WITH MATING PARTS.

ITEM NO	DESCRIPTION	DRAWING NO.	VAR. NO.	RAW MATERIAL SIZE OR CASTING DRG.NO. OR FORGING DRG.NO.	MATERIAL CODE / MATERIAL SPECN.	NET WT.	GROSS WT.
01	CASTING				BA9110250018 / AA19702	7.30 / 1	

THE FOLLOWING CONDITIONS APPLY EXCEPT OTHERWISE STATED...

1. REF.TO HY0230261 FOR UNSPECIFIED TOLERANCES.
2. CHAMFER M/CD SHARP EDGES 1.2 TO 1.0 AT 45°.
3. INTERNAL M/CD CORNER RADII 1 TO 0.7.
4. THE SURFACE ROUGHNESS WHEREVER NOT SHOWN SHALL BE TAKEN FROM THE SURFACE ROUGHNESS SHOWN OUT SIDE BACK SLASHES GIVEN AT THE TOP MOST RIGHT CORNER OF THE DRG.

TYPE OF PRODUCT
OR
NAME OF CUSTOMER/PROJECT

BHEL — BHARAT HEAVY ELECTRICALS LTD. HYDERABAD

	NAME	SIGN.	DATE	NO.OF VAR.
DRN.	E.M.ASHOK		14.6.2K	
CHD.	C.N.YADAGIRI		14.6.2K	
APPD.	K.M.RAO		14.6.2K	

DEPT.	PULVE.ENGG	SCALE	WEIGHT (KG)	REF. TO ASSY DRG.	ITEM NO.	NO.OF ITEMS
CODE	446	1:2	7.30			

TITLE
TRUNION BUSHING RETAINER

DRAWING NO. 3-61-376-00064 REV. 02

SHEET NO. 01 NO OF SHEETS 01

REV.	DATE	ALTERED	CHD.	APPD.	REV.	DATE	ALTERED E.M.ASHOK	CHD. C.N.Y	APPD. K.M.RAO
ZONE					02	14.6.2K	DRG. REDRAWN AT AUTOCAD		

INVENTORY NO. | REF.DRG.NO. | FILE NAME 36100064

TD-151/REV. 03 SIZE A3

FIRST ANGLE PROJECTION

(ALL DIMENSIONS ARE IN mm)

DRG.NO.3-61-376-00084

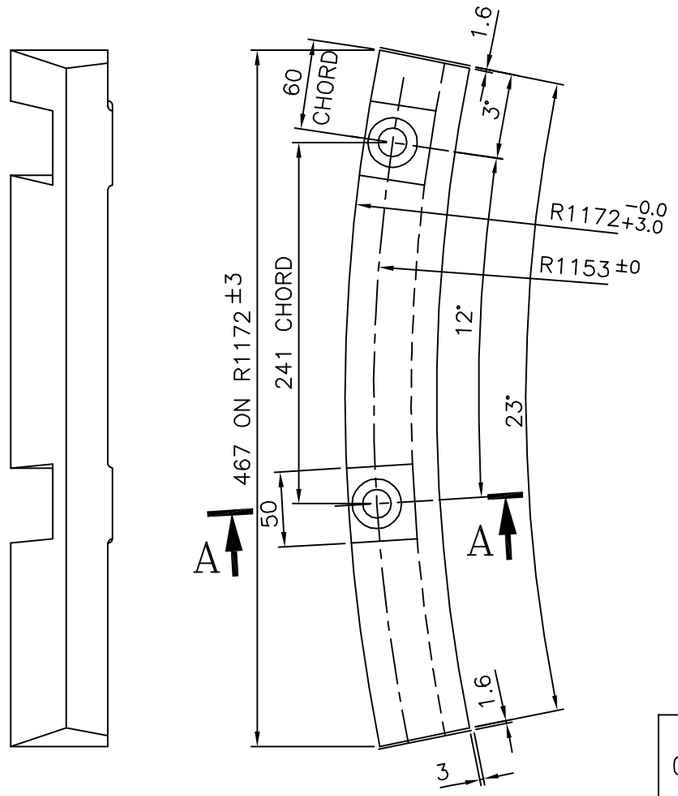

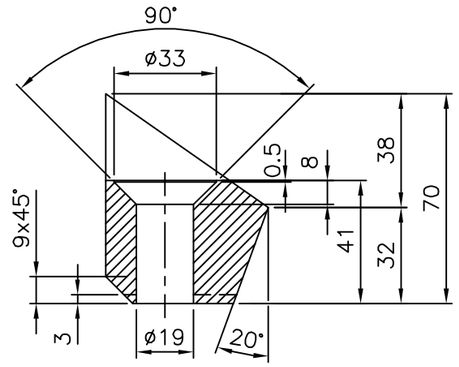

FOR 763 MILL

PATTERN No: 30-F-002-014

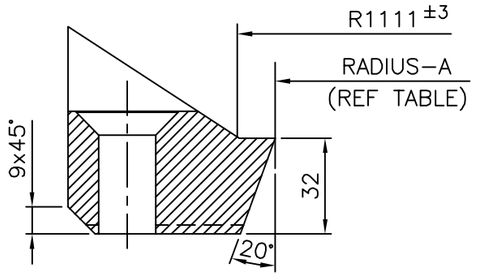

FOR 783 AND 803 MILLS

PATTERN NO: 30-F-002-013/1&013/2

SECTION-AA

NOTE:-

01. ALL FILLETS AND RADII TO BE 3mm UNLESS OTHERWISE SPECIFIED.

VAR No.	MILL SIZE	C.E PART No.	RADESH.A	PATTEREN No.
01	763	80 421		10-F002-013/1
02	783	80 421 A	1099 +3.0 −0.0	30-F002-013/1
03	803	80 421 B	1086 +3.0 −0.0	30-F002-013/2

ITEM NO	DESCRIPTION	DRAWING NO.	VAR. NO.	RAW MATERIAL SIZE OR CASTING DRG.NO. OR FORGING DRG.NO.	MATERIAL CODE / MATERIAL SPECN.	NET WT. / QUANTITY	GROSS WT.
03	CASTING (IS 210,GR.25)		01		BA9110333045 / AA19703	9.60	
02	CASTING (IS 210,GR.25)		01		BA9110333037 / AA19703	9.60	
01	CASTING (IS 210,GR.25)		01		BA9110333029 / AA19703	9.60	

THE FOLLOWING CONDITIONS APPLY EXCEPT OTHERWISE STATED...

1. REF.TO HY0230261 FOR UNSPECIFIED TOLERANCES.
2. CHAMFER M/CD SHARP EDGES 1.2 TO 1.0 AT 45°.
3. INTERNAL M/CD CORNER RADII 1 TO 0.7.
4. THE SURFACE ROUGHNESS WHEREVER NOT SHOWN SHALL BE TAKEN FROM THE SURFACE ROUGHNESS SHOWN OUT SIDE BACK SLASHES GIVEN AT THE TOP MOST RIGHT CORNER OF THE DRG.

REV.	DATE	ALTERED		REV.	DATE	ALTERED UC	
		CHD.	APPD.	05	10.10.97	CHD.	APPD.
ZONE				ZONE	DRAWING REDRAWN BY INCORPORATING ALL THE PREVIOUS REVISIONS.		

TYPE OF PRODUCT
OR
NAME OF CUSTOMER/PROJECT

BHARAT HEAVY ELECTRICALS LTD.
HYDERABAD

	NAME	SIGN.	DATE	NO.OF VAR.
DRN.	UNIC		10.10.97	/
CHD.	B.M.R			
APPD.				

DEPT. PULV ENGG.	SCALE	WEIGHT (KG)	REF. TO ASSY DRG.	ITEM NO.	NO.OF ITEMS
CODE 446	1:2 1:4	9.60	/	/	/

TITLE
SEPARATOR BOTTOM LINER

DRAWING NO. 3-61-376-00084 REV. 05

SHEET NO. 01 NO OF SHEETS 01

TD-151/REV. 03 SIZE A3

THE INFORMATION ON THIS DOCUMENT IS THE PROPERTY OF BHARAT HEAVY ELECTRICALS LTD. IT MUST NOT BE USED DIRECTLY OR INDIRECTLY IN ANY WAY DETRIMENTAL TO THE INTEREST OF THE COMPANY.

FILE NAME 36100084.DWG

REF.DRG.NO.

INVENTORY NO.

FIRST ANGLE PROJECTION

(ALL DIMENSIONS ARE IN mm)

MES

DRG. NO. 3-61-396-00231

SH. 01 OF 01

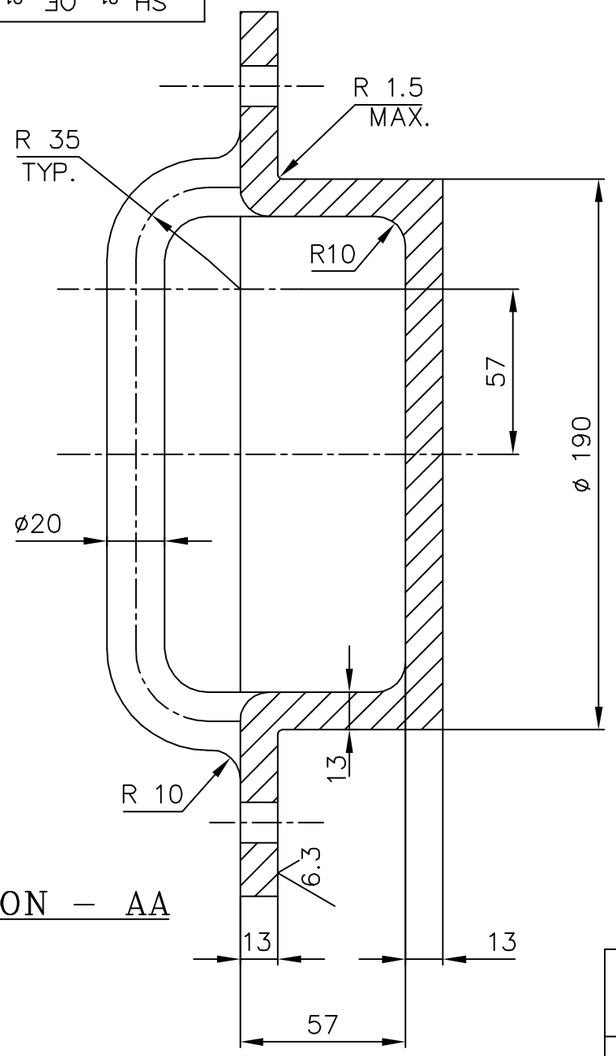

SECTION – AA

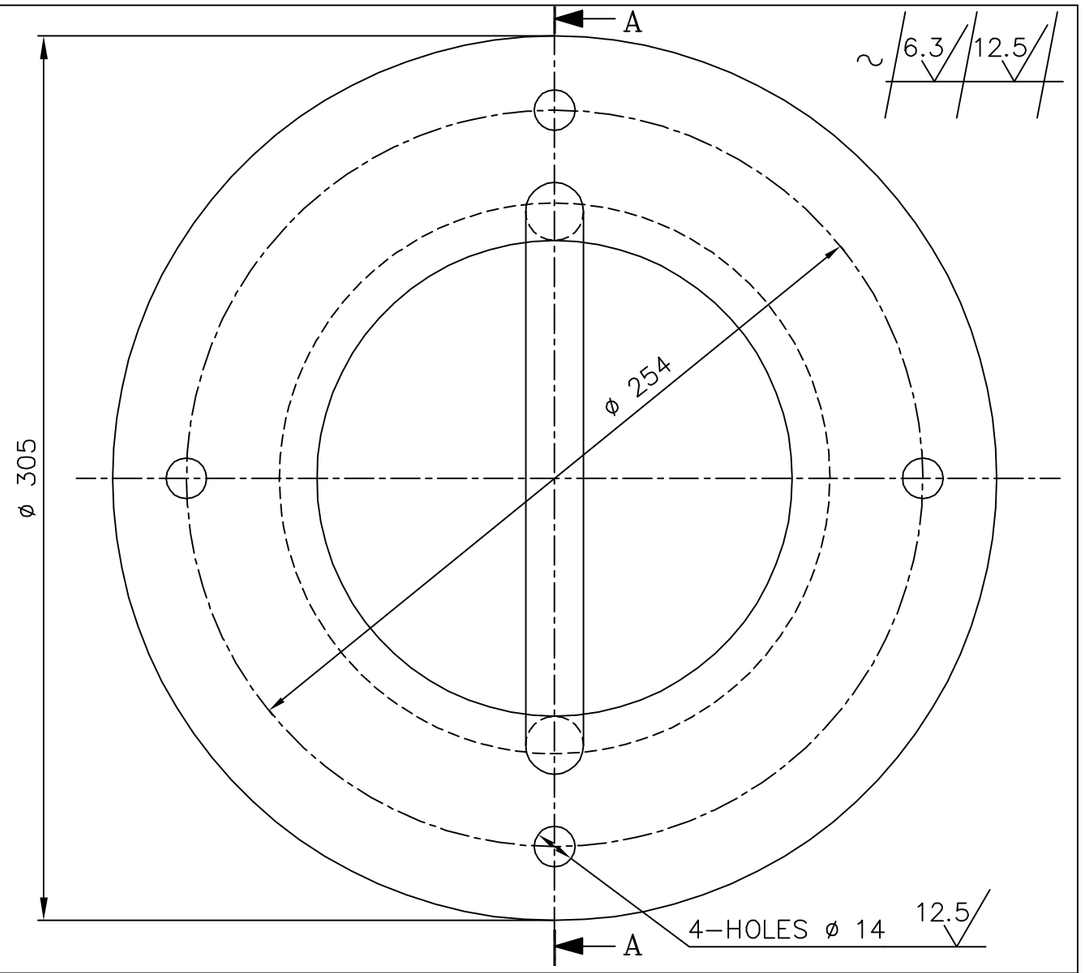

	CASTING			BA9110207040	11.20
				AA19702	
ITEM NO.	DESCRIPTION	DRAWING NO	IT NO.	MATL CODE	UNIT WT.
			VAR NO	MATL SPCN.	QTY

NOTES:

1. BREAK ALL SHARP EDGES & CORNERS
2. THIS IS A FINISH MACHINED DRG. CASTING SHALL BE SUPPLIED IN ROUGH MACHINED CONDITION WITH 5mm ALLOWANCE ON MACHINED SURFACES
3. BHEL HYD PATTERN NO: M-67-113

THE FOLLOWING CONDITIONS APPLY EXCEPT OTHERWISE STATED.

1. REF. TO HY0230261 FOR UNSPECIFIED TOLERANCES.
2. CHAMFER M/CD. SHARP EDGES 1.2 TO 1.0 AT 45°
3. INTERNAL M/CD. CORNER RADII 1 TO 0.7
4. THE SURFACE ROUGHNESS WHERE-EVER NOT SHOWN SHALL BE TAKEN FROM THE SURFACE ROUGHNESS SHOWN OUT SIDE THE BACK SLASH GIVEN ON THE TOP MOST RIGHT CORNER OF THE DRG.

TYPE OF PRODUCT OR NAME OF CUSTOMER/PROJECT: 1003 XRP BOWL MILL

BHARAT HEAVY ELECTRICALS LIMITED
HYDERABAD

	NAME	SIGN.	DATE	NO.OF VAR.
DRN.	ACAD		04.05.98	
CHD.	ND.SAMUEL		04.05.98	
APPD.	S.GHATGE		04.05.98	

DEPT.	UNTOL. DIMS.		SCALE	WEIGHT (KG)	REF. TO ASSY. DRG.	ITEM NO.	NO.OF ITEMS
BMD	GR.		1:2	11.20	0-61-388-00577	15	67
DEPT.CODE 446	¢/M/¢						

TITLE
INSPECTION HOLE COVER
(JOURNAL OPENING FRAME)

DRAWING NO. 3-61-396-00231 REV. 01

SHT. No 01 NO. OF SHT. 01

REV.	DATE	ALTERED	REV.	DATE	ALTERED
		CHD/APPD	01	04.05.98	CHD/APPD
ZONE			ZONE		DRG. REDRAWN INCORPORATING ALL PREVIOUS REVISIONS NOTES 2 & 4 DELETED.

INVENTORY NO | SIGN. AND DATE | REF. DRG. NO. B-101-00520-0 | COMPUTER FILE NAME 36100231.DWG

GENERAL DIMENSIONAL LIMITS,FITS & TOLERANCES AS PER HY0230261

THE INFORMATION ON THIS DOCUMENT IS THE PROPERTY OF BHARAT HEAVY ELECTRICALS LIMITED. IT MUST NOT BE USED DIRECTLY OR INDIRECTLY IN ANY WAY DETRIMENTAL TO THE INTEREST OF THE COMPANY

FIRST ANGLE PROJECTION

(ALL DIMENSIONS ARE IN mm)

MES

DRG. NO. 3-61-480-00347

SH. 01 OF 01

SECTION-AA

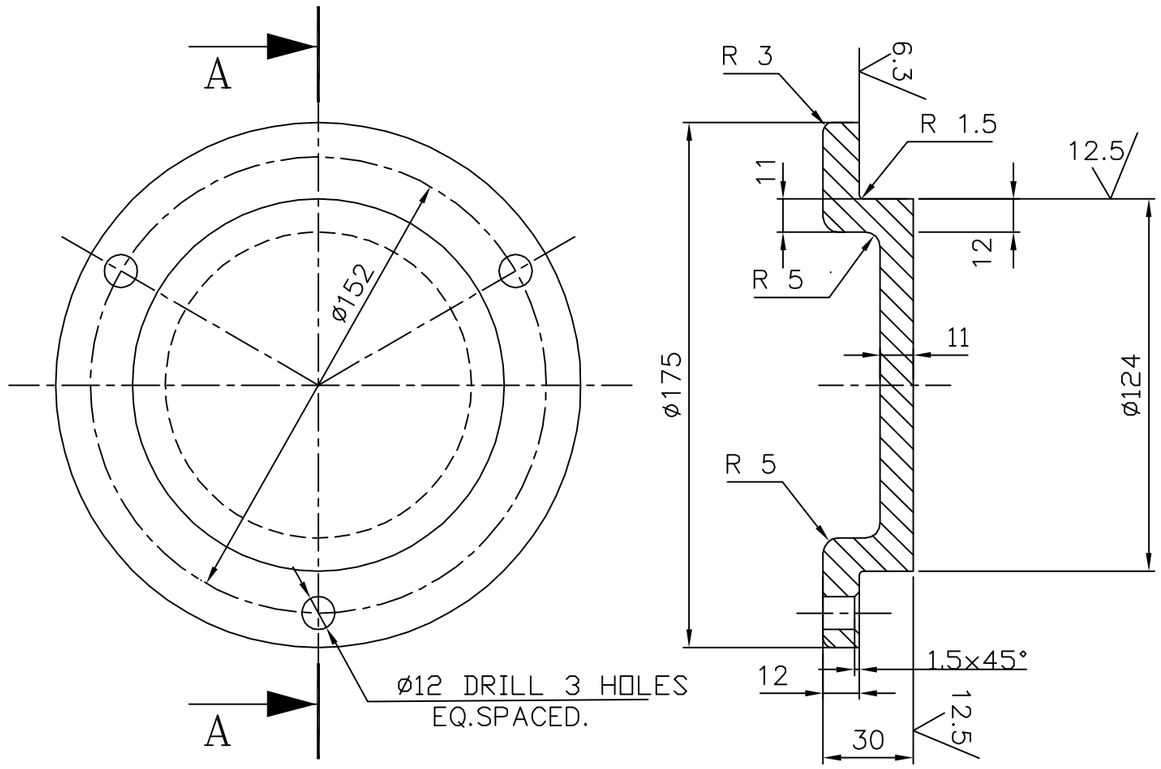

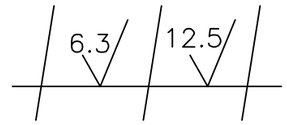

DEBURR SHARP EDGES AND CORNERS

	CASTING	HYD.PAT.NO M-67-132		BA9110207082	2.69
				AA19702	
ITEM NO.	DESCRIPTION	DRAWING NO	IT NO.	MATL CODE	UNIT WT.
			VAR NO	MATL SPCN.	QTY

THE FOLLOWING CONDITIONS APPLY EXCEPT OTHERWISE STATED.

1. REF. TO HY0230261 FOR UNSPECIFIED TOLERANCES.
2. CHAMFER M/CD. SHARP EDGES 1.2 TO 1.0 AT 45°
3. INTERNAL M/CD. CORNER RADII 1 TO 0.7
4. THE SURFACE ROUGHNESS WHERE-EVER NOT SHOWN SHALL BE TAKEN FROM THE SURFACE ROUGHNESS SHOWN OUT SIDE THE BACK SLASH GIVEN ON THE TOP MOST RIGHT CORNER OF THE DRG.

TYPE OF PRODUCT OR

NAME OF CUSTOMER/PROJECT

BHARAT HEAVY ELECTRICALS LIMITED
HYDERABAD

	NAME	SIGN.	DATE	NO.OF VAR.
DRN.	N.D.S		22.05.98	NA
CHD.	S.GHATGE		14.09.98	
APPD.	K.M.R		14.09.98	

DEPT.	UNTOL. DIMS.		SCALE	WEIGHT (KG)	REF. TO ASSY. DRG.	ITEM NO.	NO.OF ITEMS
BMD	GR. ¢/M/F		1:2	2.69	NA	NA	NA
DEPT.CODE 446							

TITLE
INSPECTION HOLE COVER.
(: MILL DISCHARGE VALVE:)

CARD CODE

DRAWING NO. 3-61-480-00347 REV. 02

SHT. No 01 NO. OF SHT. 01

REV.	DATE	ALTERED	REV.	DATE	ALTERED
		CHD/APPD	02	22.05.98	CHD/APPD
ZONE			ZONE		DRG. REDRAWN INCORPORATING ALL PREVIOUS REVISIONS

INVENTORY NO | SIGN. AND DATE | REF. DRG. NO. | COMPUTER FILE NAME 3610034 7.DWG

GENERAL DIMENSIONAL LIMITS,FITS & TOLERANCES AS PER HY0230261

THE INFORMATION ON THIS DOCUMENT IS THE PROPERTY OF BHARAT HEAVY ELECTRICALS LIMITED. IT MUST NOT BE USED DIRECTLY OR INDIRECTLY IN ANY WAY DETRIMENTAL TO THE INTEREST OF THE COMPANY

FIRST ANGLE PROJECTION

ALL DIMENSIONS ARE IN mm.

DJC

REV.	DATE		REV.	DATE		REV.	DATE	
03	15.09.98	ALTERED N.D.S			ALTERED			ALTERED
		CHECKED S.G			CHECKED			CHECKED
		APPROVED K.M.R			APPROVED			APPROVED

DRAWING REDRAWN ON CAD INCORPORATING ALL THE PREVIOUS REVISIONS.

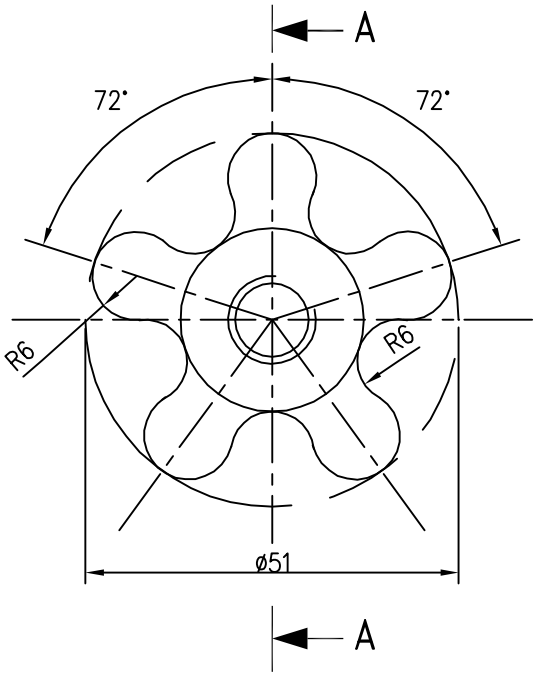

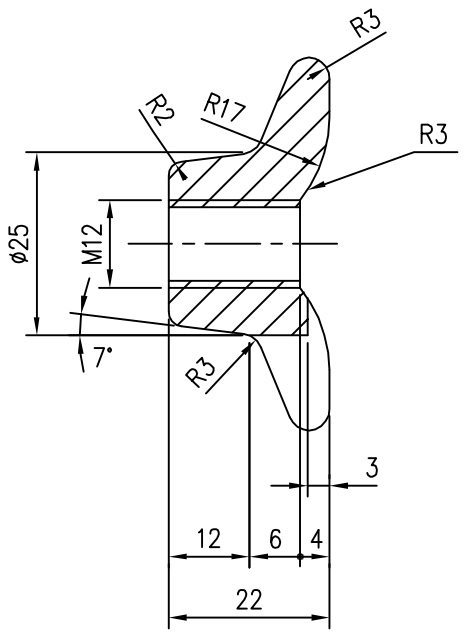

SECTION A-A

NOTE: –

1. DEBURR ALL SHARP EDGES.

CASTING			BA9110267026	0.09	
			AA19702	1	
DESCRIPTION & DRG. No.	VAR No.	RAW MATERIAL SIZE OR CASTING DRG.NO. OR FORGING DRG.NO.	MATL. CODE	NET.WT.	GROSS WT
			MATL. SPECN.	QTY.	

TYPE OF PRODUCT OR NAME OF CUSTOMER/PROJECT

BHARAT HEAVY ELECTRICALS LTD.
HYDERABAD

	NAME	SIGN	DATE
DRN.	N.D.S		15.9.98
CKD.	S.G		15.9.98
APPD.	K.M.R		15.9.98

NO.OF VAR. –

DEPT.	GRADE OF TOL. DIM.		SCALE	WEIGHT(K.G.)	REF.TO ASSY.DRG.	ITEM No.	No.OF ITEM
PULV. ENGG.	¢/M/f		1:1	0.09	1-61-388-01036	22	23
CODE 446							

TITLE

STAR WHEEL

DRAWING No. 4-61-376-00096

REV. 03

SHT. No. 1 | No. OF SHT. 1

REF. TO HY0230261 FOR UNSPECIFIED TOLERANCES.

THE INFORMATION ON THIS DOCUMENT IS THE PROPERTY OF BHARAT HEAVY ELECTRICALS LIMITED. IT MUST NOT BE USED DIRECTLY OR INDIRECTLY IN ANY WAY DETRIMENTAL TO THE INTEREST OF THE COMPANY.

COMPUTER No. 46100096.DWG

REF. DRG. No.

SIGN. & DATE

INVENTORY NO.

TD 152-REV.03

A4 SIZE

FIRST ANGLE PROJECTION

ALL DIMENSIONS ARE IN mm.

REV.	DATE			REV.	DATE			REV.	DATE	
02	25-02-03	ALTERED	E.M.ASHOK			ALTERED				ALTERED
		CHECKED	AMAN			CHECKED				CHECKED
		APPROVED	S.G			APPROVED				APPROVED

DRG REDRAWN IN AUTOCAD

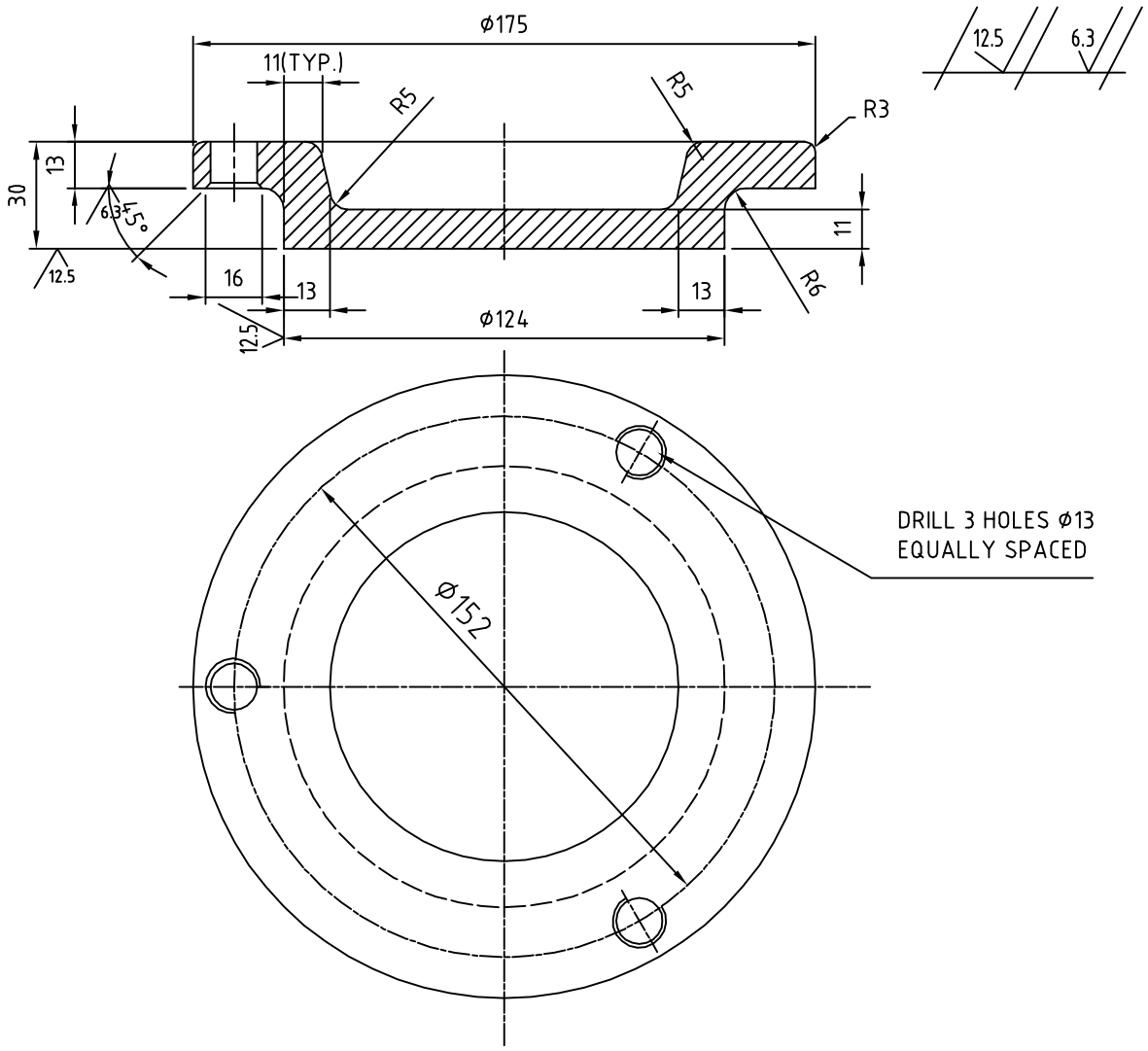

THE INFORMATION ON THIS DOCUMENT IS THE PROPERTY OF BHARAT HEAVY ELECTRICALS LIMITED.
IT MUST NOT BE USED DIRECTLY OR INDIRECTLY IN ANY WAY DETRIMENTAL TO THE INTEREST OF THE COMPANY.

COMPUTER NO. 4610358.DWG

REF. DRG. NO.

SIGN. & DATE

INVENTORY NO.

DESCRIPTION & DRG.NO.	VAR NO.	RAW MATERIAL SIZE OR CASTING DRG.NO. OR FORGING DRG.NO.	MATL. CODE	NET.WT.	GROSS WT
CASTING			BA9110207023	2.93	
			AA19702	1	
			MATL. SPECN.	QTY.	

TYPE OF PRODUCT OR NAME OF CUSTOMER/PROJECT: 883 / 1003/1103 XRP BM

BHARAT HEAVY ELECTRICALS LTD.
HYDERABAD

	NAME	SIGN	DATE	NO.OF VAR.
DRN.	E.M.ASHOK		25-02-03	NA
CKD.	AMAN		25-02-03	
APPD.	S.G		25-02-03	

REF. TO HY0230261 FOR UNSPECIFIED TOLERANCES.

DEPT.	PULVE ENGG	SCALE	WEIGHT(K.G.)	REF.TO ASSY.DRG.	ITEM NO.	NO.OF ITEM
CODE	446	1:2	2.93	0-61-400-00586		NA

TITLE: INSPECTION HOLE COVER (FAN INTAKE SIDE)

DRAWING NO. 4-61-496-00358 REV. 02

SHT.NO. 01 NO.OF SHT. 01

TD 152-REV.03

A4 SIZE

COPYRIGHT AND CONFIDENTIAL
The Information on this document is the property of BHARAT HEAVY ELECTRICALS LIMITED
It must not be used directly or indirectly in any way detrimental to the Interest of the company.

CARBON STEEL CASTINGS-FUSION WELDING QUALITY

1.0 GENERAL

This specification governs the quality requirements of Carbon Steel Castings-Fusion Welding Quality.

2.0 APPLICATION

For pressure containing parts for high temperature service and of quality suitable for assembly with other castings or wrought steel parts by fusion welding.

3.0 CONDITION OF DELIVERY

Normalised / Normalised & tempered

Rough machining of the castings shall be carried out, unless otherwise specified in BHEL order/drawing.

Castings shall not be painted

4.0 COMPLIANCE WITH NATIONAL STANDARDS

There is no Indian standard covering this material. However, assistance has been derived from ASTM A 216-1993, Gr: WCC, in preparing this specification.

5.0 DIMENSIONS AND TOLERANCES

The castings shall be true to the pattern/drawing.

Holes for machining up to and including 50 mm in diameter are to be cast solid, unless otherwise stated in BHEL order/drawing.

Unless otherwise specified in BHEL order/drawing, untoleranced dimensions for the castings shall be as per tolerance class 4 of BHEL standard AA 023 04 02.

6.0 MANUFACTURE

The steel for the castings shall be made by basic electric furnace process or such other process as may be agreed to between BHEL and the manufacturer.

The steel shall be fully killed.

7.0 HEAT TREATMENT

Heat treatment shall be carried out at suitable temperatures to give the properties specified.

Any flame or arc cutting which may have to be done, shall be carried out before heat treatment.

Test pieces shall also be heat treated along with the castings they represent.

8.0 FINISH

All castings shall be properly fettled and dressed and all surfaces shall be thoroughly cleaned.

Machined surfaces shall have the surface finish as indicated in the drawing

9.0 FREEDOM FROM DEFECTS

Castings shall be free from defects such as porosity , blow holes, sand inclusion, shrinkage, cavities, hard spots, cold shuts, cracks, etc., which may adversely affect machining and utility of castings.

When it is necessary to remove risers by flame cutting, care shall be taken to make the cut at a sufficient distance from the body of the casting so as to prevent any defect being introduced into the casting due to local heating.

10.0 CHEMICAL COMPOSITIION

The melt analysis of steel and the permissible variation in the composition of the castings from the melt analysis shall be as specified below:

Element	Melt analysis, Percent, max	Permissible Variation, percent
*Carbon	0.25	0.02
Silicon	0.60	0.05
*Manganese	1.20	0.06
Sulphur	0.045	0.008
Phosphorus	0.040	0.008

Note: 1. In the interest of uniform welding, the concentration of the unspecified alloying elements shall not exceed the limits specified below. Whenever specified in the enquiry/order, the test results of these elements shall also be included in the test certificate. However, the manufacture shall ensure that these elements are within the limits specified.

Element	Percent, Max.
Copper	0.30
Nickel	0.50
Chromium	0.50
Molybdenum	0.20
Vanadlum	0.03
1. Total content of these unspecified elements	1.00

2. For each reduction of 0.01% below the specified maximum carbon content, an increase of 0.04% Mn above the maximum specified will be permitted up to a maximum of 1.40%.

11.0 TEST SAMPLES

Manufacturers shall carryout mechanical testing as per following sampling plan.

11.1 Unless otherwise specified for castings weighting up to 500 kg. piece weight one keel block, separately cast per melt per heat treatment batch shall be supplied according to the sketch given below:

11.2 Unless otherwise specified castings weighing more than 500 kg shall be provided with integrally cast keel block.

11.3 Retests shall be carried out as per IS : 8800

11.4 Keel blocks with proper identification and representative of the castings shall be supplied along with the consignment for testing at BHEL works.

DETAIL OF KEEL BLOCK

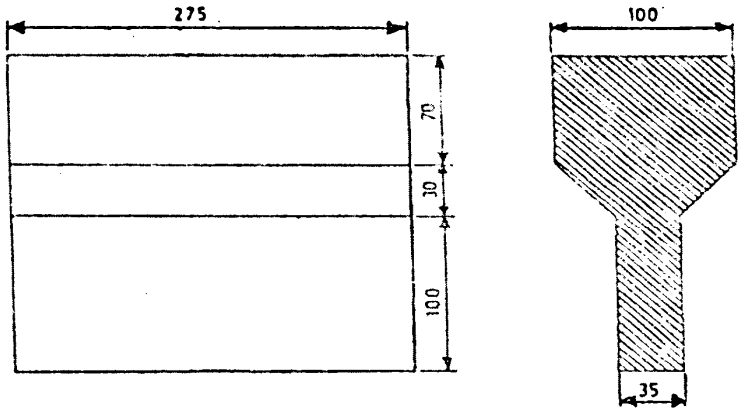

ALL DIMENSIONS IN mm

12.0 MECHANICAL PROPERTIES:

The test pieces, after being heat treated as per clause Cl.7.0 above, shall show the following properties:

12.1 Tensile

The test pieces shall show the following properties when tested in accordance with ASTM A 370

Tensile strength	:	485 - 655 N/mm^2
Yield strength	:	275 N/mm^2, min.
Elongation on 50mm gauge length	:	22 percent, min.
Reduction in area	:	35 percent, min.

12.2 Hardness (Brinell): for information only:

150 - 205 HB.

13.0 NON-DESTRUCTIVE TESTS:

The following tests shall be conducted:

1) Ultrasonic examination to BHEL standard AA 085 01 04 / AA 085 01 05
2) Liquid penetrate examination to BHEL standard AA 085 0131.
3) Magnetic particle examination to BHEL standard AA 085 01 33 and norms of acceptance as per BHEL standard AA 085 01 34.

Norms of acceptance shall be as specified in BHEL order/drawing

14.0 REPAIR OF CASTINGS

The manufacturer without the prior permission of BHEL shall not carry out repair of castings.

15.0 SCOPE OF THIRD PARTY INSPECTION:

Wherever, separate quality plan is not attached, the scope of third party inspection shall be as follows:

1. Review of supplier's declared chemical composition.
2. Selection of test samples for mechanical tests and witness of mechanical tests.
3. Witness of Non-destructive tests as applicable.
4. Review of HT charts.
5. Dimensional inspection.

16.0 TEST CERTIFICATES

Three copies of test certificates shall be supplied unless otherwise stated in BHEL order, preferably in the test certificate format annexed to this specification (Annexure -1).

In addition, the supplier shall ensure to enclose one copy of the test certificate along with their dispatch documents to facilitate quick clearance of the material.

The test certificate shall bear the following information:

i) Dimensional inspection.

ii) Detail of heat treatment

iii) Chemical composition & unspecified alloying elements whenever called for

iv) Results of mechanical tests

v) Results of NDT tests.

17.0 PACKING AND MARKING

Castings shall be suitably packed to prevent corrosion and damage during transit. Machined surfaces shall be properly protected with anticorrosive compounds. Each package or casting (when supplied separately) shall be legibly marked with the following information.

AA 195 11: C.S. Castings - F.W. Quality
BHEL Order No.
Consignment/Identification No.
Melt No.
Weight
Supplier's Name

18.0 REFERRED STANDARDS (Latest Publications Including Amendments):

1. AA 023 04 02	2. AA 085 01 04	3. AA 085 01 05	4. AA 085 01 31
5. AA 085 01 34	6. ASTM A 216	7. ASTM A 370	8. IS : 8800

ANNEXURE 1 - RECOMMENDED TEST CERTIFICATE FORMAT FOR CASTINGS

SUPPLIERS'S NAME AND ADDRESS

1. Customer :
2. TC No. & Date :
3. PO No. :
4. Process of Melting :
5. Deoxidisation Process
6. Cast No. & Date :
7. Batch No. :
8. Heat Code :
9. Spec.. No. :
10. Test Bar Size

11. CASTING COVERED BY T.C.

Sl. No.	Drawing No. & Item No.	Description	Quantity & Weight

12. CHEMICAL COMPOSITION (PERCENT)

Element	C	Si	Mn	S	P										
As per Spec. Min.															
As per Spec. Max..															
Actual Values.															

13. HEAT TREATMENT
(To be accompanied by Recorder Chart, wherever called for)

Condition	Temp.°C	Soaking Time, Hrs..	Cooling Medium

14. MECHANICAL PROPERTIES

	T.S. N/mm2	Y.S. 0.5/0.2% Proof N/mm2	% E on GL 5.65 SO	% R.A. Min	Hardness BHN Min. 3 Values	Impact Value, Joules	Bend	
As per Spec. Min.								
As per Spec. Max.								
Actual Values.								

15. Surface Finish (When called for in the order/drg)	
16. DIMENSIONAL INSPECTION	

17.NON-DESTRUCTIVE TESTS

Nature of Test	Acceptance Level	Instrument used	Range	Results	Any other details
Ultrasonic					
Radiographic					
Dye Penetrant/ Magnetic Particle					

18. OTHER TESTS, IF ANY (MICRO-Scopic, Hydraulic, Etc.)	
19. IDENTIFICATION ON CASTING AS PER CPS.	

We hereby certify that the items mentioned above have been tested and inspected in our presence and are found to be in accordance with the drawings, specifications and purchase order.

Signature & Seal of the Inspecting Officer
(Purchase Representative)

Date :

Signature and Seal of the Chief of Quality Control
Chief Metallurgist of the Supplier.

Date :

INSTRUCTION:

a) If steel is produced by LD or Oxygen process, Nitrogen content should be furnished and shall not exceed 0.009%
b) Test Certificates are to be furnished as per Purchase Order and Specifications, in A4 Size transparent paper.
c) All the entries including signature should be in black ink.
d) If testing is done by outside agencies, the original TCs shall be furnished.
e) The actual Test Certificate may run into more than one A4 size paper, if needed, to facilitate filling up of details.

GREY IRON CASTINGS - Gr: FG 200

1.0 GENERAL

This specification governs the quality requirements of Grey Iron Castings having a tensile strength of 200 N/mm^2.

2.0 APPLICATION

Suitable for general engineering purposes.

3.0 CONDITION OF DELIVERY

As cast or cast and stress relieved or rough machined or rough machined and stress relieved as specified in BHEL order/drawing.

Castings shall not be painted.

4.0 COMPLIANCE WITH NATIONAL / INTERNATIONAL STANDARD

Castings shall comply with the following national standards and also meet the requirements of this specification.

IS: 210-1993 (RA-2004) : Grey Iron Castings
Gr: FG 200

5.0 DIMENSION AND TOLERANCES

Castings shall be true to the pattern / drawing.

Holes for machining up to and including 50mm in diameter are to be cast solid, unless otherwise stated in BHEL order / drawing.

Unless otherwise specified in BHEL order/ drawing, untoleranced dimensions for the casings shall be as per tolerance class 5 of BHEL standard AA 023 04 02.

6.0 MANUFACTURE

The castings shall be cast from the metal melted or refined in any suitable metallurgical plant other than an iron ore smelting furnace.

All castings above five tonnes shall be mould cooled. Under mould cooling process, the mould should not be disturbed until the hottest portion of the casting cools down to 300^{0}C.

7.0 HEAT TREATMENT

Castings shall be artificially aged (stress relieving) by heating in a furnace to a temperature of 520 to 580^{0}C (recommended), whenever specified.

Test pieces shall also be heat treated along with the castings they represent.

COPYRIGHT AND CONFIDENTIAL
The Information on this document is the property of BHARAT HEAVY ELECTRICALS LIMITED
It must not be used directly or Indirectly in any way detrimental to the Interest of the company.

8.0 FINISH

All castings shall be properly fettled and dressed and all surfaces shall be thoroughly cleaned. Whenever specified, the machined surfaces shall have the surface finish as indicated in the drawing.

9.0 FREEDOM FROM DEFECTS

Castings shall sound, clean, free from defects such as porosity, blow holes, sand inclusions, shrinkage's, cavities, hard spots, cold shuts, cracks, etc. which may adversely affect machining and utility of castings.

10.0 CHEMICAL COMPOSITION

The composition of iron is left to the discretion of the manufacturer. (But limit of sulphur and phosphorus may be specified by BHEL, if desired).

In case of special castings, the detailed chemical composition shall be as agreed between BHEL and the manufacturer.

11.0 TEST SAMPLES:

11.1 **Provision of Test Bars :**

All the test bars shall be cast separately in sand moulds and the number of test bars required shall be as specified in clause 11.2 below. They shall be cast at the same time and from the same melt as the castings they represent..

The test bar material shall be identifiable with that of the castings represented.

When castings are subjected to heat treatment and the test bars shall be heat treated together with the castings they represent.

11.2 **Frequency Of Testing:**

The number of tests required for each melt or batch of castings shall be as laid in table 1 below.

Table 1: Number of Tests

Group	Mass of Individual Castings	Test Requirements	Test Samples
* 1	upto 12.5 kg	One test for every 500kg of castings or part thereof.	3
* 2	over 12.5 kg and upto 50 kg	One test for every 1 tonne of castings or part thereof.	3
* 3	over 50 kg and upto 500 kg	One test for every 2 tonnes of castings or part thereof.	3
* 4	over 500 kg and upto 1 tonne	One test for every 3 tonnes of castings or part thereof.	3
5	over 1 tonne	One test for every 4 tonnes of castings or part thereof or one test for every casting weighing 4 tonnes or more.	3

* In group 1, 2, 3 & 4 all castings represented by one test shall be poured from the same ladle or same heat as the bars provided for the test.

11.3 **Size of Test Bars:**

A test bar from which the tensile test piece is machined shall be cast as a uniform cylindrical bar of 30mm diameter. The tolerance on the diameter shall be + 2mm, - 0 mm.

The minimum length of the test bar shall be 230mm.

11.4 **Dimensions of Test Pieces:**

Test pieces shall conform to the dimensions as per IS:210.

Note: Test bars as specified above with proper identification and representative of the castings shall be supplied along with the consignment for testing at BHEL works.

12.0 MECHANICAL PROPERTIES

12.1 Tensile:

The test pieces prepared in accordance with clause 11.0 shall show a tensile strength of 200 N/mm^2, minimum, when tested in accordance with IS:1608.

12.2 Hardness (Brinell)

Hardness shall be measured on actual casting at three different places. The castings shall have a Brinell Hardness in the range of 160 to 220 HB, when tested in accordance with IS 1500.

13.0 OPTIONAL TESTS

If specified in the drawing/order, the following tests shall be conducted.

13.1 Non-destructive Test

Magnetic Particle Inspection:

Magnetic Particle Inspection as per BHEL standard AA 085 01 33 and norms of acceptance as per AA 085 01 34 at level 2.

13.2 Hydraulic:

Hydraulic test shall be conducted by the manufacturer. In case hydraulic testing as prescribed on the BHEL order/drawing is not carried out at the manufacturer's works, the same shall be carried out by BHEL after necessary machining. However, the manufacturer shall guarantee against any leakage when tested at BHEL's end.

Test pressure and duration of test shall be as specified in BHEL order/drawing.

14.0 RETEST

Retest shall be done as per IS:210.

15.0 REPAIR OF CASTINGS

Repair of castings shall not be carried out by the manufacturer without the prior permission of BHEL.

16.0 SCOPE OF THIRD PARTY INSPECTION:

Wherever, separate quality plan is not attached, the scope of third party inspection shall be as follows:

1. Review of supplier's declared chemical composition.
2. Selection of test samples for mechanical tests and witness of mechanical tests.
3. Witness of Non-destructive tests as applicable.
4. Review of HT charts.
5. Dimensional inspection.

17.0 TEST CERTIFICATES

Three copies of test certificates shall be supplied unless otherwise stated in order, preferably in the test certificate format annexed to this specification (Annexure -1).

In addition, the supplier shall ensure to enclose one copy of the test certificate alongwith their dispatch documents to facilitate quick clearance of the material.

The following details shall be furnished in the test certificate:

1. Dimensional inspection
2. Detail of heat treatment
3. Hardness value
4. NDT
5. Optional tests called for in the drawing/order.

18.0 PACKING AND MARKING

Castings shall be suitably packed to prevent corrosion and damage during transit. Machined surfaces shall be properly protected with anticorrosive compounds. Each package or casting (when supplied separately) shall be legibly marked with the following information.

AA 19702: Grey Iron Castings-Gr: FG 200
BHEL Order No.
Consignment/Identification No.
Melt No.
Weight
Supplier's Name

19.0 REFERRED STANDARDS (Latest Publications Including Amendments):

1. IS: 210 2. IS:1500 3. IS:1608 4. AA 023 04 02

4. AA 085 01 33 5. AA 085 01 34

ANNEXURE 1 - RECOMMENDED TEST CERTIFICATE FORMAT FOR CASTING

SUPPLIERS'S NAME AND ADDRESS

1. Customer :
2. TC No. & Date :
3. PO No. :
4. Process of Melting :
5. Deoxidisation Process
6. Cast No. & Date :
7. Batch No. :
8. Heat Code :
9. Spec., No. :
10. Test Bar Size

11. CASTING COVERED BY T.C.

Sl. No.	Drawing No. & Item No.	Description	Quantity & Weight

12. CHEMICAL COMPOSITION (PERCENT)

Element	C	Si	Mn	S	P										
As per Spec. Min.															
As per Spec. Max.															
Actual Values.															

13. HEAT TREATMENT
(To be accompanied by Recorder Chart, wherever called for)

Condition	Temp.°C	Soaking Time, Hrs.,	Cooling Medium

14. MECHANICAL PROPERTIES

	T.S. N/mm2	Y.S. 0.5/0.2% Proof N/mm2	% E on GL 5.65 SO	% R.A. Min	Hardness BHN Min. 3 Values	Impact Value, Joules	Bend	
As per Spec. Min.								
As per Spec. Max.								
Actual Values.								

15. Surface Finish (When called for in the order/drg)	
16. DIMENSIONAL INSPECTION	

17. NON-DESTRUCTIVE TESTS

Nature of Test	Acceptance Level	Instrument used	Range	Results	Any other details
Ultrasonic					
Radiographic					
Dye Penetrant/ Magnetic Particle					

18. OTHER TESTS, IF ANY (MICRO-Scopic, Hydraulic, Etc.)	
19. IDENTIFICATION ON CASTING AS PER CPS.	

We hereby certify that the items mentioned above have been tested and inspected in our presence and are found to be in accordance with the drawings, specifications and purchase order.

Signature & Seal of the Inspecting Officer
(Purchase Representative)

Signature and Seal of the Chief of Quality Control
Chief Metallurgist of the Supplier.

Date :

Date :

INSTRUCTION :

a) If steel is produced by LD or Oxygen process, Nitrogen content should be furnished and shall not exceed 0.009%
b) Test Certificates are to be furnished as per Purchase Order and Specifications, in A4 Size transparent paper.
c) All the entries including signature should be in black ink.
d) If testing is done by outside agencies, the original TCs shall be furnished.
e) The actual Test Certificate may run into more than one A4 size paper, if needed, to facilitate filling up of details.

GREY IRON CASTINGS - Gr: FG 260

1.0 GENERAL

This specification governs the quality requirements of Grey Iron Castings having a tensile strength of 260 N/mm^2.

2.0 APPLICATION

Suitable for general engineering purposes.

3.0 CONDITION OF DELIVERY

As cast or cast and stress relieved or rough machined or rough machined and stress relieved as specified in BHEL order/drawing.

Castings shall not be painted.

4.0 COMPLIANCE WITH NATIONAL / INTERNATIONAL STANDARD

Castings shall comply with the following national standards and also meet the requirements of this specification.

IS: 210-1993 : Grey Iron Castings
Gr: FG 260

5.0 DIMENSION AND TOLERANCES

Castings shall be true to the pattern / drawing.

Holes for machining up to and including 50mm in diameter are to be cast solid, unless otherwise stated in BHEL order / drawing.

Unless otherwise specified in BHEL order/ drawing, untoleranced dimensions for the casings shall be as per tolerance class 5 of BHEL standard AA 023 04 02.

6.0 MANUFACTURE

The castings shall be cast from the metal melted or refined in any suitable metallurgical plant other than an iron ore smelting furnace.
All castings above five tonnes shall be mould cooled. Under mould cooling process, the mould should not be disturbed until the hottest portion of the casting cools down to 300^{0}C.

7.0 HEAT TREATMENT

Castings shall be artificially aged (stress relieving) by heating in a furnace to a temperature of 520 to 580^{0}C (recommended), whenever specified.

Test pieces shall also be heat treated along with the castings they represent.

COPYRIGHT AND CONFIDENTIAL
The Information on this document is the property of BHARAT HEAVY ELECTRICALS LIMITED
It must not be used directly or Indirectly in any way detrimental to the Interest of the company.

8.0 FINISH

All castings shall be properly fettled and dressed and all surfaces shall be thoroughly cleaned. Whenever specified, the machined surfaces shall have the surface finish as indicated in the drawing.

9.0 FREEDOM FROM DEFECTS

Castings shall sound, clean, free from defects such as porosity, blow holes, sand inclusions, shrinkage's, cavities, hard spots, cold shuts, cracks, etc. which may adversely affect machining and utility of castings.

10.0 CHEMICAL COMPOSITION

The composition of iron is left to the discretion of the manufacturer. (But limit of sulphur and phosphorus may be specified by BHEL, if desired).

In case of special castings, the detailed chemical composition shall be as agreed between BHEL and the manufacturer.

11.0 TEST SAMPLES:

11.1 Provision of Test Bars :

All the test bars shall be cast separately in sand moulds and the number of test bars required shall be as specified in clause 11.2 below. They shall be cast at the same time and from the same melt as the castings they represent..

The test bar material shall be identifiable with that of the castings represented.

When castings are subjected to heat treatment and the test bars shall be heat treated together with the castings they represent.

11.2 Frequency Of Testing:

The number of tests required for each melt or batch of castings shall be as laid in table 1 below.

Table 1: Number of Tests

Group	Mass of Individual Castings	Test Requirements	Test Samples
* 1	upto 12.5 kg	One test for every 500kg of castings or part thereof.	3
* 2	over 12.5 kg and upto 50 kg	One test for every 1 tonne of castings or part thereof.	3
* 3	over 50 kg and upto 500 kg	One test for every 2 tonnes of castings or part thereof.	3
* 4	over 500 kg and upto 1 tonne	One test for every 3 tonnes of castings or part thereof.	3
5	over 1 tonne	One test for every 4 tonnes of castings or part thereof or one test for every casting weighing 4 tonnes or more.	3

* In group 1, 2, 3 & 4 all castings represented by one test shall be poured from the same ladle or same heat as the bars provided for the test.

11.3 **Size of Test Bars:**

A test bar from which the tensile test piece is machined shall be cast as a uniform cylindrical bar of 30mm diameter. The tolerance on the diameter shall be + 2mm, - 0 mm.

The minimum length of the test bar shall be 230mm.

11.4 **Dimensions of Test Pieces:**

Test pieces shall conform to the dimensions as per IS:210.

Note: Test bars as specified above with proper identification and representative of the castings shall be supplied along with the consignment for testing at BHEL works.

12.0 MECHANICAL PROPERTIES

12.1 Tensile:

The test pieces prepared in accordance with clause 11 shall show a tensile strength of 260 N/mm^2, minimum, when tested in accordance with IS:1608.

12.2 Hardness (Brinell)

Hardness shall be measured on actual casting at three different places. The castings shall have a Brinell Hardness in the range of 180 to 230 HB, when tested in accordance with IS 1500.

13.0 OPTIONAL TESTS

If specified in the drawing/order, the following tests shall be conducted.

13.1 Non-destructive test

Magnetic Particle Inspection:

Magnetic Particle Inspection as per BHEL standard AA 085 01 33 and norms of acceptance as per AA 085 01 34 at level 2.

13.2 Hydraulic:

Hydraulic test shall be conducted by the manufacturer. In case hydraulic testing as prescribed on the BHEL order/drawing is not carried out at the manufacturer's works, the same shall be carried out by BHEL after necessary machining. However, the manufacturer shall guarantee against any leakage when tested at BHEL's end.

Test pressure and duration of test shall be as specified in BHEL order/drawing.

14.0 RETEST

Retest shall be done as per IS:210.

15.0 REPAIR OF CASTINGS

Repair of castings shall not be carried out by the manufacturer without the prior permission of BHEL.

CS-655

16.0 SCOPE OF THIRD PARTY INSPECTION:

Wherever, separate quality plan is not attached, the scope of third party inspection shall be as follows:

1. Review of supplier's declared chemical composition.
2. Selection of test samples for mechanical tests and witness of mechanical tests.
3. Witness of Non-destructive tests as applicable.
4. Review of HT charts.
5. Dimensional inspection.

17.0 TEST CERTIFICATES

Three copies of test certificates shall be supplied unless otherwise stated on order, preferably in the test certificate format annexed to this specification (Annexure -1).

In addition, the supplier shall ensure to enclose one copy of the test certificate alongwith their dispatch documents to facilitate quick clearance of the material.

The following details shall be furnished in the test certificate:

1. Dimensional inspection
2. Detail of heat treatment
3. Hardness value
4. NDT
5. Optional tests called for in the drawing/order.

18.0 PACKING AND MARKING

Castings shall be suitably packed to prevent corrosion and damage during transit. Machined surfaces shall be properly protected with anticorrosive compounds. Each package or casting (when supplied separately) shall be legibly marked with the following information.

AA 19703: Grey Iron Castings-Gr: FG 260
BHEL Order No.
Consignment/Identification No.
Melt No.
Weight
Supplier's Name

19.0 REFERRED STANDARDS (Latest Publications Including Amendments):

1. IS: 210 2. IS:1500 3. IS:1608 4. AA 023 04 02

4. AA 085 01 33 5. AA 085 01 34

ANNEXURE 1 - RECOMMENDED TEST CERTIFICATE FORMAT FOR CASTING

SUPPLIERS'S NAME AND ADDRESS

1. Customer :
2. TC No. & Date :
3. PO No. :
4. Process of Melting :
5. Deoxidisation Process
6. Cast No. & Date :
7. Batch No. :
8. Heat Code :
9. Spec., No. :
10. Test Bar Size

11. CASTING COVERED BY T.C.

Sl. No.	Drawing No. & Item No.	Description	Quantity & Weight

12. CHEMICAL COMPOSITION (PERCENT)

Element	C	Si	Mn	S	P										
As per Spec. Min.															
As per Spec. Max..															
Actual Values.															

13. HEAT TREATMENT
(To be accompanied by Recorder Chart, wherever called for)

Condition	Temp.°C	Soaking Time, Hrs..	Cooling Medium

14. MECHANICAL PROPERTIES

	T.S. N/mm2	Y.S. 0.5/0.2% Proof N/mm2	% E on GL 5.65 SO	% R.A. Min	Hardness BHN Min. 3 Values	Impact Value, Joules	Bend	
As per Spec. Min.								
As per Spec. Max.								
Actual Values.								

15. Surface Finish (When called for in the order/drg)	
16. DIMENSIONAL INSPECTION	

17.NON-DESTRUCTIVE TESTS

Nature of Test	Acceptance Level	Instrument used	Range	Results	Any other details
Ultrasonic					
Radiographic					
Dye Penetrant/ Magnetic Particle					

18. OTHER TESTS, IF ANY (MICRO-Scopic, Hydraulic, Etc.)	
19. IDENTIFICATION ON CASTING AS PER CPS.	

We hereby certify that the items mentioned above have been tested and inspected in our presence and are found to be in accordance with the drawings, specifications and purchase order.

Signature & Seal of the Inspecting Officer
(Purchase Representative)

Date :

Signature and Seal of the Chief of Quality Control
Chief Metallurgist of the Supplier.

Date :

INSTRUCTION:

a) If steel is produced by LD or Oxygen process, Nitrogen content should be furnished and shall not exceed 0.009%
b) Test Certificates are to be furnished as per Purchase Order and Specifications, in A4 Size transparent paper.
c) All the entries including signature should be in black ink.
d) If testing is done by outside agencies, the original TCs shall be furnished.
e) The actual Test Certificate may run into more than one A4 size paper, if needed, to facilitate filling up of details.

ANNEXURE--RC-LOT-BA17

S.No	MaterialCode	Description	Qty(Nos)	LOT
1	RV1970100010*	M.S.B.LINER (HY-19.01) - FULLY M/CD GCI CASTING AS PER DRG. 36127600046/04 WITH MATL AS PER SPECN. AA19702/06	12	12
2	RV1970100133	TRUNNION BUSHING RETAINER- T.E. (HY-95.00) - FULLY M/CD GCI CASTING AS PER DRG. 36137600064/02 WITH MATL AS PER SPECN. AA19702/06	175	50
3	RV1970100257	STAR WHEEL (HY-4.06) - FULLY M/CD GCI CASTING AS PER DRG. 46137600096/03 WITH MATL AS PER SPECN. AA19702/06	50	55
4	RV1970100478	INSPECTION HOLE COVER (HY-167.1.10) - FULLY M/CD GCI CASTING AS PER DRG. 36148000347/02 WITH MATL AS PER SPECN. AA19702/06	75	25
5	RV1970100494	M.S.B.LINER VAR-01 (HY-305.01) - FULLY M/CD ITEM AS PER DRG. 26120000404/04 WITH MATL. AS PER SPECN. AA19702/06	60	25
6	RV1970100524	M.S.B.LINER VAR-01 (HY-305.02) - FULLY M/CD ITEM AS PER DRG. 26120000408/04 WITH MATL. AS PER SPECN. AA19702/06	55	25
7	RV1970100532	M.S.B.LINER 'VAR-01' (HY-305.03) - FULLY M/CD GCI CASTING AS PER DRG. 26120000397/04 WITH MATL AS PER SPECN. AA19702/06	50	25
8	RV1970100559	M.S.B.LINER 'VAR-01' (HY-305.04) - FULLY M/CD GCI CASTING AS PER DRG. 26120000399/04 WITH MATL AS PER SPECN. AA19702/06	60	30
9	RV1970100575	M.S.B.LINER 'VAR-03' (HY-305.05) - FULLY M/CD GCI CASTING AS PER DRG. 26120000397/04 WITH MATL AS PER SPECN. AA19702/06	60	30
10	RV1970100591	MILL SIDE INSP. DOOR (HY-209.01) FULLY M/CD GCI CASTING AS PER DRG. 36127600042/06 WITH MATL AS PER SPECN. AA19702/06	18	18
11	RV1970101091	T.S.END CAP - FE (HY-903.03) - FULLY M/CD GCI CASTING AS PER DRG. 16108801034/03 WITH MATL. AS PER SPECN. AA19702/06	30	15
12	RV1970101105	TS END CAP -TE (HY-903.10) - FULLY M/CD GCI CASTING AS PER DRG. 16108801035/03 WITH MATL. AS PER SPECN. AA19702/06	26	15
13	RV1970101156	INSPECTION HOLE COVER (HY-960.01.A.10) - FULLY M/CD GCI CASTING AS PER DRG. 46149600358/02 WITH MATL AS PER SPECN. AA19702/06	85	30
14	RV1970101164	INSPECTION HOLE COVER (HY-390.08) - FULLY M/CD CASTING AS PER DRG. 36139600231/01 WITH MATL AS PER SPECN. AA19702/06	12	12
15	RV1970101245	M.S.B.LINER SET (HY-019.C) - FULLY M/CD CASTINGS AS PER DRG. HY-019.C WITH MATL AS PER SPECN. AA19702/06	30	10

16	RV1970200014	LOWER BRG & PUMP HSG (HY-23.0) - FULLY M/CD GCI CASTING AS PER DRG. NO. 16117600083/04 WITH MATL AS PER SPECN. AA19703/06	35	15
17	RV1970200073	SEP.BOTTOM LINER (VAR.03) (HY-029.03) FULLY M/CD GCI CASTING AS PER DRG. NO.36137600084/05 WITH MATL. AS PER SPECN. AA19703/06	15	10
18	RV1970200081	UPPER JOURNAL HOUSING (HY-36.0) - FULLY M/CD GCI CASTING AS PER DRG. 26137690004/08 WITH MATL AS PER SPECN. AA19703/06	250	50
19	RV1970200090*	TRUNNION SHAFT END CAP (TE) (HY-38.00) - FULLY M/CD GCI CASTING AS PER DRG. 16137600018/04 WITH MATL AS PER SPECN. AA19703/06	100	25
20	RV1970200170	UPPER JOURNAL HSG.(HY-65.0) - FULLY M/CD GCI CASTING AS PER DRG. 36036000109/07 WITH MATL AS PER SPECN. AA19703/06	45	20
21	RV1970200197	OIL COLLECTOR (HY-74.0) - FULLY M/CD OIL COLLECTOR AS PER DRG. 36117600012/05 WITH MATL AS PER SPECN. AA19703/06	15	15
22	RV1970200219	THRUST BRG. HSG. CAP (HY-82.0) - FULLY M/CD GCI CASTING AS PER DRG. 36117600006/07 WITH MATL AS PER SPECN. AA19703/06	21	10
23	RV1970200227	TRUNNION SHAFT END CAP (FE) (HY-93.00) - FULLY M/CD GCI CASTING AS PER DRG. 16137600019/04 WITH MATL AS PER SPECN. AA19703/06	108	25
24	RV1970200251	THRUST BEARING HOUSING (HY-148.0) - FULLY M/CD GCI CASTING AS PER DRG. 36117600005/08 WITH MATL AS PER SPECN. AA19703/06	28	20
25	RV1970200303	LOWER BRG.& PUMP HOUSING COVER (HY-150.00) - FULLY M/CD GCI CASTING AS PER DRG. 26117600001/09 WITH MATL AS PER SPECN. AA19703/06	15	15
26	RV1970200324	UPPER BRG.HSG.(HY-158.0) - FULLY M/CD GCI CASTING AS PER DRG. 36117600023/03 WITH MATL AS PER SPECN. AA19703/06	15	15
27	RV1970200340	RADIAL BRG.HSG. (HY-168.0) - FULLY M/CD GCI CASTING AS PER DRG. 26117600006/09 WITH MATL AS PER SPECN. AA19703/06	30	15
28	RV1970200430*	UPPER BRG. HSG. - TIGHT FIT (HY-158.A) - FULLY M/CD GCI CASTING AS PER DRG. 26118090077/05 WITH MATL AS PER SPECN. AA19703/06	20	10
29	RV1970200456	TRAMP IRON SPOUT BODY (HY-182.01) FULLY M/CD GCI CASTING AS PER DRG. 16157600029/03 WITH MATL AS PER SPECN. AA19703/06	11	10
30	RV1970200464	TRAMP SPOUT ADAPTOR (HY-182.02) - FULLY M/CD GCI CASTING AS PER DRG. 26157600057/03 WITH MATL AS PER SPECN. AA19703/06	10	10
31	RV1970200599	SEP.ACCESS DOOR (HY-171.C.10) - FULLY M/CD GCI CASTING AS PER DRG. 36137600060/05 WITH MATL AS PER SPECN. AA19703/06	40	20

32	RV1970200715	TRANISITION PIECE (TY-342.00) FULLY M/CD ITEM AS PER DRG 24720000123/02 WITH MATL AS PER SPECN. AA19703/06	16	10
33	RV1970200723	TRUNION BUSH. RET. (HY-311.A.39) - FULLY M/CD GCI CASTING AS PER DRG. 36100000523/01 WITH MATL AS PER SPECN. AA19703/06	250	50
34	RV1970200839	TRAMP IRON SPOUT BODY (HY-350.01) - FULLY M/CD GCI CASTING AS PER DRG. 26110000566/05 WITH MATL AS PER SPECN. AA19703/06	96	25
35	RV1970200898	T.S.END CAP-FE 'VAR-02' (HY-313.05.A) - FULLY M/CD GCI CASTING AS PER DRG. 16100000256/06 WITH MATL AS PER SPECN. AA19703/06 (WITH METRIC THREAD)	100	20
36	RV1970200906	T.S.END CAP-TE 'VAR-01' (HY-313.04) - FULLY M/CD GCI CASTING AS PER DRG. 16100000257/05 WITH MATL AS PER SPECN. AA19703/06	20	12
37	RV1970200914	T.S.END CAP-FE 'VAR-01' (HY-313.05) - FULLY M/CD GCI CASTING AS PER DRG. 16100000256/06 WITH MATL AS PER SPECN. AA19703/06	20	12
38	RV1970200922	T.S.END CAP-TE 'VAR-02' (HY-313.04.A) - FULLY M/CD GCI CASTING AS PER DRG. 16100000257/05 WITH MATL AS PER SPECN. AA19703/06 (WITH METRIC THREAD)	76	25
39	RV1970200973	T.S. END CAP - THRUST END (HY-1102.03) - FULLY M/CD GCI CASTING AS AS PER DRG. 16100401191/02 WITH MATL AS PER SPECN. AA19703/06	21	10
40	RV1970200981	FULLY MACHINED T.S.END CAP -FREE END (HY-1102.10) AS AS PER DRG. 16100401192/01 WITH MATL. AS PER SPECN. AA19703/06	25	15
41	RV1970200990*	FULLY MACHINED TRUNION BUSHING RETAINER (HY-1102.09) AS AS PER DRG. 36100402324/01 WITH MATL AS PER SPECN. AA19703/06	60	20
42	RV1970205130*	UPPER SKIRT ASSY (HY-24.0) - FULLY M/CD & ASSEMBLED GCI CASTING AS PER DRG. 26117600022/05 WITH MATL AS PER SPECN. AA19703/06	25	10
43	RV1970100028	M.S.B.LINER (HY-19.02) - FULLY M/CD GCI CASTING AS PER DRG. 36127600049/05 WITH MATL. AS PER SPECN. AA19702/06	15	15
44	RV1970100036	M.S.B.LINER (HY-19.03) - FULLY M/CD GCI CASTING AS PER DRG. 36127600051/04 WITH MATL AS PER SPECN. AA19702/06	15	15
45	RV1970100044	M.S.B.LINER 'VAR-01' (HY-19.04) - FULLY M/CD GCI CASTING AS PER DRG. NO. 36127600050/06 WITH MATL. AS PER SPECN. AA19702/06	15	15
			2310	

RST ANGLE PROJECTION

ALL DIMENSIONS ARE IN mm.

REV.	DATE	ALTERED	REV.	DATE	ALTERED	REV.	DATE	ALTERED
		CHECKED			CHECKED			CHECKED
		APPROVED			APPROVED			APPROVED

DESCRIPTION	S.NO.	DRAWING NO.	MATL. CODE / MATL. SPECN.	UNIT WT.(Kg.) / QTY.
M.S.B.LINER ST.03 HY-19.06	4	3-61-276-00050	AA19702	39.32 / 1
M.S.B.LINER HY-19.03	3	3-61-276-00051	AA19702	32.28 / 1
M.S.B.LINER HY-19.02	2	3-61-276-00049	AA19702	25.02 / 1
M.S.B. LINER HY-19.01	1	3-61-276-00046	AA19702	42.38 / 6

TYPE OF PRODUCT OR NAME OF CUSTOMER/PROJECT

BHARAT HEAVY ELECTRICALS LTD.
VARANASI

	NAME	SIGN	DATE
DRN.	D.BASAK		20.12.07
CKD.	S.TEWARI		20.12.07
APPD.	V.KUMAR		20.12.07

NO.OF VAR.

DEPT. P&D

CODE

NTS

WEIGHT(K.G.)

REF.TO ASSY.DRG.

ITEM NO.

NO.OF ITEM

TITLE

M.S.B. LINERS SET

DRAWING NO. HY-019.C

REV. 00

SHT.NO. 01 NO.OF SHT. 01

REF. TO HY0230261 FOR UNSPECIFIED TOLERANCES.

SIGN. & DATE

INVENTORY NO.

REF. DRG. NO. | CON. | ER NO.

THE INFORMATION ON THIS DOCUMENT IS THE PROPERTY OF BHARAT HEAVY ELECTRICALS LIMITED. IT MUST NOT BE USED DIRECTLY OR INDIRECTLY IN ANY WAY DETRIMENTAL TO THE INTEREST OF THE COMPANY.

CONFIDENTIAL

B.H.E.L. H.E.R.P. VARANASI

QUALITY PLAN

AA-19703 G.C.I.Gr.25 - Fully Machined

Sl.No.	Component/Operation	Characteristic Checked	Type/Method of Check	Extent of Check	Reference Documents	Acceptence Norm	Format of Record	Agency P	Agency W	Agency V	Remarks
1.0	Casting	i. Composition	Chemical Analysis	1 Sample per melt	Tech.Specn. AA19703	Tech.Specn. AA19703	T.C.	3	-	2	
		ii. Heat Treatment	H.T.Chart	1 Sample per H.T.batch	-do-	-do-	H.T.Chart	3	-	2	
		iii.Mechanical Properties	Mechanical Test	-do-	-do-	-do-	T.C.	3	-	2	
		iv. Surface Defects	Visual	100%	Free from Defects	Free from Defects	Inspection Report	3	2	-	
		v. Dimensions	Measurement	100% by VEND Random 10% by BHEL	Drawing	Drawing	Dimensional Report	3/2	-	2	
2.0	In Process (After machining)	i. Dimensions	Measurement	100% by VEND Random 10% by BHEL	Drawing	Drawing	Dimensional Report	3/2	-	2	
		ii. Tapped Holes check	with Plug Guage	100%	----	----	--do--	3/2	-	2	
3.0	Final Inspection	i. Cleanliness	Visual	100%	----	----	Inspection Report	3	2	-	
		ii. Identification & Marking	Punching Heat No Po.No.,Drg.No.& Inspector Seal	100%	----	----	Inspection Report	3	2	-	
		iii.Prevention (from rust)	Visual	100%	----	----	--do--	3	2	-	

Q.P.No	RV/C&F/09	Approved By	S.C.RAI
DATE	18/05/94	Signature & Date	H.S. PANDEY MANAGER (P & T) BHEL-HERP VARANASI
PageNo	1 of 1	BHEL	

LEGEND :
P = PERFORM
W = WITNESS
V = VERIFY
3 = VENDOR/SUPPLIER
2 = BHEL

TC = TEST CERTIFICATE

HT = HEAT TREATMENT

B.H.E.L. H.E.R.P. VARANASI

QUALITY PLAN

AA-19702 G.C.I. Gr. 20 FULLY MACHINED

Sl.No.	Component/Operation	Characteristic Checked	Type/Method of Check	Extent of Check	Reference Documents	Acceptence Norm	Format of Record	Agency P	Agency W	Agency V	Remarks
1.0	Casting	i. Composition	Chemical Analysis	1 Sample per melt	Tech.Specn. AA19702	Tech.Specn. AA19702	T.C.	3	-	2	
		ii. Heat Treatment	H.T.Chart	1 Sample per melt	-do-	-do-	H.T.Chart	3	-	2	
		iii. Mechanical Properties	Mechanical Test	-do-	-do-	-do-	T.C.	3	-	2	
		iv. Surface Defects	Visual	100%	Free from defects	Free from defects	Inspection Report	3	2	-	
		v. Dimensions	Measurement	100% by VEND Random 10% by BHEL	Drawings	Drawings	Dimensional Report	3/2	-	2	
2.0	In Process (After machining)	i. Dimensions	Measurement	100% by VEND Random 10% by BHEL	Drawings	Drawings	-do-	3/2	-	2	
		ii. Tapped Holes Check	with plug gauge	100%	---	---	-do-	3/2	-	2	
3.0	Final Inspection	i. Cleanliness	Visual	100%	---	---	Inspection Report	3	2	-	
		ii. Identification & Marking	Punching Heat No Po.No.,Drg.No.& Inspector Seal	100%	---	---	-do-	3	2	-	
		iii. Prevention (from rast)	Visual	100%	---	---	-do-	3	2	-	

Q.P.No	RV/C&F/12	Approved By	S.C.RAI
DATE	20/05/94	Signature & Date	
PageNo	1 of 1	BHEL	

LEGEND :
P = PERFORM
W = WITNESS
V = VERIFY
3 = VENDOR/SUPPLIER
2 = BHEL

TC = TEST CERTIFICATE
HT = HEAT TREATMENT

B. P. Singh
Sr. Manager (P & D)
B. H. E. L. – H. E. R. P.
Shivpur, Vara

BHARAT HEAVY ELECTRICALS LIMITED

Ramachandrapuram, Hyderabad – 502 032, INDIA

QW – 482 WELDING PROCEDURE SPECIFICATION (WPS)

Welding Procedure Specification No.: WE006 **Date: 02.08.86** **Supporting PQR No.:** 516, **Dt** : 11.05.10

Revision No.: 07 **Date:** 24.04.2016

Welding Process (es) : *SMAW* **Type (s) :** *MANUAL*

JOINTS (QW 402)

Joint Design: *As per manufacturing drawing (groove/fillet)*

Root Spacing : *As per manufacturing drawing*

Backing (Yes) : *for double side butt welds and backing strip joints*

(No) : *for single side welds*

Backing Material (Type) : *Base metal / Weld metal*

Metal: *Yes* **Non-Fusing Metal**: *No*

Retainer: *No*

BASE METALS (QW – 403)

P. No. *: 1* **Group No. :** *1 & 2* **TO** **P. No.:** *1* **Group No.:** *1 & 2*

OR

Specification type & grade: -------- **to** Specification type & grade : -------

OR

Chemical Analysis & Mechanical Properties: --- to Chemical Analysis & Mechanical Properties: ----

Thickness Range :

Base Metal : **Groove:** *5.0 mm to 38 mm* ** **Fillet :** *all sizes*

Deposited pass thickness > 13mm – Not Permitted

Other : None

Filler Metals (QW – 404)

	SMAW
Spec. No. (SFA)	*5.1*
AWS NO (CLASS)	A5.1 (*E 7018*)
F. No.	4
A. No.	*1*
Size of Filler Metals	*Dia 2.5, 3.15, 4.0, 5.0mm*
Filler Metal Product Form	N.A
Supplemental Filler Metal	N.A
Deposited Weld Metal Thickness Range : Groove: Fillet:	38 *mm Max.* *38 mm Max Throat*
Electrode Flux (Class)	*Basic*
Consumable Insert	*No*
Max. Bead Thickness	5 *mm*

** Note : For Unequal thicknesses base material thickness qualified upto 50mm and weld metal thickness limited to 38mm max.

Rev : 07 – Note added regarding base material thickness

N.A – Not Applicable

POSITIONS (QW-405)

Position(s) Groove : *ALL POSITIONS*
Welding Progression: *UP for Vertical*
Down –Not permitted
Position (s) Fillet: *ALL*
Other : None

POSTWELD HEAT TREATMENT (QW-407)

Not Permitted

Temperature Range: *NA*

Time Range: *NA*
Other : *None*

PREHEAT (QW-406)

Preheat Temp Min: *10 º C min for < 31mm*
100 º C min for 31mm and above
Interpass Temp Max: *300 º C*
Preheat Maintenance: *Minimum specified temperature for every restart*
Other : None

GAS (QW - 408)

	Percentage Composition		
	Gas(es)	**Mixture**	**Flow Rate**
Shielding :	N.A	-	-
Trailing :	N.A	-	-
Backing :	N.A	-	-

Other : None

ELECTRICAL CHARACTERISTICS (QW-409)

Weld Pass (es)	Process	Filler Metal		Current type & Polarity	Amps (Range)	Wire feed speed	Energy or Power (Range)	Volts (Range)	Travel speed	Other
		Classifi-cation	Diam-eter							
Root& Subs-equent as requi-red	*SMAW*	*E 7018*	*2.5mm*	*DCEP*	*60 – 90A*	N.A	N.A	*22-34V*	N.A	*String for horizontal; Others Weave (Max 3 times Electrode Core Dia)*
	-do-	*-do-*	*3.15mm*	*-do-*	*100-150A*	*-do-*	*-do-*	*-do-*	*-do-*	
	-do-	*-do-*	*4.0mm*	*-do-*	*150-200A*	*-do-*	*-do-*	*-do-*	*-do-*	
		-do-	*5.0mm*	*-do-*	*200-260A*	*-do-*	*-do-*	*-do-*	*-do-*	

Pulsing Current : *N.A*

Heat Input : *N.A*

Tungsten Electrode Size and Type : *N.A*

Mode of Metal Transfer for GMAW (FCAW): *N.A*

Others **:** None

TECHNIQUE (QW-410)

String or Weave Bead: *string and/or weave*

Orifice or Gas Cup Size : *N.A*

Initial / Interpass Cleaning : *chipping / brushing / grinding*

Method of Back Gouging: *grinding/gouging if required*

Oscillation *:* *N.A*

Contact tube to work distance : N.A

Multiple or Single Pass : *Multiple pass*

Multiple or Single Electrodes : *Single electrode*

Closed to out chamber : *N.A*

Peening : *Not allowed*

Use of thermal processes : *N.A*

Other : *Clean weld area to remove oil, rust, grease, etc. prior to welding.*

Prepared by

Approved by

Welding Engineer

HEAD / Welding Engg

N.A – Not Applicable