गोपनीय एवं अधिकार सुरक्षित इस प्रपत्र पर दी गई जानकारी भारत हेवी इलेक्ट्रिकल्स लिमिटेड की संपत्ति है इसे प्रत्यक्ष या अप्रत्यक्ष रूप से कम्पनी के हितों को नुकसान पहुँचाने के लिए कदापि उपयोग नही किया जावे.

SPECIFICATION FOR COLD ROLLED NON-GRAIN ORIENTED SHEET STEEL GRADE – 235-35A, 270-35A, 270-50A, 290-50A, 350-50A, 600-65A

1.0 GENERAL:

This specification governs the technical & quality requirements of insulated (double side) & Un-Insulated cold rolled, non-grain oriented magnetic steel sheet or coil in finally annealed condition in 0.35 , 0.5 , 0.65 thicknesses.

2.0 APPLICATION:

Stator Laminations of Hydrogenerators.

3.0 Condition of Delivery:

3.1 Cold rolled, finally annealed.

3.2 The material shall be supplied in straight lengths (sheet form) or in coils, to the ordered thickness as specified in BHEL order

3.3 Magnetic steel sheets or coils shall be supplied with or without insulation coating, as detailed below, and as called for on BHEL order.

a) 0.35 mm , 0.5 mm thick - Insulated:*

Both side insulated with an average of 5 ± 1.5 micron thickness coating on each side with varnish as per BHEL specification AA27541. The Insulation thickness of any individual point shall lie between 3.5 to 9 microns & points shall be uniformly distributed.

b) 0.65 mm Thick - Uninsulated:

Un-insulated, protected on both sides by rust preventive oil coating.

***Note**:

(i) The supplier shall furnish the details of such coatings alongwith the quotation (For insulation coating, these details shall be furnished as per Annexure-1 of BHEL standard AA 0851711) for approval of BHEL prior to the first time supply and/or as when the type of coating is changed subsequently with the prior approval of BHEL.

(ii) The surface finish of the material shall be such as to allow subsequent uniform varnishing, without any problem.

गोपनीय एवं अधिकार सुरक्षित इस प्रपत्रा पर दी गई जानकारी भारत हेवी इलेक्ट्रिकल्स लिमिटेड की संम्पत्ति है इसे प्रत्यक्ष या अप्रत्यक्ष रू से कम्पनी के हितो को नुकसान पहुँचाने के लिए कदापि उपयोग नही किया जावे.

3.4 Type Of Insulation Coating:

The insulation coating used for the insulated steel sheets referred in clause 3.3 (a) above shall be uniformly applied, tightly adherent and shall be as per BHEL specification AA 27541 or as per AISI, C-6 of the filler base type on both sides, pigmented varnish coating (in which case it shall be compatible to varnish as per AA 27541) and shall meet the requirements detailed in Clause 8.6.

Supplier to inform the Type, Grade & Source of actual varnish used to confirm the compatibility with BHEL varnish system.

4.0 COMPLIANCE WITH NATIONAL STANDARDS:

Material shall comply with the requirements of the national standards as given in following table-1 and also meet the requirements of this specification. Material offered to IEC or DIN as per following table-1 is also acceptable.

TABLE-1 COMPLIANCE WITH OTHER STANDARDS

S. No.	BHEL Specification	Equivalent material as per IS 648	Equivalent material as per IEC 60404-8-4	Equivalent material as per DIN EN10106
1	235-35A	---	M235-35A *	M235-35A
2	270-35A	35C270	M270-35A*	M270-35A
3	270-50A	50C270	M270-50A *	M270-50A
4	290-50A	50C290	M290-50A *	M290-50A
5	350-50A	50C350	M350-50A *	M350-50A
6	600-65A	65C600	M600-65A *	M600-65A

* - 5 FOR 50 Hz and 6 for 60 Hz

5.0 DIMENSIONS AND TOLERANCES:

5.1 Sizes:

Magnetic steel sheet shall be supplied to the dimensions and coatings specified on BHEL order.

5.2 Tolerances:

5.2.1 Thickness:

The permissible deviation in nominal thickness shall be ± 8%. The variation in thickness in a direction parallel to the direction of rolling shall not exceed ± 8% of the nominal thickness.

The variation in thickness in a direction perpendicular to the direction of rolling shall be ± 0.020 mm for nominal thickness of 0.5 & 0.35 mm and ± 0.030 mm for 0.65mm thick. The measuring points should be at least 40 mm away from the edges of the sheets.

गोपनीय एवं अधिकार सुरक्षित इस प्रपत्रा पर दी गई जानकारी भारत हेवी इलेक्ट्रिकल्स लिमिटेड की संम्पत्ति है इसे प्रत्यक्ष या अप्रत्यक्ष रू से कम्पनी के हितो को नुकसान पहुँचाने के लिए कदापि उपयोग नही किया जावे.

5.2.2 Width:

The tolerance for width of material supplied with trimmed edges shall be as follows.

TABLE-2 Tolerance for width of material

Width (mm)		Tolerance (mm)	
Over	Up to & included	+ (plus)	- (Minus)
-	150	0.3	0
150	500	0.5	0
500	1250	1.5	0

5.2.3 Length:

When supplied in sheet form, the tolerance on length shall be + 1%, but shall not exceed + 10 mm/ - 0 mm.

5.2.4 Straightness/Edge Camber:

The straightness tolerances for the longitudinal edge (edge camber "C") over a gauge length of 2000 mm shall not exceed 4 mm for width "W" upto and including 150 mm and 2 mm for widths exceeding 150 mm.

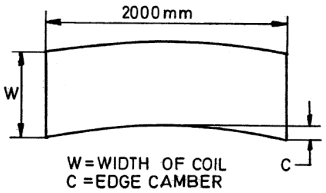

5.2.5 Edge Burr:

The height of edge burr shall not exceed 50 microns.

5.2.6 Bowing - Coils:

The material when unwound from a coil shall be placed flat on a level smooth surface (surface plate) such that it has a radius not less than 3000 mm. The specimen should be stood upright and free from constraint with one longitudinal edge on the surface of the plate. A straight edge with a length of 500 mm, when placed against the specimen and when measuring the greatest distance 'h' between the straight edge and the product should not be more than 10 mm as detailed below:

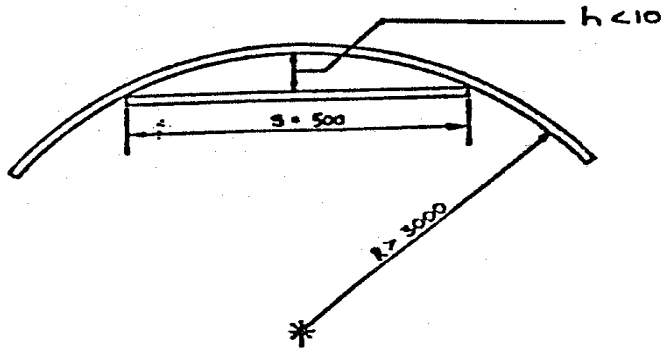

5.2.7 Waviness/Flatness

The Waviness/Flatness shall not exceed 1.5% (i.e the ratio of the wave height to wave length).

गोपनीय एवं अधिकार सुरक्षित इस प्रपत्र पर दी गई जानकारी भारत हेवी इलेक्ट्रिकल्स लिमिटेड की संम्पत्ति है इसे प्रत्यक्ष या अप्रत्यक्ष रू से कम्पनी के हितो को नुकसान पहुँचाने के लिए कदापि उपयोग नही किया जावे.

6.0 FINISH:

The material shall have a smooth surface and shall be free from loose scale, buckle or dents, waviness and internal stresses.

7.0 TEST SAMPLES:

The test samples of the same heat/melt & thickness shall be selected from the consignment as follows:

Upto 30 tonnes : 1 sample

Above 30 to 60 tonnes : 2 samples

Above 60 tonnes : 3 samples

The test samples shall be sufficient in size to provide the necessary test pieces.

8.0 PROPERTIES (AS RECEIVED):

Table 3 – Technological properties and magnetic properties

S. No.	Grade	Thickness (mm)	Maximum Total Specific Loss (W/Kg) (For 50 Hz)		Minimum magnetic polarization a in an alternating magnetic field for a magnetic field strength (Tesla)			Maximum Anisotrophy of losses (%)	Minimum Stacking Factor / No. of test pieces for stacking factor	No. of Bends	Density Kg/dm^2 (Informative)
			1.0 Tesla (Informative)	1.5 Tesla (Guaranteed)	2500 A/m	5000 A/m	10000 A/m				
1	235-35A	0.35	0.95	2.35	1.49	1.6	1.7	±17	0.93 / 20	2	7.60
2	270-35A	0.35	1.1	2.7	1.49	1.6	1.7	±17	0.93 / 20	2	7.65
3	270-50A	0.50	1.10	2.70	1.49	1.6	1.7	±17	0.95 / 16	2	7.60
4	290-50A	0.50	1.15	2.9	1.49	1.6	1.7	±17	0.95 / 16	2	7.60
5	350-50A	0.50	1.50	3.50	1.5	1.6	1.7	±12	0.95 / 16	5	7.65
6 #	600-65A	0.65	2.60	6.0	1.56	1.66	1.76	±10	0.97 / 16	10	7.75

NOTE :

1- Item at S. No. 6 marked with (#) shall be used for Spacer plate only.

2- For Total specific loss for 60 Hz machines IEC 60404-8-4 Table-1 shall be referred.

गोपनीय एवं अधिकार सुरक्षित इस प्रपत्रा पर दी गई जानकारी भारत हेवी इलेक्ट्रिकल्स लिमिटेड की संम्पत्ति है इसे प्रत्यक्ष या अप्रत्यक्ष रू से कम्पनी के हितो को नुकसान पहुँचाने के लिए कदापि उपयोग नही किया जावे.

8.1 Bend Test:

When tested to IS 649/IEC 60404-8-4, test piece shall withstand minimum number of bends, as specified in Table-3, without fracture, through 180 degrees over a 5 mm radiused jaws.

8.2 Stacking Factor:

The surface quality of the sheets when measured in terms of stacking factor as per IS 649 / IEC 60404-8-4 for 0.35mm/0.5mm thick double side coating (insulated) and 0.65 mm thick uninsulated steel sheet shall give values as mentioned in Table-3.

8.3 Total Specific Loss:

The total specific loss on aged specimens (a specimen which has been heated for 24 hours at 225 ±3 ^{0}C) shall be as per Table-3, when tested as per IS:649 / IEC 60404-2.

8.4 AC Magnetisation:

When tested to IS 649 / IEC 60404-2, the AC magnetic field (H) in Ampere/metre (Peak), shall show minimum corresponding values of magnetic induction (B) in Tesla (Peak) as per Table-3.

8.5 Anisotrophy of Losses:

When tested to IS 649 / IEC 60404-8-4 as detailed below, the Anisotrophy of losses shall not exceed the values mentioned in Table-3.

To determine the loss ANISOTROPHY the specific total loss at 1.5T & 50 Hz should be measured separately on specimens taken parallel and perpendicular to the rolling direction. The loss Anisotrophy, in percent, is found from the following expression:

$$\frac{Pq - P1}{Pq + P1} \times 100 \text{ where,}$$

Pq denotes specific total losses perpendicular to the rolling direction.

P1 denotes the specific total losses parallel to the rolling direction.

गोपनीय एवं अधिकार सुरक्षित इस प्रपत्र पर दी गई जानकारी भारत हेवी इलेक्ट्रिकल्स लिमिटेड की संम्पत्ति है इसे प्रत्यक्ष या अप्रत्यक्ष रू से कम्पनी के हितो को नुकसान पहुँचाने के लिए कदापि उपयोग नही किया जावे.

8.6 Testing Of Insulation Coating:

The insulation coating when tested with BHEL standard AA0851711 : Test methods for insulation coating on magnetic steal sheets, shall show the following properties :

8.6.1 Selection Of Test Samples For Insulation Coating:

The outermost and innermost turn of coil or the top-most and bottom-most of a stack of sheets, shall be considered as wrapping and not representing the properties of the remaining material and hence shall not be considered for test specimen.

In case of coils, the test specimens shall preferably taken from the first external turn excluding the wrapping turn and in case of sheet, it shall be from the upper part of the stack. In special case, it can be taken from any other part also.

The test specimen shall extend over the entire sheet width and can be about 350 ± 2 mm long. In case of sheet width, below 400 mm, the specimen shall be 500 ± 2mm long.

The surface of the strip shall be free from contaminations and damages and shall be cut without deformation and as far as possible, without burrs. Any cleaning done shall not damage the insulation coating.

8.6.2 Coating Layer Thickness:

Both sides of the sheet shall be coated and shall have average thickness of 5 ± 1.5 micron on each side. At least 15 readings shall be taken on each side at equal intervals. 80% of the readings shall lie between the above specified values.

8.6.3 Surface Insulation Resistivity:

When tested as per ASTM, A 717 - Franklin's Method, at a pressure of 2 N/mm^2, at room temperature. The minimum average of 10 non-overlapping resistance measurements (5 on each side) shall be 30 $Ohm\text{-}cm^2$ with a minimum allowable individual value of 10 $Ohm\text{-}cm^2$.

NOTE : Any other method is also acceptable with approval of BHEL.

8.6.4 Type Tests*:

8.6.4.1 Adherence Test:

The surface coating shall be sufficiently adherent so that it does not get detached during insulation and shearing. In the reverse bending test with a bending radius of 5 mm, the surface coating shall not be detached after bending through 90^0.

गोपनीय एवं अधिकार सुरक्षित इस प्रपत्र पर दी गई जानकारी भारत हेवी इलेक्ट्रिकल्स लिमिटेड की सम्पत्ति है इसे प्रत्यक्ष या अप्रत्यक्ष रूप से कम्पनी के हितो को नुकसान पहुँचाने के लिए कदापि उपयोग नही किया जावे.

8.6.4.2 Thermal Effect On Coating:

Twelve specimens of the coated strip shall be clamped together under a pressure of 1 N/mm^2 approximately and heated in a laboratory oven at a temperature of $150 \pm 3\ ^0C$ for a period of 7 days. After cooling to room temperature, the surface insulation resistivity values of the middle ten specimens shall not be less than the minimum specified values mentioned in cl.8.6.3.

8.6.4.3 Resistance To Solvents & Oils :

The specimens shall be kept in a container filled with any of the following solvents/oil and boiled for 5 minutes. After removal and cooling to the room temperature, the coating shall not get soft enough so that it can be wiped off. The insulation film shall be resistant to conventional organic solvents like trichloroethylene, methylated spirit, acetone, benzene, etc. and oil . In special cases and when specified on BHEL order, the insulating film shall be resistant to ammonia also.

***Note:**

'Type tests', shall be carried out when, 'Type Approval', to a supplier is given & repeated once in 5 years for the approved supplier.

9.0 TEST CERTIFICATES:

Three copies of Test Certificates shall be supplied unless otherwise specified on order. In addition, the supplier shall ensure to enclose one copy of the Test Certificate along with their despatch documents to facilitate quick clearance of the material.

The test certificate shall bear the following information:

HG-10062; Gr: (As per BHEL Order), BHEL Order No, Suppliers Name & Grade/ Identification No, Size & Weight, Melt No., Packet/Bundle No. Test Results of Dimensions & Tolerances, Properties as per the concerned National Standard & Insulation Coating, as above. Also type test certificates, not older than 5 years, shall be submitted along with each consignment.
Loss curve, magnetization curve catalogue of specified grade shall be submitted.

10.0 PACKING AND MARKING:

10.1 Material Supplied In Straight Length (sheet) :

Magnetic steel sheets shall be supplied in bundles. The packing shall be seaworthy and shall protect the material from damage during transit. A typical packing which would be suitable is shown below.

Each sheet shall be marked with supplier's grade/references.

These markings shall be along the rolling direction.

गोपनीय एवं अधिकार सुरक्षित इस प्रपत्र पर दी गई जानकारी भारत हेवी इलेक्ट्रिकल्स लिमिटेड की संम्पत्ति है इसे प्रत्यक्ष या अप्रत्यक्ष रू से कम्पनी के हितो को नुकसान पहुँचाने के लिए कदापि उपयोग नही किया जावे.

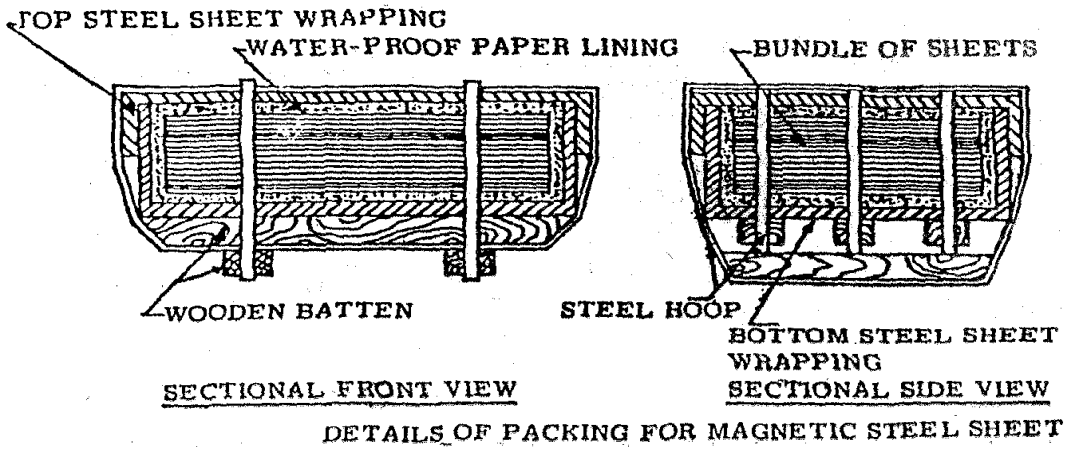

DETAILS OF PACKING FOR MAGNETIC STEEL SHEET

Note:

a) Water proof paper lining shall be preferably Volatile Corrosion Inhibitor (V.C.I.) Coated Paper with an additional polythene (100 micron) enveloped.

b) Approximate weight of each bundle shall be 2 to 3 metric tonnes. Bundle weighing around 2.5 metric tonnes is however preferred.

c) The packing should ensure that there is no seepage of moisture and the sheets reach BHEL in completely rust free condition. It shall be strong enough to withstand handling at the docks, at sea and on the road.

10.2 Material Supplied In Continuous Coil:

The nominal weight of each coil shall be around 2500 kg.

The nominal internal diameter of coil shall be around 500 mm.

Packing shall be sea-worthy and shall protect the coils from damage and rusting during transit.

The supplier's grade/reference shall be marked at every one metre intervals throughout the coil length.

Coils shall be vertically packed according to the instructions and drawing given below.

a) An annular protection board shall be placed at either end of coil.

b) The coil shall then be wrapped with waterproof anti-rust proof paper by lapping axially all around the circumference.

c) The coil shall then be covered by polythene sheet or anti-rust waterproof paper and the ends sealed properly.

d) A galvanised sheet shall be wrapped on the outside of the coil and the top and bottom of the coils. Care shall be taken to ensure that it covers the top and bottom of the coils and extend sufficiently over the inside diameter of the coil.

उत्पाद मानक
PRODUCT STANDARD

गोपनीय एवं अधिकार सुरक्षित इस प्रपत्र पर दी गई जानकारी भारत हेवी इलेक्ट्रिकल्स लिमिटेड की संम्पत्ति है इसे प्रत्यक्ष या अप्रत्यक्ष रू से कम्पनी के हितो को नुकसान पहुँचाने के लिए कदापि उपयोग नही किया जावे.

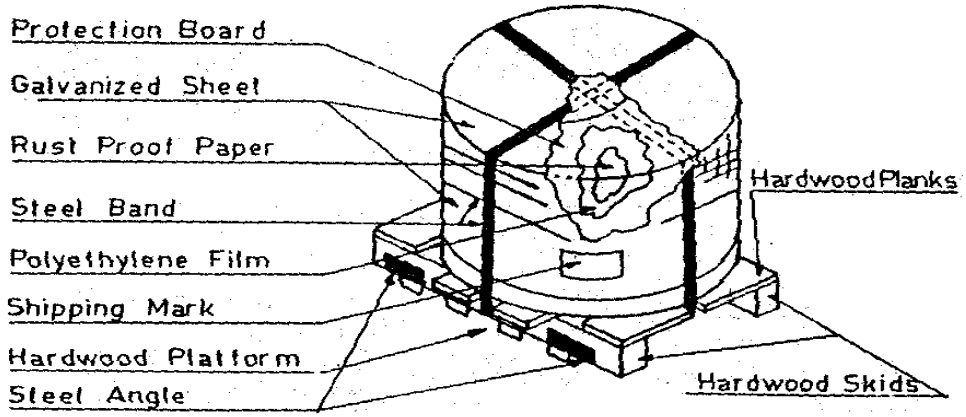

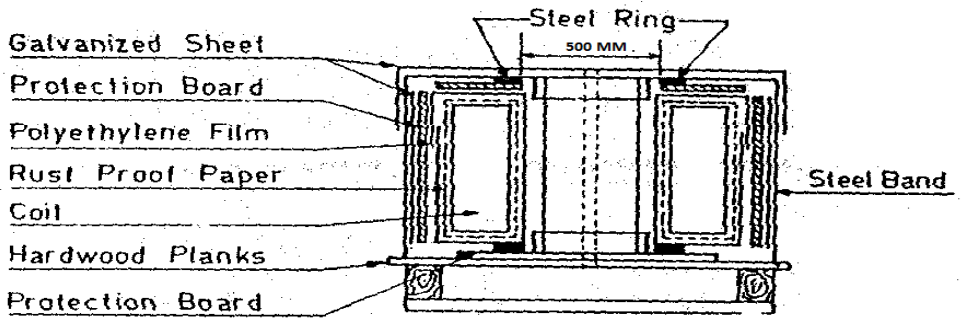

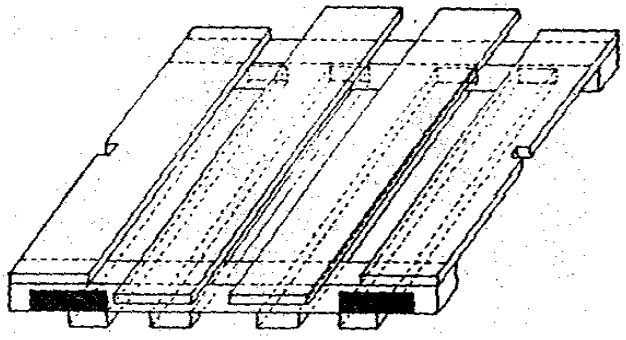

e) A galvanised sheet shall be wrapped on the inside of the coil. Care shall be taken that it overlaps sufficiently over the ends of the sheet mentioned in (d) above.

f) Steel ring made from thick angle sheets shall be placed on the rim of the inner diameter at both ends of the coil. The rings shall be held at either ends at four points by steel bands.

g) The coil shall then be mounted on wooden skids held together by steel bands. Wooden skids must have cutouts to house the steel bands for tight fit and to avoid slippage.

h) The packing shall ensure that there is no seepage of moisture and the coils should reach BHEL in completely rust free condition. It shall be strong enough to withstand handling at the docks, at sea and on the road.

i) Coils shall be sufficiently tight-wound to prevent collapse to an extent that would preclude their being mounted on a mandrel appropriate to the ordered internal diameter.

j) Each package should indicate the, Sling Position, for lifting without damage. It is preferable to fix a suitable size of, 'Sheet Steel Angle', at the position where the Sling Rope is to be fitted to avoid slippage/damage/breakage of the wooden skid at four places.

गोपनीय एवं अधिकार सुरक्षित इस प्रपत्रा पर दी गई जानकारी भारत हेवी इलेक्ट्रिकल्स लिमिटेड की सम्पत्ति है इसे प्रत्यक्ष या अप्रत्यक्ष रू से कम्पनी के हितो को नुकसान पहुँचाने के लिए कदापि उपयोग नही किया जावे.

10.3 Marking:

A metal label / tag shall be securely attached with each bundle outside its wrapping and shall be legibly marked with the following information.

HG10062, BHEL Order No, Supplier's Name & Grade, Identification No, Size & Weight, Melt No, Packet/Bundle No.

11.0 REFERRED STANDARDS (Latest Publications Including Amendments) :

1) AA 0851711 2) AA 27541 3) IS 648 4) IS 649
5) IEC 60404-8-4 6) IEC 60404-2 7) ASTM A 717 8) AISI C6
9) DIN EN 10106

12. GENERAL INFORMATION FOR CALCULATION

(NOT MANDATORY / TYPICAL VALUES)

Mechanical Properties(Typical)

Density	:	As per Table-3
Tensile strength	:	530 N/mm^2
Yield strength	:	400 N/mm^2
Elongation on (5.65 √ So GL)	:	18%