FIRST ANGLE PROJECTION (ALL DIMENSIONS ARE IN mm)

REV.	DATE	ALTERED / CHECKED / APPROVED	ZONE
43	23.02.15		ITEM 35, BOLT LENGTH 30 MM CHANGED TO 25 MM.
42	13.03.13		FIG. 2 WAS FIG. 1. STD AGAINST 'T' IN IT. 033,034& 035 WERE NOT ON.
41		–SD–	IN BOM IT. 036 WAS NOT ON. DRG. DIGITIZED.
44	08.08.16		ITEM 36, BOLT HEAD THICKNESS 8 MM CHANGED TO 6 MM.
45	24.10.16		ITEM–36, BOLT HEAD THICK–NESS 7 MM WAS 6 MM.
46	24.11.16		IN ITEM–36, BOLT HEAD THICKNESS 8MM WAS 7 MM.
47	14.05.18	ALT	NOTE 3 & 4 MODIFIED.

ADDITIONAL INFORMATION

STATUS OF DRAWING

DISTRIBUTION OF PRINTS: TME–1, TXM–3, TNX–1

NOTES:–

1. ALL BOLTS/SCREWS ARE TO IS:1364 (TABLE2) AND IS:1367 (P8.8),THREADS AS PER IS 4218 "6g" EXCEPT FOR:–
   (a) BOLTS TO FIG.1 TO HAVE DRILLED HOLE OF ø'D' ON STANDARD HEAD.
   (b) BOLTS TO FIG. 2 WITH REDUCED HEAD THICKNESS 'T' AND SHOULD NOT BE CHAMFERED ON HEAD.
2. ALL BOLTS/SCREWS TO BE PARKER–ISED TO AA0673616.
3. ITEMS 4 TO 8, 10 TO 12,14,16,19,20,25, 27,28,31 TO 33 & 36 ARE TO BE 100% MCD. TESTED TO BP08501178.
4. FOR ALL BOLTS/SCREWS THREADS TO BE MANUFACTURED BY ROLLING PROCESS ONLY.

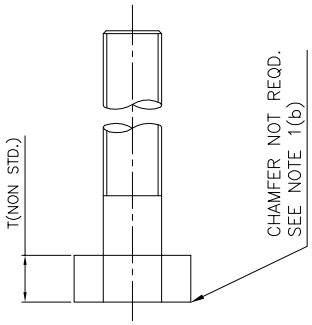

FIG–2

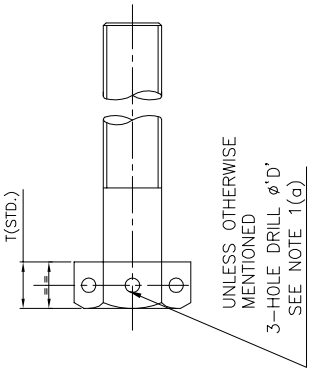

FIG–1

TABLE OF PARTICULARS

ITEM	FIG.	DESCRIPTION	STYLE NO.	TOOL NO.	'D'	'T'	M/C REF.	ASSY. DRG. NO.
1	1	BOLT HEX. M10x65–P8.8			2.5	STD.	GB–12A/M	04350016001
2	1	SCREW HEX. M10x25–P8.8			2.5	STD.	GB–12A/M	04350016001(18)
3	1	BOLT HEX. M12x50–P8.8			2.5	STD.	GB–12A/M	04350016001(22)
4	2	SCREW HEX. M30x65–P8.8	ST. 452253		–	13	165/M	04393200001(07)
5	2	SCREW HEX. M24x60–P8.8			–	10	TM3601AZ,133AW	F4625440(6) E4700736(1)
6	2	SCREW HEX. M20x45–P8.8	ST. 452254		–	8	165/M TM4303BY,DY	04394001001(15)
7	1	SCREW HEX. M20x45–P8.8	ST. 450137		2.5 1–HOLE	STD.	TG10931AZ/M	04314059001(2) 04314016001(2)
8	2	SCREW HEX. M20x40–P8.8			–	7	TM4601AZ	24394341001(9) 14394337001(2)
9	1	SCREW HEX. M12x55–P8.8	ST. 90445 44322	1457914	2.5	STD.	TM4601AZ	04390237001(4)
10	2	SCREW HEX. M24x40–P8.8				10	TM4601AZ	14393237002(7)
11	2	SCREW HEX. M24x65–P8.8				12	TM5001AZ	G4515487(9)

THE INFORMATION ON THIS DOCUMENT IS THE PROPERTY OF BHARAT HEAVY ELECTRICALS LIMITED.
IT MUST NOT BE USED DIRECTLY OR INDIRECTLY IN ANY WAY DETRIMENTAL TO THE INTEREST OF THE COMPANY.

REF. DRG. NO.

SIGN. & DATE

INVENTORY NO.

BHARAT HEAVY ELECTRICALS LTD.
BHOPAL

	NAME	SIGN	DATE
DRN.	–SD–	–SD–	
CHD.	–SD–	–SD–	
APPD.	–SD–	–SD–	

NO. OF VAR.

DEPT.	UNTOL. DIMS. GR.	SCALE	WEIGHT (K.G.)	REF. TO ASSY. DRG.	ITEM NO.	NO. OF ITEM
TME CODE 405		NTS				

TITLE: BOLTS & SCREWS

DRAWING NO. C450062 REV. 47

SHT. NO. 01 NO. OF SHT. 03

SIZE A4

File No. HEP-TPTN0MNX/19/2025-HEP-TXM20500 (Computer No. 198097)
Generated from eOffice by Kamal Singh Narvariya, MANAGER(KSN)-MNX35400-HEP, MANAGER, HEP-HEAVY ELECTRICALS PLANT (HEP) on 04/07/2025 09:30 am

FIRST ANGLE PROJECTION (ALL DIMENSIONS ARE IN mm)

REV.	DATE		ZONE
		ALTERED	
		CHECKED	
		APPROVED	

REV.	DATE		ZONE
		ALTERED	
		CHECKED	
		APPROVED	

REV.	DATE		ZONE
		ALTERED	
		CHECKED	
		APPROVED	

ADDITIONAL INFORMATION

STATUS OF DRAWING

DISTRIBUTION OF PRINTS TME-1, TNX-1 TXM-3,

B-1-1-4

DIVISIONAL STANDARDS – TME

TABLE OF PARTICULARS (CONTD.)

ITEM	FIG.	DESCRIPTION	STYLE NO.	TOOL NO.	'D'	'T'	M/C REF.	ASSY. DRG. NO.
12	1	BOLT HEX. M24x70–P8.8	ST. NO. 462054		4 1HOLE	STD	TM 2701 AZ TM 2701 BY	04391452002(4) 04391452001(4)
13	2	BOLT HEX. M16x90–P8.8	ST. NO. 452287			7	165/M	04394001001(31)
14	1	BOLT HEX. M24x100–P8.8			4 1HOLE	STD	TM 2701 AZ TM 2701 BY	04391452002(8) 04391452001(8)
15	1	BOLT HEX. M12x40–P8.8	ST. NO. 90445 44314		3	STD	253 BW TM 4601 AZ	24394437002(9)
16	1	BOLT HEX. M24x80–P8.8			2.5	STD	TM 5001 AZ	G4515487(12)
17	1	BOLT HEX. M16x60–P8.8			2.5	STD	GB 241 Z	G4515520(22)
18	2	BOLT HEX. M16x40–P8.8	ST. NO. 90445 44330			8	TM 4603 AZ	24394441003(7)
19	1	BOLT HEX. M24x100–P8.8			4 1HOLE	STD	TM 3603 AZ	G4515690(7)
20	2	SCREW HEX. M24x55–P8.8				8	TM 4301 AZ TM 4303	14393202009(7) 14393280001(22) 14393228015(24)
21	1	SCREW HEX. M12x45–P8.8			2.5	STD	TM 4301 AZ	24394402001(9)
22	1	SCREW HEX. M12x60–P8.8			2.5	STD	TM 4301 AZ	24394302002(9)
23	1	SCREW HEX. M10x20–P8.8	ST. NO. 90445 44306		2.5	STD	TM 3603 AZ	G4515690(5)
24	1	SCREW HEX. M12x50–P8.8			2.5	STD	,,	H4505022(31)
25	2	BOLT HEX. M24x60–P8.8			—	8	,,	H4505022(33)
26	2	SCREW HEX. M12x30–P8.8			—	5	,,	H4505022(45)
27	1	BOLT HEX. M36x120–P8.8			6.0 3HOLE	STD	165/M	04391600001(23) 04391600002(18)
28	1	BOLT HEX. M36x140–P8.8			6.0 3HOLE	STD	,,	04391600002
29	1	BOLT HEX. M10x35LGTH–P8.8	—	—	2.5	STD	TG 10931 CX	14314216001(10)
30	1	BOLT HEX. M16x35–P8.8	—	—	2.5	STD	TM 4601 AZ	04390237001
31	2	SPL. BOLT M30x55–P8.8	—	—	—	10	TM 5002 AZ	14393227002
32	2	SCREW HEX. M24x45–P8.8/P12.9	—	—	—	12	TM 5002 AZ	14394327001

भारत हैवी इलेक्ट्रिकल्स लि.
BHEL
BHARAT HEAVY ELECTRICALS LTD.
BHOPAL

DEPT. TME	UNTOL. DIMS. GR.	SCALE NTS	WEIGHT (K.G.)
CODE 405			

TITLE: BOLTS & SCREWS

	NAME	SIGN	DATE
DRN.			
CHD.			
APPD.			

NO. OF VAR.

REF. TO ASSY. DRG.

ITEM NO.

NO. OF ITEM

DRAWING NO. C450062

REV. 03

SHT. NO. 02

NO. OF SHT.

SIZE A4

File No. H HEP-PTNOMMM-T-XMX-T-HEH-5202/61/XXX
Generated from eOffice by kamal kishor, MANAGER, HEP-HEAVY ELECTRICAL, PH: 0755-2433 (76086) on January 09, 2026 9:26:40 PM
1250342/2025/HEP-TXM20500

FIRST ANGLE PROJECTION (ALL DIMENSIONS ARE IN mm)

REV.	DATE	ALTERED / CHECKED / APPROVED	REV.	DATE	ALTERED / CHECKED / APPROVED	REV.	DATE	ALTERED / CHECKED / APPROVED	ADDITIONAL INFORMATION
ZONE			ZONE			ZONE			STATUS OF DRAWING
									DISTRIBUTION OF PRINTS TME-1, TNX-1 TXM-3,

DIVISIONAL STANDARDS – TME

B 1-1-4

TABLE OF PARTICULARS (CONTD.)

ITEM	FIG.	DESCRIPTION	STYLE NO.	TOOL NO.	'D'	'T'	M/C REF.	ASSY. DRG. NO.
33	1	SCREW HEX. M24x45-P10.9		455	2.5 1HOLE	STD	TA10103AZ	04304590002(10)
34	1	SCREW HEX. M12x35-8.8			2.5 3HOLE	STD	DMKT	04451075001(23)
35	1	SCREW HEX. M12x25-P8.8			2.5 3HOLE	STD	DMKT	04451075001(55)
36	2	SCREW HEX. M20x55-P8.8				8	TM4303	14393280001(5)

BHARAT HEAVY ELECTRICALS LTD.
BHOPAL

	NAME	SIGN	DATE	NO. OF VAR.
DRN.				
CHD.				
APPD.				

DEPT.	UNTOL. DIMS. GR.	SCALE	WEIGHT (K.G.)	REF. TO ASSY. DRG.	ITEM NO.	NO. OF ITEM
TME		NTS				
CODE 405						

TITLE

BOLTS & SCREWS

DRAWING NO. C450062 REV.

SHT. NO. 03 NO. OF SHT. 03

SIZE A4

File No. HEP-TPTN0MNX/1972025-HEP-TXM20500 (Computer No. 198097)
Generated from eOffice by Kamal Singh Narvariya, MANAGER(KSN)-MNX35400-HEP, MANAGER, HEP-HEAVY ELECTRICALS PLANT (HEP) on 04/07/2025 09:30 am

FIRST ANGLE PROJECTION (ALL DIMENSIONS ARE IN mm)

REV.	DATE	ALTERED	REV.	DATE	ALTERED
		CHECKED	01	24 2/93	CHECKED

BOM UPDATED.

ADDITIONAL INFORMATION

STATUS OF DRAWING

DISTRIBUTION OF PRINTS TME-3 TXM-3 TMX-1

THE INFORMATION ON THIS DOCUMENT IS THE PROPERTY OF BHARAT HEAVY ELECTRICALS LIMITED.
IT MUST NOT BE USED DIRECTLY OR INDIRECTLY IN ANY WAY DETRIMENTAL TO THE INTEREST OF THE COMPANY.

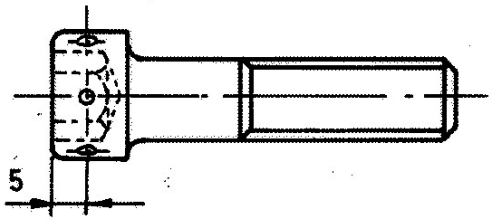

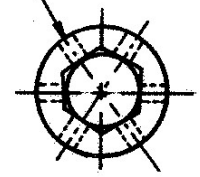

6-HOLES DRILL ϕ3 & REMOVE SHARP EDGES AT BOTH ENDS.

TOOL LIST		
ITEM	TOOL	DESCRIPTION
001	1457390	DRILL JIG.

MODIFY AS SHOWN ST.NO. 454113	001	HEX. SOCKET HEAD CAP SCREW M12 X 40 P 12.9	1	AA 7123123	NA	KG	0.08
65 REMARKS 75	25 27 ITEM No.	29 DESCRIPTION 58	59 STD.	34 MATL. CODE 45 / 46 MATL. SPECN. 54	55 A / C	56 57 UNIT	58 UNIT WT. 65 / 66 QTY. 71

B-4900475 REF.DRG. No.

CARD TYPE 3 → 28 | 28 → CARD TYPE 1 | 28 → CARD TYPE 2

SIGN & DATE

BHARAT HEAVY ELECTRICALS LTD.
BHOPAL

	NAME	SIGN	DATE
DRN	Y.R. DESHPANDE		25-8-88
CHD	SGD		25-8-88
APPD	SKB		27-8-88

DEPT	GRADE OF UN. TOL. DIM.	SCALE	WEIGHT (Kg.)	REF. TO ASSY. DRG.	ITEM No.	No. OF ITEMS
TME	±1/M/1	NTS.	0.08	2-439-43-41-001	006	001
CODE 405						

INVENTORY No.

TITLE HEX. SOCKET HEAD SCREW

DRAWING No. 4 439 43 41 001 REV. 01

SHEET No. 01 No. OF SHEETS 01

TM-4601 A2/AX, TM-4603 A2/AX

File No. HEP-TPTPDMNX/19/2025-HEP-TXM20500 (Computer No. 198097)
Generated from Office by Kamal Singh Tomaliya, MANAGER(KAM-MNX-35), TOOL ENGINEERING & SERVICES, ELECTRICALS PLANT (HEP) on 04/07/2025 09:30 am

REV.	DATE	ALTERED / CHECKED / APPROVED	REV.	DATE	ALTERED / CHECKED / APPROVED	ADDITIONAL INFORMATION	B 4900427
06	10.6.10		05	26.03.09	KANSARA	STATUS OF DRAWING	
DIMS. 15 & 36 WERE NOT ON.			DRAWING UPDATED & DIGITIZED.			DISTRIBUTION OF PRINTS	TME - 1, TXM - 3, TNX - 1
07	18.6.11	ALTD / CKD / APPD					
DIM 80 WAS 60.							

TOOL LIST		
IT.	TOOL NO.	DESCRIPTION
001	1457452	DRILL JIG

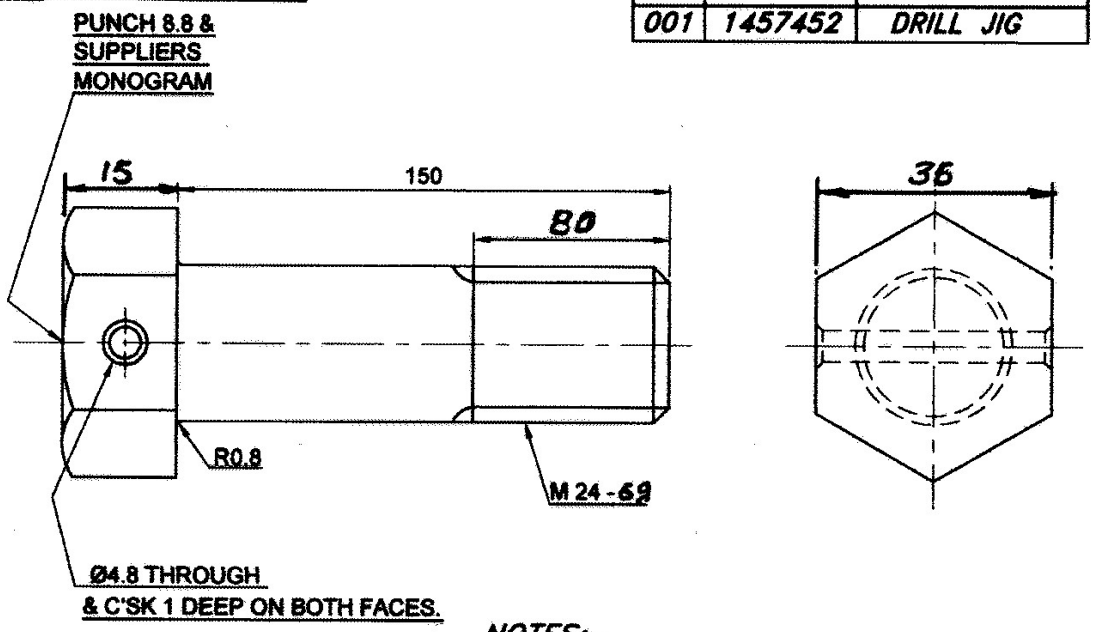

NOTES:-

1. BOLTS ARE TO BE 100% CRACK DETECTED TO BP 0850178.
2. DIMN. TOLERANCES AS PER IS 1364.

STYLE LIST		
VAR	IT.NO.	ST NO.
–	002	BP9094760339

REF. DRG. NO.						
	001	HEX. BOLT M 24 X 150 — 8.8			KG.	0.60
				AA 7121124		
REMARKS	ITEM NO.	DESCRIPTION	STD	MATL. CODE / MATL. SPCN.	A C	UNIT WT. / QTY.
28 —— CARD TYPE-3		28 —— CARD TYPE-1		28 —— CARD TYPE-2		

SIGN. & DATE

BHARAT HEAVY ELECTRICALS LTD. BHOPAL

	NAME	SIGN	DATE	NO. OF VAR.
DRN	VRD	Sd	13.10.87	
CKD	SGD	Sd	13.10.87	
APPD	SKB	Sd	21.5.88	

INVENTORY NO.

DEPT	GRADE OF UNTOL.DIM.		SCALE	WEIGHT (K.G.)	REF. TO ASSY. DRG.	ITEM NO.	NO. OF ITEM
TME / CODE 405	C/M/F		NTS	0.60	0 439 14 41 001	005	001

TITLE **AXLE CAP SPECIAL BOLT**
TM4501AZ/TM4603AZ/TM 4601AZ

DRAWING NO. **4 439 14 41 001** REV. **07**

SHT. No. 01 NO. OF SHT. 01

THE INFORMATION ON THIS DOCUMENT IS THE PROPERTY OF BHARAT HEAVY ELECTRICALS LIMITED
IT MUST NOT BE USED DIRECTLY OR INDIRECTLY IN ANY WAY DETRIMENTAL TO THE INTEREST OF THE COMPANY

File No. HEP-TPTN0MNX/19/2025-HEP-TXM20500 (Computer No. 198097)
Generated from eOffice by Kamal Singh Narvariya, MANAGER(KSN)-MNX35400-HEP, MANAGER, HEP-HEAVY ELECTRICALS PLANT (HEP) on 04/07/2025 09:30 am

	AMENDMENT -NOTIFICATION	AA 067 36 16	Rev. No. 01
		PAGE 1 OF 1	

AA 067 36 16: PROCESS FOR MANGANESE PHOSPHATING OF FERROUS SURFACES BY IMMERSION PROCESS

PAGE 1 OF 7; Cl 3.0 COMPLIANCE WITH NATIONAL STANDARDS

Year of IS reference is modified as follows:

IS:3618-66 (Reaffirmed 1997)

Please see Instructions on the reverse.

Ref : Cl; 31.11.19 of MOM of MRC-C	Amd No. 03	Approved MRC- C	Issued CORP. R&D	Date 15.10.2002	Cum.Sr.No. A 3170

File No. HEP-TPTN0MNX/19/2025-HEP-TXM20500 (Computer No. 198097)
Generated from eOffice by Kamal Singh Narvariya, MANAGER(KSN)-MNX35400-HEP, MANAGER, HEP-HEAVY ELECTRICALS PLANT (HEP) on 04/07/2025 09:30 am

	AMENDMENT -NOTIFIFCATION	AA 067 36 16	REV. No. 01
		PAGE 1 OF 1	

AA 067 36 16: PROCESS FOR MANGANESE PHOSPHATING OF FERROUS SURFACES BY IMMERSION PROCESS

1) **PAGE 5.7; Cl 8.3:**
Ferrous ION given in the title is modified as "**ferrous iron**"

2) **PAGE 6.7; Cl 8.3.3:**
Ferrous ION given in the first sentence is modified as "**ferrous iron**"

Please see Instructions on the reverse.

Ref : Cl. No. 28.16.19 of MOM of 28th MRC(C)	Amd No. 02	Approved MRC (C)	Issued CORP. R&D	Date 15.10.2000	Cum.Sr.No. A 2868

	AMENDMENT - NOTIFICATION	AA 067 36 16 Rev. No. 01 PAGE 1 OF 1

AA 067 36 16 : PROCESS FOR MANGANESE PHOSPHATING OF FERROUS SURFACES BY IMMERSION PROCESS

1.0 Page 3 of 7

Cl. 6.1.3 " 9 Mmersion Time " is replaced by "Immersion Time"

2.0 Page 5 of 7

2.1 Cl. 8.2 The existing matter is replaced by the following:

"The concentration of bath solution shall be regularly checked depending upon the use of bath and maintained as detailed below".

2.2 Cl. 8.3 The title is replaced by the following:

"Ferrous ion concentration maximum 0.5%".

2.2 Cl 8.3.2, "The existing matter is replaced by the following" No. of ml of 0.1 N Potassium Permanganate consumed x 0.056 = Percentage of Ferrous Iron.

3.0 Page 6 of 7

CL. 8.3.3 In the 1 st sentence "when ferrous ION concentration reaches...." is replaced by the following:

" when ferrous ion concentration reaches...."

Please see Instructions on the reverse.

Ref :	Amd. No.	Approved	Issued	Date	Cum.Sl.No.
Cl 27.4.3 of MOM of MRC (C)	01	MRC (C)	CORP. R&D	15-08-99	A 2587

File No. HEP-TPTNOMNX/19/2025-HEP-TXM20500 (Computer No. 198097)
Generated from eOffice by Kamal Singh Narvariya, MANAGER(KSN)-MNX35400-HEP, MANAGER, HEP-HEAVY ELECTRICALS PLANT (HEP) on 04/07/2025 09:30 am

भेल BHEL	CORPORATE STANDARD	AA 0673616
		Rev.No. 01
		PAGE 1 OF 7

COPYRIGHT AND CONFIDENTIAL
The information on this document is the property of BHARAT HEAVY ELECTRICALS LIMITED.
It must not be used directly or indirectly in any way detrimental to the interest of the company.

PROCESS FOR MANGANESE PHOSPHATING OF FERROUS SURFACES BY IMMERSION PROCESS

1. GENERAL:

This standard details the process for producing a black, non-metallic crystalline, antifriction, coating of manganese - iron phosphate on steel and iron surfaces and its subsequent treatment in oil and varnish.

2. APPLICATION:

This corrosion resistant coating reduces wear on moving parts such as piston, piston rings, gears, liners, bolts, nuts, tools, camshafts, compressor shafts, lubrication boxes, cylinders and all types of machine parts where ever wear is a constant factor to be considered.

3. COMPLIANCE WITH NATIONAL STANDARDS:

This standard has reference to the following national standards in respect of surface condition and quality of deposits.

IS: 3618-1966 (Reaffrimed 1991) : Phosophate treatment of iron and steel for protection against corrosin.

4. MATERIALS:

Material	CPS.No.	IS No.	Avialable From
4.1 Insulating Oil (Low viscosity)	: AA 27101	(IS : 335)	
4.2 Chromic Acid	: AA 54104	(IS : 330)	
4.3 Rusto-proof pc-19	: AA 55608		M/s.Peddington Chemical Industry, Bombay.
4.4 Trichloroethylene (Technical)	: AA 56706	(IS : 245)	

Revisions: Cl.26.6.9 MOM of MRC (C)			Approved: INTERPLANT MATERIAL RATIONALISATION COMMITTEE - MRC (C)		
Rev.No. 01	Amd.No.	Reaffirmed	Prepared	Issued	Dt. of 1st Issue
Dt. 15-11-97	Dt.	Year:	BHOPAL	CORP. R&D	JAN' 85

File No. HEP-TPTN0MNX/19/2025-HEP-TXM20500 (Computer No. 198097)
Generated from eOffice by Kamal Singh Narvariya, MANAGER(KSN)-MNX35400-HEP, MANAGER, HEP-HEAVY ELECTRICALS PLANT (HEP) on 04/07/2025 09:30 am

4.5 Sufix MN - 641 : M/s.Grauwer & Weil (I) LTD., Bombay.

4.6 Kemfix Mn 741 : M/s.Artek Surfin Chemicals (P) Ltd. Bombay.

4.7 Black Stain Shellac Varnish : M/s.C.I.T. BHEL, Bhopal and M/s.Shalimar Paints, Bombay.

5. **EQUIPMENT:**

5.1 **Phosphating Tank:**

Mild steel tank preferably lined with hard rubber or propylene and fitted with a water supply, an over flow and a drain system. Thermostatically controlled heating arrangement shall be provided in the tank.

5.2 **Chromic Acid Tank:**

Mild steel tank preferably lined with hard rubber and fitted with a water supply, an over flow and a drain. Thermostatically controlled heating arrangement must be provided in the tank.

5.3 **Rinsing Tank:**

Mild steel tank provided with a water supply, an overflow and a drain.

5.4 **Air Blowing:**

A high pressure of cool air supply may be provided for initial drying.

5.5 **Staining Tank:**

Mild steel tank fitted with a mild steel lid and a drain cock.

5.6 **Oil Tank:**

Mild steel tank fitted with a mild steel lid and a drain cock.

5.7 **Jigs And Racks:**

Jigs, brackets and suspension hooks must be made of mild steel, stainless steel or bakelite.

6. PREPARATION OF BATH SOLUTIONS AND OPERATING CONDITIONS:

6.1 Phosphating Solution:

6.1.1 Rusto-Proof PC 19 : 5% (V/V)
Operating Temperature : 95 to 99 °C.
Immersion Time : 10 to 30 minutes.

6.1.2 Surfix MN-641 : 7% (V/V)
Operating Temperature : 95 to 99 °C.
Immersion Time : 10 to 30 minutes.

6.1.3 Kemfix MN - 741 : 7% (V/V)
Operating Temperature : 95 to 99 °C
9 Mmersion Time : 10 to 30 minutes

6.1.4 The phosphating tank must be thoroughly cleaned before making up the solution.

6.1.5 The clean phosphating tank shall be half filled with clean water and then add the necessary quantity of RUSTO-PROOF PC-19 or SURFIX MN-641 or Kemfix MN 741 to the bath according to the clause 6.1.1, or 6.1.2, or 6.1.3. Bring the solution to working level by adding more water and mix well by stirring and heat to 65 to 70°C.

6.1.5 The bath shall be aged by introducing preferably 50 to 100 gm of cleaned steel wool or scrap iron pieces per 100 litres of bath solution for 30 to 50 minutes. The steel wool shall then be removed and the bath is heated to operating temperature.

6.2 Chromic Acid Solution:

6.2.1 Chromic acid : 0.05% (W/V)
Operating temperature : 85 to 90 °C
Immersion time : 0.5 to 1 minute.

6.3 Black Stain Shellac Varnish:

The varnish shall be supplied ready for use at room temperature.

6.4 Insulating Oil:

The oil shall be supplied ready for use at room temperature.

File No. HEP-TPTN0MNX/19/2025-HEP-TXM20500 (Computer No. 198097)
Generated from eOffice by Kamal Singh Narvariya, MANAGER(KSN)-MNX35400-HEP, MANAGER, HEP-HEAVY ELECTRICALS PLANT (HEP) on 04/07/2025 09:30 am

7. **PROCESS:**

7.1 **Cleaning:**

The articles that are to be phosphated shall be free from oil, grease, rust, scale etc. For manganese phosphating rust and scales shall be preferably removed by shot blasting. In case shot blasting is not possible, cleaning shall be done as per Corporate Standard AA 067 36 01.

7.1.1 All articles shall be placed in a basket or jig or otherwise suitably suspended and the dipped in trichloroethylene for few seconds before immersing it in the phosphating bath.

7.2 **Phosphating:**

All articles shall then be phosphated in the specified operating conditions as mentioned in clause 6.1 and rinsed in clean running water for 15 to 30 seconds.

7.3 **Passivation:**

After rinsing articles shall be dipped in the Chromic Acid passivation solution for 0.5 to 1 minute.

7.4 **Drying:**

The articles shall then be dried at high pressure of cool air supply.

7.5 **Staining:**

Where necessary, after cooling but within two hours of air drying as above, the articles, shall be immersed in black stain shellac varnish for 3 to 5 seconds, removed and allowed to drain and dry in air for atleast 30 minutes.

7.6 **Oiling:**

After staining, the articles shall be immersed in low viscosity insulating oil for 3 to 5 seconds at room temperature. It shall then be removed from oil and allowed to drain.

8. **TESTING & MAINTENANCE :**

8.1 **Testing of Phosphating Solution:**

The solution shall be tested at suitable intervals by the following procedure:

8.1.1 Clean water shall first be added to the solution, if necessary, to restore the latter to the correct working level, followed by stirring to ensure complete mixing.

File No. HEP-TPTN0MNX/19/2025-HEP-TXM20500 (Computer No. 198097)
Generated from eOffice by Kamal Singh Narvariya, MANAGER(KSN)-MNX35400-HEP, MANAGER, HEP-HEAVY ELECTRICALS PLANT (HEP) on 04/07/2025 09:30 am

8.1.2 10 ml. of the working solution shall then be transferred to the 250 ml conical flask. Two or three drops of Alcoholic 1% Phenol-Phthalein indicator must then be added, with shaking.

8.1.3 Sodium Hydroxide 0.10 N shall then be added in with occational shaking or stirring until a permanent colour change (to pink) is just obtained.

8.1.4 The volume of 0.10 N NaOH in ml required shall be noted. The volume in ml is pointage.

8.2 **Maintenance Of Solution Strength/Pointage:**

The concentration of bath solution shall be regularly checked depending upon the use of bath and maintaince as detailed below.

8.2.1 If the solution is at the correct working strength/pointage the volume obtained in clause 8.1.4 will lie between 30 and 35 ml. for RUSTO-PROOF PC-19 solution and between 40 & 50 for SURFIX MN- 641,and Kemfix MN-741 solution. If the above tests show any deviation from this range, the strength of the solution shall be adjusted as follows:-

8.2.1.1 If the volume is greater than 35 ml. for RUSTO-PROOF PC-19 or greater than 50 ml for SURFIX MN-641 or Kemfix MN-741 sufficient quantity of the solution shall be removed from the tank and replaced by clean water to reduce the volume within the working range.

8.2.1.2 For Rusto-proof PC-19:

If the volume is less than 30 ml., then for each ml.(pointage) below 30, add 2 litres of PC-19 solution per 1000 litres of bath solution.

For Surfix Mn-641 OR KemFix MN-741:

If the volume is less than 40 ml., then for each ml.(pointage) below 40, add 1.75 litre of Surfix -Mn-641 solution per 1000 litres of bath solution.

8.3 **Ferrous ION Concentration Maximum 0.5%:**

The following procedure shall be followed for testing.

8.3.1 10 ml. of bath solution shal be taken into a 250ml. conical flask, add 1-2 ml. of 50 % H2 SO4 solution to it. Titrate against 0.1 N Potassium Permanganate till colour changes from colourless to pink, persisting for a least 15 seconds.

8.3.2 No.of ml of 0.1 N Potassium Permanganate consumed X 0.056 = Percentage of Ferrous ION.

File No. HEP-TPTN0MNX/19/2025-HEP-TXM20500 (Computer No. 198097)
Generated from eOffice by Kamal Singh Narvariya, MANAGER(KSN)-MNX35400-HEP, MANAGER, HEP-HEAVY ELECTRICALS PLANT (HEP) on 04/07/2025 09:30 am

8.3.3 When ferrous ION concentration reaches above 0.5% (i.e. consumption of 0.1 N Potassium permanganate is 9 ml.) the phosphate bath should be partially replaced with fresh solution or if required completely discarded.

8.4 Sludge Removal:
The sludge formed during processing shall be removed from the tank and the heating coils after every month. After such cleaning, the solution strength shall be tested as in 8.1 and necessary adjustments made.

8.5 Chromic Acid Solution:
This solution shall be replaced each week.

8.6 Black Stain Shellac Varnish:
The viscosity of varnish at 27°C ± 2 in cup-4 to IS:3944 shall be 30 ± 5 seconds and to be tested each week.

8.7 Insulating Oil (Low Viscosity):
The working level of the oil shall be maintained by periodic addition of new oil.

8.8 Speed of Phosphate Coating:

5 to 7 microns of phosphate coating will be deposited in 30 minutes.

9. INSPECTION AND QUALITY OF DEPOSIT:

When tested in accordance with the test methods shown against each, the deposit shall conform to the norms specified below:

9.1 Sampling:

A minimum of 1% of each batch/load or part thereof shall be taken at random for testings. When the components are big and can not be subjected to any of the specified test, a test panel of suitable size of the same basis metal shall be phosphated along with component under identical condition for the purpose of test (approximate size of test panel 5 cm X 10 cm).

9.2 Freedom from Defects: (IS : 3618)

Phosphated surface shall be of mouse black / dark grey crystalline appearance. They shall be free from untreated patches and from flaky and uneven deposits, some time caused by excessive sludge in the bath. They shall be free from scratches, pits and residues of the processing solution as it may initiate deterioration of the organic coating or premature corrosion.

9.3 Weight of coating: (IS : 3618)

7.5 gm/m^2 minimum.

10. **Referred Standards:** (Latest Publication Including Amendments)

1) AA 27101 2) AA 54104 3) AA 56706 4) AA 55608

5) AA 0673601 6) IS : 330 7) IS : 335 8) IS : 245

9) IS : 3618

File No. HEP-TPTN0MNX/19/2025-HEP-TXM20500 (Computer No. 198097)

Generated from eOffice by Kamal Singh Narvariya, MANAGER(KSN)-MNX35400-HEP, MANAGER, HEP-HEAVY ELECTRICALS PLANT (HEP) on 04/07/2025 09:30 am

बीएचईएल BHEL	**CORPORATE STANDARD**	AA7121123
		Rev. No. 09
		PAGE 1 of 3

SCREWS, HEXAGON HEAD, PRODUCT GRADE 'A' COARSE PITCH, STEEL, PROPERTY CLASS 8.8 (M6 - M24)

1 DESIGNATION

A product Gr. A hexagon head, steel screws of thread M8, length 50mm, coarse pitch and conforming to property class 8.8 shall be designated as:

1.1 On drawings

i) Material specification column: AA7121123

ii) Description column: SCRU HEX A M8X50 - 8.8

1.2 On indents:

Screws Hex A M8 X 50 - 8.8; AA7121123

1.3 For issuing enquiries and on purchase orders:

While issuing enquiries and purchase orders delete BHEL standard number from the above description and add the information given under clause 2.

2 COMPLIANCE WITH STANDARDS

2.1 Dimensions, tolerances and general Requirements

As per IS 1364 : Part 2 : 2018

2.2 Mechanical Properties:

To conform to property class 8.8 as specified in Table - 3 of IS: 1367, Part 3.

Permissible hardness 238-350 HB for sizes M6-M10.

2.3 Threads

Pitch-coarse to IS: 4218, Part 2.

Tolerance quality - Medium.

Tolerance class - 6g.

2.4 Identification Marking:

As stated in clause 10 of IS 1367 : Part 3.

2.5 Surface Discontinuity

As per IS 1367 : Part 9 : Sec 1.

2.6 Finish

Plated as specified in BHEL order

COPYRIGHT AND CONFIDENTIAL
The Information on this document is the property of BHARAT HEAVY ELECTRICALS LIMITED.
It must not be used directly or indirectly in any way detrimental to the Interest of the company.

Revisions:			APPROVED: INTERPLANT MATERIAL RATIONALISATION COMMITTEE – MRC (Fasteners)		
Rev. No. 09	Amd. No.	Reaffirmed	Prepared HEEP, Haridwar	Issued Corp. R&D	Dt. of 1st Issue 01-01-1977
Dt: 20-03-2021	Dt:	Year: 16			

3 NOTE

3.1 Length and diameter combination (refer Table 1 on page 3 of 3) between the bold lines should only be used.

3.2 For screw threads, general (Metric) refer to BHEL standard AA0231800.

3.3 For tolerance grade, position and class refer to BHEL standard AA0230201.

3.4 Screws to this standard would be un-plated; divisions wishing to have plated bolts would have to get them plated.

3.5 Weights given in this standard are for general reference only and are not for commercial transactions.

3.6 When fasteners are to be tested with in BHEL, the sampling and acceptance plan shall be as per IS: 1367, Part 17.

4 REFERRED STANDARDS (Latest publications including amendment)

1) IS: 1364, Part.2
2) IS: 1367 Part.3, 9 : Sec 1 & 17
3) IS: 4218, Part.2
4) AA0230201
5) AA0231800
6) AA0231850

EXPLANATORY NOTE

The following changes have been made in the revision:

– In Clause 2.1, year of IS updated to 2018.
– In Clause 2.4, clause 10 in place of clause 9.2.1
– Clause 2.5, updated.

CORPORATE STANDARD

AA7121123
Rev. No. 09
PAGE 3 of 3

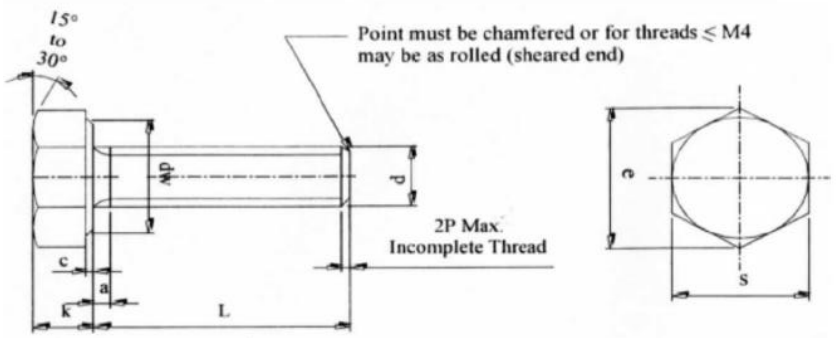

Note:
1. Corporate sub codes are only given in the Table-1
2. For thread runout refer AA0231850
3. Weights have been shown in kg per 1000 No.
4. Sizes beyond chain dotted lines are for Prod Gr. B

Table 1

All dimensions are in mm.

Thread Size d	Head					Washer			Un-threaded length a max	Sub-Code	Nom. Length (l)																							
	Flats S		Crns. e	Thickness k		Dia. d	Thickness C			Weight	10	12	14	16	20	25	30	35	40	45	50	55	60	65	70	75	80	85	90	100	110	120
	max	min	min	max	min	min	max	min																								
M6	10	9.78	11.05	4.15	3.85	8.9	0.5	0.15	3	Sub-Code	010	029	037	045	053	061	070	088											See Note-4			
										Weight	4.4	4.75	5.1	5.45	6.25	7.35	8.47	9.58														
M8	13	12.73	14.38	5.45	5.15	11.6	0.6	0.15	4	Sub-Code		096		100	118	126	134	142	150		169		177	185		193						
										Weight		9.96		11.2	12.5	14.3	16.3	18.2	20.2		24.2		28.1	30.1		34						
M10	16	15.73	17.77	6.58	6.22	14.6	0.6	0.15	4.5	Sub-Code				207	215	223	231	240	258	266	274	282	290	304	312				320	339		
										Weight				24.4	23.4	25.9	28.9	32	35.1	38.2	41.2	44.3	47.4	50.5	53.6				65.9	72		
M12	18	17.73	20.03	7.68	7.32	16.6	0.6	0.15	5.3	Sub-Code					347	355	363	371	380	398	401	410	428	436	444	452	460			479		
										Weight					33.7	37	41	45.4	49.9	54.3	58.7	63.6	67.6	72.1	76.5	80.9	85.4			103		
M16	24	23.67	26.75	10.18	9.82	22.5	0.8	0.2	6							487	495	509	517	525	533	541	550	568	576	584	592		606			
																71.7	78.4	85.1	92.2	100	108	115	123	131	139	147	155		171			
M20	30	29.67	33.53	12.72	12.28	28.2	0.8	0.2	7.5																							
M24	36	35.38	39.98	15.21	14.78	33.6	0.8	0.2	9																							

File No. HEP-TPTN0MNX/19/2025-HEP-TXM20500 (Computer No. 198097)
Generated from eOffice by Kamal Singh Narvariya, MANAGER(KSN)-MNX35400-HEP, MANAGER, HEP-HEAVY ELECTRICALS PLANT (HEP) on 04/07/2025 09:30 am

बी एच ई एल BHEL	**CORPORATE STANDARD**	AA7123123
		Rev. No. 07
		PAGE 1 of 3

SCREWS, CAP, HEXAGON SOCKET HEAD, PRODUCT GR. A, COARSE PITCH,STEEL, PROPERTY CLASS 12.9 (M3 - M36)

1 DESIGNATION

A hexagon socket head, cap screw of nominal size M10, length 30mm, coarse pitch, product grade A and of property clause 12.9 shall be designated as:

1.1 On drawings

i) Material specification column: AA7123123

ii) Description column: SCRU CAP SOCK A M10 X 30 – 12.9

1.2 On indents

Screw Hex socket head, cap A M10 X 30 – 12.9: AA7123123

1.3 For issuing enquiries and on purchase orders

While issuing enquiries and purchase orders, delete BHEL standard number from above description and add the information given under clause 2.

2 COMPLIANCE WITH STANDARDS

2.1 Dimensions, Tolerances & General Requirements

As per IS: 2269 - 2006

2.2 Mechanical properties

To conform to property class 12.9, as specified in table 3 of IS: 1367, Part 3

2.3 Threads

Pitch-coarse to IS: 4218, Part 2
Tolerance quality: Medium
Tolerance class: 5g - 6g

2.4 Identification Marking

As stated in clause 9 of IS: 1367, Part 3 (except for sizes up to M10)

2.5 Surface Discontinuity

As per IS: 1367, Part 9

2.6 Finish

Plated as specified in BHEL order.

COPYRIGHT AND CONFIDENTIAL
The Information on this document is the property of BHARAT HEAVY ELECTRICALS LIMITED.
It must not be used directly or indirectly in any way detrimental to the Interest of the company.

Revisions: As per Clause. 29.1.2 of 29th MOM of WG-F			**APPROVED:** INTERPLANT MATERIAL RATIONALISATION COMMITTEE – MRC (F)		
Rev. No. 07	Amd. No.	Reaffirmed	Prepared HEP, Bhopal	Issued Corp. R&D	Dt. of 1st Issue 01-01-1977
Dt: 15-04-2011	Dt:	Year: 2019 19			

CORPORATE STANDARD

3 NOTE

3.1 Length and diameter combination (refer Table 1) between the bold lines should only be used.

3.2 Sizes to the left side of the dotted lines are threaded to the head within 3P.

3.3 For screw threads, general (Metric) refer to BHEL standard AA0231800

3.4 For tolerance grade, position and class refer to BHEL standard AA0230201

3.5 Screws to this standard would be unplated, divisions wishing to have plated screws would have to get them plated.

3.6 Weights given in this standard are for general reference only and are not meant for commercial transactions.

3.7 The screws to this standard can also be supplied with diamond / straight knurling on the external side of head.

3.8 When fasteners are to be tested with in BHEL, the sampling and acceptance plan shall be as per IS:1367, Part 17

4 REFERRED STANDARDS (Latest publications including amendment)

1) IS: 1367, Part 3, 9 &17
2) IS: 4218, Part 2
3) AA0230201
4) AA0231800
5) AA0231850

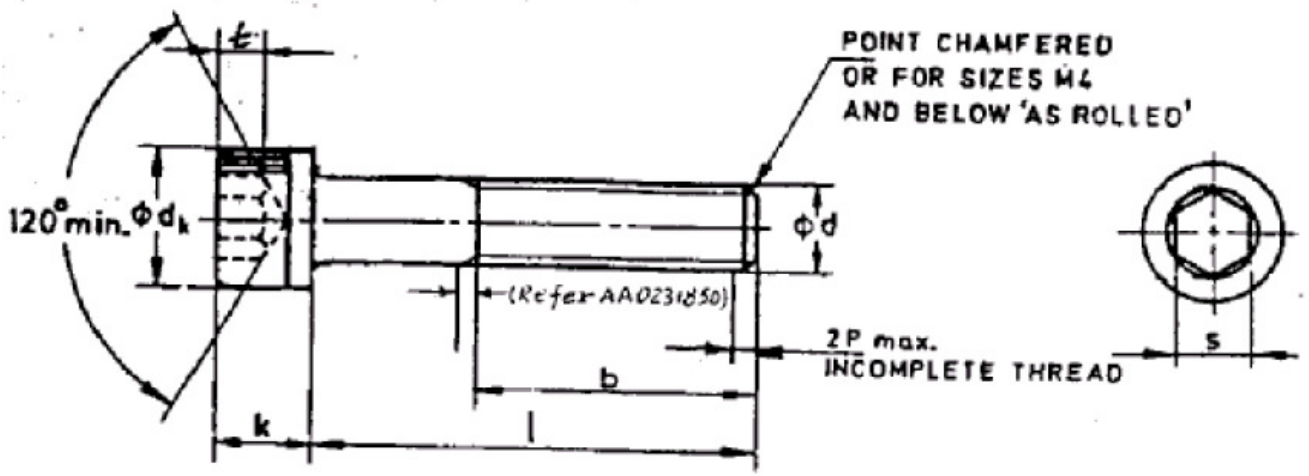

FIG . 1

CORPORATE STANDARD

AA7123123
Rev. No. 07
PAGE 3 of 3

Table 1

All dimensions are in mm

Note:
1) Corporate sub-code numbers only are shown in Table 1
2) Weights have been shown in kg per 1000 Nos.
3) For threaded runout refer AA0231850
4) Lengths above the thick dashed line are threaded to the headed within 3P

Size Nom. ϕd	Head Tkns Max. / Min. K	Head Dia. Max. / Min. ϕdk	Socket Across Flats Max / Min s	Socket Depth Min. t	Threaded length for ref. b		NOM LENGTH (L) 5	6	8	10	12	16	20	25	30	35	40	45	50	55	60	65	70	75	80	90	100	110	120	130	140	150	160	180	200
M 3	3	5.68	2.56	1.3	18	Sub-code																													
	2.86	5.32	2.52			Weight																													
M 4	4	7.22	3.08	2	20	Sub-code							387																						
	3.86	6.78	3.02			Weight																													
M 5	5	8.72	4.095	2.5	22	Sub-code				409			417																						
	4.82	8.28	4.02			Weight																													
M 6	6	10.22	5.095	3	24	Sub-code					018	026	034	042	050		063		077																
	5.7	9.78	5.02			Weight					5.03	5.73	8.53	7.64	8.75		10.09		12.2																
M 8	8	13.27	6.095	4	28	Sub-code						395	085	093	373	107	115		123			131													
	7.64	12.73	6.02			Weight							13.1	15.1	17.1	190	21		24.9			30.9													
M 10	10	16.27	8.115	5	32	Sub-code							140	158	166	433	174	441	182	450	190	204		212	468										
	9.64	15.73	8.025			Weight							22.5	25	28	31	34.7	37.3	40.3	43.4	46.5	49.5		55.7	58.9										
M 12	12	18.27	10.115	6	36	Sub-code							476	220	239		247	255	263			271	484			492									
	11.57	17.73	10.025			Weight							32.1	36	39.6		48.5	52.9	57.4			70.7	73.7												
M16	16	24.33	14.142	8	44	Sub-code									280		299		301					310			328								
	15.57	23.67	14.032			Weight									81.1		94.8		110.7					150			189								
M 20	20	30.33	17.23	10	52	Sub-code											336		344					352											
	19.48	29.67	17.05			Weight											186		188.4					250											
M 24	24	36.39	19.275	12	60	Sub-code													506		514		522			530	549				557				
	23.48	35.61	19.065			Weight															333		363			435									
M 30	30	45.39	22.275	15.5	72	Sub-code																			565	573				581					
	28.48	44.61	22.065			Weight																													
M 36	36	54.46	27.275	19	84	Sub-code																													
	35.3	53.54	27.065			Weight																													

File No. HEP-TPTNoMNX/19/2025-HEP-TXM20500 (Computer No. 198097)
Generated from eOffice by Kamal Singh Narvariya, MANAGER(KSN)-MNX35400-HEP, MANAGER, HEP-HEAVY ELECTRICALS PLANT (HEP) on 04/07/2025 09:30 am

बीएचईएल BHEL TSD 6208 B	**PLANT STANDARD BHOPAL**	BP 085 01 78 REV. NO. 02 PAGE 1 OF 3 SUPERSEDES BP 085 01 78 REV.01

MAGNETIC PARTICLE INSPECTION AND ACCEPTANCE STANDARD FOR CRITICAL FASTENERS

COPYRIGHT AND CONFIDENTIAL
The information on this document is the property of Bharat Heavy Electricals Limited, Bhopal.
It must not be used directly or indirectly in any way detrimental to be interest of the company

1. SCOPE :

This standard covers the visual and magnetic particle testing procedure and acceptance standards for fasteners used for critical applications e.g. Commutator Bolts, Main Pole Bolts, Axle Cap Bolts of Traction Machines etc., to detect surface defects.

Testing shall be carried out on Fasteners in the fully fabricated & heat –treated condition, if any.

2. TESTING PROCEDURE :

2.1 Surface Finish

Fasteners shall be free from dust, grease, oil etc.

2.2 Operating Personnel

The operator performing the testing shall be fully conversant with magnetic particle testing technique and the acceptance standards laid down.

2.3 Visual Examination

Fasteners shall be visually examined after cleaning its surface and any defects observed shall be recorded.

2.4 Magnetic Particle Inspection

2.4.1 Fasteners shall be magnetic particle tested to ASTM-E-709 (BHEL Corporate Standard AA 085 01 33 in general .

2.4.2 When alternating current is used for circular magnetization, using direct contact method, the following current range shall be used.

For Fasteners upto 125 mm diameter

140 – 180 Ampere per centimeter of the diameter.

For Fasteners above 125 mm diameter and upto 375 mm diameter

100 – 140 Ampere per centimeter of the diameter.

Revision : Reviewed & Brought upto date	Issued by : STANDARDS AND MATERIALS GROUP TECHNICAL SERVICES DEPARTMENT
Rev. 02 Date : 18.03.2010	Date of first Issue : June 1989

File No. HEP-TPTNOMNX/2025/HEP-TXM20500 (Computer No. 198092)
Generated from eOffice by Kamal Singh Narvariya, MANAGER(KSN)-MNX35400-HEP, MANAGER, HEP-HEAVY ELECTRICALS PLANT (HEP) on 04/07/2025 09:30 am

3. NON – DEESTRUCTIVE TESTING :

At Supplier's Works

100 Visual and magnetic particle testing as per clause 2 (above) shall be carried out at the Supplier's works and necessary test certificates shall be supplied, to BHEL.

Only fasteners which meet the Acceptance standards laid down in clause 4 (below) shall be dispatched to BHEL, Bhopal.

4. ACCEPTANCE STANDARDS :

Fasteners on testing, shall comply with the following requirements :

Any defect not specifically covered by this acceptance standard shall be referred to Technical Services Department, BHEL, Bhopal , for its approval.

4.1 Linear Indications

Any Linear Indication, transverse to the longitudinal axis of the fasteners is not acceptable.

4.2 Cracks

Cracks of any type, in any location irrespective of the dimension, is not acceptable,

4.3 Seams

4.3.1 Seams found in the threaded portion of the fastener is not acceptable irrespective of the dimensions.

4.3.2 Seams found on the shank portion shall not have a depth more than 0.03 X d, where 'd' is the nominal diameter of the fasteners.

4.4 Laps and Folds

Laps and folds of any depth or length are not acceptable, at the root of the threads.

If found, other than at the root of the threads, BHEL, Bhopal should be consulted, before dispatch of the material.

5 DEMAGNETISATION :

After the magnetic particle testing is over , demagnetization shall be carried out by using a suitable method.

6. PROTECTIVE COATING :

All fasteners after testing and demagnetization, shall be suitably protected by coat of rust preventive.

ANNEXURE - I

CHECK TEST AT BHEL WORKS

1) **SAMPLING :**

Random samples shall be taken, as detailed below, from each size and from each lot of fasteners, which have been supplied & certified as per clause 1 to 6 of this standard (Refer Page 1 & 2)

TABLE - A

For Established suppliers ('A' Class Suppliers)

Methods for sampling of fasteners, shall be following :

Sampling Plan Lot size Nos.	Sample Size Nos.	Acceptance No.
Upto 1000	5	0
Above 1000 upto 3000	8	0
Above 3000 upto 10,000	13	0
Above 10,000 upto 35,000	20	0
Above 35,000	32	1

TABLE – B

For other than Established suppliers / New Suppliers

The sampling size shall be double that of Table 'A' keeping the Acceptance Number same, as detailed below :

Sampling Plan Lot size Nos.	Sample Size Nos.	Acceptance No.
Upto 1000	10	0
Above 1000 upto 3000	16	0
Above 3000 upto 10,000	26	0
Above 10,000 upto 35,000	40	0
Above 35,000	64	1

2) **NON – DESTRUCTIVE TESTING :**

These samples shall be subjected to visual and magnetic particle examination as detailed in clause 2 (refer page 1)

3) **EVALUATION :**

The whole lot shall be accepted if the samples as mentioned in the above plans, (A and B) meet the acceptance standard mentioned in clause 4 (refer page – 2).

	CORPORATE STANDARD	AA7111124
		Rev No.08
		PAGE 1 of 3

BOLTS, HEXAGON HEAD, PRODUCT Gr: 'A' COARSE PITCH, STEEL, PROPERTY CLASS 8.8 (M20 – M24)

1.0 DISIGNATION:

A product Gr.A, hexagon head, steel bolt to M20, length 80 mm, coarse pitch and conforming to property class 8.8 shall be designated as:

1.1 On drawings:

i). Material specification column : AA7111124

ii). Description column : BOLT HEX A M20 X 80 – 8.8

1.2 On indents: Bolt Hex A M20 X 80 – 8.8: AA7111124

1.3 For issuing enquiries and on purchase orders:

While issuing enquiries and purchase orders, delete BHEL standard number from above description and add the information given under clause 2.0

2.0 COMPLIANCE WITH STANDARDS:

2.1 Dimensions, Tolerances & General Requirements:

As per IS 1364 : Part 1 : 20018

2.2 Mechanical Properties:

To conform to property class 8.8, as specified in Table-3 of IS 1367 : Part 3

2.3 Threads:

Pitch – Coarse to IS 4218 : Part 2

Tolerance quality – Medium

Tolerance class – 6g

2.4 Identification Marking: As stated in clause 10 of IS 1367 : Part 3

2.5 Surface Discontinuity: As per IS 1367 : Part 9 : Sec 1

2.6 Finish: Plated as specified in BHEL order.

COPYRIGHT AND CONFIDENTIAL
The Information on this document is the property of BHARAT HEAVY ELECTRICALS LIMITED.
It must not be used directly or indirectly in any way detrimental to the Interest of the company.

Revisions:			APPROVED: INTERPLANT MATERIAL RATIONALISATION COMMITTEE – MRC(F)		
Rev No.08	Amd No.	Reaffirmed	Prepared	Issued	Dt. of 1st Issue
Dt:20-03-2021	Dt:	Year:	HEEP, Haridwar	Corp.R&D	December1976

CORPORATE STANDARD

3.0 NOTE:

3.1 Length and diameter combination (refer Table 1 on page 3 of 3) between the bold lines should only be used.

3.2 For screw threads, general (Metric) refer to BHEL standard AA0231800

3.3 For tolerance grade, position and class refer to BHEL standard AA0230201

3.4 Bolts to this standard would be un-plated, divisions wishing to have plated bolts would have to get them plated.

3.5 Weights given in this standard are for general reference only and are not meant for commercial transactions.

3.6 When fasteners are to be tested with in BHEL, the sampling and acceptance plan shall be as per IS:1367, part 17

4.0 REFERRED STANDARDS (Latest publications including amendment):

1) AA0231850 2) IS 1367 : Part 3, 9 : Sec 1 & 17 3) IS 4218 : Part 2
4) AA0231800 5) AA0230201

EXPLANATORY NOTE

The following changes have been made in this revision:

- In Clause 2.1, year of IS updated to 2018
- In Clause 2.4, clause 10 in place clause 9.
- In Clause 2.5, applicable Section of IS added.

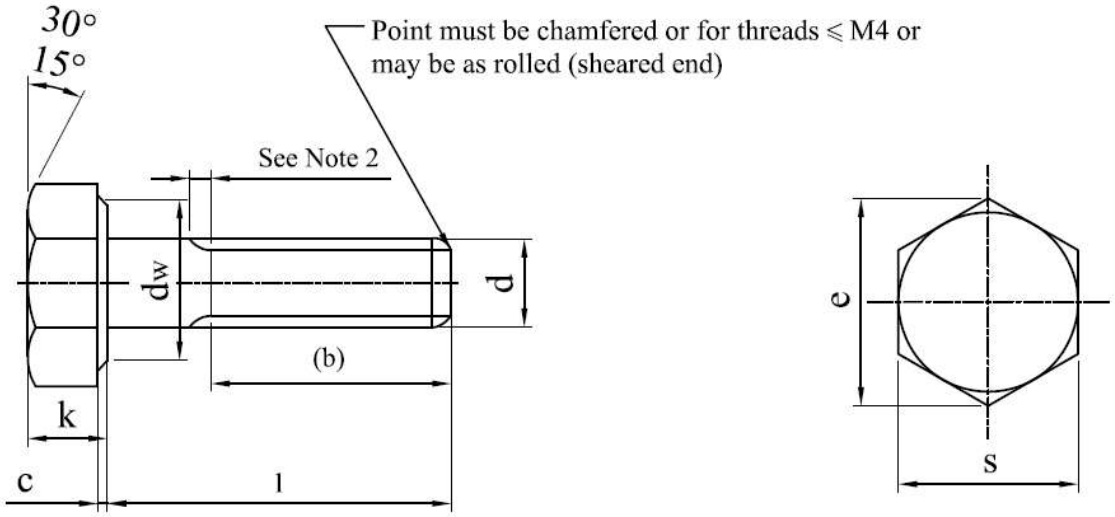

Note:

1) Corporate code numbers are shown below.
2) For thread runout refer AA0231850
3) Weights have been shown in kg per 1000Nos
4) Symbol Δ denotes non-preferred size.

TABLE–1 (All dimensions are in 'mm')

Thread Size d	Head			Washer		Thread Length b			Nominal Length (*l*)										
	Flats s Max. / Min	Crns e Min.	Tknss k Max. / Min.	Dia. dw Min.	Tknss c Max. / Min.	For Nom. Length ≤125	For Nom. Length >125 & ≤200		65	70	75	80	90	100	110	120	130	140	150
M 20	30.0	33.53	12.72	28.2	0.8	46	52	Sub Code	014 Δ	235 Δ	049 Δ	057	065	022	073	081		090	103
	29.67		12.28		0.2			Weight	220	232	243	255	282	307	331	356		392	428
M24	36.0	39.98	15.22	33.6	0.8	54	60	Sub Code	111 Δ			120 Δ	138	030	146	154	162		170
	35.38		14.78		0.2			Weight	330			384	419	455	490	526	560		629