COPYRIGHT AND CONFIDENTIAL
The information on this document is the property of BHARAT HEAVY ELECTRICALS LIMITED
It must not be used directly or indirectly in any way detrimental to the interest of the company

TECHNICAL SPECIFICATION OF GEAR DRIVE ASSEMBLY FOR METRO APPLICATION

Revision : 01 Date: 22/02/2024	Distribution	Qty.	Approved : (M.Verma)		
			Prepared by:	Checked by:	Date :
	TME TXM-Plg.	1 1	(M.Parothia)	(A.Sharma)	22/02/2024

COPYRIGHT AND CONFIDENTIAL
The information on this document is the property of BHARAT HEAVY ELECTRICALS LIMITED
It must not be used directly or indirectly in any way detrimental to the interest of the company

CONTENTS

Sl. No.	Description	Page no.
1	General	3
2	Scope of supply	3-4
3	Information to be provided by supplier (within 3 weeks after date of PO placement)	5-6
4	Operating environmental and climatic conditions	6-7
5	Technical requirements	7-9
6	Documents submission and supplier's responsibility	10-14
7	Type Test	14-15
8	Enclosures	16

COPYRIGHT AND CONFIDENTIAL
The information on this document is the property of BHARAT HEAVY ELECTRICALS LIMITED
It must not be used directly or indirectly in any way detrimental to the interest of the company

1. GENERAL

This specification governs the requirement for design, manufacturing and supply of gear drive assembly for use with BHEL traction motor for metro application in Indian Railways. The gear drive assembly should be reliable for operational speed of 80 kmph and should also be able to serve at a test speed of 90 kmph. Supplier shall clearly specify compliance of each clause of this specification in their offer. In case of any deviation w.r.t any clause of this specification, supplier should also specify the same in their offer.

2. SCOPE OF SUPPLY

Scope of supply for gear drive assembly kit to be assembled on axle at ICF, Chennai (train manufacturer) shall be as given below in the table. Gear drive kit shall be in painted condition on un-machined surfaces & temporary rust preventive applied on machined surfaces**:**

Sl. No.	Component	Qty. per gear drive assy.	Remarks
1	**Gear drive assembly consisting of:**		
1.1	Main driving gear along with pinions	1 set	
1.2	Input Shaft for pinion & half coupling mounting	1 no.	
1.3	Gear drive housing	1 no.	
1.4	Other gear drive assembly components viz. Labyrinths, Seals, Fasteners, Reaction rod mounting bush (elastomer), 'O' rings, Bearings etc. required for complete gear drive assembly	1 set	
1.5	Reaction rod along with items required for mounting of reaction rod on gear drive housing and bogie.	1 set	
1.6	Rubber items (elastomer) for mounting of Reaction rod on gear drive housing and bogie.	1 set	
1.7	Gear drive half coupling (flexible)	1 no.	
1.8	Traction motor half coupling (flexible)	1 no.	
1.9	Fasteners required for joining half couplings.	1 set	

COPYRIGHT AND CONFIDENTIAL
The information on this document is the property of BHARAT HEAVY ELECTRICALS LIMITED
It must not be used directly or indirectly in any way detrimental to the interest of the company

Sl. No.	Component	Qty. per gear drive assy.	Remarks
2	**Assembly of Gear drive assembly on axle and bogie at ICF, Chennai (train manufacturer)**	Assembly of Gearbox on axle and bogie has to be carried out by gear drive manufacturer ***at ICF, Chennai*** (train manufacturer works). The axle for the same shall be provided by ICF. All tools/facility/press/heater etc. required for installation has to be arranged by Gear drive manufacturer on returnable basis. Supplier can take back the tools after installation.	

NOTE: Necessary support shall be provided by supplier for the following:

1) Submission of design documents (to BHEL) as mentioned in clause 6.2 of this specification.
2) Clarification to RDSO queries, discussion with RDSO for finalization and approval of design documents of gear drive assembly.

COPYRIGHT AND CONFIDENTIAL
The information on this document is the property of BHARAT HEAVY ELECTRICALS LIMITED
It must not be used directly or indirectly in any way detrimental to the interest of the company

3. INFORMATION TO BE PROVIDED BY SUPPLIER (WITHIN 3 WEEKS AFTER DATE OF PO PLACEMENT)

a. Supervision & training required for assembly/disassembly, testing & commissioning of gear drive assembly:

Sl. No.	Details
1	Drive system testing at BHEL Bhopal:
	a. Training at BHEL Bhopal for alignment of coupling halves of motor & gear drive for witnessing of drive system testing (with actual motor, converter, inverter at variable speed & torque) by customer (RDSO).
	b. Training at BHEL Bhopal for assembly & dismantling of gear drive assembly.
2	Any other training required for maintenance & overhauling.

b. Tools required for assembly, disassembly & testing:

Sl. No.	Details	Requirement
1	Special tools, fixtures, gauges, templates, special equipment etc. required for following activities:	List of tools, fixtures, gauges, templates, special equipment shall be provided
	1.1) Assembly and disassembly of gear drive assembly on axle.	
	1.2) Assembly and disassembly of other gear drive assembly components (i.e. half couplings, reaction rod, elastomers etc.) on gear drive assembly.	
	1.3) Alignment of coupling halves.	
	1.4) Quality inspection of components, sub-assemblies and gear drive assembly	
2	Any other special fixture/arrangement/castor wheels for storage & transportation.	

COPYRIGHT AND CONFIDENTIAL
The information on this document is the property of BHARAT HEAVY ELECTRICALS LIMITED
It must not be used directly or indirectly in any way detrimental to the interest of the company

c. Consumables required for assembly/disassembly, commissioning & maintenance:

Sl. No.	Consumables	Requirement
1	Consumables viz. grease, thread locker, oil etc. required for following activities related to assembly/ installation, disassembly & inspection of gear box and its components.	Supplier to provide the make, type and quantity of consumables required for assembly of each gear drive assembly on axle.
	1.1) Assembly and disassembly of gear drive assembly on axle.	
	1.2) Assembly and disassembly of other gear drive assembly components (i.e. half couplings, reaction rod, elastomers etc.) on gear drive assembly.	
	1.3) Alignment of coupling halves.	
	1.4) Assembly of gear drive assembly on bogie.	
2	Shims required for adjustment / levelling of gear drive w.r.t motor / alignment of coupling halves.	Supplier to provide the details and tentative quantity of shims required for adjustment/ levelling of 1 set of gear drive w.r.t motor.

d. List of spares, must change items during scheduled maintenance (minor and major overhaul) and consumables required for satisfactory maintenance and operation of gear drive assembly for a period of 10 years.

4. OPERATING CLIMATIC AND ENVIRONMENTAL CONDITIONS

The gear drive assembly shall be designed suitably to ensure its normal working under following adverse climatic and environmental conditions:

i. **Relative Humidity:** up to 98% saturation during monsoon season.
ii. **Ambient temperature** max. : 50º C
min. : 0º C
iii. **Altitude (Max)**: coastal area (9 m)
iv. **Rainfall:** Heavy and continuous at any rate upto 370 mm in 24 hours (up to 2200mm during rainy season).The max. wind velocity is 145 kmph.

COPYRIGHT AND CONFIDENTIAL
The information on this document is the property of BHARAT HEAVY ELECTRICALS LIMITED
It must not be used directly or indirectly in any way detrimental to the interest of the company

v. **Flooding**: The gear drive assembly shall be designed to permit propulsion of train at 10 km/h through water up to a depth of 75 mm above rail level. The gear drive assembly shall be splash proof in accordance with International Standards.

vi. **Atmosphere during hot weather:** Extremely dusty, humid and salty. The MRS (metro rolling stock) shall be working in coastal area and thus shall be continuously exposed to highly corrosive, salty atmosphere along with industrial pollutants.

vii. MRS shall work both in underground tunnel which is kept cool and on elevated track exposed to ambient having high temp. Thus gear drive assembly shall be designed considering rapid fluctuations in temperature.

viii. Special care shall be taken to ensure no damage to gear drive assembly due to deposition of atmospheric salts and industrial pollutants. Supplier shall enclose the details of specific measures adopted to ensure the satisfactory working of gear drive assembly against the deposition of salts & industrial pollution.

5. TECHNICAL REQUIREMENTS

5.1 Gear Drive Assembly

i. The gear drive assembly shall be of proven design for same or higher traction/braking transmission.

ii. The gear drive assembly shall be totally enclosed and free from lubricant leakage.

iii. The tractive/braking effort shall be directly transferred from the input pinion to wheel gear. The torque transmission arrangement of gear drive assembly shall be simple and suitable for both traction and braking forces.

iv. The gear drive assembly design shall be suitable for climatic and environmental conditions as specified in clause no. 4 of this specification. Special care shall be taken in design with respect to high track vibrations as mentioned in clause 5.2.

v. The gear drive assembly design documents as per clause 6.2 shall be furnished and finalized during design approval by RDSO Lucknow. The suitability of gear drive assembly should be proved in a type test.

vi. The gear drive shall be compatible with the flexible coupling. Gear drive assembly movements shall be restrained by a torque reaction link between the gear drive and bogie frame. A safety device shall be incorporated to restrain gear drive rotation shall the link fail in service.

vii. The gear drive assembly shall not require overhaul at least earlier than 0.8 million kilometres.

viii. The external items of gear drive assembly viz. rubber items, paint etc. shall comply with standard EN 45545 HL-2/ HL-3 for fire safety.

COPYRIGHT AND CONFIDENTIAL
The information on this document is the property of BHARAT HEAVY ELECTRICALS LIMITED
It must not be used directly or indirectly in any way detrimental to the interest of the company

5.2 Vibrations

Gear drive assembly complete along with flexible coupling shall be so designed that its performance is not adversely affected due to vibration and shock as per EN13749:2021 with sufficient factor of safety. Factor of safety kept by supplier in other proven gear drive assembly designed & supplied earlier shall be provided.

5.3 Coupling

i. The coupling shall compensates radial, axial and angular misalignments between motor and gear drive assembly. The coupling design and the motor to gear drive assembly mounting arrangement shall minimize coupling dynamic angular displacement.
ii. The coupling should be suitable for operation at speed of 3600 rpm.
iii. The coupling should be able to withstand the maximum level of shocks of magnitude as per EN13749:2021.
iv. The sealing system should be adequate to prevent dirt/dust and water into couplings.
v. The coupling shall be grease lubricated.
vi. Slipping bush shall be installed at the gear box side to protect the gearbox of too high shock torques that can be generated in the motor in case of a converter short circuit.
vii. The coupling shall be insulated to ensure that the gearbox bearings are not affected by discharging currents of the rotor.

5.4 Gears and Pinion

i. Gear & pinion should be produced from case hardened alloy steel and complying with national/international standards of gears & pinion being used in traction application.
ii. The MTBF for the pinion should at least be 1 million kms and for the gear wheel at least 2 million kms.
iii. Gear ratio of 6.053 is to be used for gear drive assembly in metro application.
iv. Supplier shall submit proof of stability for gear tooth forming and total design (i.e. design documents mentioned in clause 6.2), description of the gear tooth forming, used materials, manufacturing and hardening procedures with corresponding specifications, Oil types, lubrication process and lubrication intervals.
v. Gear & Pinion used in gear drive assembly shall be guaranteed against any failure for a period of 6 years from the date of supply.

COPYRIGHT AND CONFIDENTIAL
The information on this document is the property of BHARAT HEAVY ELECTRICALS LIMITED
It must not be used directly or indirectly in any way detrimental to the interest of the company

5.5 Gear drive housing

i. Gear drive housing shall be made of proven material and shall have sufficient mechanical strength so as not to get damaged due to hitting by ballast or any other foreign objects at high speed during run. Supplier may use alloys, which have been used for traction application and has been validated and time tested. Aluminium should not be used anywhere in the gear drive housing. The use of heli-inserts in the threaded holes for fastening of bolts shall not be permissible. The gear drive housing shall be totally enclosed and free from lubricant leakage during operation.
ii. The gear drive housing shall be totally enclosed and free from lubricant leakage during operation.
iii. The quantity of oil in the housing and its replenishment/replacement period shall be provided in the maintenance manual. It shall not be necessary to change the oil earlier than 200,000 km. The lubrication points of gear drive housing shall be easily accessible. The oil recommended for use in gear drive housing shall be of Indian make available readily in India.
iv. Gear drive housing and its sealing arrangement shall be designed in such a way that there should not be any ingress of water inside gear drive assembly upto a height of 75 mm from rail level.
v. Oil level indicators/markers shall be provided to monitor oil level in housing.
vi. Gear drive assembly shall be suitably painted (light grey colour) to prevent any deterioration of surface due to operation in extremely dusty, humid & salty conditions for most part of the year.

5.6 Bearings

i. Details of the fits kept in the bearings of gear drive assembly should be furnished during design documents approval by RDSO.
ii. L10 life of gearbox bearings shall not be less than 6 million kilometres for both pinion side and gear side. L10 life calculation report for complete duty cycle shall be submitted.

5.7 Mounting and suspension arrangement

i. Suitable reaction rod mounting bush (elastomer) shall be provided for suspension of gear drive housing.
ii. The mounting bolts/nuts shall be accessible for easy mounting and dismounting during maintenance.

5.8 Packing

Gear drive assembly shall be suitably packed to avoid any damage during transit.

COPYRIGHT AND CONFIDENTIAL
The information on this document is the property of BHARAT HEAVY ELECTRICALS LIMITED
It must not be used directly or indirectly in any way detrimental to the interest of the company

6. DOCUMENTS SUBMISSION AND SUPPLIERS RESPONSIBILITY

6.1 The supplier shall submit the following documents along with their techno-commercial offer:

i. **For gear drive assembly supply experience**:
Reference of projects executed for similar applications during the last 10 years wherein supplier has designed, manufactured and supplied at least 240 no. of gear drive assembly (suitable for mounting with fully suspended motor) for Railway stock speed of 90 KPH or more. Firm should submit necessary supporting credentials i.e. document in support of maximum operational speed of gear drive assembly and PO/Invoice/Contractual document/Any other documentary proof in support of supply of 240 sets of gear drive assembly (if required, financial details may be hidden).

ii. **For flexible coupling supply experience**:
   a. Reference of projects executed for similar applications during the last 10 years wherein supplier/supplier's source of flexible coupling has designed, manufactured and supplied at least 240 no. of flexible coupling (both motor half & gearbox half) for gear drive assembly for Railway stock speed of 90 KPH or more. Firm should submit necessary supporting credentials i.e. document in support of maximum operational speed of gear drive assembly and PO/Invoice/Contractual document/Any other documentary proof in support of supply of 240 nos. of flexible coupling (if required, financial details may be hidden).
   b. Supplier to confirm that coupling supplied shall be of same make for which experience details are submitted as clause 6.1 {ii (a)} above.

iii. OGA drawing of the offered gear drive assembly.

iv. Separate offer for tentative price (budgetary quotation) of training & tools required as per clause no. 3.a & 3.b of this specification.

6.2 Supplier shall submit the design documents of gear drive assembly along with required technical data and calculations to BHEL Bhopal (for further submission to RDSO for approval) within 4 weeks after date of PO placement and shall be completed within 5 months of PO placement. Design documents shall comprises of following:

i. Detailed outline drawing indicating weight and centre of gravity.

COPYRIGHT AND CONFIDENTIAL
The information on this document is the property of BHARAT HEAVY ELECTRICALS LIMITED
It must not be used directly or indirectly in any way detrimental to the interest of the company

Note: Outline drawing shall be submitted to ICF by BHEL for fitment clearance of gear drive assembly on bogie. Based on ICF feedback, modification in fitment dimensions may be required to be done. Supplier to carry out the modifications.

ii. General assembly/long section drawing with exploded view and complete bill of material.
iii. 3D model of external envelope of complete gear drive assembly.
iv. Type of gear and pinion, grade of steel used and particulars of heat treatment.
v. Outline drawing of gear & pinion with relevant data required from fitment and maintenance point of view and deciding the usability/condemning limit like chord over teeth ('k' value) etc.
vi. Drawings along with dimensions required from maintenance point of view.
vii. Material and type of construction of gear drive housing.
viii. Strength calculation for gear and pinion.
ix. Calculation report (bearing, gearing, safety nose, reaction rod, connection gear drive - reaction rod, shrink fit of gear axle).
x. Details of fits used in assembly of different components of gear drive assembly including gear, pinion, bearings etc.
xi. The supplier shall submit finite element analysis (FEA) report in all 3-axis which includes stress analysis, fatigue analysis, modal analysis and harmonic analysis of complete gear drive assembly including sub-components considering boundary conditions for vibration & shocks as per EN13749:2021. Factor of safety kept by vendor in other proven gear drive assembly (details provided by supplier against clause 6.1) designed & supplied earlier shall be considered for FE analysis.
Note: Any other additional boundary conditions for FEA desired by RDSO shall be suitably incorporated in the FE analysis.
xii. Make & type of bearings, L-10 life calculation of bearings for complete duty cycle and life span of bearing while considering the axle deflection.
xiii. Make & type of lubrication compound of gear drive assembly and bearing grease along with their technical datasheet. Quantity for initial fill of lubricant and refill along with periodicity of refilling shall also be indicated.
Note: The lubricant recommended for use in gear drive assembly shall be made in India.
xiv. Quality Assurance Plan of complete gear drive assembly including gear & pinion.
xv. Reliability prediction calculations (RAMS, LC etc.) complying the requirements of clause 5.4 (ii) of this specification.

COPYRIGHT AND CONFIDENTIAL
The information on this document is the property of BHARAT HEAVY ELECTRICALS LIMITED
It must not be used directly or indirectly in any way detrimental to the interest of the company

xvi. Source for flexible coupling.
Note: The flexible coupling selected shall be such that vibration coming on motor from gear drive shall not adversely affect the performance of the complete system (motor & gear drive).

xvii. Motor shaft dimensions (length, taper, diameter etc.) for sitting of half coupling as shown in Annexure-2. The half coupling mounted on motor shaft shall be suitable designed suiting to shaft dimensions.

xviii. Test schedule & format for type and routine test (with acceptance limit of each parameter).

xix. Documents detailing assembly procedure of gear drive assembly complete on axle with suitable photographs/views.

xx. Documents detailing assembly procedure of reaction rod on gear drive housing & bogie with suitable photographs/views.

xxi. Documents detailing assembly procedure of half coupling on traction motor & gear drive with suitable photographs/views.

xxii. Documents detailing procedure for alignment of coupling halves with suitable photographs/views.

xxiii. Maintenance manual of gear drive assembly.

xxiv. The supplier shall provide the certificate for external items of gear drive assembly viz. rubber items, paint etc. for complying with standard EN 45545 HL-2/ HL-3 for fire safety.

Note:

i. The approval/clearance of design documents of gear drive assembly shall be given by customer RDSO, Lucknow.
ii. All the documents submitted by the supplier shall be in English language.
iii. Any other documents besides above, if desired by RDSO during design documents approval, shall also be submitted.
iv. Supplier shall be required to depute his technical experts to RDSO for discussions, finalization and approval of design documents of gear drive assembly.

COPYRIGHT AND CONFIDENTIAL
The information on this document is the property of BHARAT HEAVY ELECTRICALS LIMITED
It must not be used directly or indirectly in any way detrimental to the interest of the company

6.3 Installation and Commissioning:

A. At ICF (Mounting of gear drive assy. on axle):

i. Installation of gear drive assembly complete on axle at ICF, Chennai will be in the scope of geardrive manufacturer.
ii. The supplier shall submit assembly procedure, inspection check sheets etc. for proper installation of gear drive assembly complete.
iii. Any special tools, fixtures, gauges, templates, special equipment etc. required for assembly / installation, inspection & testing of gear drive components with axle shall be arranged by the supplier as per clause 2, Sl. No. 2 of this specification on returnable basis.

B. At BHEL Bhopal:

i. Supplier shall provide assembly procedure of half coupling on traction motor.

C. At ICF (Mounting of assembled gear drive with axle on bogie):

i. The supplier shall submit detailed instructions for adjustment / levelling of gear drive w.r.t motor / alignment of coupling halves, assembly of reaction rod and any checking to ensure proper alignment of coupling halves.
ii. Special tools, fixtures, gauges & shims required for adjustment / levelling of gear drive w.r.t motor / alignment of coupling halves and assembly of reaction rod on bogie shall be arranged by the supplier as per clause 2, Sl. No. 2 of this specification on returnable basis.
iii. For initial 4 bogies (consisting of 8 gear drive assy. sets), during alignment of coupling halves, supplier shall depute its experts to supervise, train/ guide at ICF.

COPYRIGHT AND CONFIDENTIAL
The information on this document is the property of BHARAT HEAVY ELECTRICALS LIMITED
It must not be used directly or indirectly in any way detrimental to the interest of the company

6.4 Maintenance:

i. The supplier shall submit maintenance manual for the gear drive assembly containing following details:

a. Write up on the working of gear drive assembly.
b. The dimensional drawing of complete gear drive assembly (including flexible coupling) with technical data.
c. The detail functioning of each item and its sub-assembly.
d. Part list of components used in gear drive assembly.
e. Assembly & disassembly procedure of gear drive assembly along with drawings indicating usage of special tools.
f. Fitment procedure of half couplings on traction motor & half coupling.
g. Testing procedure of gear drive assembly.
h. Maintenance instructions for inspection, troubleshooting and recommended maintenance schedule (minor and major periodic overhauling).
i. List of special tools & instruments required for assembly, disassembly & maintenance.
j. List of spares, must change items during scheduled maintenance and consumables.
k. Storage and Transportation instructions.

ii. The supplier shall be responsible for carrying out improvements and modifications on the gear drive assembly supplied, in case any repetitive issues are observed during service (provided such modifications/ improvements are necessary for meeting the requirements of reliability, performance and safety etc., jointly with Indian Railways/RDSO Lucknow).

7. TYPE TEST

The type test (dimensional, material and other necessary tests) of individual items of gear drive assembly and complete gear drive assembly shall be in the scope of supplier. The supplier shall have in-house testing facility for the same. During testing, designed load and working conditions shall be simulated. The product shall conform to the designed parameters with respect to its application, efficacy and effectiveness. Axle & other test equipments for type testing by supplier, shall be in the scope of supplier.

COPYRIGHT AND CONFIDENTIAL
The information on this document is the property of BHARAT HEAVY ELECTRICALS LIMITED
It must not be used directly or indirectly in any way detrimental to the interest of the company

Following tests shall be done as a part of type test of gear drive assembly:

i. Dimensional, material & other necessary inspection of gear drive assembly items viz. gear, pinion, housing etc.
ii. Name plate verification
iii. Weight measurement of complete gear drive assembly including coupling half and without axle, traction motor & oil in gear drive housing.
iv. Dimensional inspection of gear drive assembly including axial & radial clearances of bearings, backlash, push on length gear coupling half gear drive side and other dimensions.
v. Oil level inspection
vi. Oil leakage verification from gear drive housing.
vii. Oil splashing verification
viii. Vibration, sound level measurement and temperature rise test in load condition (at starting torque, both clockwise & counter clockwise directions).
ix. Vibration, sound level measurement and temperature rise test in load condition (at continuous rating, both clockwise & counter clockwise directions).
x. Vibration, sound level measurement and temperature rise test in load condition (at one hour rating, both clockwise & counter clockwise directions).
xi. Vibration, sound level measurement and temperature rise test in load condition (at maximum operating motor speed, both clockwise & counter clockwise directions).
xii. Water tightness test.
xiii. Gear drive oil analysis.
xiv. Visual inspection of gear & pinion contact pattern and condition of bearings and other components.
xv. Inspection of interference fit details of components of gear drive system.

COPYRIGHT AND CONFIDENTIAL
The information on this document is the property of BHARAT HEAVY ELECTRICALS LIMITED
It must not be used directly or indirectly in any way detrimental to the interest of the company

8. ENCLOSURES

i. Annexure-1 as input datasheet required for design of gear drive assembly.
ii. Annexure-2 as motor shaft details for half coupling fitment.
iii. Annexure-3 as preliminary BHEL drawing no.14450007002 rev.01 of gear drive assembly.
iv. Annexure-4 as ICF drawing no. MRM/MC-0-0-001 of bogie general arrangement.
v. Annexure-5 as ICF drawing no. MRM/MC-0-0-002 of Reaction rod fixing arrangement.
vi. Annexure-6 as drawing no. AAA02048 of axle.
vii. Annexure-7 as drawing no. 65202002 of axle wheelset.
viii. Annexure-8 as duty cycle for bearing life calculation.

Annexure-1

Input datasheet for design of Gear drive assembly		
General Data:		
1	End Customer	Indian Railways
2	Application	Kolkata Metro
3	Location	Chennai , India
Vehicle:		
1	Type of rail vehicle	Metro
2	Electrical drive type	IGBT based 3 phase drive
3	Bogie configuration (eg. Fully, partly etc.)	BO-BO
4	Axle or Wheel drive	Axle drive
5	Allowable sound power level [dB(A)]	110 dB(A)
6	Vehicle life (year)	25 years
7	Environment temperature (°C)	0°C (Minimum)
8	Environment temperature (°C)	50°C (Maximum)
9	Service speed (worn wheels) (km/h)	80 Km/h (Maximum)
10	Test speed (new wheels) (km/h)	90 Km/h (Maximum)
11	Number of bogies	16
12	Number of motor bogies	8
13	Axle load (kg)	17000 kg (Maximum)
14	Wheel diameter new (mm)	860 mm
15	Wheel diameter worn (mm)	780 mm
16	Track gauge (mm)	1676 mm (Broad gauge)
17	Truck wheel base (mm)	2450 mm
18	Daily running (km)	600
Drive gear assembly:		
1	Drive concept	Traction motor fully suspended in bogie frame
2	Final drive gear type	Preferably helical
3	Number of Gear drive assembly per Bogie	2
4	Number of Gear drive assembly per Motor	1
5	Overall gear ratio	6.053
6	First stage gear ratio	6.053
7	Efficiency	98%
8	Weight (kg)	420±3% kg
9	Rail clearance at fully worn wheel	80 mm (Minimum)
10	Gear drive suspension type (fully or partially)	Partially
11	Axle diameter (between wheels)	170 mm (Refer annexure-6)
12	Axle diameter for Gearwheel sitting (mm)	212u6 mm (Refer annexure-6)
13	Axle diameter for gearbox bearings sitting (mm)	210p6 mm (Refer annexure-6)
14	Range of centre distance between axle C/L & motor shaft C/L	346-350 mm (Refer annexure-3)
15	Pinion offset (Position of motor shaft C/L above axle C/L)	0 mm above axle C/L (Refer annexure-3)
16	Distance between C/L of gear drive & C/L bogie (mm)	538 mm (Refer annexure-6)
17	Distance to bottom of gear drive from axle C/L (mm)	310 mm (Maximum) (Refer annexure-3)
18	Distance to top of gear drive from axle C/L (mm)	330 mm (Maximum) (Refer annexure-3)

19	Distance between end of flexible coupling (face towards motor side) and gear drive assembly pinion side (including all possible movements) (mm)	583 mm (Maximum) (Refer annexure-3)
20	Width of Gear drive assembly sitting on axle	358 mm (Maximum) (Refer annexure-3)
21	Length of Gear drive assembly upto safety catch from C/L of axle (mm)	576 mm (Maximum) (Refer annexure-3)
22	Horizontal distance of bogie connection point of reaction rod (in relation to wheel axle centre) (mm)	515 mm (Refer annexure-5)
Traction motor:		
1	Motor manufacturer	BHEL
2	Motor type	3-phase AC Induction motor
3	Motor weight (kg)	900±5% kg
4	Motor shaft end	Enclosed as annexure-2
5	Motor maximum power (motoring) (kW)	297
6	Motor maximum power (braking) (kW)	235
7	Motor continuous power (kW)	205
8	Motor continuous torque (Nm)	1392
9	Motor continuous speed (min^{-1})	1870
10	Motor maximum speed (min^{-1})	3131
11	Maximum starting torque (Nm)	2370
12	Maximum braking torque (Nm)	1720
13	Motor short circuit torque (Nm)	12000
Bogie primary suspension movement		

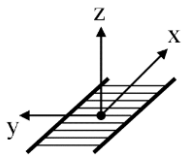

X (longitudinal) to mechanical stop + tolerances [mm]
Y (lateral) to mechanical stop + tolerances [mm]
Maximum dynamic and continuous dynamic movement values for X and Y directions.
Z (vertical) [mm] – distances A, B to mechanical stops + tolerance of stop position along with E, C and D.

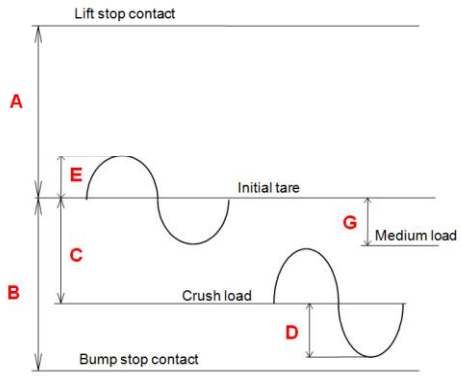

Primary suspension (including bogie tolerances)				
Drive shown in position	Z=0 mm			
	Static		Dynamic	
Z (bump stop)	-32 ± 3 mm			
Z (lift stop)	+35 ± 5 mm			
Z	AW0 (tare) = 0 mm (5%)	AW1 = 2.3 mm (10%)	AW0 (tare) = ± 7 mm	AW1 = ±7.1 mm
	AW3 = 14.6 mm (40%)	AW4(crush) = 16.9 mm (45%)	AW3 = ±8.2 mm	AW4(crush) = ±8.4 mm
X	± 6 mm		± 6 mm	
Y	± 6 mm		± 6 mm	

Annexure-2

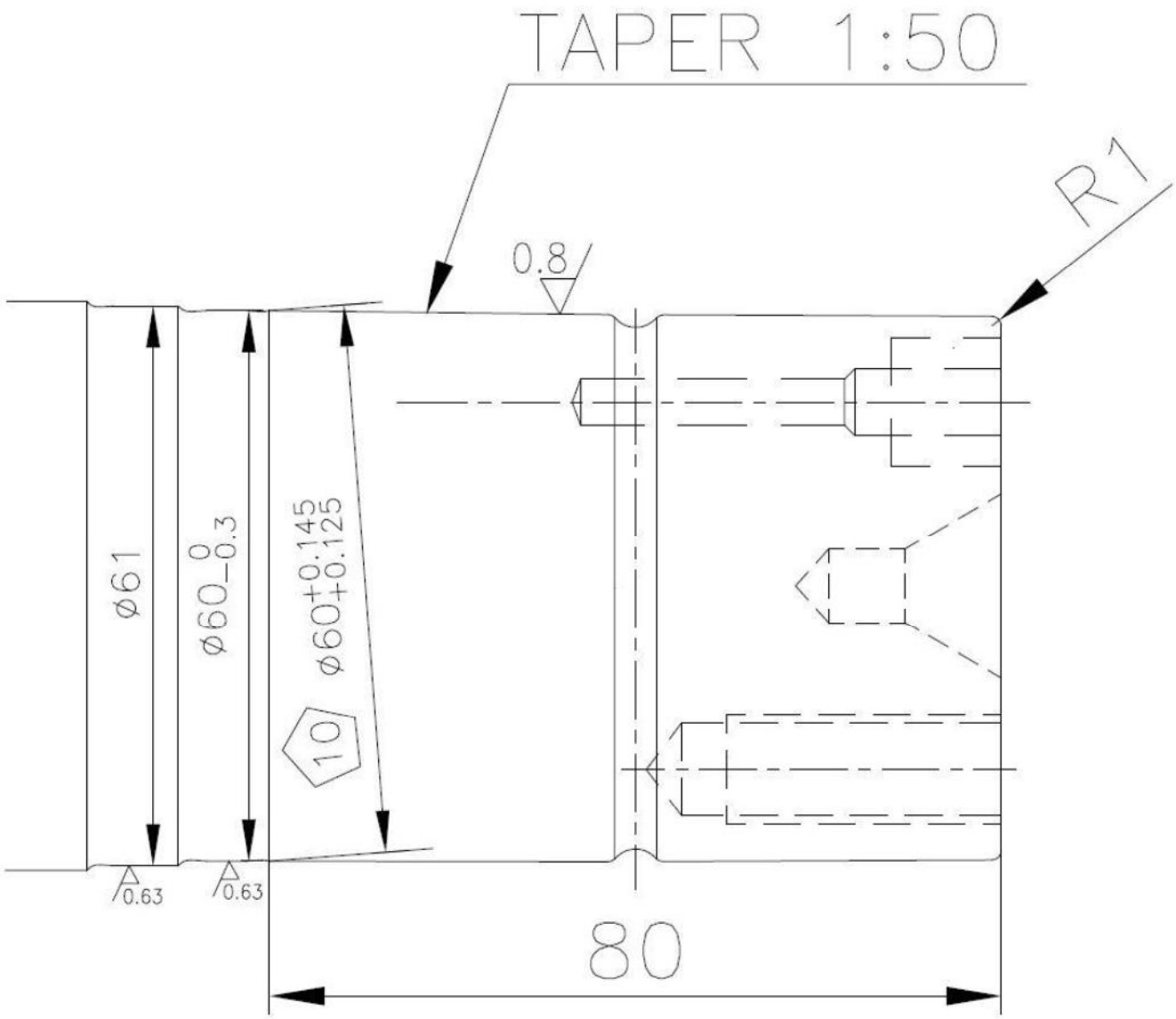

Shaft Taper Details

Annexure-8

Duty Cycle (IM2701)			
Load cycle and speed time relation for L10 life calculation			
Metro Speed (in Kmph)	Motor Speed (RPM)	Torque (N-m)	% of total running time of Metro train
0-10	0-391	2370-2370	5%
10-30	391-1174	2370-2300	35%
30-60	1174-2348	2300-900	20%
60-80	2348-3131	900-475	40%