FIRST ANGLE PROJECTION

(ALL DIMENSIONS ARE IN mm)

DRG. NO. 24454303003

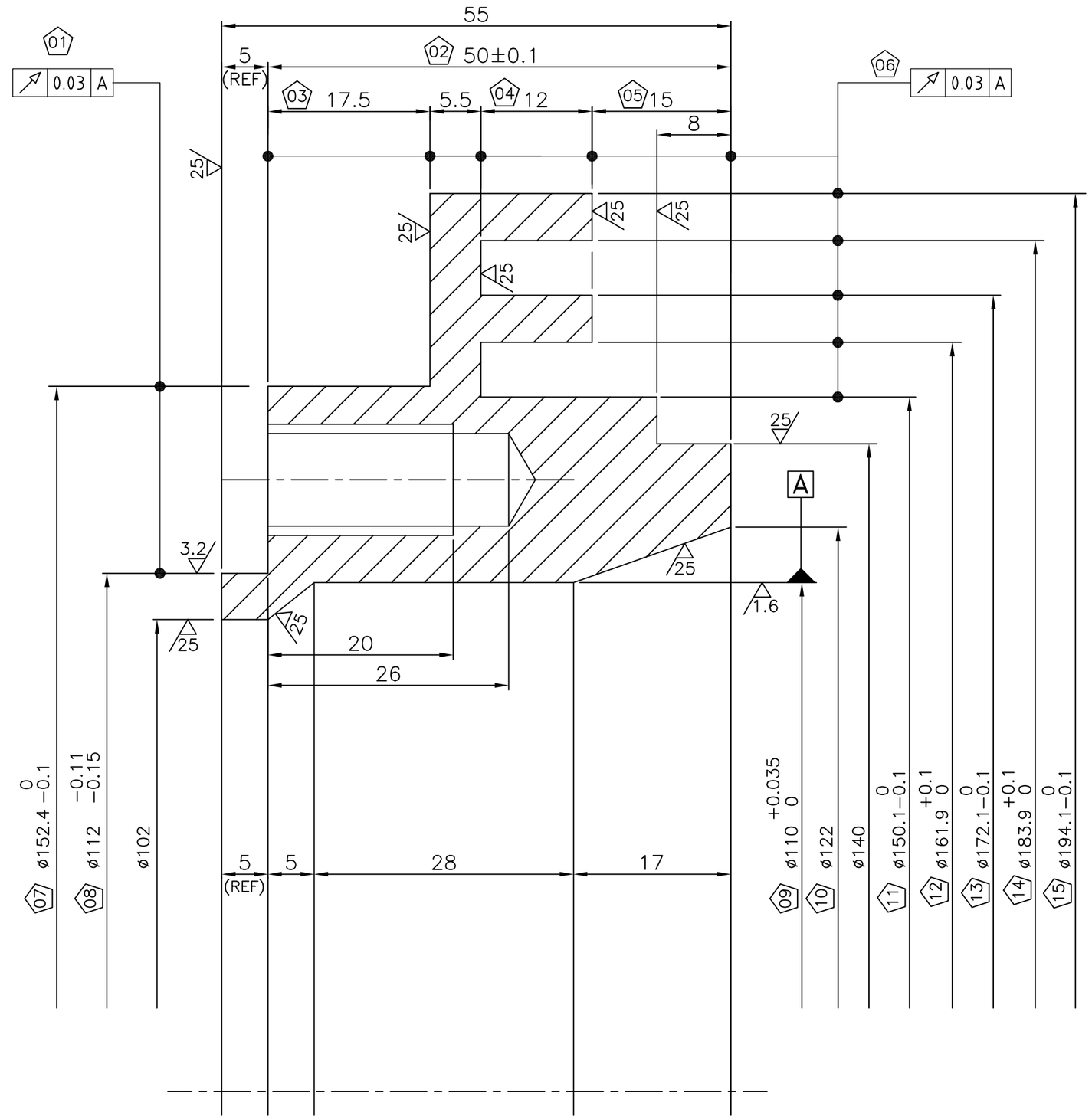

ENLARGED VIEW OF SECTION 'AA'

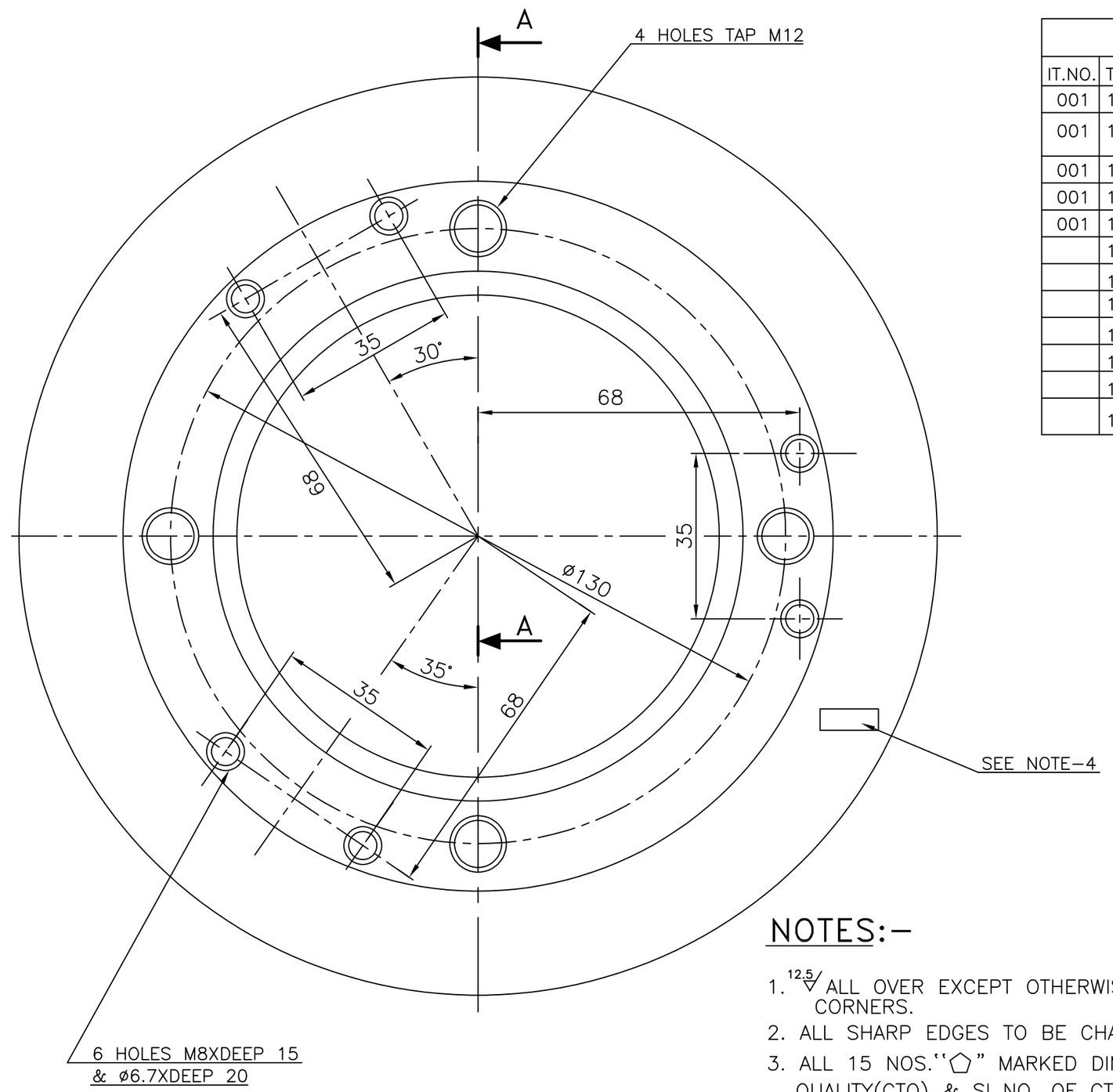

TOOL LIST

IT.NO.	TOOL NO.	DESCRIPTION
001	1410639	PIN GAUGE 109.635
001	1410640	GROOVE DEPTH GAUGE 5.95±0.05
001	1410641	CHAMFER GAUGE
001	1410642	SNAP GAUGE 55±0.1 MM
001	1410643	D.J. FOR ALL HOLES
	1411033	SNAP GAUGE 194.1−0.1
	1411034	SNAP GAUGE 150.1−0.1
	1411035	PIN GAUGE 110+0.035
	1411036	SNAP GAUGE 172.1−0.1
	1411037	SNAP GAUGE 152.4
	1411038	SNAP GAUGE 50±0.1
	1411039	SNAP GAUGE 112 −0.11 −0.15

NOTES:−

1. 12.5 ALL OVER EXCEPT OTHERWISE STATED, REMOVE SHARP CORNERS.
2. ALL SHARP EDGES TO BE CHAMFERED TO 0.2−0.3x45°.
3. ALL 15 NOS. "⬠" MARKED DIMENSIONS ARE CRITICAL TO QUALITY(CTQ) & SL.NO. OF CTQ DIMENSIONS ARE INSCRIBED IN ⬠ e.g. (15).
4. IDENTIFICATION MARKING TO BE DONE AS PER TM12548 AT THE LOCATION SHOWN.
5. QUALITY CHECKING TO BE DONE AS PER TM12545.
6. TEMPORARY RUST PREVENTIVE (TRP) TO BE APPLIED ON MACHINED SURFACES AS PER AA55152.

VAR00	REMARKS	VAR. NO.	ITEM NO.	DESCRIPTION	STD	DRAWING NO.	IT.NO.	MATL. CODE	VAR.	MATL. SPCN.	UNIT	UNIT WT.	QTY.	GS	ZONE
001	RAW.WT−13.6		001	OIL THROWER INNER	1			AA19332			NA	KG	4.1		

28 → CARD TYPE-3 | 28 → CARD TYPE-1 | 28 → CARD TYPE-2

ADDITIONAL INFORMATION

STATUS OF DRAWING

DISTRIBUTION OF PRINTS
TME−1
TXM−3
TNX(TXM)−1

TYPE OF PRODUCT OR NAME OF CUSTOMER/PROJECT: IM3601AZ/IM3302AZ/IM3302BZ

BHARAT HEAVY ELECTRICALS LTD. BHOPAL

	NAME	SIGN.	DATE	NO. OF VAR.
DRN.	A.JHARIA	Sd/−	08.08.11	00
CKD.	D.K.	Sd/−	08.08.11	
APPD.	S.A.	Sd/−	08.08.11	

REV.	DATE	ALTERED / CHECKED / APPROVED	ZONE
02	02.01.24	ALTERED A.JHARIA; CHECKED A.JAIN; APPROVED A.JAIN	IN BOM MATL. SPEC. AA19332 WAS AA19333. CTQ ADDED. NOTES MODIFIED & ADDED.
01	03.07.12	ALTERED; CHECKED; APPROVED	DRG. REDRAWN IN AUTOCAD.

DEPT.	GRADE OF UN. TOL.	SCALE	WEIGHT (K.G.)	REF. TO ASSY.	ITEM NO.	NO. OF ITEM
TME	DIM. ∅/M/∡	NTS	4.1	24454303001	008	001
CODE. 405	AA0230208					

TITLE: OIL THROWER (INNER)

DRAWING NO. 24454303003 REV. 02

SHT NO. 01 No.OF SHT 01

THE INFORMATION ON THIS DOCUMENT IS THE PROPERTY OF BHARAT HEAVY ELECTRICALS LIMITED. IT MUST NOT BE USED DIRECTLY OR INDIRECTLY IN ANY WAY DETRIMENTAL TO THE INTEREST OF THE COMPANY.

REF. DRG. NO. | SIGN. & DATE | INVENTORY NO.

267714/2024/HEP-TXM20500

RAILWAY BOARD CONTRACT NO. 2010/ELECT.(DEV.)/181/8 DATED:23−11−2010

A2

FIRST ANGLE PROJECTION

(ALL DIMENSIONS ARE IN mm)

DRG. NO. 24454303004

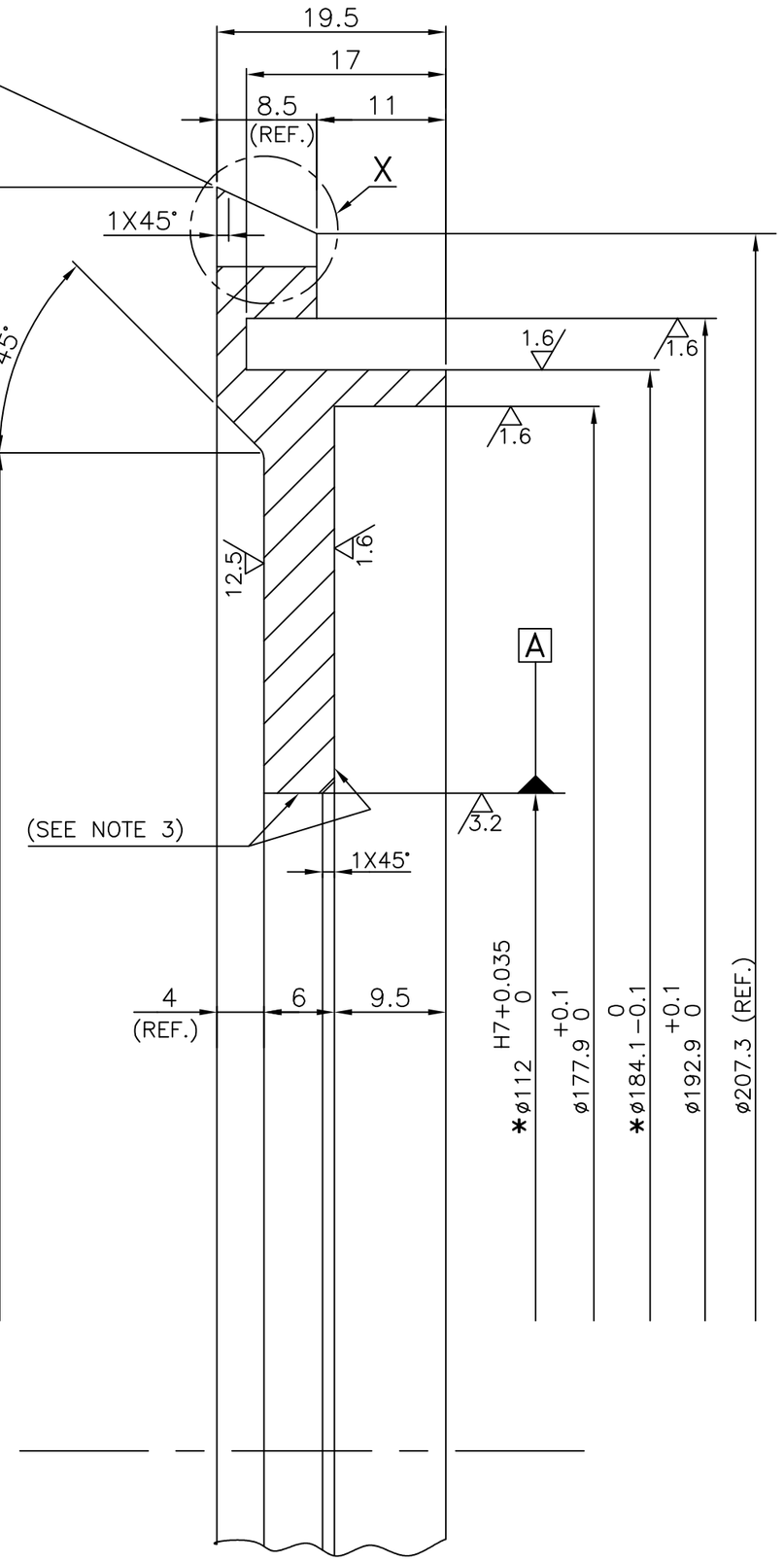

ENLARGED VIEW OF SECTION 'AA'

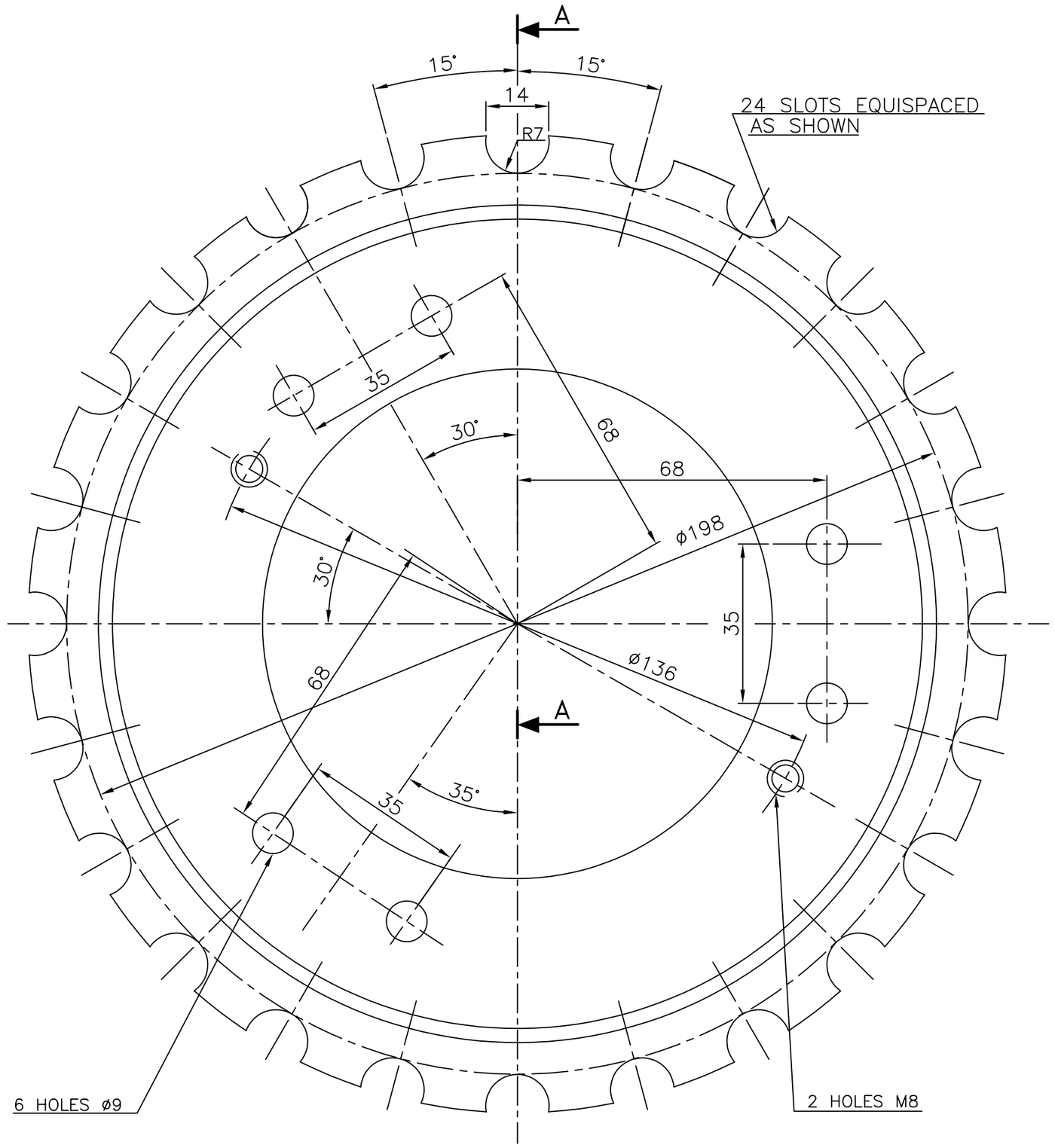

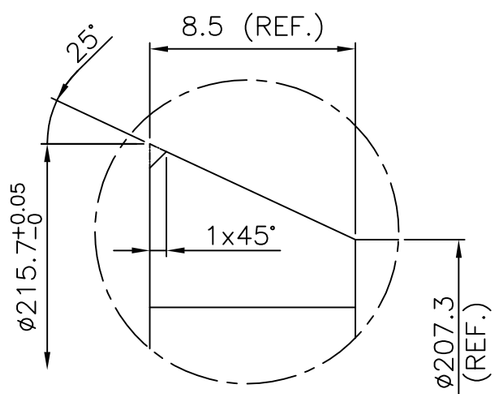

DETAIL–'X'

GAUGE LIST					
LIMIT	NOM SIZE	SYMBOL	TOOL NO.	ITEM	TYPE
ø215.7 +0.05 −0 ANGLE 25°	–	–	1411230	001	TAPER ANGLE GAUGE

TOOL LIST		
IT.NO.	TOOL NO.	DESCRIPTION
	1410644	GROOVE DEPTH GAUGE 4
	1410645	PIN GAUGE 111.635
	1410646	25° FORM TOOL
	1410647	D.J. FOR ALL HOLES
	1410648	ADAPTOR FOR DEVIDING HEAD
	1410649	PIN GAUGE 112+0.035
	1411031	SNAP GAUGE 184.1−0.1
	1411032	PIN GAUGE 177.9 +0.1 −0.0
	1605397	PROFILE CHECKING GAUGE AT ø215.7 FOR 25° IN SECTION 'AA'

NOTES:–

1. 3.2 ALL OVER EXCEPT OTHERWISE STATED. REMOVE SHARP CORNERS.
2. FINISH MACHINING OF DIAMETERS TO BE DONE TO MAINTAIN CONCENTRICITY WITHIN TIR 0.08 WITH REF. TO DIA.'A'.
3. THESE FACES TO BE PERPENDICULAR WITHIN 0.05 TIR.
4. DIAS. MARKED * TO BE CONCENTRIC WITHIN 0.05 MM.

VAR00	REMARKS	VAR. NO.	ITEM NO.	DESCRIPTION	STD	DRAWING NO.	IT.NO. / VAR.	MATL. CODE / MATL. SPCN.	A-C	UNIT	UNIT WT. / QTY.	GS	ZONE
001	RAW.WT–10.08 KG		001	OIL THROWER 25 THK. 226 SQ. BLK. ST. PLT.	1			AA1011808153 / AA10108		KG	1.32		

28 → CARD TYPE-3 28 → CARD TYPE-1 28 → CARD TYPE-2

ADDITIONAL INFORMATION

STATUS OF DRAWING

DISTRIBUTION OF PRINTS
TME–1
TXM–3
TNX–1

TYPE OF PRODUCT OR NAME OF CUSTOMER/PROJECT: IM3601AZ

BHARAT HEAVY ELECTRICALS LTD. BHOPAL

	NAME	SIGN.	DATE
DRN.	A.JHARIA		17.08.11
CKD.	D.K.		17.08.11
APPD.	S.A.		17.08.11

NO. OF VAR.

DEPT.	GRADE OF UN. TOL.	SCALE	WEIGHT (K.G.)	REF. TO ASSY.	ITEM NO.	NO. OF ITEM
TME	DIM. ∅/M/∡	N.T.S.	1.32	24454303001	013	001
CODE. 405	AA0230208					

TITLE: OIL THROWER (M/CD) (OUTER)

DRAWING NO. 24454303004 REV. 03

SHT NO. 01 No.OF SHT 01

REV.	DATE	ALTERED / CHECKED / APPROVED	ZONE	DESCRIPTION
03	31.08.20	ALTERED A.J. / CHECKED A.JAIN / APPROVED A.JAIN		DESCRIPTION OF 24 SLOTS ADDED. (REF. F/3,4)
02	13.02.19	ALTERED A.J. / CHECKED A.S. / APPROVED A.S.		TOOL NO. 1605397 ADDED. (TCM–353)
01	03.07.12	ALTERED / CHECKED / APPROVED		DRG. REDRAWN IN AUTOCAD.

THE INFORMATION ON THIS DOCUMENT IS THE PROPERTY OF BHARAT HEAVY ELECTRICALS LIMITED. IT MUST NOT BE USED DIRECTLY OR INDIRECTLY IN ANY WAY DETRIMENTAL TO THE INTEREST OF THE COMPANY.

INVENTORY NO. SIGN. & DATE REF. DRG. NO.

267714/2024/HEP-TXM20500

RAILWAY BOARD CONTRACT NO. 2010/ELECT.(DEV.)/181/8 DATED:23-11-2010

FIRST ANGLE PROJECTION

ALL DIMENSIONS ARE IN mm

DRG. NO. 2 445 44 09 002

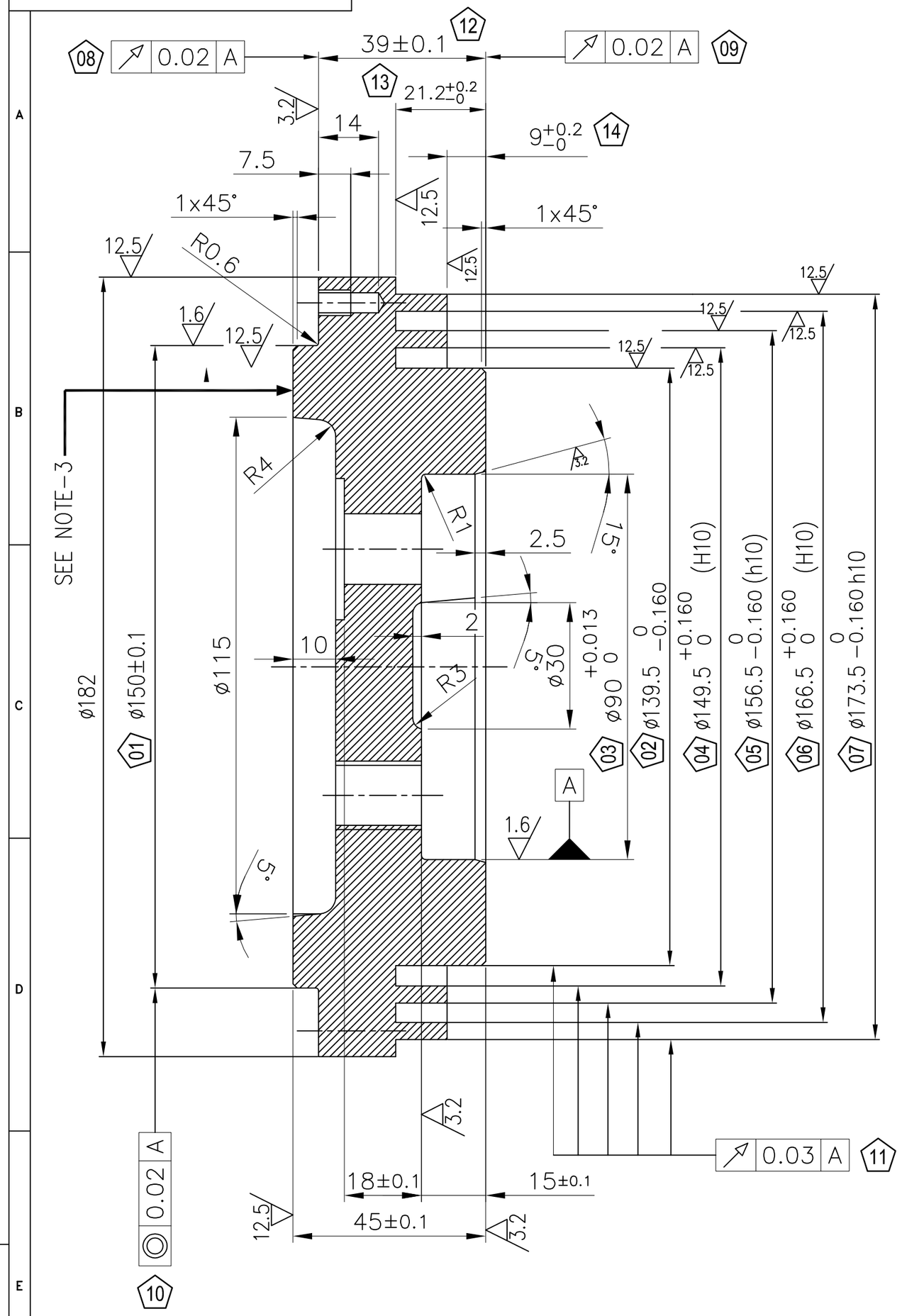

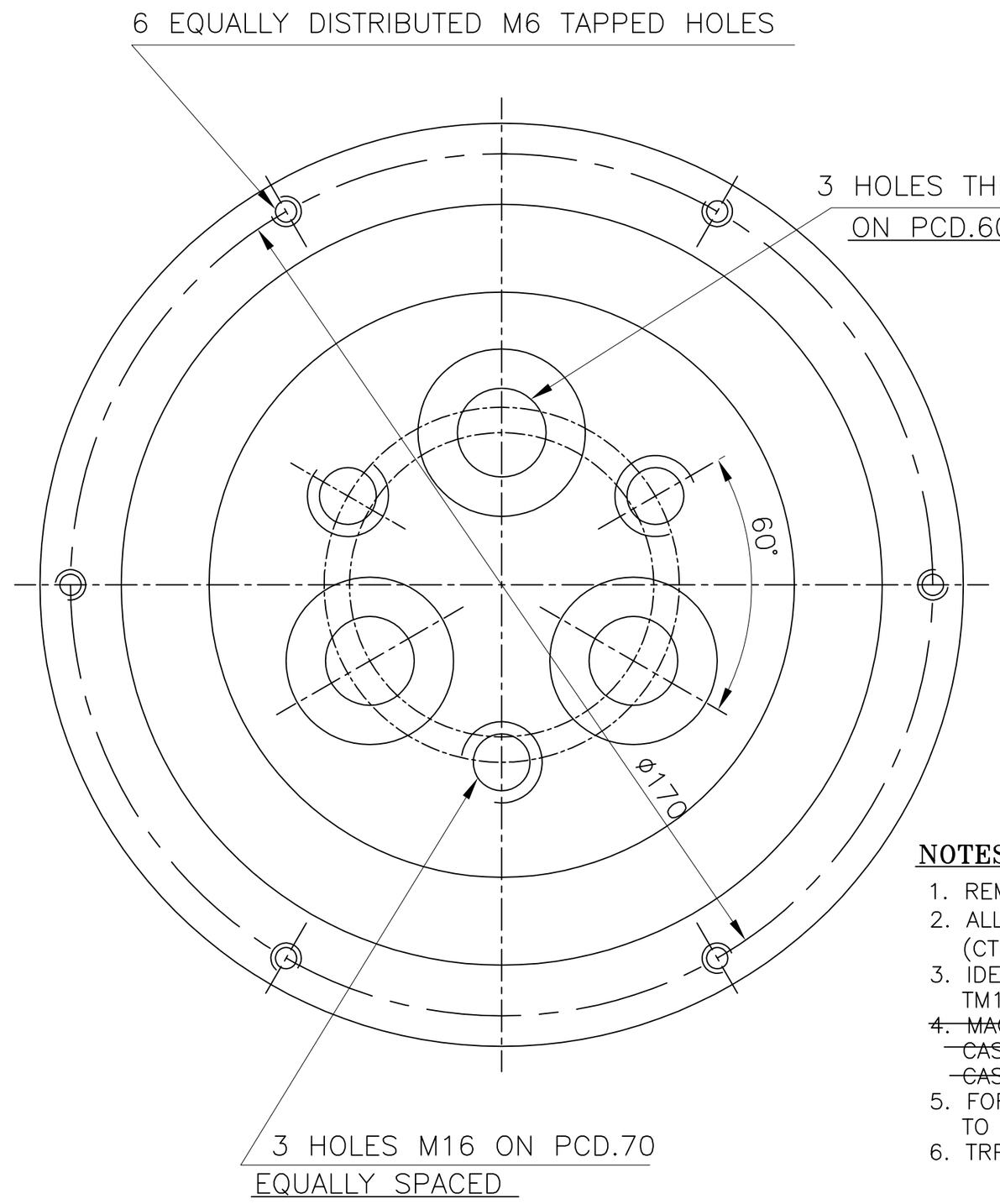

TOOL LIST		
IT.NO.	TOOL NO.	DESCRIPTION
	1605006	SNAP GAUGE ø173.5 $^{0}_{-0.160}$
	1605007	PIN GAUGE ø149.5 $^{0}_{+0.160}$ (H10)
	1605008	SNAP GAUGE ø156.5 $^{0}_{-0.160}$ (h10)
	1605009	PIN GAUGE ø166.5 $^{0}_{+0.160}$ (H10)
	1605003	SNAP GAUGE ø139.5 $^{0}_{-0.160}$ (H10)
	1605010	GROOVE GAUGE 5x12.2
	1606037	PIN GAUGE 90 +0.013/0
	1606038	SNAP GAUGE 150±0.1
	1606039	DRILL JIG FOR 6XM6,3XM16 & 3X16.5

NOTES :-

1. REMOVE ALL SHARP EDGES.
2. ALL 14 NOS. "⬠" MARKED DIMENSION ARE CRITICAL TO QUALITY (CTQ) & SL. NO. OF CTQ DIMENSION ARE INSCRIBED IN ⬠ e.g. (14).
3. IDENTIFICATION MARKING TO BE DONE AT THIS LOCATION AS PER TM12548.
4. ~~MACHINING ALLOWANCE ON EACH TOOL POINT TO BE 5-7 MM IN CASE CASTING IS SUPPLIED OR 3-5 MM IN CASE ROUGH MACHINED CASTING IS SUPPLIED.~~
5. FOR QUALITY REQUIREMENT OF COMPONENT SPECIFICATION TM12545 TO BE REFERRED.
6. TRP TO BE APPLIED ON ALL MACHINED SURFACES.

QTY VAR 00	REMARKS	VAR. NO.	ITEM NO.	DESCRIPTION	STD	DRAWING NO.	IT.NO. / VAR.	MATL. CODE / MATL. SPCN.	AIC	UNIT	UNIT WT. / QTY.	GS	ZONE
	RAW WEIGHT 14.16 KG.		001	CLAMP PLATE (NDE) 50TK.x190x190				AA10119		KG	4.5		

ADDITIONAL INFORMATION

STATUS OF DRAWING

DISTRIBUTION OF PRINTS

TME-1, TXM-3, TNX-1

TYPE OF PRODUCT OR NAME OF CUSTOMER/PROJECT: IM3301AZ/BZ/IM3302AZ

BHARAT HEAVY ELECTRICALS LTD. BHOPAL

	NAME	SIGN	DATE	NO. OF VAR.
DRN.	ASWINI		01.08.17	
CHD.	A.JAIN		01.08.17	
APPD.	A.S.		01.08.17	

DEPT.	UNTOL. DIMS. GR.		SCALE	WEIGHT (K.G.)	REF. TO ASSY. DRG.	ITEM NO.	NO. OF ITEM
TME	AA0230208		N.T.S.	4.5	2 445 44 09 001	006	001

CODE 405

TITLE: CLAMP PLATE (NDE) (CNC MACHINED)

DRAWING NO. 2 445 44 09 002 — REV. 02

SHT. NO. 01 — NO. OF SHT. 01

REV.	DATE	ALTERED / CHECKED / APPROVED	ZONE
02	19.03.19	ALTERED A.JHARIA; CHECKED A.J.; APPROVED A.J. — 3 HOLES M16 & ø16.5 DESCRIPTION CHANGED. NOTES-2 & 3 MODIFIED AND NOTE-6 ADDED. CTQ 12,13 &14 ADDED.	
01	22.09.17	ALTERED A.JHARIA; CHECKED A.SHARMA; APPROVED A.SHARMA — TOOL LIST ADDED. (TCM350)	

THE INFORMATION ON THIS DOCUMENT IS THE PROPERTY OF BHARAT HEAVY ELECTRICALS LIMITED.
IT MUST NOT BE USED DIRECTLY OR INDIRECTLY IN ANY WAY DETRIMENTAL TO THE INTEREST OF THE COMPANY.

REF. DRG. NO.

SIGN. & DATE

267714/2024/HEP-TXM20500
INVENTORY NO.

SIZE A2

FIRST ANGLE PROJECTION

(ALL DIMENSIONS ARE IN mm)

DRG. NO. 34454303001

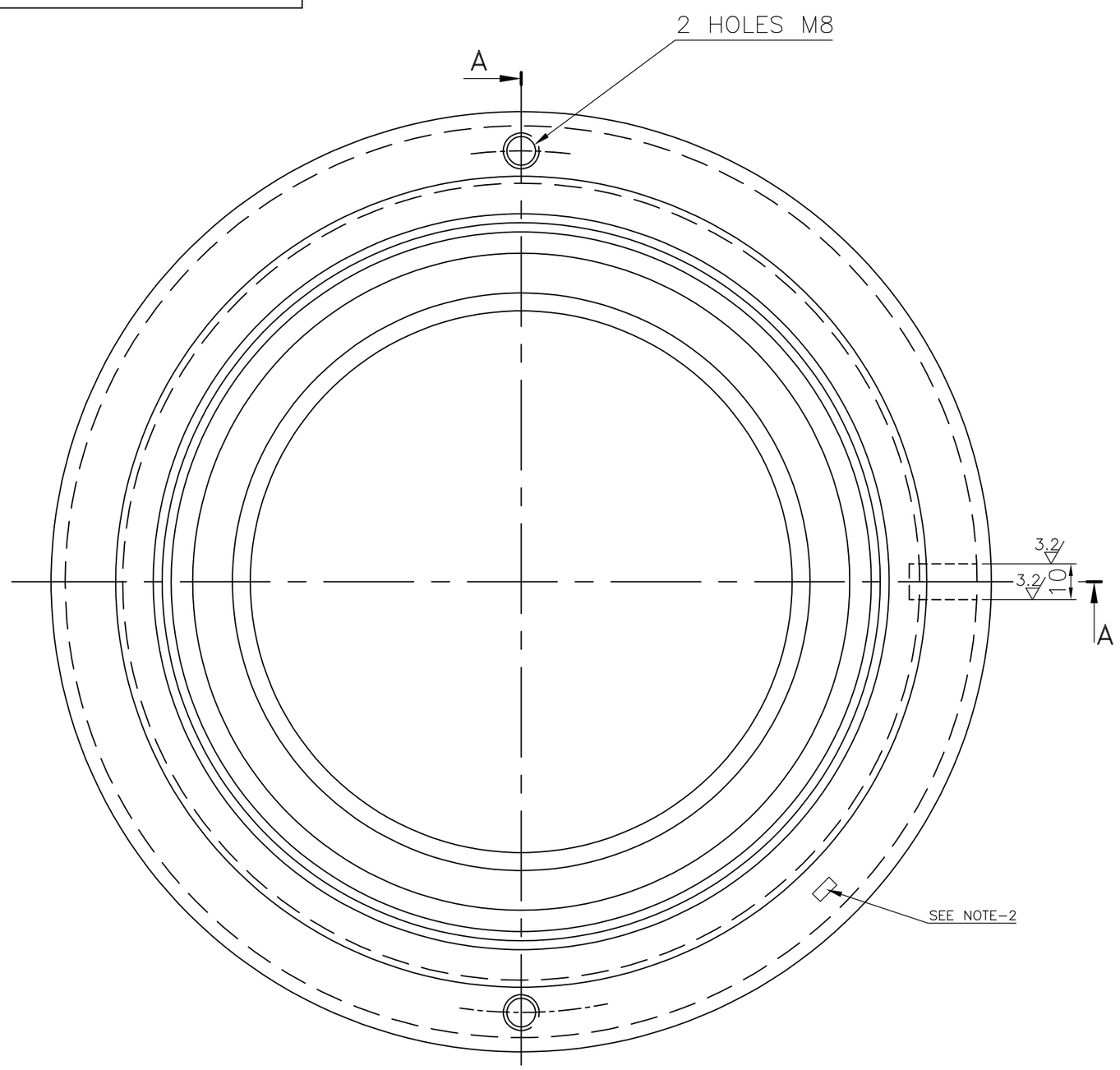

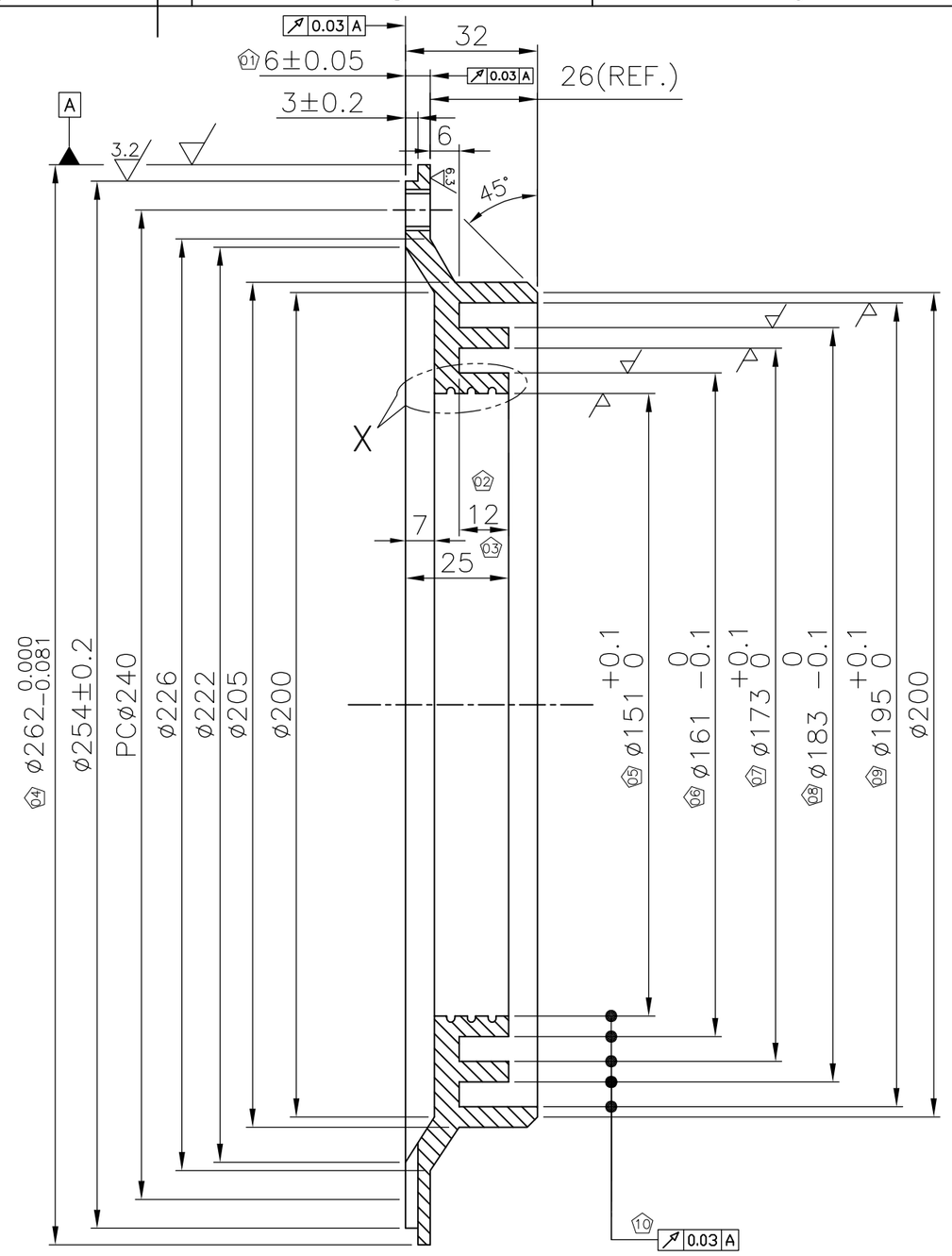

SECTION-AA

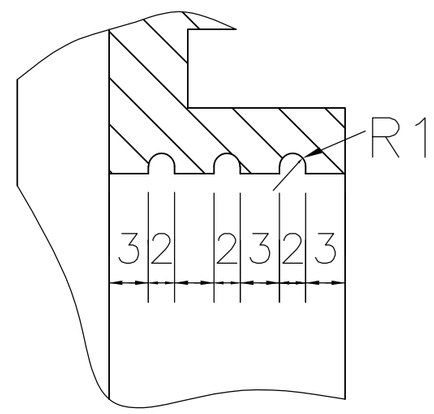

VIEW-X

TOOL LIST

IT.NO.	TOOL NO.	DESCRIPTION
001	1579037	CALLIPER GAUGE 262 0/-0.08
001	1579038	CALLIPER GAUGE 183 0/-0.1
001	1579039	CALLIPER GAUGE 161 0/-0.1
001	1578879	GROOVE CHECKING GAUGE 6X12 DEEP
001	1579041	PIN GAUGE 151 +0.1/0
001	1579042	TOOL SETTING BAR GAUGE 26MM.
001	1579043	PROFILE GAUGE
001	1579044	SNAP GAUGE 25 MM.
001	1579045	DRILL JIG FOR 2 HOLES

NOTES:-

1. REMOVE ALL SHARP CORNERS & BURRS
2. IDENTIFICATION MARKING TO BE DONE AS PER TM12548 AT THE LOCATION SHOWN.
3. QUALITY CHECKING OF OUTER LABYRINTH RING DE TO BE DONE AS PER TM12545.
4. TEMPORARY RUST PREVENTIVE (TRP) TO BE APPLIED ON MACHINED SURFACES AS PER AA55152.
5. 100% QUANITY TO BE MPI TESTED TO SPEC. AA0850133 WITH ACCEPTANCE CRITERIA AS PER LEVEL II OF SPEC. AA0850134.
6. ALL 15 NOS."⬠" MARKED DIMENSIONS ARE CRITICAL TO QUALITY (CTQ) & SL. NO. OF CTQ DIMENSIONS ARE INSCRIBED IN ⬠ e.g. ⑮.
7. MACHINE ALL OVER 2.0/▽.

VAR.OO	REMARKS	VAR NO.	ITEM NO.	DESCRIPTION	STD.	DRAWING NO.	IT.NO.	MATL. CODE	A C	UNIT	UNIT WT.	GS	ZONE
	R/WT-23kg		001	BEARING COLLAR 40TK.X SQ.270				AA1011808196 AA10108		KG	2.61		

28 → CARD TYPE-3 | 28 → CARD TYPE-1 | 28 → CARD TYPE-2

ADDITIONAL INFORMATION

STATUS OF DRAWING

DISTRIBUTION OF PRINTS TME-1 TXM-4 TNX-1

TYPE OF PRODUCT OR NAME OF CUSTOMER/PROJECT IM3601AZ/IM3302AZ/IM3302BZ

BHARAT HEAVY ELECTRICALS LTD. BHOPAL

	NAME	SIGN	DATE
DRN	A.JHARIA		05.08.99
CKD	D.K.		06.08.11
APPD	S.A.		06.08.11

NO. OF VAR.

REV.	DATE	ALTERED / CHECKED / APPD.	REV.	DATE	ALTERED / CHECKED / APPD.	REV.	DATE	ALTERED / CHECKED / APPD.	ZONE
01	03.04.24	ALTERED A.J. / CHECKED A.JAIN / APPD. A.JAIN				01	03.04.24	NOTE MODIFIED. CTQ ADDED. DIMN. 6(±0.05) WAS 6(±0.1).	

DEPT.	UNTOL. DIMS. GR.	SCALE	WEIGHT(K.G.)	REF.TO ASSY.DRG.	ITEM NO.	NO.OF ITEM
TME	M	NTS	2.61	24454303001	007	001
CODE 405	AA0230208					

TITLE BEARING COLLAR

DRAWING NO. 34454303001 REV. 01

SHT. NO. 01 NO. OF SHT. 01

THE INFORMATION ON THIS DOCUMENT IS THE PROPERTY OF BHARAT HEAVY ELECTRICALS LIMITED. IT MUST NOT BE USED DIRECTLY OR INDIRECTLY IN ANY WAY DETRIMENTAL TO THE INTEREST OF THE COMPANY.

REF. DRG. NO. | SIGN. & DATE | INVENTORY NO.

267714/2024/HEP-TXM20500

RAILWAY BOARD CONTRACT NO. 2010/ELECT.(DEV.)/181/8 DATED:23-11-2010

FIRST ANGLE PROJECTION

(ALL DIMENSIONS ARE IN mm)

DRG. NO. 34454303002

TOOL LIST		
IT.NO.	TOOL NO.	DESCRIPTION
001	1578864	CALIPER GAUGE 189 0/−0.2
001	1578865	PIN GAUGE 134 +0.025/0

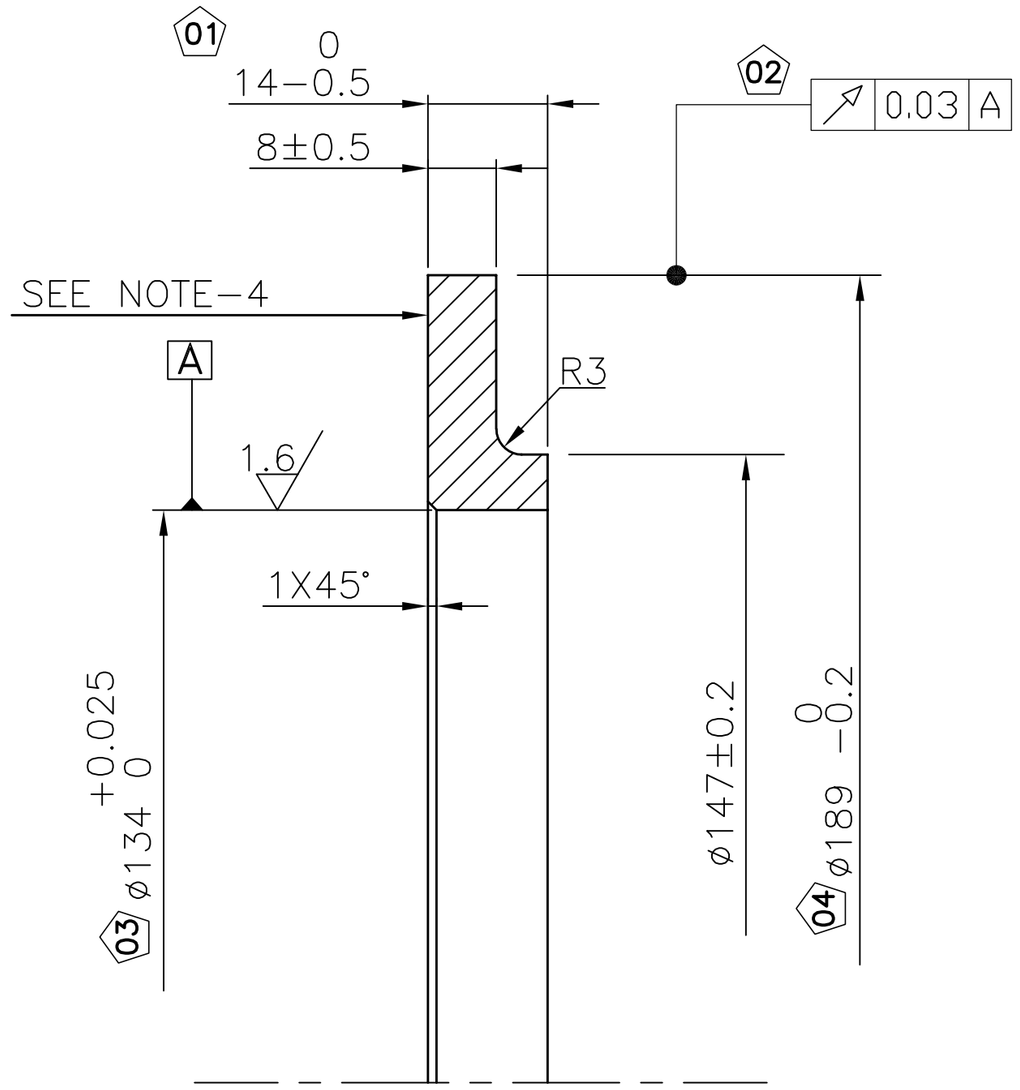

NOTES:−

1. 12.5 ALL OVER EXCEPT OTHERWISE STATED, REMOVE SHARP CORNERS.
2. ALL SHARP EDGES TO BE CHAMFERED TO 0.2−0.3x45°.
3. ALL 04 NOS."⬠" MARKED DIMENSIONS ARE CRITICAL TO QUALITY(CTQ) & SL.NO. OF CTQ DIMENSIONS ARE INSCRIBED IN ⬠ e.g. 04.
4. IDENTIFICATION MARKING TO BE DONE AS PER TM12548 AT THE LOCATION SHOWN.
5. QUALITY CHECKING TO BE DONE AS PER TM12545.
6. TEMPORARY RUST PREVENTIVE (TRP) TO BE APPLIED ON MACHINED SURFACES AS PER AA55152.

VAR.00 (59–64)	REMARKS (65–75)	VAR NO. (78 79)	ITEM NO. (25 27)	DESCRIPTION (29–58)	STD. (59)	DRAWING NO. (60–77)	IT.NO. (29 31)	MATL. CODE (34–45)	A/C (55)	UNIT (56–57)	UNIT WT. (58–65)	GS (72)
	R/WT.−5.50		001	GREASE SEAL				AA19332		KG	1.0	

VAR. (32 33)	MATL. SPCN. (46–54)	QTY. (68–71)

28 → CARD TYPE−3 | 28 → CARD TYPE−1 | 28 → CARD TYPE−2

ADDITIONAL INFORMATION

STATUS OF DRAWING

DISTRIBUTION OF PRINTS

TME−1 TNX−1 TXM−4

TYPE OF PRODUCT OR NAME OF CUSTOMER/PROJECT: IM3601AZ/IM3302AZ/IM3302BZ

BHARAT HEAVY ELECTRICALS LTD. BHOPAL

	NAME	SIGN	DATE	NO. OF VAR.
DRN	A.JHARIA		02.08.11	
CKD	D.K.		02.08.11	
APPD	S.A.		02.08.11	

REV.	DATE	ALTERED	REV.	DATE	ALTERED	REV.	DATE	ALTERED	
		CHECKED			CHECKED	01	02.01.24	CHECKED	A.JAIN
		APPD.			APPD.			APPD.	A.JAIN

IN BOM MATL. SPEC. AA19332 WAS AA10208. CTQ ADDED. NOTES MODIFIED & ADDED.

DEPT. T.M.E.	UNTOL. DIMS. GR.	SCALE	WEIGHT(K.G.)	REF.TO ASSY.DRG.	ITEM NO.	NO.OF ITEM
CODE 405	M AA0230208	NTS	1.0	24454303001	003	001

TITLE: GREASE SEAL D.E. (SHAFT)

DRAWING NO. 34454303002 REV. 01

SHT. NO. 01 NO. OF SHT. 01

RAILWAY BOARD CONTRACT NO. 2010/ELECT.(DEV.)/181/8 DATED:23−11−2010

THE INFORMATION ON THIS DOCUMENT IS THE PROPERTY OF BHARAT HEAVY ELECTRICALS LIMITED. IT MUST NOT BE USED DIRECTLY OR INDIRECTLY IN ANY WAY DETRIMENTAL TO THE INTEREST OF THE COMPANY.

REF. DRG. NO. | SIGN. & DATE | INVENTORY NO.

FIRST ANGLE PROJECTION

(ALL DIMENSIONS ARE IN mm)

DRG. NO. 34454303003

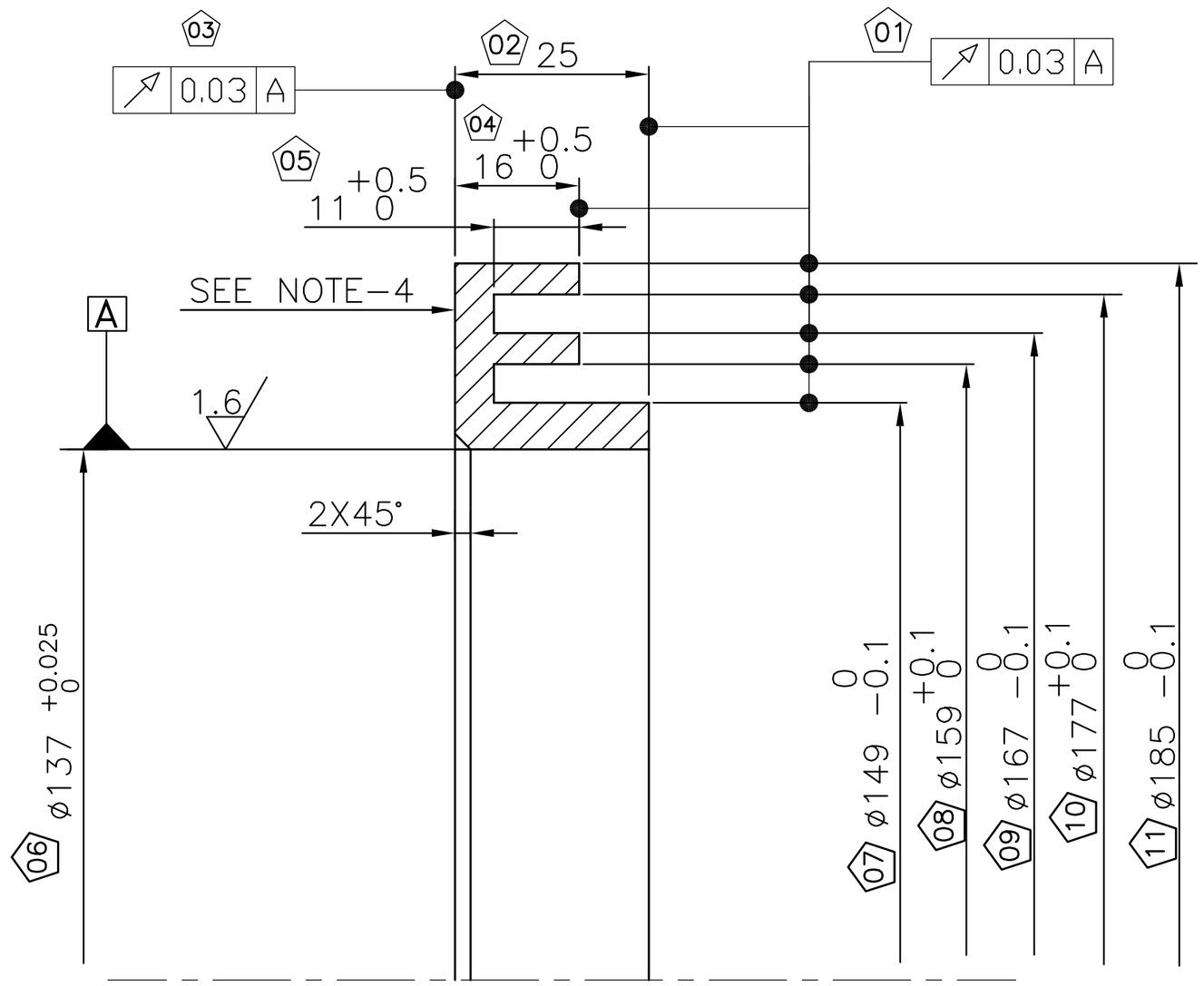

TOOL LIST		
IT.NO.	TOOL NO.	DESCRIPTION
001	1578883	CALIPER GAUGE 185 0/−0.1
001	1578884	CALIPER GAUGE 149 0/−0.1
001	1578885	CALIPER GAUGE 167 0/−0.1
001	1578886	GROOVE CHECKING GAUGE 5X11 DEEP
001	1578887	PIN GAUGE 137 +0.025/0

NOTES:−

1. 12.5 ALL OVER EXCEPT OTHERWISE STATED, REMOVE SHARP CORNERS.
2. ALL SHARP EDGES TO BE CHAMFERED TO 0.2−0.3x45°.
3. ALL 11 NOS."⬠" MARKED DIMENSIONS ARE CRITICAL TO QUALITY(CTQ) & SL.NO. OF CTQ DIMENSIONS ARE INSCRIBED IN ⬠ e.g.(11).
4. IDENTIFICATION MARKING TO BE DONE AS PER TM12548 AT THE LOCATION SHOWN.
5. QUALITY CHECKING TO BE DONE AS PER TM12545.
6. TEMPORARY RUST PREVENTIVE (TRP) TO BE APPLIED ON MACHINED SURFACES AS PER AA55152.

VAR.00 (59–64)	REMARKS (65–75)	VAR NO. (78 79)	ITEM NO. (25 27)	DESCRIPTION (29–58)	STD. (59)	DRAWING NO. (60–77)	IT.NO. (29 31)	MATL. CODE (34–45)	A C (55)	UNIT (56–57)	UNIT WT. (58–65)	GS (72)
	R/WT−4.5kg		001	INNER LABYRINTH RING				AA19332			1.25	
							VAR. (32 33)	MATL. SPCN. (46–54)			QTY. (68–71)	

28 → CARD TYPE−3 | 28 → CARD TYPE−1 | 28 → CARD TYPE−2

ADDITIONAL INFORMATION

STATUS OF DRAWING

DISTRIBUTION OF PRINTS

TME−1 TNX−1 TXM−4

TYPE OF PRODUCT OR NAME OF CUSTOMER/PROJECT: IM3601AZ/IM3302AZ/IM3302BZ

BHARAT HEAVY ELECTRICALS LTD. BHOPAL

	NAME	SIGN	DATE
DRN	A.JHARIA		08.08.11
CKD	D.K.		08.08.11
APPD	S.A.		08.08.11

NO. OF VAR.

DEPT.	UNTOL. DIMS. GR.	SCALE	WEIGHT(K.G.)	REF.TO ASSY.DRG.	ITEM NO.	NO.OF ITEM
T.M.E.	M	NTS	1.25	24454303001	001	001
CODE 405	AA0230208					

TITLE: INNER LABYRINTH RING D.E.

DRAWING NO. 34454303003 REV. 02

SHT. NO. 01 NO. OF SHT. 01

REV.	DATE	ALTERED	REV.	DATE	ALTERED A.JHARIA	REV.	DATE	ALTERED
		CHECKED	02	02.01.24	CHECKED A.JAIN	01	16.02.18	CHECKED
		APPD.			APPD. A.JAIN			APPD.
				IN BOM MATL. SPEC. AA19332 WAS AA19721. CTQ ADDED. NOTES MODIFIED & ADDED.			IN NOTE−3 SPEC. TM94217 CL V WAS BP0674184 CL V.	

RAILWAY BOARD CONTRACT NO. 2010/ELECT.(DEV.)/181/8 DATED:23−11−2010

THE INFORMATION ON THIS DOCUMENT IS THE PROPERTY OF BHARAT HEAVY ELECTRICALS LIMITED. IT MUST NOT BE USED DIRECTLY OR INDIRECTLY IN ANY WAY DETRIMENTAL TO THE INTEREST OF THE COMPANY.

REF. DRG. NO. M10.011.653

SIGN. & DATE

INVENTORY NO.

714/2024/HEP-TXM20500

FIRST ANGLE PROJECTION

(ALL DIMENSIONS ARE IN mm.)

DRAWING NO. 3 445 44 03 002

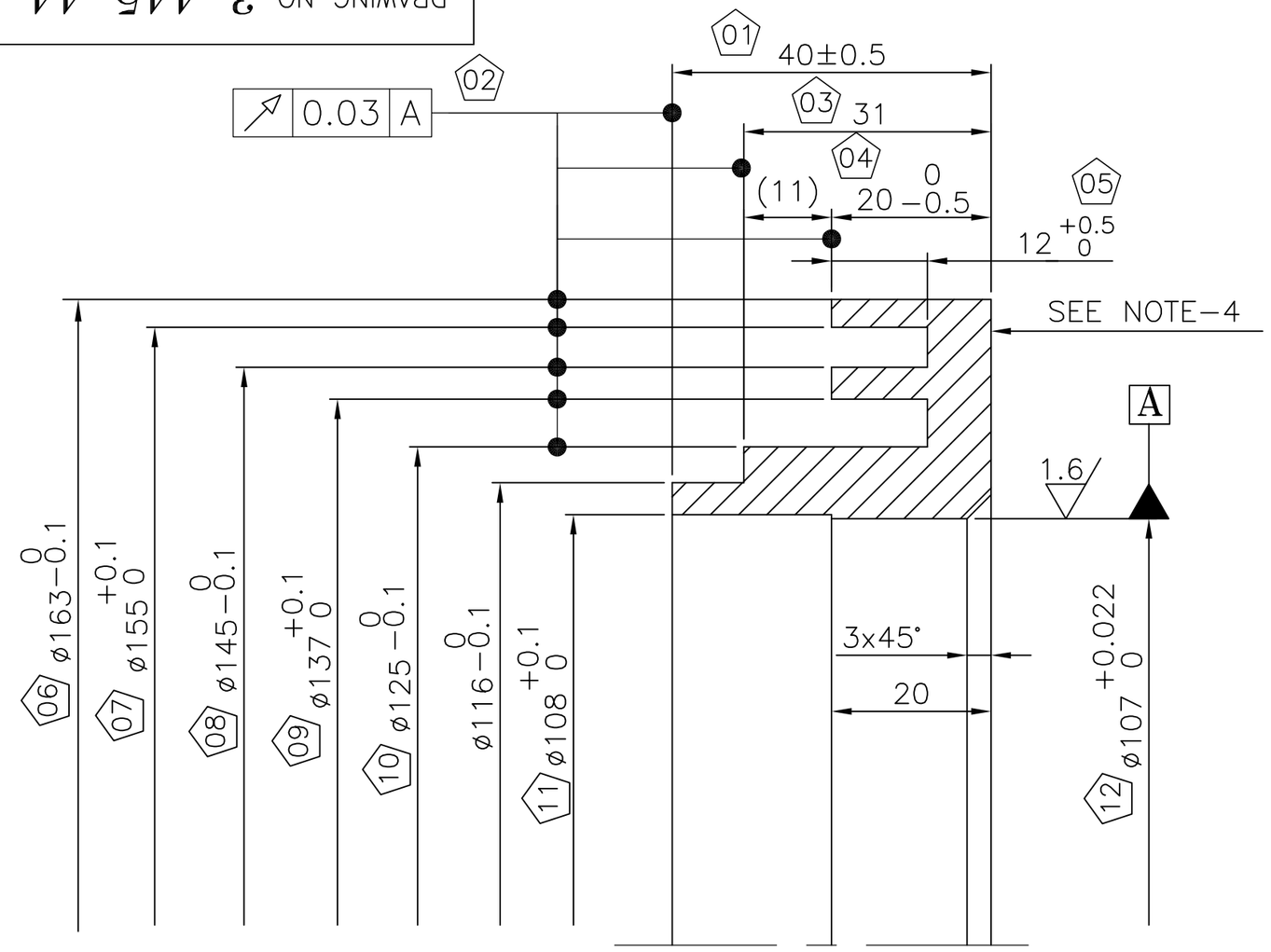

TOOL LIST		
IT.NO.	TOOL NO.	DESCRIPTION
001	1578875	CALIPER GAUGE $163^{0}_{-0.1}$
001	1578896	CALIPER GAUGE $116^{0}_{-0.1}$
001	1578877	CALIPER GAUGE $125^{0}_{-0.1}$
001	1578878	CALIPER GAUGE $145^{0}_{-0.1}$
001	1578879	GROOVE GAUGE 6X12
001	1578880	GROOVE GAUGE 5X12
001	1578881	PIN GAUGE $107^{+0.022}_{0}$
001	1578882	SNAP GAUGE $40^{+0}_{-0.5}$

NOTES:−

1. 12.5 ALL OVER EXCEPT OTHERWISE STATED, REMOVE SHARP CORNERS.
2. ALL SHARP EDGES TO BE CHAMFERED TO 0.2−0.3x45°.
3. ALL 12 NOS."⬠" MARKED DIMENSIONS ARE CRITICAL TO QUALITY(CTQ) & SL.NO. OF CTQ DIMENSIONS ARE INSCRIBED IN ⬠ e.g. 12.
4. IDENTIFICATION MARKING TO BE DONE AS PER TM12548 AT THE LOCATION SHOWN.
5. QUALITY CHECKING TO BE DONE AS PER TM12545.
6. TEMPORARY RUST PREVENTIVE (TRP) TO BE APPLIED ON MACHINED SURFACES AS PER AA55152.

VAR OO	REMARKS	VAR NO.	ITEM NO.	DESCRIPTION	STD.	DRAWING NO.	IT. NO. / VAR	MATL. CODE. / MATL. SPCN.	A/C	UNIT	UNIT WT. / QTY.	GS.
	R.WT.−10.76		001	LABYRINTH RING				AA19332		KG	1.75	

R / /

ADDITIONAL INFORMATION

STATUS OF DRAWING

DISTRIBUTION OF PRINTS
TME − 1
TNX − 1
TXM−4

TYPE OF PRODUCT OR NAME OF CUSTOMER/PROJECT: IM3601AZ/IM3302AZ/IM3302BZ

BHARAT HEAVY ELECTRICALS LTD. BHOPAL

	NAME	SIGN.	DATE	NO. OF VAR.
DRN.	A.JHARIA		05.08.11	
CKD.	D.K.		05.08.11	
APPD.	S.A.		05.08.11	

REV	DATE	ALTERED / CHECKED / APPROVED	REV	DATE	ALTERED / CHECKED / APPROVED	REV	DATE	ALTERED / CHECKED / APPROVED
						01	02.01.24	ALTERED A.JHARIA; CHECKED A.JAIN; APPROVED A.JAIN

IN BOM MATL. SPEC. AA19332 WAS AA10108. CTQ ADDED. NOTES MODIFIED & ADDED.

DEPT.	GRADE OF UNTOL. DIMS. GR.	SCALE	WEIGHT (K.G.)	REF. TO ASSY.	ITEM NO.	NO. OF ITEM
TME	M	NTS	1.75	2 445 44 03 001	001	001
CODE. 405	AA0230208					

TITLE: INNER LABYRINTH RING NDE

DRAWING NO. 3 445 44 03 002 REV. 01

SHT.NO 01 NO.OF.SHT. 01

RAILWAY BOARD CONTRACT NO. 2010/ELECT.(DEV.)/181/8 DATED:23−11−2010

BHARAT HEAVY ELECTRICALS LIMITED. IT MUST NOT BE USED DIRECTLY OR INDIRECTLY IN ANY WAY DETRIMENTAL TO THE INTEREST OF THE COMPANY.

SIGN. & DATE

INVENTORY No.

267714/2024/HEP-TXM20500

FIRST ANGLE PROJECTION

(ALL DIMENSIONS ARE IN mm)

DRG. NO. 3 445 44 09 001

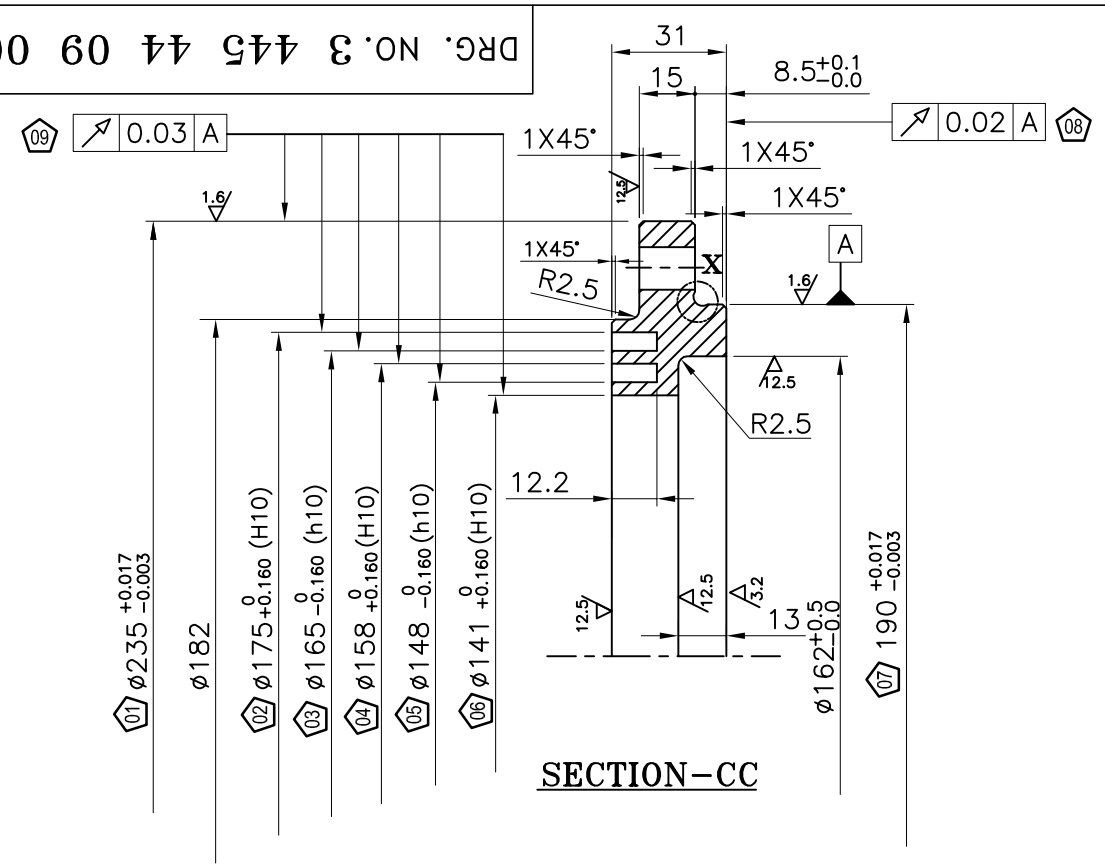

SECTION–CC

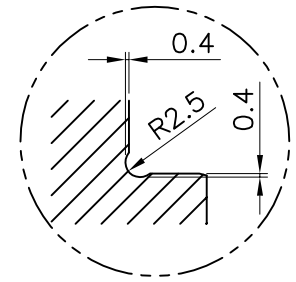

DETAIL–X

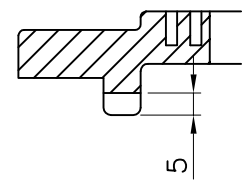

SECTION B–B

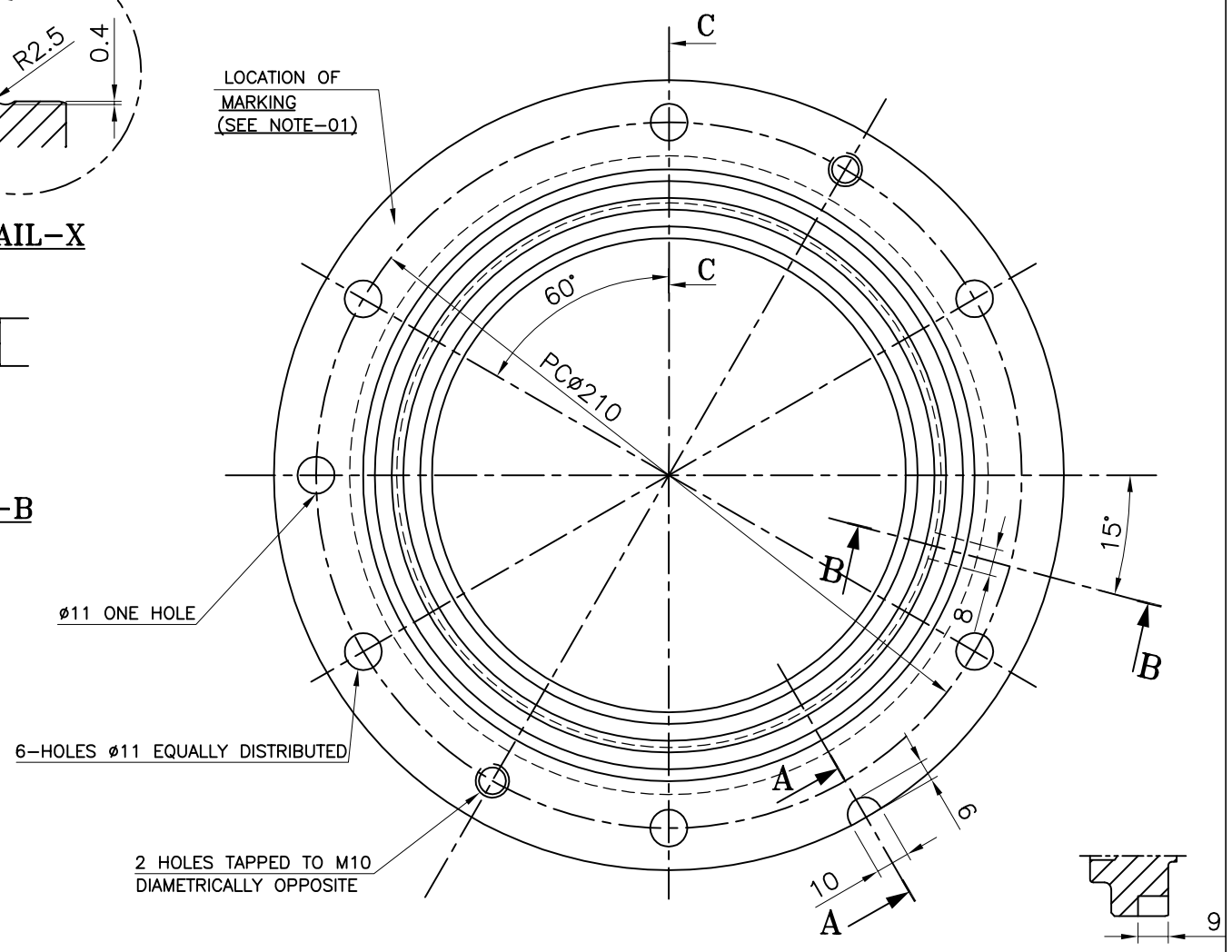

SECTION 'AA'

NOTES:–

1. MARKING TO BE DONE AT THIS LOCATION AS PER SPECIFICATION TM12548.
2. ALL SHARP EDGES TO BE CHAMFERED TO 0.2–0.3x45°.
3. ALL 08 NOS."⬠" MARKED DIMENSIONS ARE CRITICAL TO QUALITY(CTQ) & SL.NO. OF CTQ DIMENSIONS ARE INSCRIBED IN ⬠ e.g. 08.
4. ALL MACHINED/ R.MACHINED SURFACES TO BE PROTECTED WITH TRP.
5. FOR OTHER QUALITY REQUIREMENT WHICH ARE NOT CALLED IN DRAWING SPECIFICATION TM12545 TO BE REFERRED.

TOOL LIST

TOOL NO.	DESCRIPTION
1605049	CALIPER GAUGE ø148 0 −0.16
1605050	CALIPER GAUGE ø165 0 −0.16
1605051	CALIPER GAUGE ø235 +0.03 0
1605052	PIN GAUGE ø158 +0.16 0
1605053	PIN GAUGE ø175 +0.16 0
1606040	PIN GAUGE ø141 +0.16 0
1606041	PIN GAUGE 190 +0.017 −0.003
1606042	GROOVE GAUGE 12.2X5 +0.16 0
1606043	DRILL JIG FOR 2xM10, 7xø11

QTY VAR 00 (59–64)	REMARKS (65–75)	VAR. NO. (78 79)	ITEM NO. (25–27)	DESCRIPTION (29–58)	STD (59)	DRAWING NO. (60–77)	IT.NO. (29–31) / VAR. (32 33)	MATL. CODE (34–45) / MATL. SPCN. (46–54)	CAT (55)	UNIT (56 57)	UNIT WT. (58–65) / QTY. (68–71)	GS (72)	ZONE
	RAW WEIGHT 16.96 KG.		001	BEARING CAP NDE 36Tk.x245x245				AA10119		KG	4.02		

ADDITIONAL INFORMATION
34454464051

STATUS OF DRAWING

DISTRIBUTION OF PRINTS
TME–1, TXM–3, TNX–1

TYPE OF PRODUCT OR NAME OF CUSTOMER/PROJECT: IM3301AZ/BZ

BHARAT HEAVY ELECTRICALS LTD. BHOPAL

	NAME	SIGN	DATE
DRN.	ASWINI		02.08.17
CHD.	A.JAIN		02.08.17
APPD.	A.S.		02.08.17

NO. OF VAR.

DEPT.	UNTOL. DIMS. GR.		SCALE	WEIGHT (K.G.)	REF. TO ASSY. DRG.	ITEM NO.	NO. OF ITEM
TME CODE 405	'M' AA0230208		N.T.S.	4.02	2 445 44 09 001	004	001

TITLE: BEARING CAP NDE (CNC MACHINED)

DRAWING NO. 3 445 44 09 001 REV. 07

SHT. NO. 01 NO. OF SHT. 01

SIZE A3

SIGN. & DATE — REF. DRG. NO.

REV.	DATE	ALTERED	CHECKED	APPROVED	ZONE	
07	27.05.19	A.JHARIA	A.SHARMA	A.SHARMA	ZONE	IN TOOL LIST, DESCRIPTION OF TOOL NO. 1606043 MODIFIED. (TCM–354)
06	16.05.19	A.JHARIA	A.JAIN	A.JAIN	ZONE	DIMS. ø290 & 11 DELETED. DIM. 15 ADDED. HOLES PCD 210 WAS 265. IN SEC.AA DIMS. 6 & 9 WERE 33.5 & 3. NOTES MODIFIED.
05	11.05.19	A.JHARIA	A.SHARMA	A.SHARMA	ZONE	IN TOOL LIST, DESCRIPTION OF TOOL NO. 1606041 MODIFIED. (TCM–354)

INVENTORY NO.

REV.	DATE	ALTERED	CHECKED	APPROVED	ZONE	
04	02.05.19	A.JHARIA	A.SHARMA	A.SHARMA	ZONE	IN SECTION–CC, DIM. 190 +0.017 −0.003 WAS 190 +0.017 +0.037 . NOTES– 3 & 5 MODIFED AND NOTE–6 ADDED.
03	21.12.18	A.JHARIA	A.SHARMA	A.SHARMA	ZONE	SECTION–BB LOCATION CORRECTED. CORRECTED.
02	01.06.18	VIJAY	A.SHARMA	A.SHARMA	ZONE	VIEW UPDATED.
01	22.09.17	A.JHARIA	A.SHARMA	A.SHARMA	ZONE	TOOL LIST ADDED. (TCM350)

THE INFORMATION ON THIS DOCUMENT IS THE PROPERTY OF BHARAT HEAVY ELECTRICALS LIMITED. IT MUST NOT BE USED DIRECTLY OR INDIRECTLY IN ANY WAY DETRIMENTAL TO THE INTEREST OF THE COMPANY.

267714/2024/HEP-TXM20500