THE INFORMATION ON THIS DOCUMENT IS THE PROPERTY OF BHARAT HEAVY ELECTRICALS LIMITED.
IT MUST NOT BE USED DIRECTLY OR INDIRECTLY IN ANY WAY DETRIMENTAL TO THE INTEREST OF THE COMPANY.

112791/2024/HEP-TAM21300

INVENTORY NO.	SIGN AND DATE	REF. DRG. NO.

FIRST ANGLE PROJECTION

ALL DIMENSIONS ARE IN mm

DRG. NO. 2 430 20 76 201

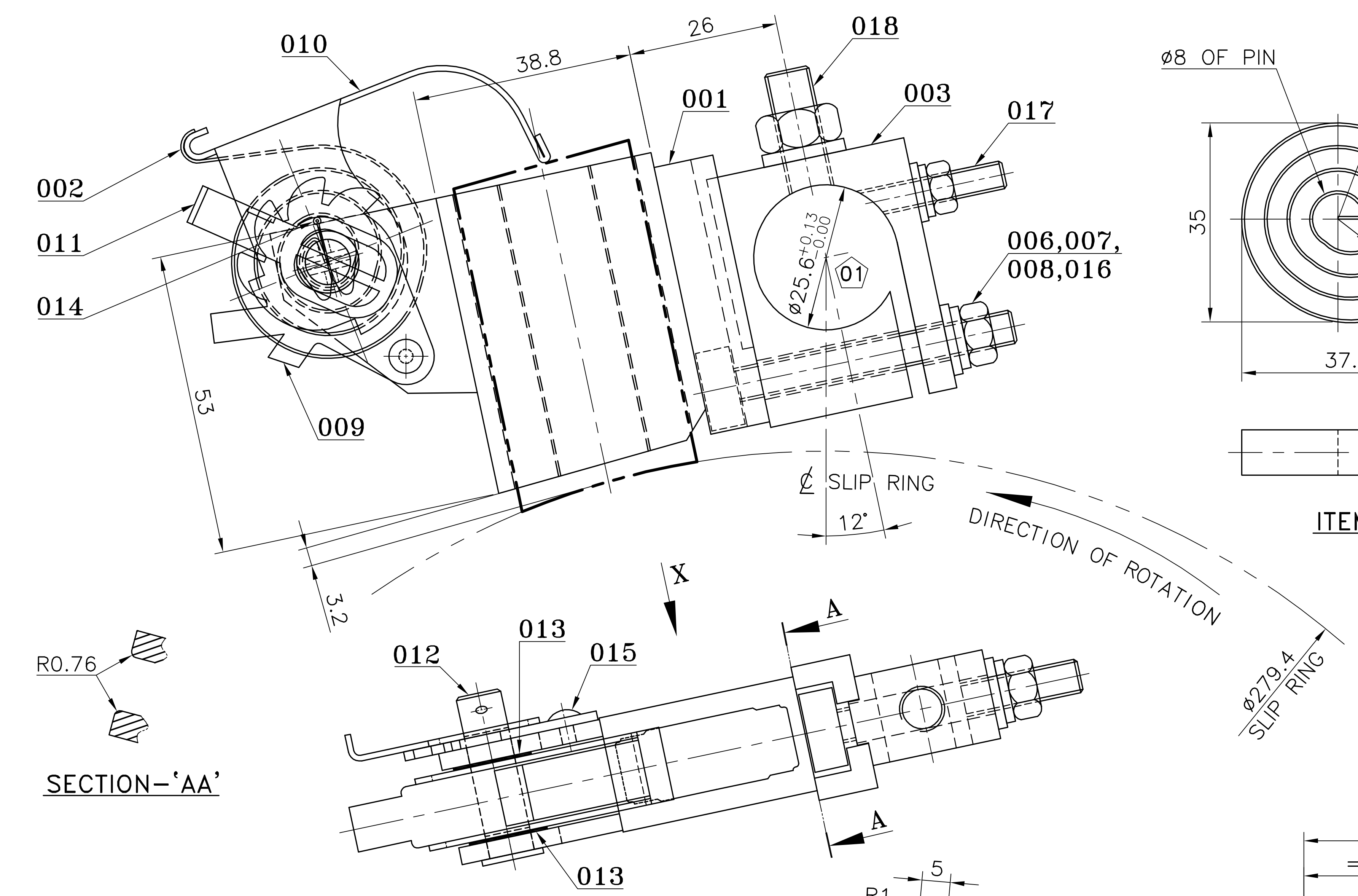

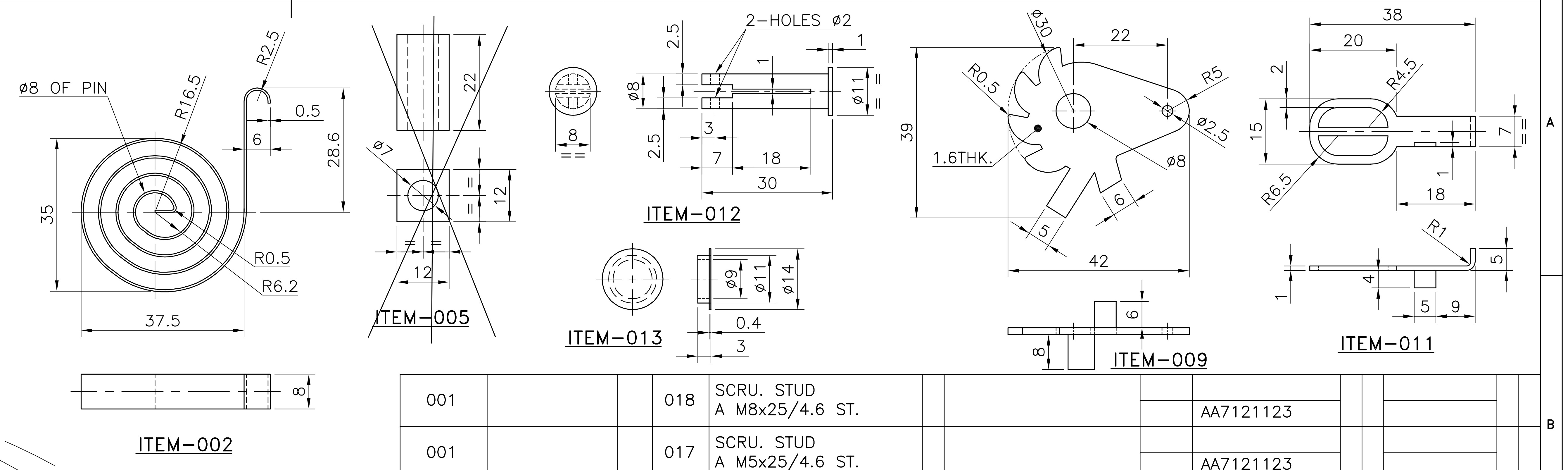

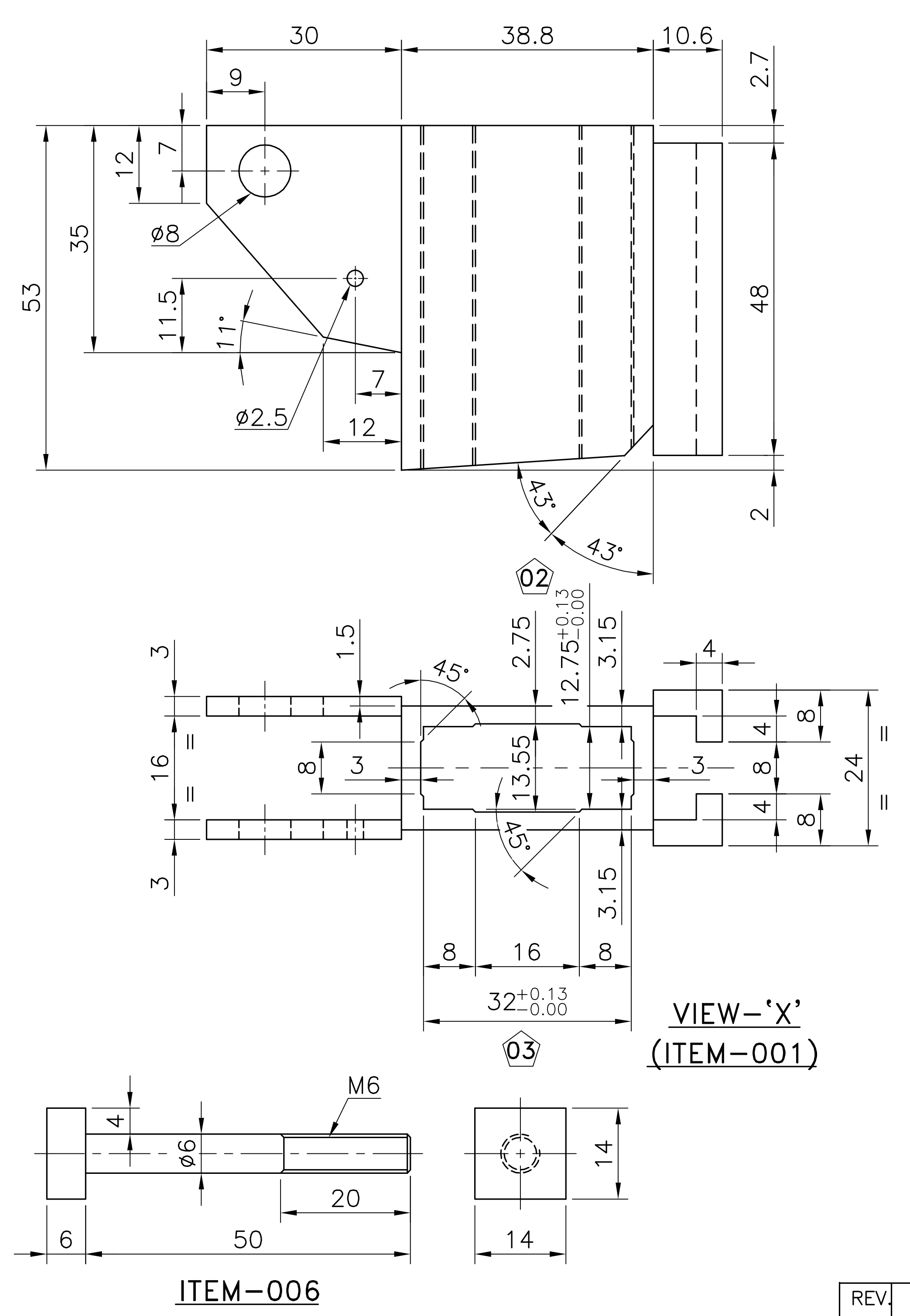

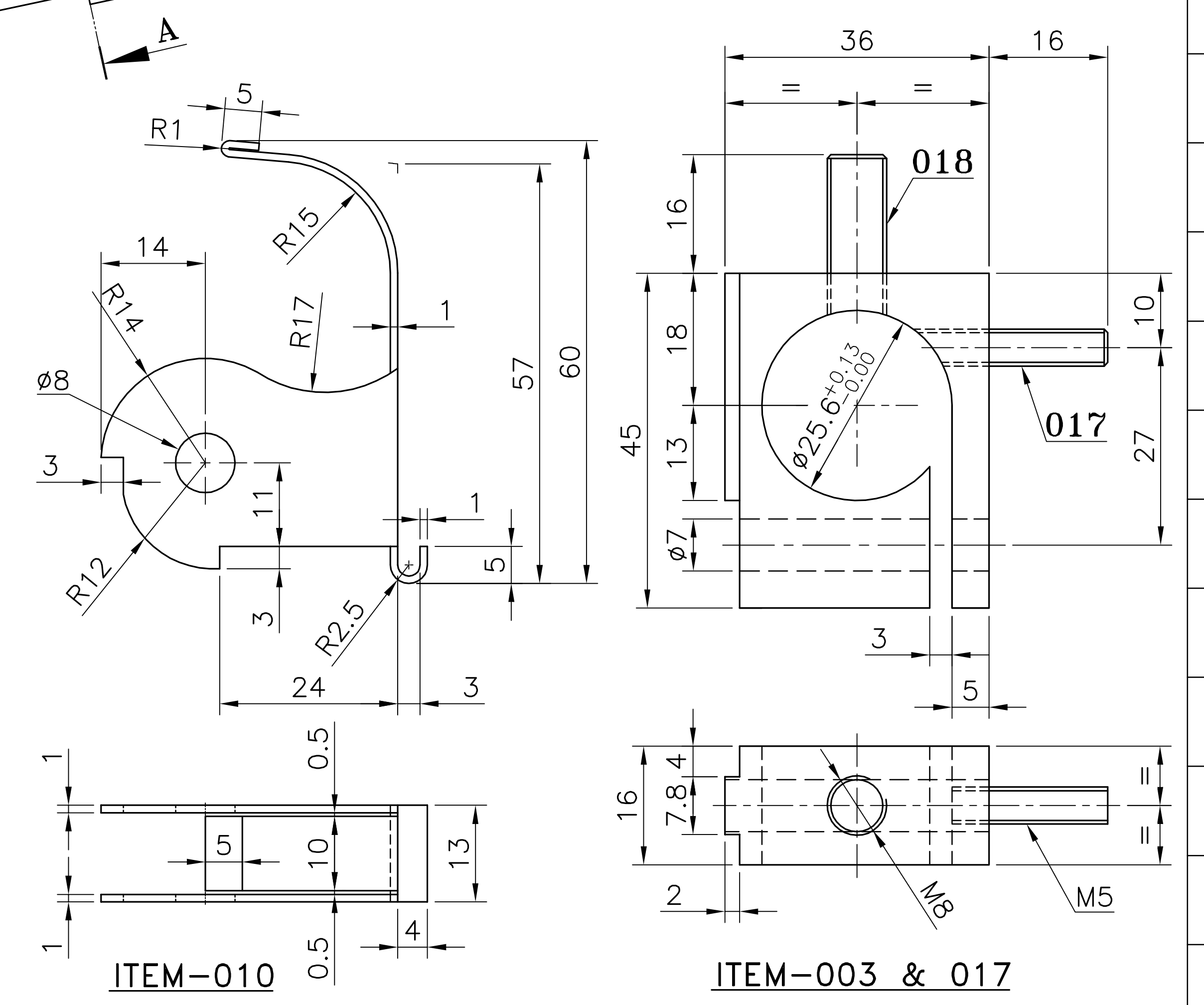

NOTES:-

1. REMOVE ALL SHARP EDGES WITH RADIUS 1.
2. INNER SIDE OF BRUSH POCKET SHOULD BE SMOOTH.
3. SPRING FORCE ON NEW BRUSH POSITION TO BE ADJUSTED ON 3rd NOTCH=1.5KG.±10%.
4. ITEMS 006, 009, 010, 011, 012, 014, 015, 016 & 017 TO BE ZINC PLATED AND PASSIVATED YELLOW TO AA0673603 & AA0673604 WITH PLATING THICKNESS 0.013mm TO 0.015mm.
5. HARDNESS OF SPRING (ITEM 002) 40-45 ROCK WELL.
6. ALL 3 NOS. "⬠" MARKED DIMENSIONS ARE CRITICAL TO QUALITY (CTQ) & SL. NO. OF CTQ DIMENSIONS ARE INSCRIBED IN ⬠ e.g.③.
7. BRASS (ITEM 003) WILL BE SILVER PLATED WITH LAQUOUR FINISH
8. ITEM 007 TO BE PARKERISED TO PROCESS AA0673616.
9. BRAZE STUD ITEM 017 WITH ITEM 003 AND FLUSH TO M/CD SURFACE AS SHOWN.
10. OPEN TOLERANCE FOR ALL DIMS. UNTOLERATED SHALL BE WITHIN ±0.5mm. MAX.
11. **PROVISION OF SECURELY LOCKING BRUSH HOLDER LEVER (ITEM 010) WITH ITEM 009 SHOULD BE EFFECTIVELY WORKING. (WHEN STRETCHED IN REVERSE DIRECTION).**

VAR00	REMARKS	VAR. NO.	ITEM NO.	DESCRIPTION	STD	DRAWING NO.	IT.NO. / VAR.	MATL. CODE / MATL. SPCN.	A/C	UNIT	UNIT WT. / QTY.	GS	ZONE
001			018	SCRU. STUD A M8x25/4.6 ST.				AA7121123					
001			017	SCRU. STUD A M5x25/4.6 ST.				AA7121123					
001			016	NUT HEX. A M6-8.8				AA7151115016 / AA7151115		KG.	0.002		
001			015	RIVET				AA12114					
001			014	SPLIT PIN				AA7171089					
002			013	BUSH ø14x3				NYLON GR.-66					
001			012	BARREL ø11x30				AA12114					
001			011	ADJUSTABLE LEVER 1THK.x15x38				AA10155					
001			010	PRESSURE FINGER 1THK.x60x95				AA10115					
001			009	RACHET 8.4-ST.				AA10115					
001			008	WASHER MCD. 6.4-ST.				AA7161001048 / AA7161001		KG.	0.001		
001			007	WASHER SPRING LOCK SC. A 6-ST.				AA7164001049 / AA7164001		KG.	0.0008		
001			006	SQ. HD. BOLT				IS:1367(P3)					
~~001~~			~~005~~	~~BLOCK 12THK.x12x22~~				~~IS:1367(P3)~~					
~~001~~			~~004~~	~~PLATE 1THK.x16x34~~				~~AA12114~~					
001			003	C-TYPE CLAMP				AA12114					
001			002	BRUSH SPRING 0.5THK.x8x295				STAINLESS STEEL / AISI-304					
001			001	BRUSH HOLDER BODY				IS:1264-1997 / GR. DCB1/DCB2					

28 → CARD TYPE-3 | 28 → CARD TYPE-1 | 28 → CARD TYPE-2

ADDITIONAL INFORMATION

STATUS OF DRAWING

DISTRIBUTION OF PRINTS
TME -1 TAM -3
TNX -1

उत्पाद का प्रकार या ग्राहक/परियोजना का नाम
TYPE OF PRODUCT OR NAME OF CUSTOMER/PROJECT

TRACTION ALTERNATOR
TA9906AZ

बीएचईएल
भारत हेवी इलेक्ट्रिकल्स लिमिटेड भोपाल
BHARAT HEAVY ELECTRICALS LTD. BHOPAL

	नाम/NAME	हस्ता./SIGN.	दिनांक/DATE
बनाया DRN.	S.D.B.	(signature)	25.02.20
जाँचा CKD.	A.T.	(signature)	25.02.20
स्वीकृत APPD.	A.T.	(signature)	25.02.20

वे.रि. की संख्या NO. OF VAR.: 00

विभाग DEPT: TME
कोड CODE: 405
अन.टाल.नाप की श्रेणी UNTOL. DIMS. GR.
अनुपात SCALE: NTS
भार (कि.ग्रा.) WEIGHT (K.G.): –
असे.ड्राइंग का संदर्भ REF. TO ASSY. DRG.: –
मद क्र. ITEM NO.: –
मद संख्या NO. OF ITEM: 018

शीर्षक/TITLE: **BRUSH HOLDER ASSY.**

ड्राइंग क्र./DRAWING NO.: **2 430 20 76 201**
पुन. REV.: 04
पृष्ठ क्र./SHT. NO.01 | पृष्ठों की संख्या/NO. OF SHT.01

REV.	DATE				
04	21.8.20	ALTERED SDB / CHECKED AT / APPROVED AT	NOTE-3 MODIFIED AND NOTE-11 ADDED.		
03	26.11.20	ALTERED SDB / CHECKED AT / APPROVED AT	VIEW OF ITEM 001 & 006 ADDED. DIMS. 28,16,3,30,38.8, 10.6,22,12.75 & ø7 WERE 26,14,1.6,28,36,12,15,15.75 & ø6. ITEM 018 ADDED & 017 MODIFIED. ITEMS 004 & 005 DELETED. ITEM 003 (C-TYPE CLAMP) MODIFIED. NOTES-3, 7 & 10 MODIFIED.		
02	04.6.20	ALTERED SDB / CHECKED AT / APPROVED AT	DIM. 15.75, 24 & 4 WERE 12.75, 36 & 10. IN ITEM 002, DIM. 12 WAS 8. IN ITEM 012, DIMS. 22 & 34 WERE 18 & 30. IN ITEM 010 DIMS. 11 & 14 WERE 10 & 13.		

A2