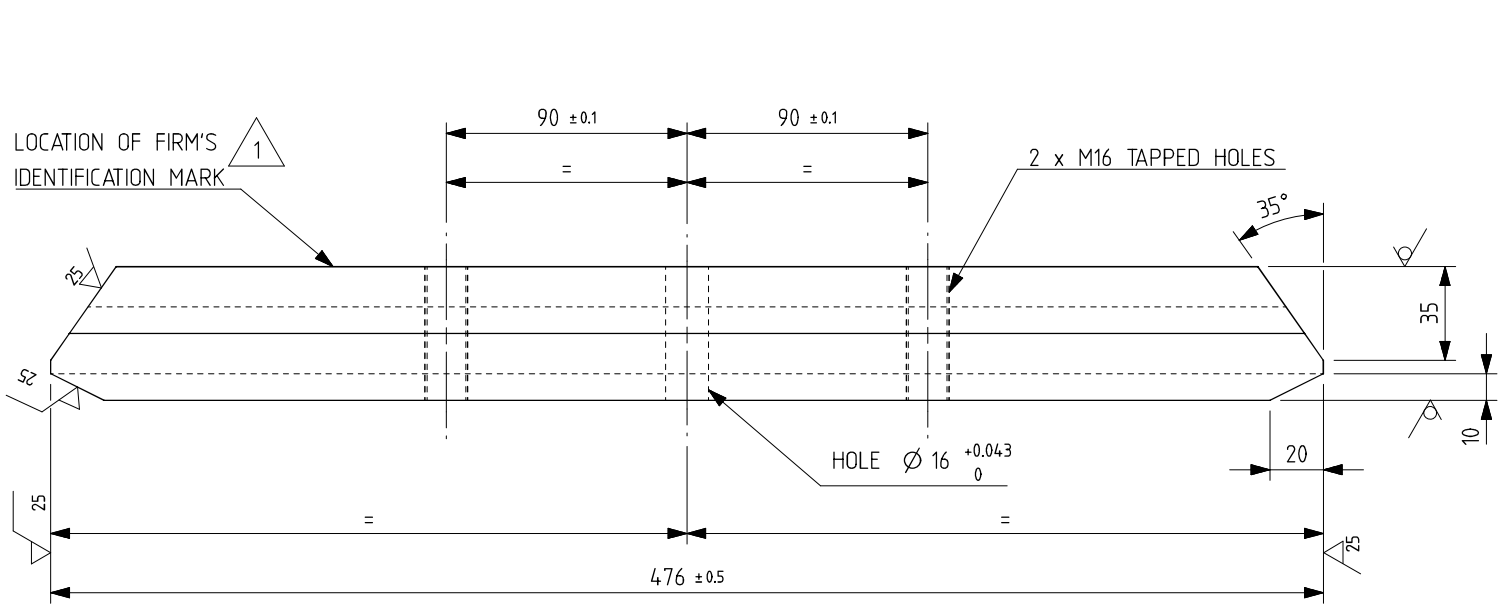

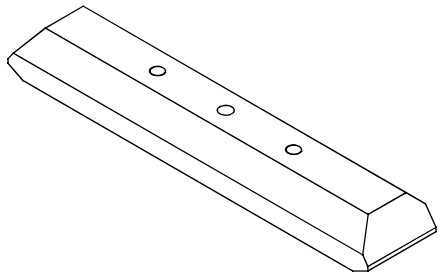

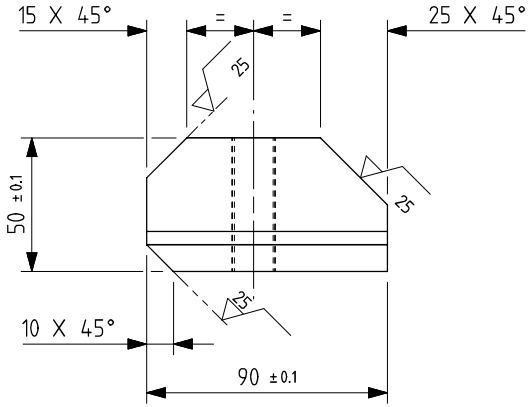

C&D NO: 5711/317
QTY/TM: 2 NOS

NOTE:

1. SHARP EDGES TO BE REMOVED.
2. IS SPECIFICATION REFERRED HEREIN SHALL MEAN THE LATEST VERSION THEREOF.

धातु–वेल्डन चिन्ह भा. मा. : 813 / अ. मा. सं. :2553 WELDING SYMBOLS TO IS:813 / ISO:2553	अनिर्दिष्ट सद्य – सीमा भा. मा. : 2102 / अ. मा. सं. : 2768 UNSPECIFIED TOLEARANCE TO IS : 2102 / ISO : 2768												TOL. CLS.
	पदांक GRADE NO.	सं1 N1	सं2 N2	सं3 N3	सं4 N4	सं5 N5	सं6 N6	सं7 N7	सं8 N8	सं9 N9	सं10 N10	सं11 N11	सं12 N12
	Rz	0.16-0.3	0.5-0.7	0.9-1.1	1.5-2.0	2.5-3.8	5.0-6.3	9.0-12	14-25	30-40	50-63	75-100	160-250
सतह रुक्षता का मान भा. मा. : 3073 / अ. मा. सं. 1302 SURFACE ROUGHNESS VALUE TO IS:3073 / ISO:1302	Ra µm	0.025	0.05	0.1	0.2	0.4	0.8	1.6	3.2	6.3	12.5	25	50
	चिन्ह SYMBOL												

परिवर्तन संख्या ALT. NO.	प्राधिकार AUTHY	वर्णन DESCRIPTION	दिनांकित आद्यक्षर DATED INITIAL
4	DY.CEE/TMD	CLW SPECN. ALTERED WITH MATERIAL GRADE	17-10-16
3	DY.CEE/TMD	CLW SPECN . ADDED	21-07-11
2		REDRAWN IN NX WITH 3RD ANGLE PROJECTION	13-11-09
1	DY.CEE/TMD	NOTE 2 ADDED AND LOCATION OF FIRM'S IDENTIFICATION MARK PROVIDED.	04.10.04

अभिकल्पित DGN	
जाँचा व.अ.अ. CHD SSE	Ravindra Kumar
समीक्षित स.वि.अ. / व.वि.अ. REVIEWED AEE / SEE	RISHAP CHAUDHARI
अनुमोदित उ.मु.वि.अ. APPROVED DYCEE	RANJAN KUMAR PRAMANIK
दिनांक DATE	07-08-20
रैखिक अनुपात SCALE	1:2
संदर्भ / REF.	3EJM845014 ALT.-

चितरंजन रेलइंजन कारखाना
CHITTARANJAN LOCOMOTIVE WORKS, INDIA

पदार्थ MATL	STEEL	प्रति भार कि. ग्रा. WT. EACH IN KG	
विशिष्ट SPECN	4TMS.096.055 ALT. 5 OR LATEST		3 4
वर्णन DESCRIPTION	ACCESSORY BAR		
आरेखण संख्या DRAWING NO.	3TWD.096.096		
परिवर्तन संख्या ALTERATION NO.	4	पर्ण SHEET	1 OF 1
A3			

3TWD.096.096

Signature Not Verified
Digitally signed by Ravindra Kumar
Date: 2022.08.16 12:55:09 IST
Reason: IREPS-CRIS
Location: New Delhi

This document/drawing was prepared by or on behalf of CLW and the copyright belongs to CLW. Reproduction in whole or in part requires prior written consent of CLW. As the drawing incorporates confidential information of CLW its disclosure to third parties also requires CLW's prior written consent.

REDRAWN BY TCS

FIRST ANGLE PROJECTION

(ALL DIMENSIONS ARE IN mm)

DRG. NO. 3445316405 6

TOOL LIST		
IT. NO.	TOOL NO.	DESCRIPTION
001	1605011	DRILL PLATE FOR ALL HOLES

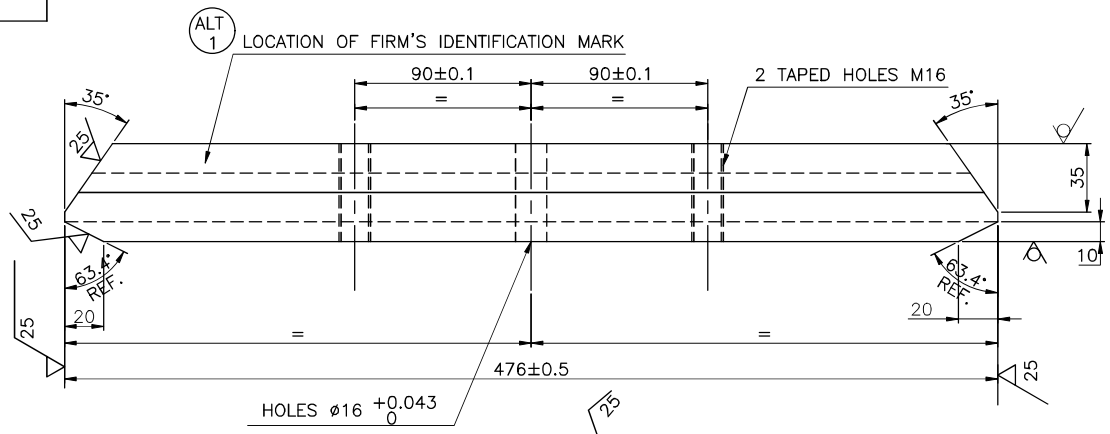

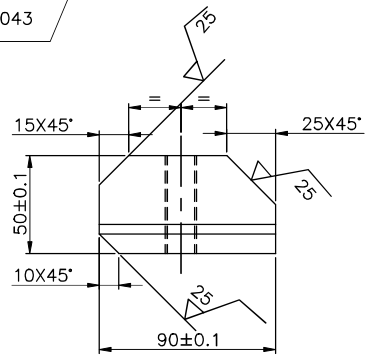

NOTES:–

1. SHARP EDGES TO BE REMOVED.
2. (ALT 1) IS SPECIFICATION REFERRED HERE IN SHALL MEAN THE LATEST VERSION THERE OF.

SURFACE ROUGHNESS VALUE TO IS : 3073' 67	GRADE NUMBER	N1	N2	N3	N4	N5	N6	N7	N8	N9	N10	N11	N12
	Ra µ m	0.025	0.05	0.1	0.2	0.4	0.8	1.6	3.2	6.3	12.5	25	50
	SYMBOL	√	√	√	√	√	√	√	√	√	√	√	~

VAR 00	REMARKS	VAR NO.	ITEM NO.	DESCRIPTION	STD.	DRAWING NO.	IT.NO.	MATL. CODE	A	UNIT	UNIT WT.	GS	ZONE
	R/ WT = 17.00		001	ACCESSORY BAR				TM11495		Kg	14.20		
							VAR	MATL. SPCN.	C		QTY.		

CARD TYPE 3 — 28 | 28 — CARD TYPE 1 | 28 — CARD TYPE 2

ADDITIONAL INFORMATION
3TWD.096.096, ALT.04

STATUS OF DRAWING

DISTRIBUTION OF PRINTS
TME– 1 TXM– 3
TNX– 1

TYPE OF PRODUCT OR NAME OF CUSTOMER/PROJECT: 6FRA-6068

BHARAT HEAVY ELECTRICALS LTD. BHOPAL

	NAME	SIGN	DATE
DRN	ASWINI J.	–SD–	08.09.10
CKD	D.K.	–SD–	08.09.10
APPD	A.S.	–SD–	08.09.10

NO. OF VAR.

DEPT.	GRADE OF UN.TOL.	SCALE	WEIGHT(K.G.)	REF.TO ASSY.DRG.	ITEM NO.	NO.OF ITEM
T.M.E. CODE 405	'M' TM20079	NTS		04453164052	014	001

TITLE: **ACCESSORY BAR**

DRAWING NO. 3 445 31 64 056 — REV. 04

SHT. NO. 01 — NO. OF SHT. 01

SIGN. & DATE

REV.	DATE		
04	31.12.22	ALTERED	SDB
		CHECKED	ABHIJIT
		APPD.	RC

IN ADDITIONAL INFORMATION COLUMN, ALTERNATION OF CLW DRAWING 04 WAS 03.

INVENTORY NO.

REV.	DATE		
03	29.07.21	ALTERED	SDB
		CHECKED	ABHIJIT
		APPD.	ABHIJIT

IN BOM SPEC. OF ITEM 001 MODIFIED.

REV.	DATE		
02	28.03.17	ALTERED	VK
		CHECKED	ABSH.
		APPD.	AS

ANGLE 63.4° ADDED. IN BOM WT. 14.2 WAS 12.00 KG.

REV.	DATE		
01	16.06.11	ALTERED	AKJ
		CHECKED	DK
		APPD.	SA

TOOL LIST WAS NOT ON.

(TCM–334)

REF. DRG. NO.

THE INFORMATION ON THIS DOCUMENT IS THE PROPERTY OF BHARAT HEAVY ELECTRICALS LIMITED. IT MUST NOT BE USED DIRECTLY OR INDIRECTLY IN ANY WAY DETRIMENTAL TO THE INTEREST OF THE COMPANY.

A3 SIZE