FIRST ANGLE PROJECTION

(ALL DIMENSIONS ARE IN mm)

DRG. NO. 24451509001

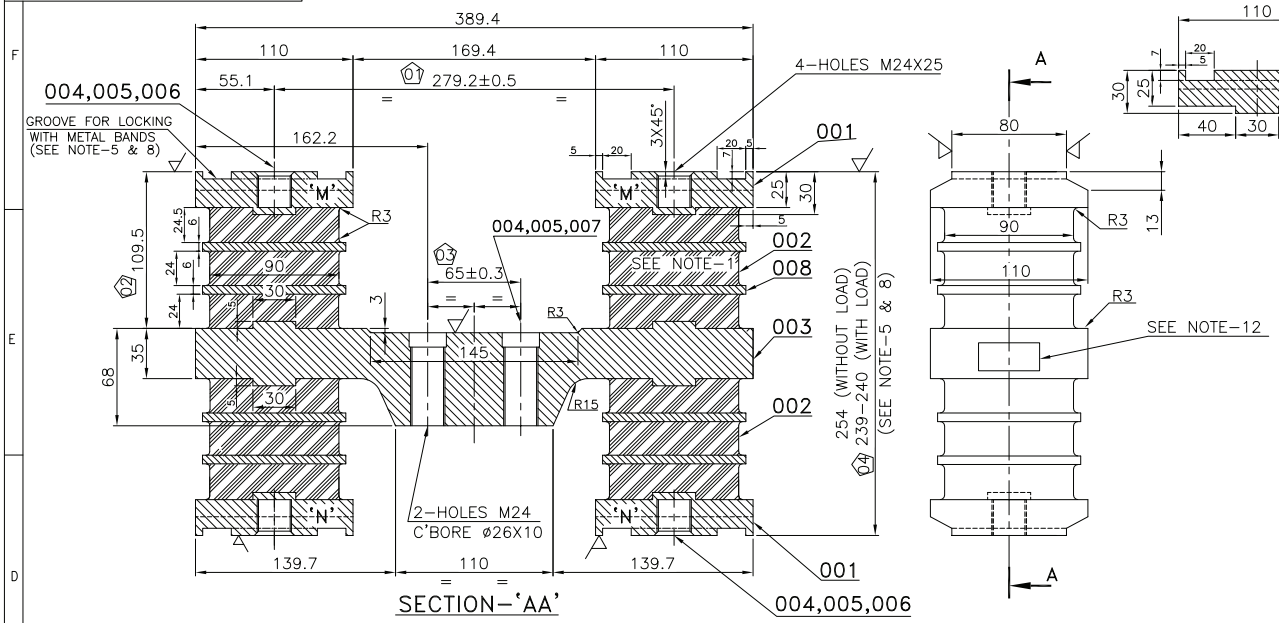

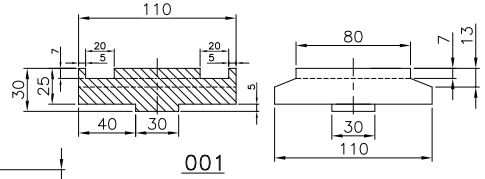

SPECIFICATION.

SYNTHETIC RUBBER COATING		CHLOROPRENE RUBBER PAINT COATED TWICE
SPRING CONSTANT (COMPRESSION)		δ (4600 KGF)− δ (2800 KGF) =7.9±0.8MM
TENSILE TEST	TENSILE STRENGTH	MINIMUM. 150KGF/CM²
	ELONGATION.	MINIMUM. 400%
PERMANENT SET. (25% COMPRESSION)		MAXIMUM 25%
HARDNESS SHORE 'A'		50±5

NOTES:−

1. FOLLOWING MARKING TO BE MOULDED ON THE FLEXING ELEMENT, RUBBER ITEM 002 IN THE RAISED LETTERS OF HT 0.5MM
   (A) MANUFACTURERS NAME OR MARK
   (b) MONTH/ YEAR OF MANUFACTURE.
2. VARIATION OF TOLERANCE = 254±1.8 MM (MEAN) (254±0.9 MM)
3. IT. 001 TO 003 & 008 TO BE BONDED TOGETHER.
4. BOND/SHEAR TEST:− CLAMP STEEL END PLATE 'N' IN A FIXTURE VERTICALLY, APPLY VERTICAL LOAD ON THE TOP 'M'. DEFLECT THE MOULDING LATERALLY BY 35 MM THREE TIMES AT ROOM TEMPERATURE. RUBBER DAMPER SHOULD NOT SHOW PEELING OFF OR ANY OTHER DEFECT AND NO FAILURE OF BOND SHOULD BE VISIBLE.
5. THE SANDWICH UNIT SHALL BE SUITABLE COMPRESSED TO 239−240MM HEIGHT AND LOCKED WITH METAL BANDS.
6. ALL SHARP EDGES TO BE CHAMFERED TO 1X45°.
7. FINE FINISH ALL OVER.
8. METAL BANDS USED FOR LOCKING THE SANDWICH UNIT SHOULD NOT PROJECT ABOVE THE GROOVE.
9. ALL 04 NOS. "⬠" MARKED DIMENSIONS ARE CRITICAL TO QUALITY (CTQ) & SL. NO. OF CTQ DIMENSIONS ARE INSCRIBED IN ⬠ e.g. 04.
10. 100% NOSE SUSPENSION ASSY. TO BE CHECKED FOR DIMENSIONS 279.2±0.5, 65±0.3 AND 239−240 BY USING SUITABLE GAUGE.
11. PAINTING COLOUR: BLACK.
12. 'IM3302' TO BE PUNCHED AT THE LOCATION SHOWN.

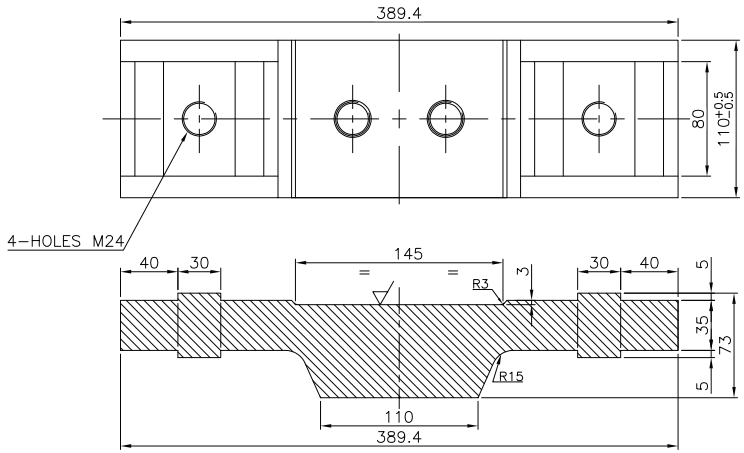

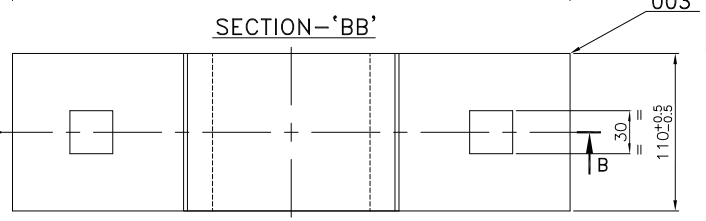

TOOL LIST		
IT. NO.	TOOL NO.	DESCRIPTION
	1607709	NOSE SUSPENSION ASSY. CHECKING TEMPLATE

IT. NO.	VAR00	REMARKS	VAR. NO.	ITEM NO.	DESCRIPTION	STD	DRAWING NO.	IT.NO. / VAR.	MATL. CODE / MATL. SPCN.	UNIT	UNIT WT. / QTY.	LS	ZONE
008				008	PLATE 6x100x100				AA10108	KG	0.64		
002				007	BOLT HEX. HD. M24x170−P8.8				AA7111124170 / AA7111124	KG	0.63		
006				006	WASHER SPRING LOCK SC A 24−ST.				AA7164001103 / AA7164001	KG	0.026		
006				005	WASHER MCD. 25−ST.				AA7161001102 / AA7161001	KG	0.032		
004				004	BOLT HEX. HD. M24x90−P8.8				AA7111124138 / AA7111124	KG	0.42		
001				003	PLATE 80x390x110				AA10108	KG	16.32		
012				002	DAMPER (MOULDING)				JIS−K6386 A11		2.2		
004				001	PLATE 36x110x110				AA10108	KG	2.4		

28 → CARD TYPE-3 | 28 → CARD TYPE-1 | 28 → CARD TYPE-2

REV.	DATE		
08	05.07.22	ALTERED A.J. / CHECKED A.S. / APPROVED A.S.	ZONE: NOTE−12 ADDED.
07	07.09.20	ALTERED A.JHARIA / CHECKED A.S. / APPROVED A.S.	ZONE: NOTE−10 UPDATED TO INCLUDE DIMS. & IN SPEC. TABLE, SHEARING STRAIN DELETED. NOTE−11 ADDED.
06	24.09.19	ALTERED A.JHARIA / CHECKED A.S. / APPROVED A.S.	ZONE: ITS.001 & 003 DETAILED VIEW ADDED.
05	07.09.19	ALTERED A.JHARIA / CHECKED A.S. / APPROVED A.S.	ZONE: NOTE−8 & 9 ADDED. DIM. 65±0.3 WAS 65. NOTE−8 TO 10 ADDED. IN SEC.−AA, TOLERANCE OF ±0.3 ADDED ON DIM 65 (E−7) AND DIM. 239−240 WAS 239.5. IN NOTE−6 CH. 1X45 DEG. WAS 0.2−0.3X45 DEG. TOOL LIST ADDED.
04	08.03.19	ALTERED A.JHARIA / CHECKED A.S. / APPROVED A.S.	ZONE: IN BOM, IT.004 LG. 90 WAS 95, IT.003 TK. 75 WAS 80 & WIDTH 110 WAS 125, IT.001 TK. 36 WAS 30 & WIDTH 110 WAS 125, IT.008 LG. 100 WAS 110 & WIDTH 100 WAS 120. IN SEC.−AA DIM 254, 90, 30, 25, 7, 5 & 109.5 WERE 260, 100, 28, 23, 5, 10 & 112.5 AND DEPTH OF M24 HOLES 25 WAS 30 & CH.3X45° ADDED. IT.001 DIM.110 WAS 120 & IT.002 DIM. 90 WAS 114.
03	20.12.18	ALTERED A.JHARIA / CHECKED A.S. / APPROVED A.S.	ZONE: IN BOM, IT.008 ADDED & IT.002 QTY. 012 WAS 004. IN IT.001, DIM. 23 WAS 25 AND DIM. 30 & 28 ADDED (SEC.−AA), VIEW MODIFIED. IN IT.003, DIM. 30 & 5 ADDED AND R15 WAS R10. IN SPECIFICATION TABLE, SHORE HARDNESS ADDED AND IN NOTE−4, DEFLECTION 35 MM WAS 95 MM.
02	17.02.18	ALTERED A.JHARIA / CHECKED A.S. / APPROVED A.S.	ZONE: IN 2 HOLES M24 C'BORE ø26X10 ADDED & IN BOM IT.004 BOLT LENGTH 95 WAS 90.
01	02.01.18	ALTERED A.JHARIA / CHECKED A.S. / APPROVED A.S.	ZONE: DRG. UPDATED AS PER ICF DRG. DMU/DPC/SS−0−2−002.

ADDITIONAL INFORMATION

STATUS OF DRAWING

DISTRIBUTION OF PRINTS
TME−1
TXM−3
TNX−1

TYPE OF PRODUCT OR NAME OF CUSTOMER/PROJECT: IM3301BZ/IM3302AZ

BHARAT HEAVY ELECTRICALS LTD. BHOPAL

	NAME	SIGN.	DATE	NO. OF VAR.
DRN.	S.D.B.		24.08.17	00
CKD.	A.S.		24.08.17	
APPD.	A.S.		24.08.17	

DEPT.	GRADE OF UN. TOL.		SCALE	WEIGHT (K.G.)	REF. TO ASSY.	ITEM NO.	NO. OF ITEM
TME	DIM. C/M/F		NTS	−−	04451009001	046	008
CODE. 405	AA0230208						

TITLE: NOSE SUSPENSION ASSY.

DRAWING NO. 24451509001 REV. 08

SHT NO. 01 No.OF SHT 01

THE INFORMATION ON THIS DOCUMENT IS THE PROPERTY OF BHARAT HEAVY ELECTRICALS LIMITED. IT MUST NOT BE USED DIRECTLY OR INDIRECTLY IN ANY WAY DETRIMENTAL TO THE INTEREST OF THE COMPANY.

REF. DRG. NO. | SIGN. & DATE | INVENTORY NO.

1154136/2022/HEP-TXM20500

16/34